NOTE: ALL MEASUREMENTS ARE IN FEET

DOT/AAR Inventory #: 154511L

Location: Douglas Co., In Newman, IL

Lat/Long: 39º 47' 56"/-87º 59' 8"

Railroad Milepost - Line: 225.36-C

Crossing Angle (Deg.): 85

Crossing Width (By Track): 32.0, 45.0 (1 to 2)

Number of Tracks: 2

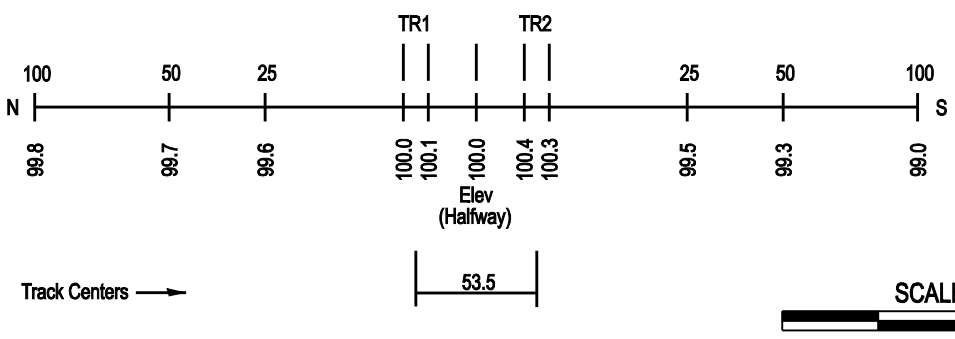

ROAD PROFILE

SCALE IN FEET

100 50 0 100