Exhibit 3.2.3

Patrick Engineering 138 kV Transmission Line Conceptual Design and Project Estimate

Taylorville 138kV Transmission Line

Conceptual Design & Project Estimate

Prepared For

December 18, 2009

Prepared By
Patrick Engineering Inc.

Project # 20903.038

300 West Edwards Street, Suite 200, Springfield, Illinois 62704 | 800.799.7050 | patrickengineering.com

Table of Contents

INTRODUCTION	1
PROJECT DESCRIPTION	1
ASSUMPTIONS	1
CONCEPTUAL LINE DESIGN	2
FINAL TRANSMISSION LINE ENGINEERING	3
SUBSTATION ENGINEERING	4
AERIAL SURVEY	4
SITE SURVEY	5
GEOTECHNICAL SERVICES	5
MATERIAL SUPPLIERS	6
CONSTRUCTION SERVICES	6
EPC PROJECT MANAGEMENT	7
COST SUMMARY	7
CONCLUSION	8

Appendices

Conceptual Line Design	A
Substation Engineering	B
Aerial Survey	C
Site Survey	D
Geotechnical Services	E
Material Suppliers	F
Construction	G
EPC Project Management	H

Taylorville 138kV Transmission Line
Conceptual Design & Project Estimate

INTRODUCTION

Patrick Energy Services (Patrick) conducted a preliminary engineering study and developed a conceptual design for the proposed route of a 138kV electrical transmission line extending from the Taylorville Energy Center to the local transmission utility's existing substation along N1400 East Road. This report includes a general description of the project, the assumptions made and a detailed description of the preliminary design developed for this project. The report also includes an opinion of probable cost for the project identifiying specific subcontractor activities and the associated costs for each.

PROJECT DESCRIPTION

The purpose of this report is to communicate a conceptual design and provide opinion of probable costs to Tenaska for the proposed 138kV electrical transmission line that connects the Taylorville Energy Center and a local transmission utility's Substation. The route of the transmission line will cross over privately owned properties along a road right of way. The line is designed to accommodate a single three phase circuit that terminates at a distribution substation. This report includes a +/- 30% cost estimate for the complete project.

ASSUMPTIONS

Some notable assumptions were made during the preliminary engineering of this line. Descriptions of these are listed here:

- Conceptual Design – The contents of this report are for conceptual and budgetary purposes only and are not intended to be used for final design purposes.
- RUS, NESC, and IEEE Standards – Structure type, conductor and shield wire types as well as stringing strength, ruling spans and electrical clearances conform to standard electrical codes.
- Land Acquisition – Land Acquisition was not included as part of this project. Tenaska will be providing land acquisition services for both permanent and construction services. A value of $221 per rod was supplied by Tenaska for 100ft wide right of way and multiplied by the 1.25 mile line to arrive at lump sum price located in the project cost summary.
- Wetland Delineation – Tenaska has already preformed some wetland studies in the region for other projects and will perform similar studies for transmission line and substation activities.

CONCEPTUAL LINE DESIGN

Patrick performed the conceptual line design with Tenaska's direction. Patrick created plan and profile drawings which are located in Appendix A. Patrick designed single pole wood structures to support the single circuit line. The tangent structure utilizes three post insulators and a shield wire suspension shoe.

The structures were modeled in Power Line Systems' PLS Pole, a design software to design poles and attach equipment that can later be placed in a working model for ultimate design purposes. The poles were designed to a length of 75 feet with 9.5 feet embedded below ground. For the tangent structure, the conductor post insulators extend approximately 5.5 feet from the center of the pole. The shield wire is supported by a suspension shoe. For the dead end structure strain insulators are used to support the conductors. The dead end structures are also supported using guy wires for structure stability.

In order to select a conductor, Patrick performed a three phase power equation to calculate the ampacity of the line to ensure it would be sufficient for Tenaska's needs. This calculation can be seen in Appendix A. The conductor selected is known as "Hawk", which is a 477 Kcmil ACSR conductor. The conductor information can also be found in Appendix A. This appendix describes the physical attributes of the conductor. As part of this study Patrick investigated the blowout of this conductor to determine the right of way width needed.

The shield wire proposed is a 24 fiber optical ground wire. The shield wire attribute information can be found in Appendix F. Patrick recommends the use of a fiber optic ground wire which has excess bandwidth capacity to accommodate future increasesin demand for communication bandwidth on transmission lines.

The transmission line was modeled in PLS CADD, which utilizes a basic digital elevation model. The siting for this line was done in accordance with Tenaska's instruction, along road N 1400 East Road. Patrick recommends placing structures in the road right of way to attempt to keep costs down and only negotiate with one property owner. A more detailed model would be obtained by aerial survey which would typically be used to produce a final design. Elevation and global plane information was used to create a three dimensional map where the PLS pole structures are placed. The aerial maps were then viewed and structures were moved along the decided path to avoid existing obstacles. The right of way for this line was calculated and included in Appendix A. The minimum calculated value was smaller than industry standard for 138kV line so the industry standard of 50 ft each way was used.

Patrick visited the Taylorville site to verify preliminary structure locations and document potential conflicts. Patrick identified some existing distribution line in the current proposed alignment of the transmission line. This line will be attached to the 138kV structures as under build. The current distribution line owner would have to approve of this action before design is finalized. After the design was modified to avoid conflicts the pole locations were confirmed, the conductors were placed into the model and poles were designed to satisfy ground clearance requirements. In a final engineering model, load reactions will be passed on to a material

supplier for design and fabrication. Conductors were strung to a tension to meet NESC ground clearance. Ground clearance in the model is 23 feet from bottom phase to ground. This number was taken from NESC 2007 Table 232-1 Verticals clearance of wires, conductors, and cables above ground, roadway, rail, or water surfaces which can be found in Appendix A. NESC 2007 Table 232-1 specified minimum ground clearance of 20.6 feet which Patrick rounded up and added an additional two foot buffer per common industry practice.

The line was modeled using direct embedded poles and a structure check was performed in the PLS CADD model to determine the class (strength) of pole. The depth of embedment is calculated as 10% of the total length of the pole plus an additional two feet per standard industry practice. A section view of a typical tangent structure is included in Appendix A. The dead end structures will be similar to the tangent structures with the major difference being the insulator type and the necessary structural guys. For direct embedded tangent poles geotechnical studies are not usually necessary unless inferior conditions are encountered.

FINAL TRANSMISSION LINE ENGINEERING

The final transmission line engineering will be done in accordance with Tenaska standards and/or applicable codes such as NESC and ASCE. This work will expand on the conceptual design discussed above and develop the complete and final transmission line design. The design will include such items as:

- Route verification
- Survey coordination
- Structure placement
- Structure loading
- Conductor stringing
- Material selection
- Permit coordination
- Construction coordination
- Project close out including as-builts

Engineering deliverables would include:

- Stringing charts
- Staking reports
- Specifications
    - Material procurement
    - Construction
    - Geotechnical
- Bill of materials
- Drawings
    - Structure design

- Plan and profile
- Hardware assemblies

Patrick has developed an estimate to complete this design. A spreadsheet outlining Patrick's anticipated hours to be spent on final engineering activities for this project can be found in Appendix A. This estimate incorporates all tasks and deliverables mentioned above as well as the substation engineering activities described later in this report. It also includes time and expenses for meeting attendance, phone conferences, site visits, and contacting and supporting other subcontractors. Anticipated site visits would include: initial route walk down, follow up review of areas that require special considerations, and verification of staking locations. The total project cost for final transmission line engineering can be found in the cost summary of this document.

SUBSTATION ENGINEERING

The substation engineering will be done in accordance with Tenaska standards and/or applicable codes such as NESC, ASCE, and IEEE. The design will include items such as:

- Substation layout
- Equipment selection
- Protection and controls
- Foundation design
- Specifications
  - Material procurement
  - Construction
  - Geotechnical
- Drawings
  - Structure design
  - Site plan and profile
  - Conduit plan and profile

Patrick has developed a conceptual design and estimate to complete this design. Appendix B contains one line and plan view drawings showing probable equipment and its location. A spreadsheet outlining Patrick's anticipated hours to be spent on substation engineering activities for this project can also be found in Appendix B. This estimate incorporates all tasks and deliverables mentioned above as well as the final transmission line engineering activities described previously in this report.

AERIAL SURVEY

Various companies were contacted to provide estimates for aerial survey and topographic mapping activities for the final engineering. An aerial survey company will provide color digital imagery of line area and data files for PLS model production. The current survey map

used for PLS CADD model is accurate enough for proposals but the data is spread out and of a general variety. It is important that the information used for final design is as accurate as possible because small discrepancies can result in expensive redesign. Two different methods to produce this survey information are Photogrammetry and Lidar.

Photogrammetry is a method of obtaining topographic information using aerial photograph to develop terrain information. Lidar is a traditional method for collecting topographic information using a laser to scan the area to produce point coordinates. Both technologies have the ability to develop elevation contours in one foot intervals. They take the collected data and convert it into a format that can be placed into a PLS CADD model. It also separates out the different ground points into various features such as vegetation, roads, ground features, and bodies of water.

There are many other features that can be collected by aerial survey companies which can be viewed in Appendix C. Some of these features include taking video of the route, taking still pictures of structures in the line area, converting data to a GIS format and many other services. Approximate price for aerial survey can be seen in the cost summary. The final number used was produced using the highest budgetary estimate to be conservative. We feel that the budgetary estimate submitted by the contractor is applicable to this work scope.

SITE SURVEY

Site survey is another necessary activity of design and construction of the final transmission line and substation. Survey activities will include:

- Real-estate investigation
- Survey and determine property lines and owners
- New easement exhibits for the owners
- Verification of aerial obstacles
- Staking activities for the right of way as well as two occasions of construction staking

Various companies were contacted to provide estimates for site survey activities. There is additional information on each survey company in Appendix D. The approximate price for site survey can be seen in the cost summary. To be conservative the highest budgetary estimate was used.

GEOTECHNICAL SERVICES

Various companies were contacted to provide estimates for soil boring and soil lab activities. It is important to perform testing on soils at various locations inside the substation because soil conditions vary from location to location. It is not typical to obtain soil borings for direct imbed poles it is however necessary to obtain soil information for foundations inside the substation. There is additional information on each geotechnical service contractor in Appendix E. The cost of geotechnical services is noted in the cost summary.

MATERIAL SUPPLIERS

Various companies were contacted to provide estimates for total material cost. The materials included in these estimates are conductors, optical shield wire, poles, grounding, insulators, and other hardware. Substation equipment selected for this project includes: disconnect switches, surge arresters, a circuit switcher, a coupling capacitor voltage transformer (CCVT), and a 138/13.8kV 15MVA transformer. This equipment was selected through material suppliers and will need to be confirmed through Tenaska. Tenaska will also have to give direction on pole material type. For this project wood poles or wood pole equivalents, made from steel, can be used. It is important to note that prices of these items will fluctuate, especially for steel poles if they are utilized. Materials also vary by when delivery is needed. Prices in this section reflect a projected value of steel for mid 2010 with an average delivery time, approximately 20 weeks. The most significant cost will be the substation equipment.

The estimated cost is shown in the cost summary. This cost has been divided into two values one for substation and one for transmission materials. Some specific material details can be found in Appendix F. From the estimates we received, one contractor appeared to have the best understanding of the needs for this project. Therefore, their value was used for all hardware. For substation equipment a cost was averaged from suppliers with similar estimates.

CONSTRUCTION SERVICES

Various companies were contacted to provide estimates for construction services. Construction activities are as follows:

- Unloading and storage of materials and equipment
- Framing poles
- Setting poles
- Pull/string conductor
- Subgrade preparation for substation area
- Constructing foundations
- Placing equipment
- Erecting substation structures
- Running conduit
- Restoration of area

Construction costs will differ depending on soil conditions and equipment size. Poor soil conditions will result in larger foundations. Large equipment sizes and heavy equipment will result in larger foundations. Some contractors have broken up estimates for specific activities such as line construction and substation construction while other contractors elected to submit an estimate as a lump sum cost for all construction. Approximate price for construction services can be seen on the cost summary. The cost estimate for construction was separated into

transmission and substation services. Appendix G contains additional information on construction contractors.

EPC PROJECT MANAGEMENT

Project management for this project consists of working with all parties communicating Tenaska's needs. The project manager will purchase the required materials and equipment as well as contract the subcontractors. Project management would also develop and maintain a construction schedule. The estimated total time to complete this project is 18 to 20 months. One of the most critical tasks is ordering the materials and equipment. The lead time on the transformer alone is approximately 8 to 10 months. Other crucial tasks include aerial and site survey because they need to be completed before most of the engineering can be done. The anticipated construction schedule can be seen in Appendix H. The total cost of this activity is a percentage of the various project activities and can be viewed in the project cost summary.

PROJECT COST SUMMARY

	December 2009 Overnight Cost Estimate
Subcontractor Category	Total Price
Land Acquisition	$88,400
Transmission Engineering	$227,000
Substation Engineering	$125,000
Lidar/Aerial Survey	$6,300
Site Survey	$20,000
Geotechnical Services	$6,000
Substation Material	$760,000
Transmission Material	$140,000
Substation Construction	$145,000
Transmission Construction	$220,000
EPC Project Management	$173,800
Total	$1,911,500

CONCLUSION

Patrick has concluded that the route proposed by Tenaska is a viable route. After conducting a conceptual study Patrick has developed a conceptual design that incorporates 24 structures over the 1.25 mile line. Utilizing industry standards, Patrick collected required information and distributed it to various subcontractors in an effort to achieve a budget estimate within 30% accuracy. The approximate cost for this project is estimated at $1,911,500.

The following pages contain the appendices referenced in this section. Any questions about this report or the line design should be directed to Patrick Engineering.

Patrick Engineering Inc.

Christopher P. Dietzler, P.E.
Vice President

Appendix A

Conceptual Line Design

Link, Nicholas

From: Burger, Chris
Sent: Thursday, November 19, 2009 12:11 PM
To: Deckard, Jeff; Link, Nicholas
Subject: FW: ROW costs

Categories: Green Category

Chris Burger, P.E.
Patrick Engineering
(217)525-7050
(630)795-7200

From: Pinapati, Vasu [mailto:vpinapati@TENASKA.com]
Sent: Thursday, November 19, 2009 9:59 AM
To: Burger, Chris
Cc: Gerking, Kyle T.; Tanner, Ronald R.; Brewer, Steven J.
Subject: ROW costs

Chris :

Please use the following ROW costs in the cost estimate while issuing final reports

1) ROW costs of $ 111 /Rod for a width of 50 ft (for potable water & 138 KV ?)
2) ROW costs of $ 221/Rod for a width of 100 ft
3) ROW costs of $ 332/Rod for a width of 150 ft (for 345 KV ?)

Let me know if you have any questions

Vasu

ft

Table 232-1—
Vertical clearance of wires, conductors, and cables above ground, roadway, rail, or water surfaces[25]

(Voltages are phase to ground for effectively grounded circuits and those other circuits where all ground faults are cleared by promptly de-energizing the faulted section, both initially and following subsequent breaker operations. See the definitions section for voltages of other systems.
See Rules 232B1, 232C1a, and 232D4.)

Nature of surface underneath wires, conductors, or cables	Insulated communication conductors and cable; messengers; overhead shield/ surge-protection wires; grounded guys; ungrounded guys exposed to 0 to 300 V [11] [15]; neutral conductors meeting Rule 230E1; supply cables meeting Rule 230C1 (ft)	Noninsulated communication conductors; supply cables of 0 to 750 V meeting Rule 230C2 or 230C3 (ft)	Supply cables over 750 V meeting Rule 230C2 or 230C3; open supply conductors, 0 to 750 V [3]; ungrounded guys exposed to over 300 V to 750 V [14] (ft)	Open supply conductors, over 750 V to 22 kV; ungrounded guys exposed to 750 V to 22 kV [14] (ft)	Trolley and electrified railroad contact conductors and associated span or messenger wires	
					0 to 750 V to ground (ft)	Over 750 V to 22 kV to ground (ft)
Where wires, conductors, or cables cross over or overhang						
1. Track rails of railroads (except electrified railroads using overhead trolley conductors) [2] [16] [22]	23.5	24.0	24.5	26.5	22.0 [4]	22.0 [4]
2. Roads, streets, and other areas subject to truck traffic [23]	15.5	16.0	16.5	18.5	18.0 [5]	20.0 [5]
3. Driveways, parking lots, and alleys [23]	15.5 [7] [13]	16.0 [7] [13]	16.5 [7]	18.5	18.0 [5]	20.0 [5]
4. Other land traversed by vehicles, such as cultivated, grazing, forest, orchards, etc. [24]	15.5	16.0	16.5	18.5	—	—
5. Spaces and ways subject to pedestrians or restricted traffic only [9]	9.5	12.0 [8]	12.5 [8]	14.5	16.0	18.0
6. Water areas not suitable for sailboating or where sailboating is prohibited [21]	14.0	14.5	15.0	17.0	—	—
7. Water areas suitable for sailboating including lakes, ponds, reservoirs, tidal waters, rivers, streams, and canals with an unobstructed surface area of [17] [18] [19] [20] [21]						

Copyright © 2006 IEEE. All rights reserved.

ft

Table 232-1— *(continued)*
Vertical clearance of wires, conductors, and cables above ground, roadway, rail, or water surfaces㉕

(Voltages are phase to ground for effectively grounded circuits and those other circuits where all ground faults are cleared by promptly de-energizing the faulted section, both initially and following subsequent breaker operations. See the definitions section for voltages of other systems.
See Rules 232B1, 232C1a, and 232D4.)

Nature of surface underneath wires, conductors, or cables	Insulated communication conductors and cable; messengers; overhead shield/ surge-protection wires; grounded guys; ungrounded guys exposed to 0 to 300 V ⑪ ⑮; neutral conductors meeting Rule 230E1; supply cables meeting Rule 230C1 (ft)	Noninsulated communication conductors; supply cables of 0 to 750 V meeting Rule 230C2 or 230C3 (ft)	Supply cables over 750 V meeting Rule 230C2 or 230C3; open supply conductors, 0 to 750 V ③; ungrounded guys exposed to over 300 V to 750 V ⑭ (ft)	Open supply conductors, over 750 V to 22 kV; ungrounded guys exposed to 750 V to 22 kV ⑭ (ft)	Trolley and electrified railroad contact conductors and associated span or messenger wires	
					0 to 750 V to ground (ft)	Over 750 V to 22 kV to ground (ft)
a. Less than 20 acres	17.5	18.0	18.5	20.5	—	—
b. Over 20 to 200 acres	25.5	26.0	26.5	28.5	—	—
c. Over 200 to 2000 acres	31.5	32.0	32.5	34.5	—	—
d. Over 2000 acres	37.5	38.0	38.5	40.5	—	—
8. Established boat ramps and associated rigging areas; areas posted with sign(s) for rigging or launching sail boats	Clearance aboveground shall be 5 ft greater than in 7 above, for the type of water areas served by the launching site					
Where wires, conductors, or cables run along and within the limits of highways or other road rights-of-way but do not overhang the roadway						
9. Roads, streets, or alleys	15.5 ㉑	16.0	16.5	18.5	18.0 ⑤	20.0 ⑤
10. Roads where it is unlikely that vehicles will be crossing under the line	13.5 ⑯ ⑫	14.0 ⑯	14.5 ⑯	16.5	18.0 ⑤	20.0 ⑤

①Where subways, tunnels, or bridges require it, less clearance above ground or rails than required by Table 232-1 may be used locally. The trolley and electrified railroad contact conductor should be graded very gradually from the regular construction down to the reduced elevation.

②For wires, conductors, or cables crossing over mine, logging, and similar railways that handle only cars lower than standard freight cars, the clearance may be reduced by an amount equal to the difference in height between the highest loaded car handled and 20 ft, but the clearance shall not be reduced below that required for street crossings.

③Does not include neutral conductors meeting Rule 230E1.

④In communities where 21 ft has been established, this clearance may be continued if carefully maintained. The elevation of the contact conductor should be the same in the crossing and next adjacent spans. (See Rule 225D2 for conditions that must be met where uniform height above rail is impractical.)

⑤In communities where 16 ft has been established for trolley and electrified railroad contact conductors 0 to 750 V to ground, or 18 ft for trolley and electrified railroad contact conductors exceeding 750 V, or where local conditions make it impractical to obtain the clearance given in the table, these reduced clearances may be used if carefully maintained.

⑥This footnote not used in this edition.

Copyright © 2006 IEEE. All rights reserved.

5.2 Right-of-Way Width Calculation

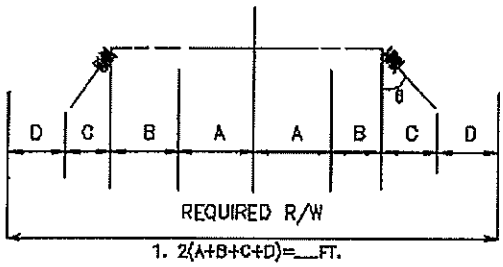

1. 2(A+B+C+D)=__FT.

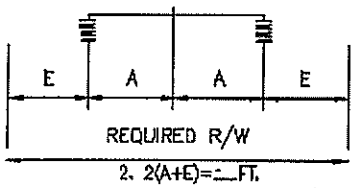

2. 2(A+E)=__FT.

2(8ft+9.6ft) ≈ 36ft

A = Distance between end of arm conductor attachment and center of structure 8 ft. Conservative # Based on Structure Type

B = Structure attachment deviation due to deflection 0.5 ft. Large Deflection Should Not Occur

C = Blowout (Calculate for point of maximum blowout). Assume suspension insulator (if any) blowout at same angle as conductor.

a) Max. sag within R/W 6 ft. (@6 lb./ft.^{2} wind, 60°F final sag).* Max Sag (Sag 10)

b) Insulator String Length Ø ft. (suspension string only).

c) Vertical Force V = .656 lb/ft. (weight of conductor) (Sag 10)

d) Horizontal force H = 6 lb./ft.^{2} x .858"12 inch per foot (cond. dia.) = .429 lb/ft. (Sag 10)

e) Blowout angle θ =tan^{-1} H/V = Ø degree

f) Blowout, C = [(a) + (b)] sin θ = Ø ft.

D =Clearance requirement to building or objects with conductor displaced by wind per NESC Rule 234: 6.6 ft.

E =Clearance requirement to buildings or objects with conductor at rest per NESC Rule 234: 9.6 ft.

Table 5.2.1 Minimum Horizontal Separation

Conductor Nominal Line to Line Voltage	Min. Horizontal Separation (NESC)**	
	D (ft)	E (ft)
34kV	5.0	8.0
69kV	5.2	8.2
138kV	6.6	9.6
345kV	10.8	13.8
765kV	17.2	22.3

* The maximum sag within the Right-of-Way for an existing line or a known set of span lengths should reflect the greatest sag of all the known span lengths. For new construction, for which no structures have yet been spotted and span lengths have not been determined, a sag should be calculated based on a span length equal to the largest anticipated individual span length for the Right-of-Way. This is commonly estimated as the design ruling span times 1.30.

** Minimum horizontal separation shown as D is for conductor with wind displacement and minimum horizontal separation shown as E is for conductor at rest. Calculate required Right-of-Way width based on clearance requirements D and E and take larger of the two. Clearance values shown do not include any margins of safety. Refer to Table 3.2.2 for appropriate margins of safety.

TABLE 9-3
RECOMMENDED RUS CONDUCTOR AND OVERHEAD
GROUND WIRE TENSION AND TEMPERATURE LIMITS (Note B)

Temperatures

- Tension limits for conditions 1, 2 and 3 below are to be met at the following temperatures:

Heavy loading district	0° F
Medium loading district	15° F
Light loading district	30° F

- Tension limits for condition 4 are to be met at the temperature at which the extreme wind is expected.
- Tension limits for condition 5 are to be met at 32° F

Tension Condition (See section 9.6.2 for explanation)	Tension Limits (percentage of rated breaking strength)		
	Conductor	OHGW High Strength Steel	OHGW Extra High Strength Steel
1. Maximum initial unloaded	33.3 (Note C)	25	20
2. Maximum final unloaded	25 (Note D)	25	20
3. Standard Loaded (usually NESC district loading)	50	50	50
4. Maximum extreme wind (Note A)	70 (Note E)	80	80
5. Maximum extreme ice (Note A)	70 (Note E)	80	80

Notes:

(A) These limits are for tension only. When conductor stringing sags are to be determined, tension limits 1, 2 and 3 should be considered as longs as tensions at conditions 4 and 5 are satisfactory.

(B) Tension limits do not apply for self-damping and other special conductors.

(C) In areas prone to aeolian vibration, a value of approximately 20 percent at the average annual minimum temperature is recommended, if vibration dampers or other means of controlling vibration are not used (see section 9.9 for further details).

(D) For 6201 AAAC, a value of 20 percent is recommended.

(E) For ACSR only. For 6201 Aluminum, use 60 percent.

ACA CONDUCTOR ACCESSORIES, SAG AND TENSION DATA

Tenaska 138kV Transmission Line
For ROW Calculation

Conductor HAWK 477.0 Kcmil 26/ 7 Stranding ACSR

Area= .4354 Sq. in Dia= .858 in Wt= .656 lb/ft RTS= 19500 lb
Data from Chart No. 1-782
English Units
Using Exact Catenary Equations

Span= 300.0 feet NESC Heavy Load Zone
Creep IS a Factor Rolled Rod

Design Points					Final		Initial	
Temp F	Ice in	Wind psf	K lb/ft	Weight lb/ft	Sag ft	Tension lb	Sag ft	Tension lb
0.	.50	4.00	.30	1.923	3.67	5893.	3.61	6000.*
32.	.50	.00	.00	1.500	3.80	4448.	3.48	4859.
-20.	.00	.00	.00	.656	1.40	5270.	1.33	5530.
0.	.00	.00	.00	.656	1.68	4404.	1.50	4924.
30.	.00	.00	.00	.656	2.27	3254.	1.84	4008.
60.	.00	.00	.00	.656	3.09	2390.	2.35	3141.
90.	.00	.00	.00	.656	4.02	1837.	3.05	2418.
120.	.00	.00	.00	.656	4.73	1561.	3.89	1899.
167.	.00	.00	.00	.656	5.38	1375.	5.22	1416.
212.	.00	.00	.00	.656	5.99	1234.	5.93	1247.

* Design Condition

Certain information such as the data, opinions or recommendations set forth herein or given by AFL representatives, is intended as a general guide only. Each installation of overhead electrical conductor, underground electrical conductor, and/or conductor accessories involves special conditions creating problems that require individual solutions and, therefore, the recipient of this information has the sole responsibility in connection with the use of the information. AFL does not assume any liability in connection with such information.

PATRICK

PROJECT NO

PROJECT Tenaska Transmission Line Study

CALCULATED BY CRK DATE 12/16/09

CHECKED BY DATE

TITLE Tenaska Transmission Lines – Current Calculation

SHEET 1 OF 1

Tenaska 138kV Transmission Line – Current Calculation

Equation:

$$I = \frac{P}{\sqrt{3}\,V\cos\theta}$$

Known Values:

$P = 15\ MW = 15 \times 10^6\ W$
$V = 138\ kV = 138 \times 10^3\ V$
$\cos\theta = pf = 0.9$

Calculated Current:

$$I = \frac{15 \times 10^6}{\sqrt{3}\,(138 \times 10^3)(0.9)} = 69.728\ A$$

ACSR Conductor Chosen: Hawk

Hawk Current Rating: 659 A

Tenaska 345kV Dual Circuit Transmission Line – Current Calculation

Equation:

$$I = \frac{P}{\sqrt{3}\,V\cos\theta}$$

Known Values (one circuit):

$P = 780\ MW = 780 \times 10^6\ W$
$V = 345\ kV = 345 \times 10^3\ V$
$\cos\theta = pf = 0.9$

Current Calculation:

$$I = \frac{780 \times 10^6}{\sqrt{3}\,(345 \times 10^3)(0.9)} = 1450.349\ A$$

ACSR Conductor Chosen: T2-Bluejay

T2-Bluejay Current Rating: 2184 A

TABLE 1-24
ALUMINUM CONDUCTOR, STEEL-REINFORCED (ACSR)

Code Word	Conductor Size, kcmil	Stranding, Al/St	Cross Sectional Area, Sq in		Layers of Aluminum	Diameter				Weight/1000 ft		
						Individual Wires		Steel Core, in	Complete Cable, in			
			Aluminum	Total		Aluminum, in	Steel, in			Aluminum, lbs	Steel, lbs	Total, lbs
Waxwing	266.8	18/1	0.2094	0.2210	2	0.1217	0.1217	0.1217	0.609	249.9	39.2	289.1
Partridge	266.8	26/7	0.2095	0.2436	2	0.1013	0.0788	0.2364	0.642	251.3	115.6	366.9
Junco	266.8	30/7	0.2095	0.2584	2	0.0943	0.0943	0.2829	0.660	251.9	165.5	417.4
Ostrich	300.0	26/7	0.2355	0.2738	2	0.1074	0.0835	0.2505	0.680	282.5	129.7	412.2
Merlin	336.4	18/1	0.2642	0.2789	2	0.1367	0.1367	0.1367	0.684	315.3	49.5	364.8
Linnet	336.4	26/7	0.2640	0.3070	2	0.1137	0.0884	0.2652	0.720	316.6	145.4	462.0
Oriole	336.4	30/7	0.2642	0.3259	2	0.1059	0.1059	0.3177	0.741	317.7	208.7	526.4
Chickadee	397.5	18/1	0.3122	0.3295	2	0.1486	0.1486	0.1486	0.743	372.5	58.5	431.0
Ptarmigan	397.5	20/7	0.3123	0.3339	2	0.1410	0.0627	0.1881	0.752	374.5	73.2	447.7
Brant	397.5	24/7	0.3122	0.3527	2	0.1287	0.0858	0.2574	0.772	374.4	137.0	511.4
Ibis	397.5	26/7	0.3120	0.3628	2	0.1236	0.0961	0.2883	0.783	374.1	171.9	546.0
Lark	397.5	30/7	0.3121	0.3849	2	0.1151	0.1151	0.3453	0.806	375.3	246.5	621.8
Pelican	477.0	18/1	0.3747	0.3955	2	0.1628	0.1628	0.1628	0.814	447.1	70.2	517.3
Tailorbird	477.0	20/7	0.3745	0.4004	2	0.1544	0.0686	0.2058	0.824	449.1	87.6	536.7
Flicker	477.0	24/7	0.3747	0.4233	2	0.1410	0.0940	0.2820	0.846	449.4	164.5	613.9
Hawk	477.0	26/7	0.3744	0.4354	2	0.1354	0.1053	0.3159	0.858	449.0	206.4	655.3
Hen	477.0	30/7	0.3747	0.4621	2	0.1261	0.1261	0.3783	0.883	450.4	296.0	746.4
Osprey	556.5	18/1	0.4369	0.4612	2	0.1758	0.1758	0.1758	0.879	521.4	81.8	603.3
Sapsucker	556.5	22/7	0.4368	0.4797	2	0.1590	0.0883	0.2649	0.901	523.9	145.1	669.0
Parakeet	556.5	24/7	0.4372	0.4938	2	0.1523	0.1015	0.3045	0.914	524.3	191.8	716.1
Dove	556.5	26/7	0.4371	0.5083	2	0.1463	0.1138	0.3414	0.927	524.2	241.0	765.2
Eagle	556.5	30/7	0.4371	0.5391	2	0.1362	0.1362	0.4086	0.953	525.4	345.2	870.7
Peacock	605.0	24/7	0.4753	0.5370	2	0.1588	0.1059	0.3177	0.953	570.1	208.7	778.8
Squab	605.0	26/7	0.4749	0.5522	2	0.1525	0.1186	0.3558	0.966	569.5	261.8	831.3
Wood Duck	605.0	30/7	0.4751	0.5860	2	0.1420	0.1420	0.4260	0.994	571.2	375.3	946.5
Teal	605.0	30/19	0.4751	0.5834	2	0.1420	0.0852	0.4260	0.994	571.2	367.4	938.6
Kingbird	636.0	18/1	0.4997	0.5275	2	0.1880	0.1880	0.1880	0.940	596.3	93.6	689.9
Swift	636.0	36/1	0.4994	0.5133	3	0.1329	0.1329	0.1329	0.930	596.0	46.8	642.8
Goldfinch	636.0	22/7	0.4994	0.5484	2	0.1700	0.0944	0.2832	0.963	598.8	165.8	764.7
Rook	636.0	24/7	0.4996	0.5643	2	0.1628	0.1085	0.3255	0.977	599.1	219.1	818.2
Grosbeak	636.0	26/7	0.4995	0.5808	2	0.1564	0.1216	0.3648	0.990	599.0	275.2	874.2
Scoter	636.0	30/7	0.4995	0.6160	2	0.1456	0.1456	0.4368	1.019	600.5	394.6	995.1
Egret	636.0	30/19	0.4995	0.6135	2	0.1456	0.0874	0.4370	1.019	600.5	386.7	987.2
Flamingo	666.6	24/7	0.5238	0.5917	2	0.1667	0.1111	0.3333	1.000	628.2	229.7	857.9
Gannet	666.6	26/7	0.5234	0.6086	2	0.1601	0.1245	0.3735	1.014	627.7	288.5	916.2
Stilt	715.5	24/7	0.5622	0.6350	2	0.1727	0.1151	0.3453	1.036	674.2	246.6	920.8
Starling	715.5	26/7	0.5620	0.6535	2	0.1659	0.1290	0.3870	1.051	674.0	309.7	983.7
Crow	715.5	54/7	0.5619	0.6347	3	0.1151	0.1151	0.3450	1.040	673.8	246.5	920.4
Redwing	715.5	30/19	0.5617	0.6897	2	0.1544	0.0926	0.4630	1.081	675.3	434.0	1109.3
Coot	795.0	36/1	0.6244	0.6417	3	0.1486	0.1486	0.1486	1.040	745.1	58.5	803.6
Cuckoo	795.0	24/7	0.6244	0.7053	2	0.1820	0.1213	0.3639	1.092	748.8	273.9	1022.6
Drake	795.0	26/7	0.6247	0.7264	2	0.1749	0.1360	0.4080	1.108	749.1	344.3	1093.4
Skimmer	795.0	30/7	0.6245	0.7702	2	0.1628	0.1628	0.4884	1.140	750.7	493.3	1244.0
Macaw	795.0	42/7	0.6246	0.6567	3	0.1376	0.0764	0.2292	1.055	749.0	108.6	857.6
Tern	795.0	45/7	0.6242	0.6674	3	0.1329	0.0886	0.2658	1.063	748.6	146.1	894.7
Condor	795.0	54/7	0.6240	0.7049	3	0.1213	0.1213	0.3639	1.092	748.4	273.9	1022.2
Mallard	795.0	30/19	0.6245	0.7669	2	0.1628	0.0977	0.4885	1.140	750.7	483.2	1233.9
Ruddy	900.0	45/7	0.7066	0.7555	3	0.1414	0.0943	0.2829	1.131	847.4	165.5	1013.0
Canary	900.0	54/7	0.7069	0.7985	3	0.1291	0.1291	0.3873	1.162	847.7	310.2	1157.9
Corncrate	954.0	20/7	0.7492	0.8010	2	0.2184	0.0971	0.2910	1.165	898.5	175.5	1074.0
Redbird	954.0	24/7	0.7495	0.8466	2	0.1994	0.1329	0.3990	1.196	898.8	328.7	1227.5
Rail	954.0	45/7	0.7492	0.8010	3	0.1456	0.0971	0.2913	1.165	898.5	175.5	1074.0
Cardinal	954.0	54/7	0.7491	0.8462	3	0.1329	0.1329	0.3987	1.196	898.3	328.7	1227.1
Canvasback	954.0	30/19	0.7491	0.9199	2	0.1783	0.1070	0.5350	1.248	900.5	579.6	1480.1
Snowbird	1033.5	42/7	0.8121	0.8539	3	0.1569	0.0872	0.2616	1.203	973.9	141.5	1115.4
Ortolan	1033.5	45/7	0.8112	0.8673	3	0.1515	0.1010	0.3030	1.212	972.8	189.9	1162.7
Curlew	1033.5	54/7	0.8112	0.9164	3	0.1383	0.1383	0.4149	1.245	972.8	356.0	1328.8
Bluejay	1113.0	45/7	0.8745	0.9350	3	0.1573	0.1049	0.3147	1.259	1048.7	204.8	1253.6
Finch	1113.0	54/19	0.8746	0.9855	3	0.1436	0.0862	0.4310	1.293	1053.9	376.1	1430.1
Bunting	1192.5	45/7	0.9367	1.0014	3	0.1628	0.1085	0.3255	1.302	1123.4	219.1	1342.5
Grackle	1192.5	54/19	0.9365	1.0552	3	0.1486	0.0892	0.4460	1.333	1128.6	402.8	1531.4
Bittern	1272.0	45/7	0.9987	1.0678	3	0.1681	0.1121	0.3363	1.345	1197.7	233.9	1431.6
Pheasant	1272.0	54/19	0.9993	1.1259	3	0.1535	0.0921	0.4605	1.382	1204.3	429.4	1633.7
Dipper	1351.5	45/7	1.0614	1.1347	3	0.1733	0.1155	0.3465	1.386	1272.9	248.3	1521.2
Martin	1351.5	54/19	1.0614	1.1958	3	0.1582	0.0949	0.4745	1.424	1279.1	455.9	1735.0
Bobolink	1431.0	45/7	1.1236	1.2013	3	0.1783	0.1189	0.3567	1.427	1347.5	263.1	1610.6
Plover	1431.0	54/19	1.1241	1.2665	3	0.1628	0.0977	0.4885	1.465	1354.6	483.2	1837.8
Nuthatch	1510.5	45/7	1.1862	1.2682	3	0.1832	0.1221	0.3663	1.466	1422.5	277.5	1700.0
Parrot	1510.5	54/19	1.1856	1.3357	3	0.1672	0.1003	0.5015	1.505	1428.8	509.2	1938.1
Lapwing	1590.0	45/7	1.2492	1.3355	3	0.1880	0.1253	0.3759	1.504	1498.1	292.2	1790.3
Falcon	1590.0	54/19	1.2489	1.4072	3	0.1716	0.1030	0.5150	1.545	1505.0	537.0	2042.1
Chukar	1780.0	84/19	1.3986	1.5126	4	0.1456	0.0874	0.4370	1.602	1685.4	386.7	2072.1
Mockingbird	2034.5	72/7	1.5979	1.6671	4	0.1681	0.1122	0.3360	1.681	1925.7	234.3	2160.0
Roadrunner	2057.0	76/19	1.6152	1.7032	4	0.1645	0.0768	0.3840	1.700	1946.5	298.6	2245.1
Bluebird	2156.0	84/19	1.6931	1.8309	4	0.1602	0.0961	0.4805	1.762	2040.4	467.5	2507.9
Kiwi	2167.0	72/7	1.7022	1.7758	4	0.1735	0.1157	0.3471	1.735	2051.4	249.2	2300.5
Thrasher	2312.0	76/19	1.8155	1.9144	4	0.1744	0.0814	0.4070	1.802	2187.9	335.4	2523.3
Joree	2515.0	76/19	1.9750	2.0826	4	0.1819	0.0849	0.4245	1.880	2380.1	364.9	2745.0

Notes:
(1) Data based on a nominal cable manufactured in accordance with ASTM B 232.
(2) Resistance and ampacity based on an aluminum conductivity of 61.2% IACS at 20°C and a steel conductivity of 8% IACS at 20°C.
(3) Ampacity based on a 75°C conductor temperature, 25°C ambient temperature, 2 ft/sec wind, in sun, with an emissivity of .5 and a coefficient of solar absorption of .5, at sea level.
(4) Rated strengths based on Class A galvanized steel core wire in accordance with ASTM B 498

TABLE 1-24
ALUMINUM CONDUCTOR, STEEL REINFORCED (ACSR)

Metal Content, % Weight		Rated Strength, lbs	Resistance				GMR, ft	Reactance @ 1ft Spacing, 60 Hz		Ampacity @ 75°C Amps	Code Word
			dc	ac-60Hz							
Aluminum, %	Steel, %		@ 20°C, Ω/mile	25°C, Ω/mile	50°C, Ω/mile	75°C, Ω/mile		Inductive, Xa, Ω/mile	Capacitive, X'a, MΩ-mile		
86.4	13.6	6,880	0.3396	0.3471	0.3813	0.4155	0.0197	0.477	0.1090	449	Waxwing
68.5	31.5	11,300	0.3364	0.3437	0.3775	0.4113	0.0217	0.465	0.1074	457	Partridge
60.3	39.7	13,900	0.3342	0.3413	0.3748	0.4083	0.0227	0.459	0.1066	462	Junco
68.5	31.5	12,700	0.2992	0.3058	0.3358	0.3659	0.0230	0.458	0.1057	492	Ostrich
86.4	13.6	8,680	0.2693	0.2756	0.3027	0.3298	0.0221	0.463	0.1056	519	Merlin
68.5	31.5	14,100	0.2668	0.2728	0.2996	0.3264	0.0243	0.451	0.1040	529	Linnet
60.3	39.7	17,300	0.2650	0.2708	0.2974	0.3240	0.0255	0.445	0.1031	535	Oriole
86.4	13.6	9,940	0.2279	0.2336	0.2565	0.2794	0.0240	0.452	0.1031	576	Chickadee
83.7	16.3	11,100	0.2286	0.2342	0.2571	0.2801	0.0246	0.450	0.1027	577	Ptarmigan
73.2	26.8	14,600	0.2268	0.2321	0.2549	0.2777	0.0259	0.444	0.1019	584	Brant
68.5	31.5	16,300	0.2258	0.2311	0.2537	0.2764	0.0265	0.441	0.1015	587	Ibis
60.3	39.7	20,300	0.2243	0.2294	0.2518	0.2743	0.0277	0.435	0.1007	594	Lark
86.4	13.6	11,800	0.1899	0.1950	0.2141	0.2331	0.0263	0.441	0.4385	646	Pelican
83.7	16.3	13,100	0.1905	0.1955	0.2146	0.2337	0.0270	0.439	0.1000	647	Tailorbird
73.2	26.8	17,200	0.1890	0.1937	0.2127	0.2316	0.0283	0.433	0.0992	655	Flicker
68.5	31.5	19,500	0.1882	0.1928	0.2117	0.2305	0.0290	0.430	0.0988	659	Hawk
60.3	39.7	23,800	0.1869	0.1913	0.2100	0.2288	0.0304	0.424	0.0980	666	Hen
86.4	13.6	13,700	0.1628	0.1676	0.1838	0.2002	0.0284	0.432	0.0981	711	Osprey
78.3	21.7	17,600	0.1627	0.1672	0.1834	0.1997	0.0298	0.426	0.0974	717	Sapsucker
73.2	26.8	19,800	0.1620	0.1663	0.1825	0.1988	0.0306	0.423	0.0969	721	Parakeet
68.5	31.5	22,600	0.1613	0.1655	0.1817	0.1978	0.0313	0.420	0.0965	726	Dove
60.3	39.7	27,800	0.1602	0.1642	0.1802	0.1963	0.0328	0.415	0.0957	734	Eagle
73.2	26.8	21,600	0.1490	0.1532	0.1681	0.1830	0.0319	0.418	0.0957	760	Peacock
68.5	31.5	24,300	0.1484	0.1524	0.1672	0.1821	0.0327	0.415	0.0953	765	Squab
60.3	39.7	28,900	0.1474	0.1512	0.1659	0.1806	0.0342	0.410	0.0944	773	Wood
60.9	39.1	30,000	0.1475	0.1513	0.1660	0.1808	0.0342	0.410	0.0944	773	Teal
86.4	13.6	15,700	0.1424	0.1470	0.1612	0.1755	0.0304	0.424	0.0961	773	Kingbird
92.7	7.3	13,800	0.1430	0.1477	0.1620	0.1763	0.0301	0.425	0.0964	769	Swift
78.3	21.7	19,800	0.1423	0.1466	0.1608	0.1750	0.0319	0.418	0.0954	779	Goldfinch
73.2	26.8	22,600	0.1418	0.1458	0.1600	0.1742	0.0327	0.415	0.0950	784	Rook
68.5	31.5	25,200	0.1411	0.1451	0.1592	0.1733	0.0335	0.412	0.0946	789	Grosbeak
60.3	39.7	30,400	0.1402	0.1439	0.1579	0.1719	0.0351	0.407	0.0937	798	Scoter
60.8	39.2	31,500	0.1403	0.1440	0.1581	0.1720	0.0351	0.407	0.0937	798	Egret
73.2	26.8	23,700	0.1352	0.1393	0.1528	0.1663	0.0335	0.412	0.0943	807	Flamingo
68.5	31.5	26,400	0.1347	0.1385	0.1520	0.1654	0.0343	0.409	0.0939	812	Gannet
73.2	26.8	25,500	0.1260	0.1299	0.1425	0.1551	0.0347	0.408	0.0932	844	Stilt
68.5	31.5	28,400	0.1255	0.1292	0.1417	0.1543	0.0355	0.405	0.0928	849	Starling
73.2	26.8	26,000	0.1260	0.1299	0.1460	0.1596	0.0350	0.407	0.0932	833	Crow
60.9	39.1	34,600	0.1247	0.1282	0.1407	0.1531	0.0372	0.399	0.0920	859	Redwing
92.7	7.3	16,800	0.1144	0.1190	0.1303	0.1417	0.0337	0.411	0.0931	884	Coot
73.2	26.8	27,900	0.1134	0.1172	0.1285	0.1398	0.0365	0.402	0.0917	901	Cuckoo
68.5	31.5	31,500	0.1129	0.1166	0.1278	0.1390	0.0375	0.399	0.0912	907	Drake
60.3	39.7	38,300	0.1121	0.1155	0.1267	0.1379	0.0392	0.393	0.0904	918	Skimmer
87.3	12.7	20,100	0.1146	0.1189	0.1303	0.1417	0.0346	0.408	0.0927	887	Macaw
83.7	16.3	22,100	0.1143	0.1185	0.1305	0.1422	0.0352	0.406	0.0925	887	Tern
73.2	26.8	28,200	0.1134	0.1172	0.1315	0.1438	0.0368	0.401	0.0917	889	Condor
60.8	39.2	38,400	0.1122	0.1156	0.1268	0.1380	0.0392	0.393	0.0904	917	Mallard
83.7	16.3	24,400	0.1010	0.1051	0.1157	0.1260	0.0374	0.399	0.0906	958	Ruddy
73.2	26.8	31,900	0.1002	0.1039	0.1165	0.1273	0.0392	0.393	0.0898	960	Canary
83.7	16.3	25,600	0.0953	0.0994	0.1088	0.1183	0.0381	0.396	0.0897	996	Corncrate
73.2	26.8	33,500	0.0945	0.0982	0.1076	0.1170	0.0400	0.391	0.0890	1009	Redbird
83.7	16.3	25,900	0.0953	0.0994	0.1094	0.1191	0.0385	0.395	0.0897	993	Rail
73.2	26.8	33,800	0.0945	0.0982	0.1100	0.1202	0.0404	0.390	0.0890	996	Cardinal
60.8	39.2	46,100	0.0935	0.0968	0.1060	0.1153	0.0430	0.382	0.0877	1028	Canvasback
87.3	12.7	25,400	0.0881	0.0925	0.1012	0.1099	0.0395	0.392	0.0888	1043	Snowbird
83.7	16.3	27,700	0.0879	0.0921	0.1013	0.1102	0.0401	0.390	0.0886	1043	Ortolan
73.2	26.8	36,600	0.0872	0.0910	0.1018	0.1112	0.0420	0.385	0.0878	1047	Curlew
83.7	16.3	29,800	0.0816	0.0859	0.0943	0.1026	0.0416	0.386	0.0874	1092	Bluejay
73.7	26.3	39,100	0.0814	0.0852	0.0952	0.1039	0.0436	0.380	0.0867	1093	Finch
83.7	16.3	32,000	0.0762	0.0805	0.0804	0.0960	0.0431	0.382	0.0864	1139	Bunting
73.7	26.3	41,900	0.0760	0.0798	0.0891	0.0972	0.0451	0.376	0.0856	1141	Grackle
83.7	16.3	34,100	0.0714	0.0759	0.0832	0.0903	0.0445	0.378	0.0855	1184	Bittern
73.7	26.3	43,600	0.0712	0.0751	0.0838	0.0914	0.0466	0.372	0.0847	1187	Pheasant
83.7	16.3	36,200	0.0672	0.0718	0.0786	0.0853	0.0459	0.374	0.0846	1228	Dipper
73.7	26.3	46,300	0.0671	0.0710	0.0791	0.0862	0.0480	0.368	0.0838	1231	Martin
83.7	16.3	38,300	0.0635	0.0681	0.0745	0.0808	0.0472	0.371	0.0837	1272	Bobolink
73.7	26.3	49,100	0.0633	0.0673	0.0749	0.0816	0.0494	0.365	0.0829	1275	Plover
83.7	16.3	40,000	0.0602	0.0649	0.0709	0.0769	0.0485	0.367	0.0829	1313	Nuthatch
73.7	26.3	51,700	0.0600	0.0641	0.0712	0.0776	0.0508	0.362	0.0821	1317	Parrot
83.7	16.3	42,200	0.0572	0.0620	0.0677	0.0733	0.0497	0.364	0.0822	1354	Lapwing
73.7	26.3	54,500	0.0570	0.0611	0.0679	0.0739	0.0521	0.359	0.0814	1359	Falcon
81.3	18.7	51,000	0.0512	0.0561	0.0609	0.0658	0.0534	0.355	0.0803	1453	Chukar
89.2	10.8	46,800	0.0450	0.0509	0.0551	0.0593	0.0553	0.351	0.0789	1551	Mockingbird
86.7	13.3	50,400	0.0445	0.0502	0.0543	0.0585	0.0562	0.349	0.0785	1567	Roadrunner
81.4	18.6	60,300	0.0423	0.0477	0.0516	0.0555	0.0588	0.344	0.0775	1622	Bluebird
89.2	10.8	49,800	0.0423	0.0484	0.0523	0.0562	0.0570	0.348	0.0779	1607	Kiwi
86.7	13.3	56,700	0.0396	0.0457	0.0493	0.0529	0.0595	0.342	0.0768	1672	Thrasher
86.7	13.3	61,700	0.0364	0.0428	0.0460	0.0493	0.0621	0.337	0.0755	1751	Joree

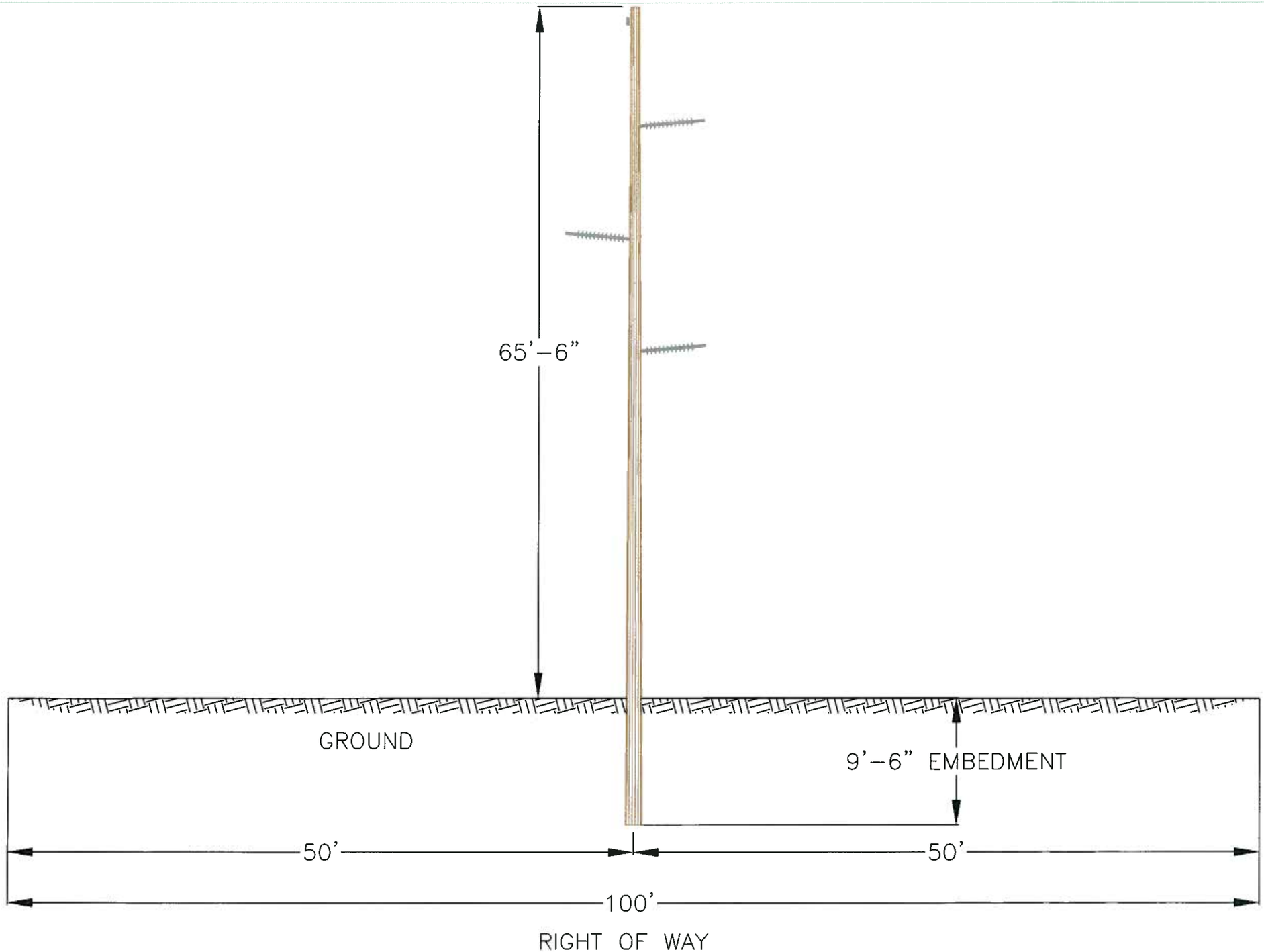

PATRICK ENERGY SERVICES
39500 Orchard Hill Place
Novi, Michigan 48375
TEL: (248) 319-0700
FAX: (248) 319-0701
http://www.patrickes.com

Project: 138kV CONSTRUCTION POWER SECTION VIEW

Date: 11/19/2009

Designed: PES

Drawn: PES

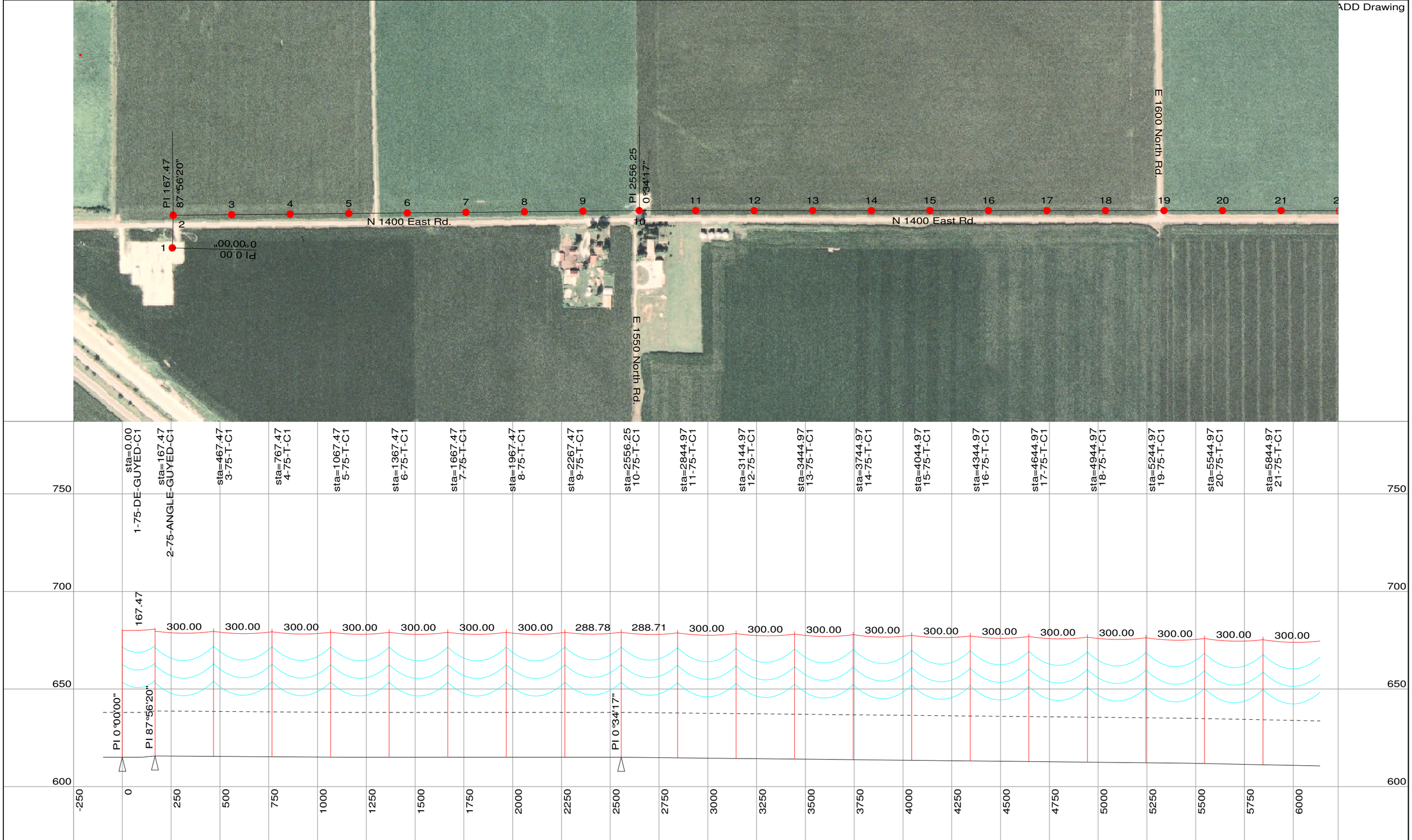

200.0 ft. Horiz. Scale

20.0 ft. Vert. Scale

North

Tenaska 138kV
Transmission Line
Preliminary Layout

12/1/2009
Page 1/2

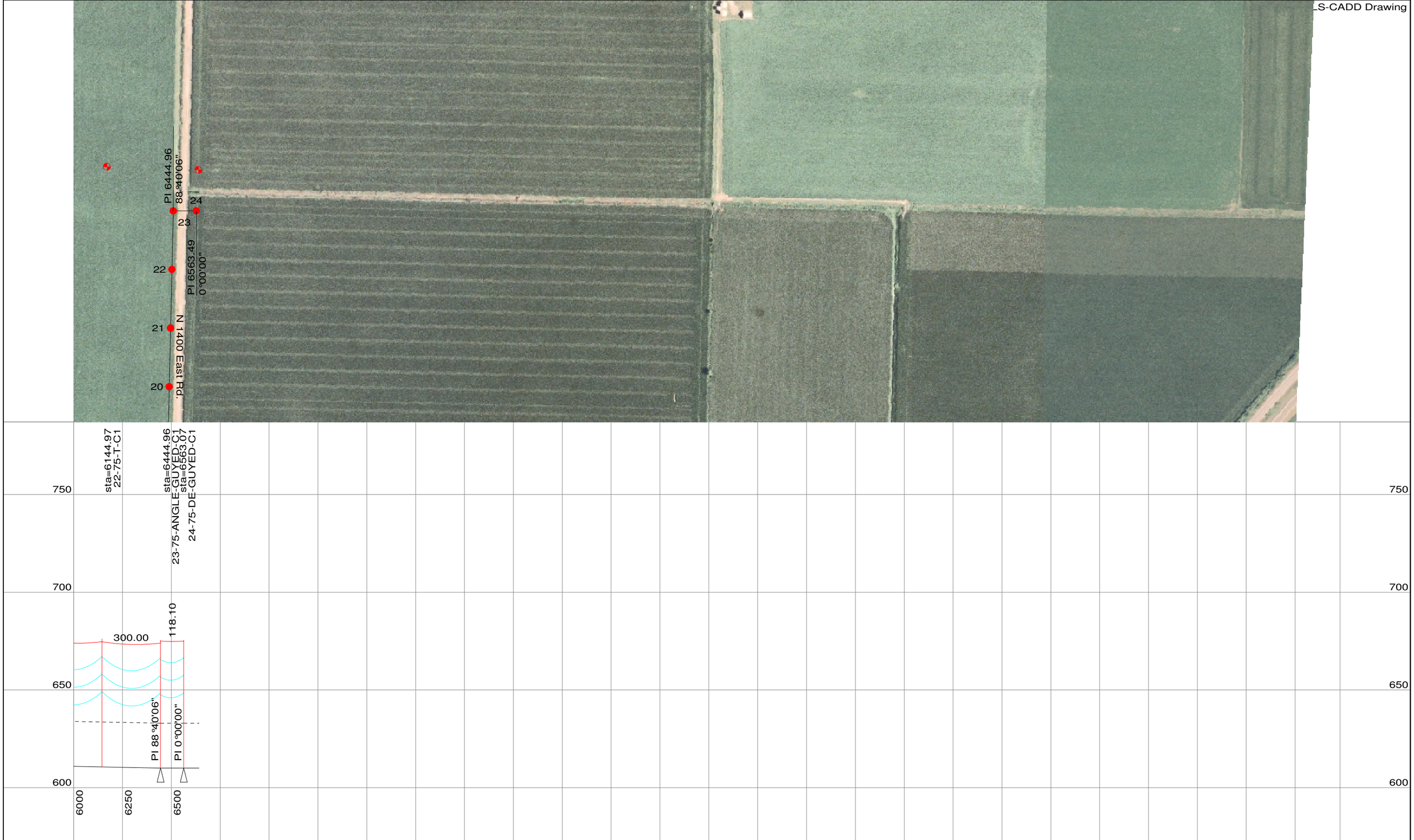

200.0 ft. Horiz. Scale

20.0 ft. Vert. Scale

North

Tenaska 138kV
Transmission Line
Preliminary Layout

12/1/2009
Page 2/2

TENASKA 138kV- TAYLORVILLE - TRANSMISSIONLINE ENGINEERING	
TASK DESCRIPTION	**TOTAL HOURS**
PLS CADD	
Line Design	136
Structure Design	
Tangent	12
Tagent Deadend	
Light Angle	
Medium Angle DE	
Large Angle DE	12
Special Structure	18
Engineering Documents	
BOM / Hardware Fitup	84
Structrue Drawings/Details	82
L&D Drawings	78
Staking Reports	16
Work List	52
Plan and Profile Drawings - Approx. 10 sheets	112
Vendor Calc/Dwg Check	16
As-Builts	37
Project Management	
Project Management	80
Construction Support	54
Vendor Support	26
Bid Review	24
Administration	80
Meetings	
At Tensaka Offices (Quarterly)	192
Phone Conferrence (Weekly)	120
Site Visits	
Pre-design/Accessibility Walk Through	48
Staking Review	32
50% Design Review Meeting	48
Construction Support/Review	32
Final Walk Down/As-Built Walk Down	32
Sub Contracted Work	
Survey	34
Permits	
Road Crossing	50
Environmental	44
TOTAL HOURS/DRAWINGS	1,551
TOTAL COST	$170,073

TENASKA 138kV- TAYLORVILLE - TRANSMISSIONLINE ENGINEERING								
EXPENSE DEVELOPMENT								
TRAVEL							**TOTAL ENGINEERING COSTS**	
Air fare	24	trips x	1,000	$/trip	=	$24,000	Employee labor cost (SPR)	$170,073
Hotel	48	night x	150	$/day	=	$7,200	Contingency	10%
Car rental	14	day x	65	$/day	=	$910	Labor Revenue	$187,080
Parking fees	48	day x	25	$/day	=	$1,200		
Meals	48	day x	50	$/day	=	$2,400	Expenses	$37,988
Gas	700	gallons	3	$/gal	=	$1,750	Markup on Expenses	5%
Mileage	960	miles	0.55	$/mile	=	$528	Expense Revenue	$39,887
Subtotal - Travel						**$37,988**	**TOTAL COST**	**$226,968**

Appendix B

Substation Engineering

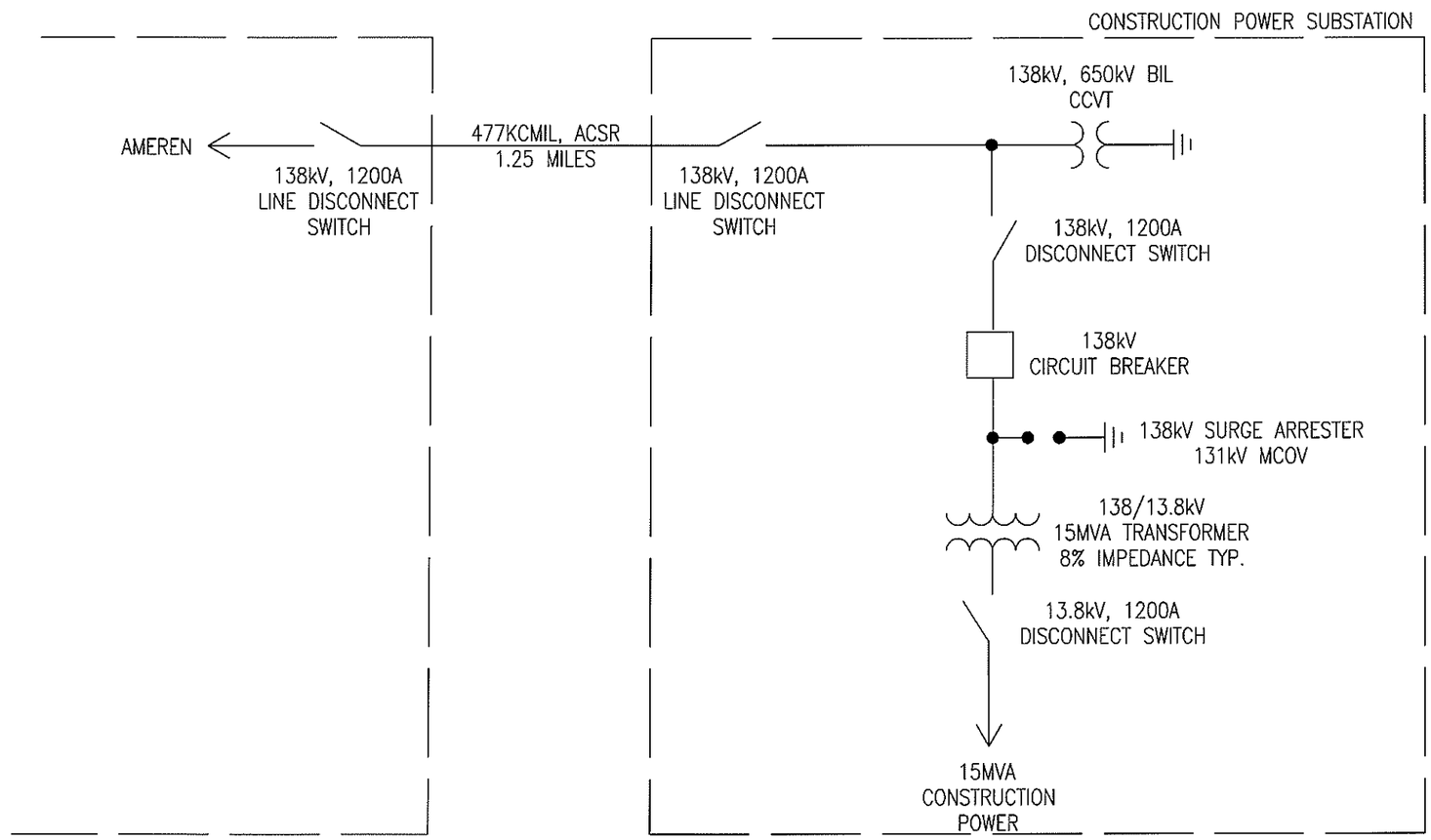

Rev. No.	Date	Description

PATRICK
ENERGY SERVICES
39500 Orchard Hill Place
Novi, Michigan 48375
TEL: (248) 319-0700
FAX: (248) 319-0701
http://www.patrickesi.com

Project:
138kV CONSTRUCTION POWER ONE LINE

Sheet Title:

Date: 11/17/2009

Designed: PES

Drawn: PES

Sheet 1 of 1

COPYRIGHT PROTECTED © 2009 PATRICK ENGINEERING, INC.

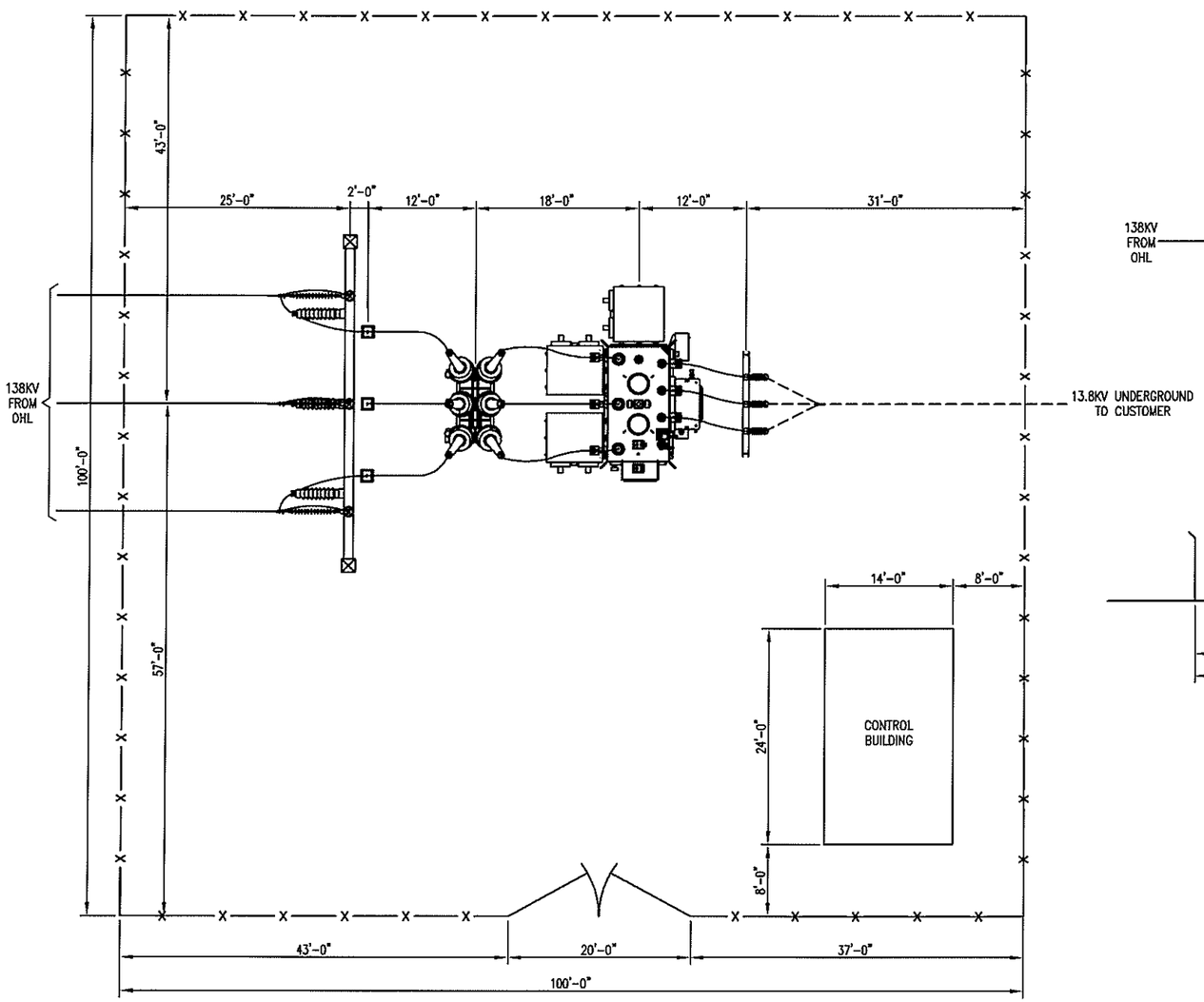

PLAN

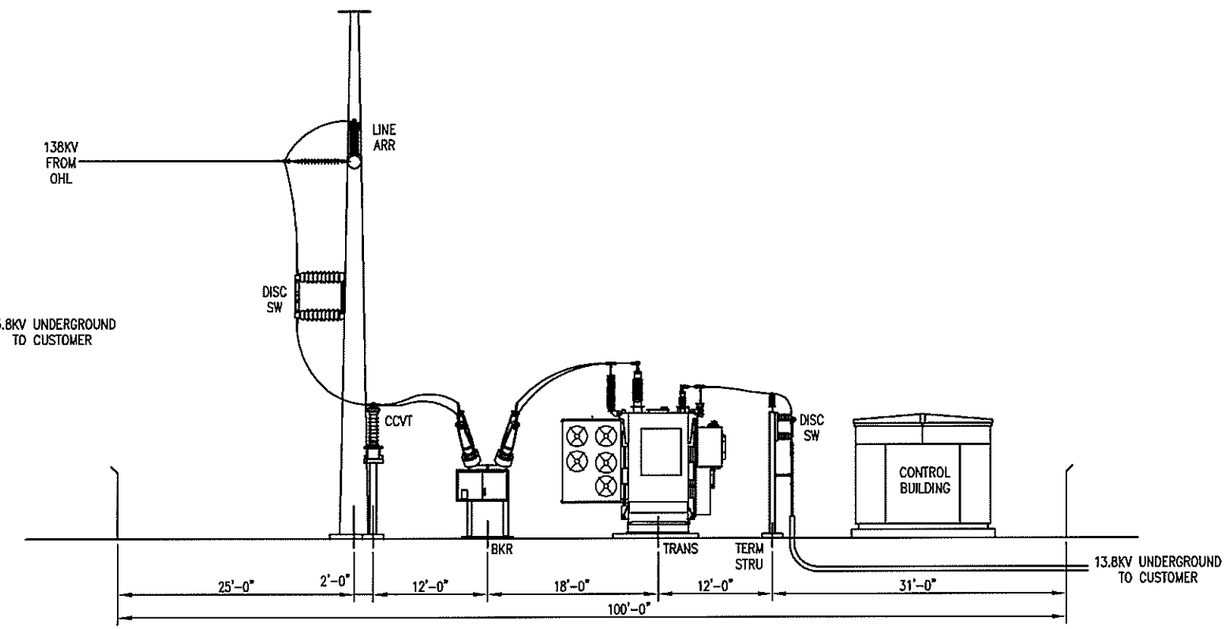

ELEVATION

Rev. No.	Date	Description

PATRICK
ENERGY SERVICES
39500 Orchard Hill Place
Novi, Michigan 48375
TEL: (248) 319-0700
FAX: (248) 319-0701
http://www.patrickesi.com

Project: **138kV CONSTRUCTION ARRANGEMENT PLAN AND ELEVATION**

Sheet Title:

Date: 12/10/2009

Designed: PES

Drawn: PES

Sheet 1 of 1

COPYRIGHT PROTECTED © 2009 PATRICK ENERGY SERVICES, INC.

TENASKA 138kV- TAYLORVILLE - SUBSTATION ENGINEERING			
DISIPLINE			HOURS
Project Management			80
Administrative			10
Ground Resistivity Testing			$3,000.00
Soil Boring Management			$3,000.00
Civil Engineering/Design			
	Site Development		
		Grading Plan & Details	20
		Drainage plan & Details	10
		Oil Containment	20
	Foundations		
		Dead End Structure (with sw)	20
		CCVT	20
		Circuit Switcher	20
		Transformer	20
		Termination Structure (with sw)	20
		Lightning Mast	20
		Control Building	20
	Steel Structures		
		Dead End Structure (with sw & ccvt)	20
		Termination Structure (with sw)	20
		CCVT Structure	20
		TOTAL CIVIL	250
Electrical Engineering/Design			
	Above Grade Equipment		80
		Dead End Structure (with sw)	
		CCVT	
		Circuit Switcher	
		Transformer	
		Termination Structure (with sw)	
		Lightning Mast	
		Control Building	
	Below Grade Conduits		60
		Control Conduits	
		Power Conduits	
	Grounding Design/Analysis		60
		TOTAL ELECTRICAL	200
CAD Drafting Support			
	Civil		200
	Electrical		50
	P&C		100
		TOTAL CAD	350
P&C Engineering			
		One and Three Line Design	30
		DC Schematics	40
		Panel and Control House Layout	20
		Wiring	80
		Battery , Thermal and CT calcs	10
		QA/QC	70
		TOTAL P&C	250
TOTALS			**$125,000.00**

PATRICK
ENGINEERING

Appendix C

Aerial Survey

Link, Nicholas

From: [redacted]
Sent: Monday, November 16, 2009 8:47 AM
To: Link, Nicholas
Cc: Bromley, Pat
Subject: RE: Tenaska 138kV line Aerial survey

Categories: Green Category

Nicholas,

Here are the cost proposals you requested:

138 kV line Only
1.25 miles on it's own to the same specs as the 345 kV proposal.
Total cost $ 4,645.00

138 kV line with 345 kV line
Additional 1.25 miles if done at the same time as the 345 kV project.
Total cost $ 2,320.00

138 kV and 345 kV
Total cost $ 26,775.00

Please let me know if you need a formal proposal?

Thanks,
[redacted]

[redacted]

From: Link, Nicholas
Sent: Fri 13-Nov-09 3:19 PM
To: [redacted]
Cc: Bromley, Pat
Subject: Tenaska 138kV line Aerial survey

[redacted]
This email is to follow up on the voicemail I left you.

Tenaska wants a estimate +/- 25% of what it would cost to aerial survey for a 138kV line. The line is 1.25 miles long and extends directly south of the proposed energy center as shown on the attached picture. We want a price to complete the job completely separate from the 345kV proposal you already submitted and an additional cost if it were to be completed simultaneously with the 345kV Line. We would like this budgetary estimate by early next week.
If you have any questions feel free to contact me.

Thanks,

November 13, 2009

Mr. Nicholas Link
Patrick Energy Services
39500 Orchard Hill Place, Suite 200
Novi, MI 48375

Dear Nicholas:

The following is [redacted] proposal for a) airborne LIDAR (laser-scan), b) airborne color digital imagery, c) airborne digital video, d) airborne "Happy Snap" digital still images of existing transmission line structures and substations, e) continuous overlapping oblique right-of-way imagery (if requested), f) continuous overlapping vertical right-of-way imagery (if requested), g) preparation of LIDAR intensity imagery (if requested), h) preparation of a PLS-CADD model, i) preparation of a digital terrain model, and j) preparation of plan/profile or planimetric drawings (if requested) for the approximately 1.25 miles-long Construction and Back-up Power Transmission Line associated with the Tenaska 345KV Transmission Line near Taylorville, Illinois.

The transmission line mileage is approximate; therefore, total mileage and total price contained in this estimate will be adjusted for actual transmission line, right-of-way, or corridor mileage when actual mileage information becomes available. The unit prices per mile contained in this estimate are valid for increases or decreases in total transmission line mileage.

Certain information contained in this proposal is considered by [redacted] and its subcontractors to be proprietary and confidential. [redacted] requests that Patrick Energy Services treat this information as confidential, just as Patrick Energy Services treats its own confidential information.

[redacted] and its subcontractors understand the project scope to be defined as follows.

Project Scope:

Collect airborne LIDAR (laser-scan), digital video, weather, and airborne color digital imagery (digital aerial photography) data and prepare color imagery maps, LIDAR intensity imagery (if requested), digital video, digital "Happy Snap" still images of transmission line structures and substations, continuous overlapping oblique right-of-way imagery (if requested), continuous overlapping vertical right-of-way imagery (if requested), a digital terrain model, a PLS-CADD model, and plan/profile or planimetric drawings (if requested) of the transmission line listed above. All data capture work will be performed by [redacted] employees using

[redacted]-owned aircraft and remote sensing equipment, unless otherwise specified by [redacted] and agreed to by the customer or client. All data processing, engineering model preparation, and drawing preparation will be performed by [redacted] employees located in [redacted] Bessemer, Alabama office or [redacted] Picayune, Mississippi office, unless otherwise specified by [redacted] and agreed to by the customer or client. The work is described as follows:

1. Collect airborne LIDAR (laser-scan) and associated modeling data, using LIDAR remote sensing platform, that will provide the following:
   - Three-dimensional LIDAR (laser-scan) point coordinates
     - Horizontal point coordinates will be referenced to the appropriate State Plane Coordinate System-North American Datum 1983 (NAD83), and vertical point elevations will be referenced to the North American Vertical Datum of 1988 (NAVD88).
     - The units of measurement will be US survey feet.
     - Point data collected will be a) filtered, b) reduced in volume (to remove redundant and otherwise unnecessary points), and c) classified as
       - Ground,
       - Man-made structures, and
       - Vegetation and Other.
     - Data capture swath width for LIDAR (laser-scan) of the transmission line corridor or right-of-way will be at least 400 feet, as specified by Patrick Energy Services, to ensure complete coverage for a digital terrain model, features, and obstacles of the entire 300'-wide corridor or right-of-way. The laser-scan coverage will be uniform, consistent, and continuous over the land areas to be modeled.
     - The point accuracy of TopEye Mark II LIDAR System is the following:
       - Absolute positional accuracy at 95% confidence: (Horizontal: 5 cm; Vertical: 5 cm)
       - Relative (point-to-point) accuracy = (+/-) 2 cm
     - The point accuracy of [redacted] LIDAR data, taking into consideration features such as grass, brush, conductor attach points, atmospheric conditions, etc., is the following:
       - LIDAR vertical data accuracy is 0.50 feet:1000 feet ranging distance RMSE at 2 sigma (95% probability) or better for critical design points such as:
         - Conductor attachment points
         - Shield wire attachment points
         - Conductor and shield wire impingement points
         - Aerial obstacles and features
       - LIDAR vertical data accuracy is 0.25 feet:1000 feet ranging distance RMSE at 1 sigma (68% probability) or better for non-critical design points such as:
         - Ground obstacles
         - Vegetation
         - Ground features

- Up to four (4) coordinate points will be collected for each laser pulse, using multiple return signals from a single laser pulse. *This capability ensures that "ground" return signals are captured, even when penetrating vegetation.*
- The return signal strength (e.g., LIDAR intensity) will be captured for each coordinate point collected. LIDAR intensity is used to generate LIDAR intensity imagery, a LIDAR dot portrait of the geographic area, transmission line, features, and obstacles that are scanned by the LIDAR system. Signal intensity is also used as part of the classification/filtering process and the obstacle digitization process to identify objects in the laser-scan data.
- Laser scan-rate: Adjustable to 50 Hz; Laser scan-angle = (+/-) 20 degrees
- Laser pulses per second: Adjustable to 50,000
- Laser point density: 26-40/ sq. meter (Avg.), 15/sq. meter (Min.)
- Elliptical scan pattern (advantageous for capturing wire-crossings)
  - Forward scan angle = 20 degrees
  - Side-to-side scan angle = 20 degrees
  - Aft scan angle = 14 degrees
- Number data points captured per second (approximate): Up to 200,000

  Note: Laser-scan data (including the return signal intensity values) will be used to establish horizontal position and to determine height of obstacles and features identified using color digital imagery during the obstacle digitization process.
- FDA-certified **binocular eye-safe distance = 60 meters**, with automatic shutdown feature (**SAFETY REQUIREMENT**)

- Two full-motion, color, high-resolution digital videos (broadcast quality), if requested.
  - Orientations – vertical & oblique (45 degrees declination from horizontal)
  - Edited to remove extraneous aircraft flight path maneuvers
  - Geo-referenced to support playback using [redacted] PLS-CADD Image/Video Player software
  - Video cameras are NOT gyro-stabilized.
  - Delivered as **MPEG** or **AVI** file(s) on DVD or external hard disk drive.

- Continuous, overlapping, high resolution oblique right-of-way color digital imagery that operates in [redacted] PLS-CADD video player, if requested.

- Continuous, overlapping, high resolution vertical right-of-way color digital imagery that operates in [redacted] PLS-CADD video player, if requested.

- Color, geo-referenced, high-resolution (16 MPixel resolution) digital ("Happy Snap") images of transmission structures, major obstacles, and construction difficulties, if requested:
  - Camera orientation: **30 to 60 degrees** declination from horizontal, depending on structure spacing and aircraft altitude required by the LIDAR data capture operations
  - Photo format = **portrait**
  - Camera resolution = **12Mpixel**
  - **Entire structure** captured in photograph
  - Geo-referenced to support playback using [redacted] PLS-CADD Image/Video Player software (also provided as a MS/Excel spreadsheet with each photograph linked to spreadsheet by structure ID name/number)
  - Indexed to structure ID name/number - structure ID name/number to be supplied by Patrick Energy Services
  - Delivered as geo-referenced images (**jpg**) on DVD.

2. Capture and process airborne color, high-resolution (12 MPixel) digital imagery of the transmission line corridor or right-of-way. The color digital imagery will be suitable for the production of strip maps of the transmission line corridor or right-of-way, including:
   - Full color, geo-referenced, orthorectified high-resolution digital imagery (digital aerial photography) that has been edge-matched and color-balanced to produce a continuous geo-mosaic map of the entire transmission line corridor or right-of-way.
     - The swath width of the geo-mosaic imagery strip maps of transmission line corridor or right-of-way will be approximately 500 feet (e.g., approximately 250 feet on either side of the corridor or right-of-way centerlines), subject to image cropping requirements.
     - The imagery will have a ground-pixel size resolution of approximately 6 inches.
     - The imagery will be ortho-rectified using LIDAR digital elevation models for the width of the LIDAR data that is collected and will be ortho-rectified to a USGS digital elevation model outside the boundaries of the LIDAR data capture.

   - Full color geo-mosaic map sheets with digitized obstacles for use by ground obstacle verification personnel or crews to assist them in identifying obstacles and features that have not been digitized located and identified using laser-scan and color digital imagery.

   - Full color, digital, geo-referenced, orthorectified geo-mosaic imagery maps of the transmission line corridor or right-of-way in ECW compressed electronic format.

- Full color strip map backgrounds on transmission line plan/profile or planimetric drawings, if requested.

- Full color strip map backgrounds for the plan-view of the PLS-CADD model.

3. Capture and process survey control data and weather data for use in data processing and modeling.
   - Survey control monumentation associated with each ground control (GPS) reference point used in support of the airborne laser-scan activities. To provide GPS ground control for the LIDAR and color digital imagery (aerial photography) data capture and post processing, [redacted]pically sets up GPS recording stations on USGS monuments and records the GPS reference information for the entire duration of all data capture flights. Trimble R7 5700 GPS units are used for setup over USGS monuments.
     - [redacted]requires that airborne data collection flights occur within 15 miles of the (ground control) recording GPS units (ground reference stations) that are set up on stable, high-quality USGS monuments.
     - If there are no useable USGS monuments within 15 miles of all points along a data capture flight line, [redacted]will (with concurrence of the transmission facilities owner) either
       - Engage a licensed land surveyor to set new first-order quality survey ground control monuments (using available CORS stations) or
       - Baseline to a new ground control point in the vicinity of the data capture flight path. To accomplish the baseline operation, [redacted] would set up a recording GPS unit over a known USGS monument and then set up a second GPS station at the baseline point to be established. The GPS recording units record GPS data for a minimum of one hour for every 7 miles (straight-line distance) away from the occupied USGS monument that the baseline monument is located. This procedure is necessary to properly establish the location of the baseline GPS. Subsequently, the new baseline GPS location can be used successfully as a new ground control point.
   - To document the USGS monument that was used as the initial ground control, [redacted] does the following on site:
     - Makes a "pencil rub" of the inscribed lettering on the UGSG monument and
     - Takes pictures of the USGS monument and its surroundings.

- Weather conditions report, indicating wind speed, wind direction, ambient temperature, and sun conditions in 5-minute intervals at time of laser-scan data capture for the transmission line corridor or right-of-way. Weather data will be captured at multiple sites near the existing transmission line.

4. Prepare Basic Product Set that includes the following:
   - Transmission line plan/profile or planimetric drawings per Patrick Energy Services drawing specifications (ie. Patrick Energy Services drawing borders, title block, line widths, line colors, text sizes, text colors, etc.) in AutoCAD or Microstation format at data capture ambient conditions, if requested by Patrick Energy Services. The drawings will be prepared at a vertical scale of 1"=20' and at a horizontal scale of 1"=200', as applicable, or as otherwise specified by Patrick Energy Services, and will be delivered in electronic form on DVD and as hardcopy prints.

   - PLS-CADD model of transmission line, corridor, and/or right-of-way at data capture ambient conditions with features and obstacles that are located and identified by laser-scan and color digital imagery, with a digital terrain model of the corridor or right-of-way, and with color digital imagery as a background for the plan views.

   - LIDAR intensity imagery in PLS-CADD format, if requested. The LIDAR intensity imagery is composed of LIDAR points with location attributes and with the gray-scale color defined by the LIDAR reflection intensity generated by the object within the transmission line rights-of-way or corridors which produced the LIDAR reflection. Due to the accuracy of the LIDAR intensity imagery, it is extremely beneficial for lines routing and pole spotting along roadways and city streets.

   - Color digital imagery geo-mosaic map sheets with digitized features and obstacles that are located and identified by laser-scan and color digital imagery.

   - Color digital video at 45 degrees and 90 degrees in MPEG format.

   - Continuous, overlapping, high resolution oblique right-of-way color digital imagery that operates in [redacted] PLS-CADD video player, if requested.

   - Continuous, overlapping, high resolution vertical right-of-way color digital imagery that operates in [redacted] PLS-CADD video player, if requested.

   - Color "Happy Snap" still digital images of individual transmission structures and substations, if requested.

Project Planning/Coordination/Data Capture

Project planning, coordination, and data capture include the following:

1. Mission planning: [redacted] will initiate mission-planning activities immediately on completion of a contract or a work authorization document. Activities associated with the preparation of mission plans will include:
   - Acquisition of existing maps and information from Patrick Energy Services.
   - Acquisition of topographical feature codes or other identifiers from Patrick Energy Services for preparation of PLS-CADD model.
   - Identification by Patrick Energy Services of the exact start/end points and PI's (turn points) for the transmission line corridor or right-of-way.
   - Preparation of pilot navigation and instrument control data for project.
   - Identification of emergency services.
   - Identification and qualification of ground (GPS) control.
   - Preparation of mission plans (includes **Safety Plan**).
2. Data capture coordination: [redacted] will coordinate its data capture activities as follows to ensure successful and uneventful mission.
   - Coordination with local law enforcement, civil aviation, and emergency service providers, as required.
   - Coordination with Tenaska's Transmission Line Engineering Department for access to the transmission line corridor or right-of-way.
   - Coordination with Tenaska's "Control Center" for data-capture flights over the transmission line corridor or right-of-way.
   - Coordination with FAA and local airport authorities regarding permits, licenses, and access to controlled airspace.
   - Assignment of ground-air-ground radio frequencies to facilitate ground-based mission control of all airborne data capture activities. **This is a flight-safety requirement.**
3. Data capture:
   - Airborne data capture: The following equipment and crews may be used for airborne laser-scan and color digital imagery data capture for transmission lines, generating plants, and substations:

- Helicopter(s)/TopEye laser-scan instrument/color digital imagery equipment: The following primary and backup helicopters may be used for laser-scan and color digital imagery data capture:
  - Primary: N350BA, American Eurocopter AS350B/A helicopter (turbine engine, blue and white with gray trim), TopEye Mark II laser system, color digital still camera, vertical/oblique digital video, crew (flight operations manager, pilot, instrument operator, ground control station operator(s), geomatics engineer or technician).
- Fixed-wing aircraft/color digital imagery equipment: The following primary fixed-wing aircraft may be used for color digital imagery data capture:
  - Primary: N14XT, Partenavia high-wing airplane (twin reciprocal engines, white with blue and red trim), color high-resolution digital camera, crew (pilot and camera/ground reference station operator).

- Ground-based data capture: The following equipment and crews may be used for ground-based weather data capture and ground-based GPS data capture for land areas, transmission lines, generating plants, and substations:
  - Weather instruments: Multiple Davis Instruments Weather Wizard III portable weather stations with recording equipment in vinyl container (marked with [redacted] logo and telephone numbers) and with weather probes mounted on telescopic masts.
    - Temperature accuracy: +/- 1 degree F
    - Temperature range: -50 degrees F to 140 degrees F
    - Wind speed accuracy: +/- 5%
    - Wind speed range: 2 mph to 150 mph (2.9 ft/sec to 220 ft/sec)
    - Wind direction accuracy: +/- 7 degrees
  - Ground-based GPS instruments: Multiple Trimble 5700 survey grade GPS units that are set up at survey monuments and USGS monuments to collect GPS data for dual frequency, differential GPS coordinate calculations.

Project Deliverables

The following are the project deliverables:

1. Color digital imagery of transmission line, corridor, and right-of-way (GIS-compatible).
   - Full color digital imagery ground obstacle verification map sheets with digitized obstacles that are located and identified by laser-scan and color digital imagery for use by ground obstacle verification personnel or crews, if requested.

   - Full color, digital, geo-referenced, orthorectified geo-mosaic imagery maps of the transmission line corridor or right-of-way in ECW electronic format on DVD, accompanied by the appropriate ECW-viewer software.

- Full color strip map backgrounds for electronic transmission line plan/profile or planimetric drawings at a scale of 1"=200', if requested.

- Full color strip map backgrounds for plan-view of PLS-CADD model.

2. ASCII data files (GIS-compatible) of laser-scan coordinate point data (X, Y, Z, Intensity), if requested.

3. Survey monument information (documentation) for transmission line corridor or right-of-way.

4. Weather conditions data report for transmission line, corridor, and/or right-of-way, including:
   - Location of monitoring instruments
   - Recorded data at 5-minute intervals during laser-scan data capture
     - Date/time of data acquisition
     - Ambient temperature
     - Wind speed
     - Wind direction
     - Sun conditions

5. Full-motion vertical and oblique color digital video of corridor or right-of-way flown transferred to DVD, if requested.

6. LIDAR intensity imagery of transmission line right-of-way or corridor in PLS-CADD format, if requested.

7. Color digital imagery "Happy Snaps" of transmission line structures, obstacles, substations, and construction difficulties, if requested. "Happy Snap" imagery will be geo-referenced to support playback using [redacted] PLS-CADD Image/Video Player software and also will be provided as an MS/Excel spreadsheet with each photograph linked to spreadsheet by structure ID name/number.

8. Continuous, overlapping, high resolution oblique right-of-way color digital imagery that operates in [redacted] PLS-CADD video player, if requested.

9. Continuous, overlapping, high resolution vertical right-of-way color digital imagery that operates in [redacted] PLS-CADD video player, if requested.

10. PLS-CADD model and plan/profile (or planimetric) drawings of transmission line, corridor, and/or right-of-way.
    - PLS-CADD model of transmission line, corridor, and/or right-of-way at data capture ambient conditions, which include:

- Ground profiles with center, ___' left offset, and ___' right offset profiles, as specified by Patrick Energy Services.
- Digital terrain model.
- Existing transmission structure locations and numbers.
- Station numbers.
- Existing transmission overhead shieldwire 3D laser data points and attachment points for shieldwires that are located and identified by laser-scan and color digital imagery.
- Existing transmission conductor 3D attachment points.
- Existing transmission conductor 3D laser data points.
- Existing distribution poles that are located and identified by laser-scan and color digital imagery, with feature codes, locations, and heights.
- Existing distribution conductor 3D laser data points.
- Existing distribution conductor 3D attachment points on existing transmission structures.
- Existing communication poles that are located and identified by laser-scan and color digital imagery, with feature codes, locations, and heights.
- Existing communication cable 3D laser data points.
- Existing communication cable 3D attachment points on existing transmission structures.
- Utility line crossings that are located and identified by laser-scan and color digital imagery, with feature codes, locations, and heights.
- Support structures on each side of the transmission line centerline for all line crossings, with crossing conductor's attachment heights, for all line crossings.
- Obstacles and features, including other overhead utility structures and conductors, within the transmission line corridor or right-of-way, that are located and identified by laser-scan and color digital imagery, with feature codes, locations, and heights.
- Color digital imagery strip maps of transmission line corridor or right-of-way in the PLS-CADD plan view.
- Geo-referenced Happy Snap (close-up) digital photographs, if purchased by Patrick Energy Services.

- Plan/profile drawings or planimetric drawings of transmission line, corridor, and/or right-of-way in AutoCAD or Microstation format on DVD at a vertical scale of 1"=20' and at a horizontal scale of 1"=200', if requested. The plan/profile drawings will include the following or planimetric drawings will include applicable items from the following:
  - Ground profiles with center, ___' left offset, and ___' right offset profiles, or as otherwise specified by Patrick Energy Services.
  - Existing transmission structure locations and numbers.
  - Station numbers, per Patrick Energy Services specifications.

- Existing transmission overhead shieldwire laser data points and attachment points for shieldwires that are located and identified by laser-scan and color digital imagery.
- Existing upper transmission conductor laser data points.
- Existing lowest transmission conductor catenary.
- Existing transmission conductor attachment points.
- Existing distribution poles that are located and identified by laser-scan and color digital imagery, with feature codes, locations, and heights.
- Existing distribution conductor 3D laser data points.
- Existing distribution conductor 3D attachment points on transmission structures.
- Existing communication poles that are located and identified by laser-scan and color digital imagery, with feature codes, locations, and heights.
- Existing communication cable 3D laser data points.
- Existing communication cable 3D attachment points on transmission structures.
- Utility line crossings that are located and identified by laser-scan and color digital imagery, with feature codes, locations, and heights.
- Support structures on each side of the transmission line centerline for all line crossings, with crossing conductor's attachment heights, for all line crossings.
- Obstacles and features, including other overhead utility structures and conductors, within the transmission line corridor or right-of-way that are located and identified by laser-scan and color digital imagery, with feature codes, locations, and heights.
- Color digital imagery strip map of transmission line corridor or right-of-way to depict 500' of property, or more where specified (e.g., 250' on each side of the transmission line centerline).

Pricing

The pricing estimates for this transmission line are presented in the following table. The transmission line mileage is approximate. Actual pricing will be based on actual transmission line mileage.

Pricing Estimate: Patrick Energy Services

Item	Task Description	Units	Unit Price	Quantity	Price
1	Mobilization *				
	Helicopter/Crew	Flt. Hrs.	$850		$0
	Fixed-wing/Crew	Flt. Hrs.	$325		$0
	Ground Support Crew	Days	$450		$0
	Task Subtotal				$0

2	Tenaska 345KV T.L. Construction & Back-up Power				
	Color Orthophoto Imagery ** (400' Swath)				
	Data Capture	Miles	$165	1.25	$206
	Image Processing	Miles	$125	1.25	$156
	Color Imagery Plots (Est.)	Each	$45	1.00	$45
	Subtask Subtotal				$408
	LIDAR (Laser-scan 400' Swath)				
	Data Capture	Miles	$400	1.25	$500
	Filter & Format Ckt. 1	Miles	$300	1.25	$375
	Filter & Format Ckt. 2	Miles	$150		$0
	PLS-CADD Model Ckt. 1	Miles	$175	1.25	$219
	PLS-CADD Model Ckt. 2	Miles	$125		$0
	PLS-CADD Mth.1 Str.&Sag Cond. Ckt. 1	Miles	$100		$0
	PLS-CADD Mth.1 Str.&Sag Cond. Ckt. 2	Miles	$100		$0
	Overlapping Oblique R/W Imagery	Miles	$185	1.25	$231
	Overlapping Vertical R/W Imagery	Miles	$65		$0
	LIDAR Intensity Imagery	Miles	$55	1.25	$69
	Color Video of Right-of-Way	Miles	$50	1.25	$63
	Subtask Subtotal				$1,456
	Additional Tasks and Deliverables				
	Digital Terrain Model (ROW-width) (within right-of-way)	Miles	$85	1.25	$106
	Contour Map From DTM	Miles	$75		$0
	Digitize Topo. Features/Obstacles (Urban /suburban from laser/digital imagery)	Miles	$250		$0
	Digitize Topo. Features/Obstacles (Rural from laser/digital imagery)	Miles	$200	1.25	$250
	Happy Snap Imagery (Estimated) ***	Each	$15		$0
	Ground Obstacle Verification ****	Days	$1,900	2.00	$3,800
	LIDAR Accuracy Assessment Per Site	Each	$1,000		$0
	P/P or Planimetric Drawings Ckt. 1	Miles	$200	1.25	$250
	P/P or Planimetric Drawings Ckt. 2	Miles	$150		$0
	Thermal Rating Ckt. 1(with DTA)	Miles	$350		$0
	Thermal Rating Ckt. 2(with DTA)	Miles	$350		$0
	Vegetation Analysis (with Thermal Anal.)	Miles	$460		$0
	Subtask Subtotal				$4,406
	Task Subtotal				$6,270

Total Cost with Planimetric Dwgs. & With Ground Obstacle Verification	**$6,270**
Total Cost with Planimetric Dwgs. & w/o Ground Obstacle Verification	**$2,470**
Total Cost w/o Planimetric Dwgs. & w/o Ground Obstacle Verification	**$2,220**
Total Cost with Planimetric Dwgs. & w/o Video & Ground Obstacle Verification	**$2,408**
Total Cost w/o Planimetric Dwgs., Video, & Ground Obstacle Verification	**$2,158**
Total Cost w/o Plan. Dwgs., Video, Gnd. Obs. Ver, & LIDAR Intensity Imagery	**$2,089**

Pricing Notes:
* NTE: Invoiced at-cost but Not-to-Exceed. **If data collection for this project can be performed on the same mobilization as the Tenaska 345KV Transmission Line, the mobilization cost is zero, as shown in the above pricing table.**

** Color digital imagery must be purchased for the project in order to digitize (locate and identify) obstacles and features from laser-scan and color digital imagery.

*** Optional color Happy Snaps for certain structures, obstacles, environmental hazards, construction difficulties, etc.

- The number of "Happy Snaps" in the pricing table above is estimated based on an anticipated number of structures per mile.
- If "Happy Snaps" are purchased by Patrick Energy Services, the actual price associated with this item will be computed to account for the actual number used, as based on the stated unit price.

Ground Obstacle Verification:

Although [redacted] TopEye Mark II LiDAR Systems detect most features and obstacles, some materials (e.g., particularly black polyethylene-covered CATV service drops, telephone wires that are not lashed to a messenger, and all-dielectric/self-supported fiber-optic cable) may not reflect enough laser light to be easily detected. Therefore, these and other obstacles with extremely low reflectivity may not be located and identified using laser-scan and color digital imagery. To ensure that all obstacles and features that may affect the operation of the transmission line are located and identified, a ground obstacle verification of the transmission line corridor or right-of-way is recommended by [redacted].

If requested by Patrick Energy Services, [redacted] will perform ground obstacle verification of the transmission line right-of-way or corridor that is mapped and/or modeled. The ground obstacle verification can be a right-of-way or corridor walk-through by qualified technicians or engineers, or it can be a ground obstacle verification survey by a small ground survey crew.

- If purchased by Patrick Energy Services, [redacted] personnel or an [redacted] sub-contractor ground obstacle verification survey crew will perform the ground obstacle verification with the aid of [redacted] digitized obstacles map product.
- Alternatively, Patrick Energy Services may elect to have its own ground survey crew or other personnel perform the ground obstacle verification, with or without the aid of [redacted] digitized obstacles map product.

- **A ground obstacle verification for the transmission line right-of-way or corridor is included as an option in the pricing estimate. The price for a ground obstacle verification of the transmission line right-of-way or corridor included in this proposal is $1900 per survey crew day, which has been added to the total Pricing Estimate Cost above. If Patrick Energy Services elects to have its own survey crews or its sub-contractor ground survey crew perform the ground obstacle verification of the transmission line right-of-way or corridor, the ground obstacle verification cost will not be included in the total project cost.**

Invoice Schedule:

1. The mobilization price and the data collection price will be invoiced when the data capture activity is completed.
2. The price associated with the ground verification, if requested, will be invoiced when the ground verification is completed.
3. The price of the color digital imagery, plan/profile drawings (if requested), and PLS-CADD model of each transmission line corridor will be invoiced when final products are delivered for each line.
4. Payments are due 30 days after date of invoice. Invoices that are unpaid after 30 days after the date of the invoice are subject to a 1½% per month delinquent fee.

Project Schedule

The schedule for this project will be as follows:

1. Color digital imagery and laser-scan data will be captured within two to three weeks (subject to acceptable weather conditions) or less after Patrick Energy Services
   - Accepts the proposal,
   - Executes a contract or provides a work authorization for the work, and
   - Provides transmission line P.I. (Point-of-Intersection) information necessary for the preparation of the flight mission plans.
2. Color digital imagery maps with digitized features and obstacles for the transmission line to be used for the ground obstacle verification will be prepared by [redacted] within two weeks after the laser-scan and color digital imagery data capture flights have been completed for the line.
3. Ground obstacle verification work, if requested by Patrick Energy Services from [redacted] will be completed within two to three weeks (subject to acceptable weather conditions) after [redacted] conducts data capture operations and prepares color digital imagery maps with digitized obstacles that are located and identified by laser-scan and color digital imagery.
4. Color digital imagery maps, digital terrain model, PLS-CADD model, digital video, Happy Snaps, continuous overlapping vertical imagery, continuous overlapping oblique imagery, and plan/profile or planimetric drawings for the transmission line corridor or right-of-way will be delivered within two weeks after the ground obstacle verification has been completed, or before. Therefore, all deliverables for the transmission line should be provided to

Patrick Energy Services within six weeks to seven weeks after the data capture flights have been completed, or within eight weeks to ten weeks after Patrick Energy Services accepts the proposal and provides the necessary information for flight planning and data processing. If a ground obstacle verification is not required of [redacted] but will be provided by Patrick Energy Services' ground survey crew or other personnel, all deliverables for the transmission line will be delivered to Patrick Energy Services within six to seven weeks after Patrick Energy Services accepts the proposal and provides the necessary information for flight planning and data processing.

Subcontractors

[redacted] subcontractors who may perform ground obstacle verification work for this project are:

Insurance

[redacted] at its expense, shall procure and maintain in effect policies of insurance providing the coverages and limits specified below:

1. Worker's Compensation in statutory amounts and Employer's Liability with a minimum limit of $1,000,000 per person.
2. Commercial General Liability Insurance on an Occurrence Basis, with the following coverages and limits:
3. General Aggregate $2,000,000
4. Products-Completed Operations-Aggregate $2,000,000
5. Personal & Advertising Injury $1,000,000
6. Each Occurrence $2,000,000
7. Fire Damage (any one fire) $ 50,000
8. Medical Expense (any one person) $ 5,000
9. Business Automobile Liability, including owned, hired and non-owned automobiles, for Bodily Injury and Property Damage with a combined single limit of $1,000,000 per occurrence.
10. Excess Liability in Umbrella Form with a limit of $3,000,000 each Occurrence, $3,000,000 Aggregate.
11. Commercial Aviation Liability Insurance, including coverage for Bodily Injury and Property Damage, with a limit of $10,000,000 combined single limit including passengers, $1,000,000 each person.

12 [redacted] insurance shall be primary insurance with respect to the Work and insurance of Patrick Energy Services shall be in excess of [redacted] insurance and shall not contribute with it.

13. [redacted] insurance carrier will have an A. M. Best's Insurance Guide rating of A VIII or better.

[redacted] Rates and Additional Charges for "Out-of-Scope" Work

1. [redacted] will provide additional electronic copies of LIDAR (laser-scan) data or PLS-CADD models for $25 per DVD plus the time required to compose the data at a rate of $75/hour.

2. [redacted] will provide additional electronic copies of the "Happy Snap" imagery for $25 per DVD plus the time required to compose the imagery to be stored to the DVD at a rate of $75/hour.

3. [redacted] will provide additional electronic copies of the color geo-mosaic map imagery, continuous overlapping oblique right-of-way imagery, continuous overlapping oblique right-of-way imagery, and/or digital vertical and oblique video for $25 per DVD plus the time required to compose the imagery to be stored to the DVD at a rate of $75/hour.

4. [redacted] will provide additional hardcopy plots of ground obstacle verification sheets, plan/profile drawings, or planimetric drawings at a rate of $45/drawing sheet.

Please call me at [redacted] or [redacted] with any questions or comments regarding this Proposal. Thank you for allowing us to offer this proposal.

Sincerely,

[redacted]

Link, Nicholas

From: [redacted]
Sent: Monday, November 23, 2009 1:58 PM
To: Link, Nicholas
Subject: RE: Tenaska 138kV line Aerial survey

Categories: Green Category

Nicholas,

The budgeting fee estimate for doing the 1.25 mile 138kV line completely separate is ~ $5500.
The budgeting fee estimate for doing the 1.25 mile 138kV line as part of the 345kV line is ~ $1500.

Please call or email if you have any questions or comments.

Thanks again for contacting us for these estimates.

Regards,

[redacted]

[redacted]
new address
[redacted]

From: Link, Nicholas [mailto:nlink@patrickesi.com]
Sent: Friday, November 20, 2009 12:49 PM
To: [redacted]
Subject: Tenaska 138kV line Aerial survey

No problem I understand these things happen. This paragraph below should be all the necessary details to put a number together.

[redacted]
As we talked about on the phone. Tenaska wants a estimate +/- 25% of what it would cost to aerial survey for a 138kV line. The line is 1.25 miles long and extends directly south of the proposed energy center as shown on the attached picture. We want a price to do the job completely separate from the 345kV proposal you already submitted and a price if it were to be completed simultaneously with the 345kV Line.
If you have any other questions feel free to contact me.

Thanks,

Nicholas Link

PATRICK
ENGINEERING

Appendix D

Site Survey

Link, Nicholas

From: [redacted]
Sent: Thursday, November 19, 2009 9:47 AM
To: Link, Nicholas
Subject: RE: Tenaska 138kV line ground survey

Categories: Green Category

Nick,

I forgot to send this to you earlier.

It is our sense that this project would take approximately $20,000 to perform. If it is done in conjunction with the other work we quoted in the area, there may be some discount.

Sincerely,

PATRICK
ENGINEERING INC.

[redacted]
Patrick Engineering, Inc.
4970 Varsity Drive
Lisle, IL 60532
(630) 795-7377 (office)
(630) 817-0371 (mobile)

From: Link, Nicholas
Sent: Friday, November 13, 2009 1:54 PM
To: [redacted]
Subject: Tenaska 138kV line ground survey

[redacted]
This email is to follow up on the voicemail I left you.

Patrick Energy Services is requesting an estimate to perform ground survey for a 1.25 mile route just north of Taylorville, Ill. We would like ground survey with Real-estate investigation, property lines & owners, and new easement exhibits for the owners. We would also like staking activities for the right of way as well as two occasions of construction staking. There will be approximately 15 poles that will need to be staked. We have an corridor width of approximately 100 feet along an existing road. I have attached a picture of our route. We would like to see a budgetary estimate to complete the job completely separate from the 345kV proposal you already submitted and a additional price if it were to be completed simultaneously with the 345kV Line. We would like this estimate within 25% accuracy by early next week.

If you have any questions or need more information please feel free to contact me.
Thanks,

Link, Nicholas

From: [redacted]
Sent: Tuesday, November 17, 2009 2:36 PM
To: Link, Nicholas
Subject: RE: Tenaska 138kV line ground survey

Categories: Green Category

The stand alone cost would be $14,500. Let me know if you need anything else. Thanks.

[redacted]

This message contains confidential information and is intended only for nlink@patrickesi.com. If you are not nlink@patrickesi.com you should not disseminate, distribute or copy this e-mail. Please notify [redacted] immediately by e-mail if you have received this e-mail by mistake and delete this e-mail from your system. E-mail transmission cannot be guaranteed to be secure or error-free as information could be intercepted, corrupted, lost, destroyed, arrive late or incomplete [redacted] therefore do not accept liability for any errors or omissions in the contents of this message, which arise as a result of e-mail transmission. If verification is required please request a hard-copy version.

From: Link, Nicholas [mailto:nlink@patrickesi.com]
Sent: Tuesday, November 17, 2009 10:02 AM
To: [redacted]
Subject: RE: Tenaska 138kV line ground survey

[redacted]

Thank you for your budgetary cost estimate. I will keep you up to date on the project status. Is the fee you have below the cost if the work was done in conjunction with the 345kV? If so, the client also wants to know the stand alone cost of the 138kV 1.25 mile line.
Thanks,

Nicholas Link
Staff Civil Engineer
PATRICK
ENERGY SERVICES
39500 Orchard Hill Place
Suite 200
Novi, MI 48375
Direct: (248) 319-0743
Main: (248) 319-0700
Fax: (248) 319-0701

nlink@patrickesi.com

From: [redacted]
Sent: Tuesday, November 17, 2009 9:07 AM
To: Link, Nicholas
Subject: RE: Tenaska 138kV line ground survey

Add $12,500 to the fee that I originally gave you for this additional route. Let me know if you need anything further and keep me informed of changes in the status of the project and the project schedule once known. Thanks.

[redacted]

This message contains confidential information and is intended only for nlink@patrickesi.com. If you are not nlink@patrickesi.com you should not disseminate, distribute or copy this e-mail. Please notify [redacted] immediately by e-mail if you have received this e-mail by mistake and delete this e-mail from your system. E-mail transmission cannot be guaranteed to be secure or error-free as information could be intercepted, corrupted, lost, destroyed, arrive late or incomplete. [redacted] therefore do not accept liability for any errors or omissions in the contents of this message, which arise as a result of e-mail transmission. If verification is required please request a hard-copy version.

From: Link, Nicholas [mailto:nlink@patrickesi.com]
Sent: Friday, November 13, 2009 3:05 PM
To: [redacted]
Subject: Tenaska 138kV line ground survey

[redacted]

This email is to follow up on the voicemail I left you.

Patrick Energy Services is requesting an estimate to perform ground survey for a 1.25 mile route just north of Taylorville, Ill. We would like ground survey with Real-estate investigation, property lines & owners, and new easement exhibits for the owners. We would also like staking activities for the right of way as well as two occasions of construction staking. There will be approximately 15 poles that will need to be staked. We have an corridor width of approximately 100 feet along an existing road. I have attached a picture of our route. We would like to see a budgetary estimate to complete the job completely separate from the 345kV proposal you already submitted and a additional price if it were to be completed simultaneously with the 345kV Line. We would like this estimate within 25% accuracy by early next week.

If you have any questions or need more information please feel free to contact me.
Thanks,

Nicholas Link

Link, Nicholas

From: [redacted]
Sent: Saturday, November 14, 2009 6:18 AM
To: Link, Nicholas
Subject: RE: Tenaska 138kV line ground survey
Attachments: image001.jpg

Categories: Green Category

Nicholas:

Our price for doing the 1.25 mile line separate from the 345kv live is **$19,000.**

Our price for doing the 1.25 mile line in conjunction with the 345kv line is **$12,000.**

Both projects have been estimated according to the scope of work as it now exists. The pricing can be adjusted, up or down, depending on the final scope from Tenaska.

I will be out of the office the first part of the week, but will be available on my cell phone, listed below. If you should call and get my voice mail, please leave a message and I'll get back at the first opportunity.

Sincerely,

[redacted]

-------- Original Message --------
Subject: Tenaska 138kV line ground survey
From: "Link, Nicholas" <nlink@patrickesi.com>
Date: Fri, November 13, 2009 2:59 pm
To: [redacted]
Cc: "Bromley, Pat" <PBromley@patrickesi.com>

[redacted]
This email is to follow up on our phone conversation.

Patrick Energy Services is requesting an estimate to perform ground survey for a 1.25 mile route just north of Taylorville, Ill. We would like ground survey with Real-estate investigation, property lines & owners, and new easement exhibits for the owners. We would also like staking activities for the right of way as well as two occasions of construction staking. There will be approximately 15 poles that will need to be staked. We have an corridor width of approximately 100 feet along an existing road. I have attached a picture of our route. We would like to see a budgetary estimate to complete the job completely separate from the 345kV proposal you already submitted and a additional price if it were to be completed simultaneously with the 345kV Line. We would like this estimate within 25% accuracy by early next week.

If you have any questions or need more information please feel free to contact me.
Thanks,

November 20, 2009

Mr. Nicolas Link
Patrick Energy Services
39500 Orchard Lake Place, Suite 200
Novi, Michigan 48375

[redacted] *Proposal No. P0905124*

RE: Tenaska 138kV Transmission Line Survey
Proposal for Professional Services
Taylorville, Illinois

Dear Mr. Link:

In response to your request [redacted] is pleased to submit this proposal to provide professional surveying services for the Tenaska 138kV Transmission Line Survey, located in Taylorville Township, Christian County, Illinois.

[redacted] is a consulting firm that offers the energy industry a results-driven, detail-oriented team of project managers, land surveyors, civil engineers, technical staff and specialized consultants who have the combined experience to support the success of the project. [redacted]s staff has extensive experience with large scale projects for several clients within the energy industry.

DISTINCT COMPETENCIES

Our work isn't just about measurements; it's about understanding client expectations and exceeding them. With nearly 20 years of experience [redacted] offers Patrick Energy and [redacted] the following advantages:

- *Over the past 20 years, [redacted] staff has successfully completed numerous large scale energy projects of various sizes and locations across the country.*
- *[redacted]s fleet of survey crews are fully-equipped with the most recent, state-of-the-art equipment increasing efficiency and allowing for accurate and responsive surveying services on a diverse range of fast-tracked projects.*
- *[redacted] almost exclusively completes field work utilizing one-person field crews, saving our clients time and money, while experiencing no loss of production and in most cases exceeding the productivity of a conventional two-person field crew.*

- *[redacted] adheres to technical standards outlined in the firm's Quality Assurance/Quality Control Manual (QA/QC), detailing all procedures utilized by all staff including the survey field crews. Included in the QA/QC manual are in-depth checklists and procedures for every task completed by [redacted] ensuring a quality process, and project, to the client.*

- *[redacted] comprehensive health and safety plan. Every field crew is equipped with a Satellite Personal Tracker, cell phone and first aid kit since the project work does occur in remote rural areas.*

- *Experienced project managers familiar with the needs of all types of clients and their project demands. These specialists offer creative and aggressive strategies for success from proposal to construction.*

PROJECT NARRATIVE

The project site consists of a proposed 1.25 mile 138kV transmission line beginning at the Ameren Substation, then proceeding North through predominately agricultural land to the proposed Taylorville Energy Station. Property base mapping, easement exhibits, topographic surveying, limited boundary surveying, right-of-way staking and construction staking of the proposed twenty-three (23) poles will be required to successfully complete the project.

[redacted] has extensive experience on these types of projects and provides survey consultation to a wide range of clients in the energy sector. By understanding the goals and visions of the end-users, we can deliver a superior product with quick response to client schedules. As part of this project, [redacted] will translate field and boundary data to prepare a property base map that can be utilized in a custom or existing GIS program to assist in cataloguing parcels, easements and utility tower data. Our familiarity with this type of project will allow us to perform surveys, locate property corners and determine boundary lines in the most cost-effective manner. By utilizing the latest in GPS technology, we will establish a control network to be used for the accurate and efficient completion of survey tasks listed below as well as for future tasks and layout.

UNDERSTANDINGS

In preparing the proposal, we have assumed the following:

- The fees quoted below are based upon your request for proposal via email, on November 17, 2009.
- [redacted] will require access to the site. If the Client is not the property owner, Client will provide [redacted] written authorization from the property owner granting permission to access the site.

- CAD files for engineering/construction plans, boundary and/or topographic surveys prepared by others will be provided to [redacted] prior to the commencement of services. [redacted] is entitled to rely upon the accuracy and completeness thereof without independent evaluation by [redacted]
- Estimates are based upon full days on-site for field crews.
- The Client shall provide current title documents with any existing easements prior to commencement of services, if needed.
- The project will be constructed in one phase.
- Offsite work is not considered within the scope of this proposal.
- The Client will be responsible for attendance at all public city/township meetings.
- Application and permit fees for the project are the Client's responsibility.
- [redacted] will take great care to minimize impacts to agricultural fields during the site activities, but will not be responsible for impacts to agricultural crops or plantings.

SCOPE OF SERVICES

[redacted] will provide professional surveying services to complete the project as follows:

Establish Control for the Site

- Establish approximately four (4) horizontal and vertical control monuments.
- Control monuments will be set outside of the construction limits for use throughout the duration of the project by [redacted] and/or others.
- The control monuments will be made of ½" x 36" rebar encased in 4" of concrete.
- [redacted] will provide a PDF drawing showing the location of the survey control monuments with coordinate and elevation information.

Field Survey

- [redacted] will perform local courthouse research and field surveying necessary to prepare a highly accurate property base map of all the parcels affected by the proposed transmission line.
- Parcel boundary lines will be shown in their approximate location based on recorded deeds and field located property corners.
- A complete boundary survey for each parcel will not be performed, but instead will include enough parcel information to adequately show the approximate location of the parcel lines for each individual property.
- Public Land Survey Section Corners will be located in the field and shown on the survey.
- Parcel ownership information including owner name and tax parcel numbers will be shown.
- The road right-of-way of N 1400 East Road will be staked along each side at 100-foot intervals from the Ameren Substation to the proposed Taylorville Energy Center.

- All work associated with this task will be performed under the direct supervision of a Licensed Professional Surveyor of the State of Illinois.

Topographic Survey

- [redacted] will perform a topographic survey of the proposed transmission line corridor and adjacent road right-of-way necessary to provide base mapping of all the parcels affected by the proposed transmission line.
- A topographic survey drawing will be prepared incorporating the boundary information and easement limits from previous tasks.
- Mapping will be at 1"=50' scale with 1-foot contours provided.
- Benchmarks will be utilized that were established during the survey control.
- The site elevation will be on the North American Vertical Datum of 1988 (NAVD88).
- Buildings, fences, driveways, power poles, tree and brush lines, rivers, streams, ditches will be shown within the prescribed survey limits.
- The survey limits will include all features described above within the road right-of-way plus 100 feet in each direction.
- Other visible man-made features.
- Spot elevations will be taken on a 50-foot square grid.
- [redacted] will locate existing utilities within or adjacent to the site, including existing utilities above ground and underground (if readily accessible or flagged by the utility company and/or locating service).
- This task will be performed concurrently with the Field Survey.

Exhibit Drawings/Legal Descriptions

- [redacted] will prepare Easement Description Exhibits as necessary for recording.
- These documents will include an Exhibit Drawing and Legal Description indicating the area to be included or affected. This also will be shown on the overall survey.
- Easement sketches will include existing easements of record as shown in the client provided title work.
- [redacted] will not be responsible for legal agreements/negotiations, the preparation of executable documents or the actual recording of these documents.
- This task will be performed concurrently with the Field Survey.

Construction Staking

- Transmission pole locations will be staked at the center point of the proposed pole with two (2) offsets at 15-feet and 25-feet
- One (1) offset stake will be graded to the proposed top of concrete elevation as shown per the approved construction plans and CAD drawing.
- *For estimating purposes, it is assumed that the transmission pole locations will be staked twice.*

- *A cost savings can be realized if permanent markers such as iron pipes can be utilized to complete the construction layout. Thus eliminating the need for multiple trips to complete the construction staking.*

ADDITIONAL SERVICES

- [redacted] has the capability to provide services outside of the agreed upon Scope of Services.
- These services would be considered Additional Services and would be provided upon client request.
- Additional Services will only be provided at the written request of the client.
- [redacted] has the capability to provide Additional Services as follows:
  - Record Drawings/As-Builts
  - Tree Survey
  - Wetland Mapping
  - Monumentation of property corners
  - Meeting attendance
  - Revisions made to the plan after the commencement of work
  - Any other [redacted] service not specifically listed in the Scope of Services.

FEE SCHEDULE

[redacted] proposes to provide Professional Surveying services as required to accomplish the indicated Scope of Services in accordance with the following fee schedule:

Establish Control Network	$1,100	(t & m estimate)
Field Survey	$7,200	(t & m estimate)
Topographic Survey	$5,700	(t & m estimate)
Exhibit Drawings/Legal Descriptions	$450	(fixed fee/exhibit)
Construction Staking	$4,400	(t & m estimate)
Hourly Rates		
Survey Field Crew (2 Person) w/ GPS	$120	(hourly rate)
Survey Field Crew (1 Person) w/ GPS	$75	(hourly rate)
Project Surveyor	$70	(hourly rate)
CAD Drafter	$52	(hourly rate)
Professional Surveyor	$80	(hourly rate)
Sr. Project Manager	$100	(hourly rate)
Additional Services	----------	(time & materials)

Invoices will be submitted monthly for work completed and payment is expected within thirty (30) days of the date of the invoice.

Upon acceptance of this proposal, please return a signed copy of the attached [redacted] Terms and Conditions. Upon receipt of the signed [redacted] Terms and Conditions, [redacted] will commit the staff and resources necessary to begin work on the project.

We are excited about the opportunity to work with you on this project, and we appreciate the opportunity to present this proposal. If you have any questions or comments regarding this proposal, or if we can be of further assistance during your review process, please feel free to contact one of us at [redacted]

Sincerely,

[redacted]

PATRICK
ENGINEERING

Appendix E

Geotechnical Services

Link, Nicholas

From: [redacted]
Sent: Friday, November 20, 2009 4:16 PM
To: Link, Nicholas
Subject: RE: Tenaska geotechnical services

Categories: Green Category

Nicholas,

I would propose a cost of $4,500.00 for the substation piece of this project. The mobilization cost, utility coordination cost, report cost and to some degree the lab testing costs are not spread out over as many borings and therefore it is a little more than 4 times the per boring cost for the 100 boring piece of the project.

Hopefully this helps, please let me know if you need anything else or if you need a formal proposal.

Thanks so much,

[redacted]

[redacted]

[redacted] fax | [redacted]

PLEASE NOTE: This message, including any attachments, may include privileged, confidential and/or inside information. Any distribution or use of this communication by anyone other than the intended recipient is strictly prohibited and may be unlawful. If you are not the intended recipient, please notify the sender by replying to this message and then delete it from your computer.

From: Link, Nicholas [mailto:nlink@patrickesi.com]
Sent: Friday, November 20, 2009 2:19 PM
To: [redacted]
Cc: Bromley, Pat
Subject: Tenaska geotechnical services

[redacted]

This email is following up on the voicemail I left you today.

We passed on the budgetary estimates for the 14 mile 345kV line to the client. They came back and asked us to put together another budgetary estimate for a 1.25 mile 138kV line and distribution substation. I'm requesting a budgetary estimate +/- 25% of the cost to perform borings and associated geotechnical report for the distribution substation (100 ft X 100 ft). I was estimating 4 borings would be adequate to provide the information needed to construct the 4 to 5 pad foundations being placed in the area. The client wants to look at this substation as a completely different project. The previous estimate you provided to me was $100,000.00 for 100 borings. I could extrapolate that number and say $4,000 but I wanted to check with you to see if that would be enough to cover the costs.

Thank you for your help on this.

Link, Nicholas

From: [redacted]
Sent: Friday, November 20, 2009 3:11 PM
To: Link, Nicholas
Subject: RE: Tenaska geotechnical services

Categories: Green Category

Nicholas,

Don't worry about it.

I suggest you use $10,000 for the substation, since the mob costs will be similar to the larger project, but only spread over 4 borings.
This would still assume 50 feet deep borings, as we previously quoted, and that the site is in the same general area.

Call or email me if there are other questions about possible scope and budget.

We hope this project goes ahead and look forward to working with you.

[redacted]

From: Link, Nicholas [mailto:nlink@patrickesi.com]
Sent: Friday, November 20, 2009 1:39 PM
To: [redacted]
Subject: RE: Tenaska geotechnical services

Sorry [redacted] I don't know why I called you [redacted]

From: Link, Nicholas
Sent: Friday, November 20, 2009 2:33 PM
To: [redacted]'
Cc: Bromley, Pat
Subject: Tenaska geotechnical services

[redacted]

This email is following up on the voicemail I left you today.

We passed on the budgetary estimates for the 14 mile 345kV line to the client. They came back and asked us to put together another budgetary estimate for a 1.25 mile 138kV line and distribution substation. They are requesting a budgetary estimate +/- 25% of the cost to perform borings and associated geotechnical report for the distribution substation (100 ft X 100 ft). I was estimating 4 borings would be adequate to provide the information needed to

construct the 4 to 5 pad foundations being placed in the area. The client wants to look at this substation as a completely different project. The previous estimate you provided to me was $200,000.00 for 100 borings. I could extrapolate that number and say $8,000 but I wanted to check with you to see if that would be enough to cover the costs.

Thank you for your help on this.

Nicholas Link
Staff Civil Engineer
PATRICK
ENERGY SERVICES
39500 Orchard Hill Place
Suite 200
Novi, MI 48375
Direct: (248) 319-0743
Main: (248) 319-0700
Fax: (248) 319-0701
nlink@patrickesi.com

Patrick Energy Services Inc. Confidentiality Notice: The information contained in the above e-mail message or messages (which includes any attachments) may contain confidential, proprietary, or legally privileged information. It is intended only for the use of the person or entity to which it is addressed. If you are not the addressee any form of disclosure, copying, modification, distribution, or any action taken or omitted in reliance on the information is unauthorized. If you received this communication in error, please notify the sender immediately and delete it from your computer system network.

[redacted] provides geotechnical, environmental, construction materials, and facilities consulting engineering services delivered with reliability, responsiveness, convenience, and innovation.

This electronic communication and its attachments are forwarded to you for convenience. If this electronic transmittal contains Design Information or Recommendations and not just general correspondence, [redacted], and/or its affiliates ([redacted]) will submit a follow-up hard copy via mail or delivery for your records, and this hard copy will serve as a final record. In the event of conflict between electronic and hard copy documents, the hard copy will govern. This e-mail and any attachments transmitted with it are the property of [redacted] and may contain information that is confidential or otherwise protected from disclosure. The information it contains is intended solely for the use of the one to whom it is addressed, and any other recipient should destroy all copies.

PROJECT DESCRIPTION and OBJECTIVES

The proposed project includes the construction of a 138kV transmission line distribution substation near Taylorsville, Illinois. We understand that distribution substation will occupy an area of approximately 100 feet by 100 feet in plan dimension.

The objectives of this geotechnical engineering investigation will be to assess the subsurface conditions within the area of the proposed substation and to provide recommendations to aid in the design and construction of the proposed substation.

PROPOSED WORK PLAN

Per the Client's request, [redacted] will drill a total of four (4) soil borings, each to a depth of 50 feet; for a total of 200 lineal feet of drilling. We understand each of the proposed borings locations will be marked by a surveyor and will be referenced on a map or plan sheets; which will be provided to [redacted] prior to the start of our field activities. [redacted] will visit the project site prior to drilling to observe and note ground cover, existing structures, pavement, site access and topographic conditions. If site conditions require that borings be relocated from previous agreed-upon locations, the Client will be advised.

[redacted] understands that access to the proposed boring locations and coordination with any property owners will be the responsibility of the Client. Additionally, the "clearing of utilities" within and outside of the public domain shall be the responsibility of the Client and coordinated with [redacted], prior to the start of any subsurface exploration.

The typical drilling method will utilize hollow-stem augers to advance the borings to the required depths. Split-spoon samples and Standard Penetration Tests values (commonly referred to as the blow-count or N-value) will be obtained in advance of the augers at 2.5 foot intervals to a depth of 10 feet, and 5-foot intervals thereafter per ASTM Method D-1586.

Shelby tube samples may be obtained in cohesive soil strata-of-interest. Each boring will be monitored for the presence of groundwater during and immediately following the completion of the boring.

Upon completion of the borings, the boreholes will be backfilled with auger cuttings prior to demobilization for safety considerations. ***It should be noted that it is standard practice in drilling test borings to backfill with the auger cuttings. However, sometimes the backfill will settle after the borings have been completed, requiring a return trip to backfill again. If this takes place, an additional fee will be charged for the return trip. As an alternative, for an additional fee, the holes can be backfilled with bentonite or grout to reduce the potential settlement.***

After the fieldwork is completed, we will return samples to [redacted] soils laboratory to perform the appropriate laboratory testing. The laboratory testing may include unconfined compressive strengths, natural moisture contents, Atterberg Limits and grain size determinations and other tests as requested and applicable. All laboratory testing will be performed in accordance with applicable ASTM methods.

Based on the results of the fieldwork and laboratory testing, we will prepare a Geotechnical Engineering Report. The report will present all field, test boring logs and laboratory test data. The report will include recommendations for foundation design, as well as providing a discussion regarding any potential construction difficulties due to soil and groundwater conditions.

ESTIMATED PROJECT COST

Based upon the information provided and as outlined in our attached work plan, along with our experience with similar projects, we estimate the project cost to be ***$3,500.00***. An itemized Cost Estimate is provided below. Work performed outside the Scope of Work discussed in this proposal will be performed at a unit rate basis for the actual work performed. Such work will be considered a change in scope. The *Client* will be provided with a budget for this work modification for approval and authorization prior to proceeding with the work.

Itemized Cost Estimate

1. Drilling Services Includes mobilization of one (1) drill rig and the completion of four (4) test borings totaling 200 lineal feet of drilling.	$2,100.00
2. Engineering and Laboratory Services Includes engineering field services, laboratory soil analysis and preparation of the geotechnical investigation report.	$1,400.00
Estimated Total Cost	***$3,500.00***

SCOPE OF WORK LIMITATIONS

In preparation of this proposal, we have assumed that the site is accessible to an ATV-mounted drilling rig. If "clearing" or "grading" of the site is required (i.e. trees, brush, crops etc...), an additional charge will be assessed. Additionally, supplemental costs will also be incurred if obstructions are encountered in the borings requiring additional offset borings to be performed, rock coring to be completed, or if the subsurface conditions require the use of wash rotary or other methods to help prevent soils from heaving up into the augers.

If the borings reveal inconsistent and/or marginal soil conditions requiring additional borings, deeper borings, additional samples, or additional laboratory testing, the Client's Project Manager will be consulted immediately with regard to the possibility of modifying the proposed subsurface investigation program. Such a modification may be considered a change in scope of the Proposed Work Plan, thereby requiring a possible adjustment to the budget of this Geotechnical Engineering Investigation.

The subsurface investigation outlined in this proposal assumes that there are no hazardous materials in the soil or in the groundwater underlying the site. This investigation is not designed to detect or identify such materials. If it becomes apparent during the field investigation that hazardous materials are present, field operations will temporarily cease. The field investigation could be resumed only after the appropriate health and safety issues are addressed and the scope of our investigation modified to address this change in condition.

WORK SCHEDULE

[redacted] will initiate project activities upon receipt of the attached Proposal Acceptance Agreement, authorizing us to begin work. The field drilling work should take 1 day to complete. We would expect to issue our engineering report within approximately 1 to 2 weeks of completing the fieldwork. However, verbal results can be provided shortly after the fieldwork is completed.

AUTHORIZATION TO PROCEED

As our formal authorization to proceed, please complete and sign the Proposal Acceptance Agreement form included with this proposal, indicating proper billing instructions, and return an executed copy of this acceptance agreement for our files. Also, please note the Terms and Conditions included with this proposal, which is an integral part of this proposal. Alternatively, this work may be authorized by a written purchase order or a letter instructing us to proceed, which provides for the Terms and Conditions herein.

ATTACHMENT A

Fee Schedule

	Unit	Unit Cost
PROFESSIONAL SERVICES		
Principal Engineer, P.E.	Hour	$170.00
Senior Project Engineer, P.E.	Hour	$125.00
Project Engineer, P.E.	Hour	$100.00
Senior Engineer/Geologist	Hour	$85.00
Geotechnical Engineer/Geologist	Hour	$75.00
Draftsperson/CAD Technician	Hour	$69.00
Senior Engineering Technician	Hour	$52.00
Word Processor	Hour	$58.00
LABORATORY TESTING		
Water Contents (oven dried)	Each	$4.85
Hand Penetrometer Test	Each	$9.25
Atterberg Limits (LL & PL)	Each	$62.00
Grain Size Distribution	Each	$108.00
Sieve Analysis only	Each	$51.00
Minus #200 Sieve only	Each	$32.00
Hydrometer only	Each	$59.00
Natural Density	Each	$26.00
Organic Content	Each	$31.00
pH Determination	Each	$26.00
Extrude & Log Shelby Tube Samples	Each	$25.00
Standard Proctor	Each	$130.00
Modified Proctor	Each	$150.00
CBR Test	Each / Point	$140.00
Unconfined Compressive Strength	Each	$52.00
Test for pH, organic matter, soluble salts	Each	$103.00
Triaxial Tests (CU - 3 circles)	Each	$900.00
Consolidation Test	Each	$410.00
Permeability Test (Cohesive Soils)	Each	$295.00
DRILLING SERVICES		
Mobilization of drill rig and crew (Local)	Lump Sum	$450.00
***plus $4.00 per mile over 60 miles from a Patriot office**		
Minimum Charge for drill rig, crew and equipment	Lump Sum	$1,000.00
Drilling with 3.25" and 4.25" hollow stem augers with standard splitspoon sample intervals		
Under 50 feet depth and under 50 blows per foot	Foot	$9.50
50 to 75 feet depth and under 50 blows per foot	Foot	$11.00
Over 75 feet depth or over 50 blows per foot	Foot	$13.90
Additional splitspoon samples beyond standard intervals	Each	$13.25
ATV Drilling , Add	Foot	$1.45
Mud Drilling, Add	Foot	$2.05
Drilling without splitspoons	Foot	$8.30
Bulk Samples (50 lb. bag)	Each	$57.00
Rock Coring	Foot	$31.00
Equipment, set-up for rock coring	Hole	$59.00
Shelby Tube Samples (3 in. O.D.)	Each	$46.50
Standby Time requested by Client or Hauling Water	Hour	$155.00
Rental of Dozer (to assist drill rig under adverse site conditions)	Cost + 15%	
Asphalt or Concrete Plug of Drill Holes	Hole	$26.00
Per Diem for Drill Crew per man	Per Day	$105.00
Grouting Holes	Foot	$7.75
Concrete Coring Through 6 to 8 inches of Floor Slab	Hole	$242.00
Monitoring Well Installation	Foot	$31.00
Monitoring Well Flush Manhole & Cover	Each	$237.00
GENERAL EXPENSES		
Transportation by Company or Personal Car	Mile	$0.59
Subcontractor Costs / Special Costs (i.e.., film, FedEx, etc.)	Cost + 15%	
Additional Copies of Report (above 3 copies)***plus time**	Page	$0.42
Out-of-Town Living Expenses	Cost + 15%	

PATRICK
ENGINEERING

Appendix F

Material Suppliers

[redacted]

Tenaska 138KV
Transmission Line Project

Patrick Engineering
Attn: Nicholas Link

QTY	UNIT	UNIT DESCRIPTION	DELIVERY	Unit Cost	Total
		Conductors			
20,200	ft	477 26/7 ACSR Hawk (5,780' reels)	7-9 weeks	$930.00	$20,646.00
6,800	ft	DNO-XXXX 24 Fiber OPGW	12-14 weeks	$2.28	$15,504.00
		Wood PoleStructures			
19	EA	75' H1 Doug Fir Wood Tangents Poles	2-3 weeks	$2,412.00	$45,828.00
4	EA	75' H4 Doug Fir Wood Dead End Poles	2-3 weeks	$3,412.00	$13,648.00
		Insulators & Hardware			
60	EA	522011-1100 Polymer Horz Line Post Trunion Type	8-10 weeks	$366.00	$21,960.00
18	EA	512008-1201 Polymer Suspension Dead End Insulators Wye Clevis Ball Type	8-10 weeks	$167.00	$3,006.00
60	EA	TSC-150 Trunion Clamps for 477 ACSR	6-8 weeks	$9.00	$540.00
60	EA	AR-o1XX 477 ACSR Armor Rods	2-4 weeks	$45.00	$2,700.00
18	EA	SD-112-S Bolted Dead End Clamps with Socket Eye 477 ACSR	8-10 weeks	$88.00	$1,584.00
19	EA	4301XXXX Fiberlign Suspension Assembly for OPGW Sheild	6-8 weeks	$87.00	$1,653.00
8	EA	289XXXX Fiberlign Dead End Assembly for OPGW Sheild	6-8 weeks	$139.00	$1,112.00
Advise	EA	5050XXXX OPGW Spiral Vibration Dampers	6-8 weeks	$8.00	$0.00
Advise	EA	1701-XXX 1113-T2 Stockbridge Type Dampers	6-8 weeks	$55.00	$0.00
120	EA	Machine Bolts and Mounting Hardware for Horz Post	6-8 weeks	$30.00	$0.00
18	EA	Eye Bolts and Mounting Hardware for Dead End Insulators	6-8 weeks	$55.00	$0.00
		Grounding			
23	EA	3/4 x 10 Ground Rods Copper Clad with Clamps	2-4 weeks	$20.00	$460.00
1,840	Ft	#2 BCSD Ground Wire Stranded	2-4 weeks	$1.00	$1,840.00
23	EA	Connecting Hardware, Staples, ETC to Wood Poles	4-6 weeks	$35.00	$805.00
		Splicing			
Advise	EA	477 ACSR Hawk Splices	2-4 weeks	$66.00	$0.00
Advise	EA	OPGW Splice Kits	2-4 weeks	$565.00	$0.00
		Equipment			
2	Ea	138Kv 1200 amp Disconect Switches with Motor Operator's	24-26 weeks	$14,500.00	$29,000.00
2	Ea	138Kv 1200 amp Line Disconect Switches w/out Operators 3 Phase	24-26 weeks	$12,000.00	$24,000.00
1	Ea	138Kv Circuit Switcher (40Ka Interupting rating)	22-24 weeks	$67,500.00	$67,500.00
1	Ea	138Kv Surge Arrestor 131KV MCOV	18-20 weeks	$2,500.00	$2,500.00
1	Ea	138Kv 650 KV Bil CCVT	20-22 weeks	$9,000.00	$9,000.00
1	Ea	138/13.8Kv 15MVA Transformer	26-28 weeks	$625,000.00	$625,000.00
			Total		**$888,286.00**

[redacted]

11/30/2009

Link, Nicholas

From: [redacted]
Sent: Thursday, November 19, 2009 4:55 PM
To: Link, Nicholas
Cc: Bromley, Pat
Subject: Re: Tenaska 138kV Transmission Line
Attachments: [redacted] LD PoleCatalog.pdf

Categories: Orange Category, Green Category

Nick,

The following details a LD1 75' galvanized pole. You can refer to our LD Pole Catalog for information on all wood pole equivalents. Please keep in mind that steel prices are dynamic both for the steel and the zinc involved in the galvanizing process. Since you said this project will probably not take place until a year from now I used &1.80/lb for the budgetary number, six weeks ago I was using $1.60/lb for galvanized budgetary pricing. Basically, I tried to build some steel increase into the price, but keep in mind that steel is at extremely low prices currently and I don't know where steel prices will be a year from now. We do expect steel prices to remain steady through Q1 2010. Let me know if you have any comments or questions. Thanks.

LD1 75' pole (galvanized) - 2043 lbs. @ $1.80 = $3677
Total for 23 - LD1 75' poles (galvanized) = $84,571

[redacted]

>>> "Link, Nicholas" <nlink@patrickesi.com> 11/18/2009 10:07 AM >>>

[redacted]

This email is to follow up with the voicemail I left you this morning.
The client would like a budgetary estimate (+/- 25%) of the cost of materials for a 1.25 mile 138kV single circuit transmission line for backup/construction power.

I need an estimate of the cost for 23 – class one wood equivalent poles. The poles will be 75 foot long with direct imbed foundation.

I realize that prices are budgetary and that the final cost will be dependent upon final load trees and other factors.

We would like the estimate by the end of day November 20th. If you have any questions or concerns about the estimate please feel free to contact me.
Thanks,

Link, Nicholas

From: [redacted]
Sent: Friday, November 20, 2009 3:44 PM
To: Link, Nicholas
Subject: FW: Tenaska 138kV Construction Power line
Attachments: Construction route.gif

Importance: High

Categories: Orange Category, Green Category

Nicholas;
Please see prices below. I am still waiting for a transformer price.

Best Regards

*** PROPRIETARY, CONFIDENTIAL OR PRIVILEGED COMMUNICATION ***
This communication may contain proprietary, privileged or confidential information protected by law. It is solely for the use of the intended recipient named above. Any review, dissemination, distribution, forwarding, or copying of this communication by someone other than the intended recipient, or the employee responsible for delivering this communication to the intended recipient, is prohibited. If you have received this communication in error, please immediately notify the sender via email, then destroy the original message.

Please consider the environment before printing this email

From: Link, Nicholas [mailto:nlink@patrickesi.com]
Sent: Tuesday, November 17, 2009 3:19 PM
To: [redacted]
Cc: Bromley, Pat
Subject: Tenaska 138kV Construction Power line

[redacted]
This email is to follow up with our phone call this afternoon.

The client would like a budgetary estimate (+/- 25%) of the cost of materials for a 1.25 mile 138kV transmission line for backup/construction power. Attached is a screen shot of the route depicted by the pink line. The location of the site is Taylorville, IL.

The Poles are direct imbed wood poles approximately 75' in length. The line will be single circuit (3 phases) with post insulators on the 19 tangent structures and strain insulators on the 4 dead ends. The dead ends will be guyed. The conductor that is being utilized is "Hawk." The shield wire will be 24 fiber OPGW.
Along half the line there is existing distribution power that will need to be attached to the poles.

Materials that will be needed are:

20,200 ft "Hawk" conductor
6,800 ft 24 Fiber OPGW **$1.25/ft.**
60 138kV post insulators (w/ attachment assembly) $331./ea
25 Shield wire attachment assemblies **$75./ea**
18 138kV Strain insulators (w/ attachment assembly) $ 14.90/ea
400 ft of 8ft tall fence for substation equipment area

Equipment that will be needed are:

2- 138kV, 1200A Disconnect switches
2- 138kV, 1200A Line disconnect switches
1- 138kV Circuit Switcher (40kA interrupting rating)
1- 138kV Surge Arrester 131kV MCOV
1- 138kV, 650 kV BIL CCVT **$7000.**
1- 138/13.8kV 15MVA Transformer (8% impedance) **750,000./ea**

The client would like a cost estimate for the above materials and equipment. We would like the estimate by the end of day November 20th.

If you have any questions or concerns about the estimate please feel free to contact me.
Thanks,

Nicholas Link
Staff Civil Engineer
PATRICK
ENERGY SERVICES
39500 Orchard Hill Place
Suite 200
Novi, MI 48375
Direct: (248) 319-0743
Main: (248) 319-0700
Fax: (248) 319-0701
nlink@patrickesi.com

QUOTATION

Q178736

EFFECTIVE: 19NOV2009
EXPIRY: 29NOV2009
PRINTED: 19NOV2009
PAGE: 1

20186

PROJECT REFERENCE: PATRICK ENERGY SERVICES - ILLINOIS JOB

From:

[redacted]

TEL: 540-347-2839
FAX: 540-347-5338
EMAIL: [redacted]

To:

ATTENTION: KW - SARA
PATRICK ENERGY SERVICES
10 NORTH HILL DR. WARRENTON VA 20186
TEL:
FAX:
EMAIL: KATHY.GAY@NEXANS.COM

PRICE: ** FIRM EXCEPT FOR METALS **

BASE PRICE: AL USD $ 90.5500/CLB

TERMS: NET 30 DAYS
FOB: DESTINATION

QUOTED LEAD TIMES AND STOCK AVAILABILITY ARE SUBJECT TO CHANGE AND MUST BE CONFIRMED AT TIME OF ORDER.

NOTES:

* BUDGETARY QUOTE *
>> ORDER ACCEPTANCE IS SUBJECT TO CREDIT APPROVAL <<

Item	Product	Quantity	Price	Net Amount
1	621656 477.0 ACSR 26/7 "HAWK" ASTM B232 PACKAGING: NR 60X28 ALUM ASSOC REEL QTY: 4x5775 FT AL FACTOR: 0.6987 LB/LB SHIP FROM: NEXANS LOUISVILLE WAREHOU AVAILABILITY: STOCK SUBJECT TO PRIOR SALE GROSS WEIGHT: 16592 LB NOTES: QUOTING EVEN MULTIPLE OF STOCK PUT UP: 3795#/REEL = APPROX 5775 FT.	23100 FT	808.55 /MFT	18677.51 USD
	TOTAL: GROSS WEIGHT: 16592 LB		USD $	18677.51

NOTES:

All sales are subject to credit department approval.

If prices are [redacted], Aluminum is subject to adjustment on the day of shipment based on the monthly average metal price as published in "Platts Metals Week" for the month preceeding the month of shipment. Copper is subject to adjustment on the day of shipment based on the prior day's noon [redacted] closing price as published on the NYMEX.

If prices are FIRM then valid for number of days stated above.

Delivery as shown: if material is to be manufactured, number of weeks given is ex-plant based on current plant loading and is to be confirmed upon receipt of order.

Freight: Prepaid and allowed for each shipment > 5000 lbs.
or
Prepaid and charged or collect for each shipment < 5000 lbs.

Rates for prepaid and charge shipments are based on the 1999 CZAR Lite Tarriff with a 70% discount.

Orders of 5,000 lbs net weight or more for shipment to one destination at one time from one shipping point will be F.O.B. purchaser's destination anywhere within the continental United States only (excluding Alaska and Hawaii)

Accessories for AFL OPGW

[redacted]

Ref: ***EE09-23657*** *Specification Number:* ***DNO-5484***

Lead Time: 5 - 7 Weeks ARO

Quantity	Item Description	Part Number	Unit Price
44	**Deadend** Used at the terminal structures and structures with line angle changes over 30 degrees. The part number and price shown are for a single deadend (tension) located on one side of the structure.	**ODE12/62552G7**	$202.17
44	**10 inch Link Plate** For use with bolted deadend.	**ODELP10**	$19.10
44	**Anchor Shackle**	**ANSH30L**	$4.03
44	**Chain Link**	**CL-4**	$6.03
51	**Suspension** For structures with line angle changes up to and including 30 degrees	**SUME528/555**	$60.97
51	**Y-Clevis Eye 90 for Single Suspension**	**YC90E-750-1750**	$14.11
95	**Bonding Wire Assembly** Used for grounding deadends and suspensions to towers. 60" long, Two ½" terminals with hardware included for one side. Other variations are available. Contact AFL for additional information.	**BWAL50/50H-60**	$21.18
107	**Vibration Damper**	**OVD461/570**	$22.68
95	**1 Bolt Ground Clamp** Customer to specify diameter of grounding tap diameter ("YYY") in decimal inches.	**OBCF2YYY1**	$14.51
50	**Down Lead Clamp** Part number shown assumes the use of same size cable in both grooves. Different cable diameters can be used and will require a different part number.	**FDOA-B5B5**	$23.56
50	**Down Lead Clamp with Banding Adapter** Part number shown assumes the use of same size cable in both grooves. Different cable diameters can be used and will require a different part number.	**FDOA-B5B5A**	$23.54
50	**Down Lead Clamp with Lattice Web Adapter** (for web thicknesses up to 0.75") Part number shown assumes the use of same size cable in both grooves. Different cable diameters can be used and will require a different part number.	**FDOA-B5B5B**	$23.54
50	**Down Lead Clamp with Lattice Web Adapter** (for web thicknesses between 0.75" and 1.25") Part number shown assumes the use of same size cable in both grooves. Different cable diameters can be used and will require a different part number.	**FDOA-B5B5C**	$27.71
50	**Down Lead Clamp with Lag Bolt** Part number shown assumes the use of same size cable in both grooves. Different cable diameters can be used and will require a different part number.	**FDOA-B5B5D**	$18.22
18	**Splice Protector Sleeve - 60 mm length** Supplied in packages of ten (10).	**SPS60**	$11.80
6	**Splice Enclosure** Includes trays for up to 72 fibers	**SB01-72**	$565.46
10	**Connector Kit for OPT-GW Cable** Dielectric cable connector kits, if required in addition to OPT-GW connectors, to be ordered separately.	**OCK12/62552**	$47.93

Quantity	Item Description	Part Number	Unit Price
2	**Connector Kit for Loose Tube Cable** Specify diameter of loose tube cable ("XXX") in decimal inches, center strength member diameter ("YYY") in decimal inches.	**LCKXXXYYY**	$52.27
6	**Coil Bracket for SBO1 and Opti-Guard** OPT-GW and ADSS Storage bracket	**CB-44**	$189.00
6	**Comealong** Comealongs are not intended for use as deadends and are not recommended to hold conductors at sag and tension limits for longer than 6 hours. Maximum tension limit is 50% of the rated breaking strength of the OPT-GW ro 5,000 pounds, whichever is smaller.	**OCA550/559**	$391.04

Quantities are based on the following assumptions:

Total Quantity (feet)	70,700
Average Ruling Span (feet)	1,000
Average Reel Length (feet)	15,000
Average Tower Height (feet)	75

QUOTATION

REFERENCE: EE09-23657.0

WE ARE PLEASED TO SUBMIT THE FOLLOWING QUOTATION AT TODAY'S PRICES BASED ON THE QUANTITIES INDICATED BEING RELEASED FOR MANUFACTURE AND SHIPMENT AT ONE TIME, SUBJECT TO PARAGRAPH 1 OF THE TERMS AND CONDITIONS. FOR A COPY OF OF THESE TERMS AND CONDITIONS, PLEASE VISIT OUR WEBSITE AT [redacted] OR CALL [redacted]

PAYMENT TERMS: ***UNLESS OTHERWISE NOTED*** **NET CASH 30 DAYS FROM DATE OF INVOICE, SUBJECT TO THE APPROVAL OF [redacted] TREASURER.**

[redacted]

FOB	FOB Plant, PPD and ADD
SHIPMENT ESTIMATE	See Below
PACKING	

Line Number	Product Identification	Quantity	Unit Price (US Dollars)	Extended Price (US Dollars)
01	Item: DNO-5484	21,550 meters 70,701 feet	6.234/m 1.900/ft	134,340.34
	AC-12/62/552 OPT-GW Cable with 24 Single-mode fibers			
	Wood reels with flex-wrap			
	Lead Time: 8-10 weeks ARO			
	Max length on wood reels: 6560 meters			
	Max length on non-returnable steel reels: 7000 meters		1,250 /reel	
			TOTAL	134,340.34

PLEASE NOTE THE FOLLOWING:

Unless otherwise noted , the billable tolerance for OPT-GW items is -0%, +2%.

Ordered lengths should include a distribution of lengths. All reels cannot be ordered at the maximum nor all at the same length. A typical length distribution would be:
6000m – 7000m ~ 15%
4500m – 6000m ~ 55%
2500m – 4500m ~ 25%
<2500m ~ 5%

Lead times quoted are estimates only, and are based on receipt of a valid purchase order and drum lengths. Actual lead time may vary due to availability of raw materials or plant loading at time of order receipt.

For OPT-GW items, orders with shipping lengths less than 1 km are subject to an additional cutting charge of $200 per cut.

For ADSS, Loose Tube and OPT-GW items, prices shown are for the quantities quoted. Minimum order is 1km for manufactured items and 300 meters for inventory items.

[redacted] recommends purchasing steel reels for long-term storage. Please refer to [redacted] Reel Handling document available at [redacted] for additional handling and storage details.

QUOTATION

REFERENCE: EE09-23657.0

WE ARE PLEASED TO SUBMIT THE FOLLOWING QUOTATION AT TODAY'S PRICES BASED ON THE QUANTITIES INDICATED BEING RELEASED FOR MANUFACTURE AND SHIPMENT AT ONE TIME, SUBJECT TO PARAGRAPH 1 OF THE TERMS AND CONDITIONS FOR A COPY OF OF THESE TERMS AND CONDITIONS, PLEASE VISIT OUR WEBSITE AT [redacted] OR CALL [redacted]

PAYMENT TERMS: ***UNLESS OTHERWISE NOTED*** **NET CASH 30 DAYS FROM DATE OF INVOICE, SUBJECT TO THE APPROVAL OF [redacted] TREASURER.**

[redacted]	FOB FOB Plant, PPD and ADD
	SHIPMENT ESTIMATE **See Below**
	PACKING

Line Number	Product Identification	Quantity	Unit Price (US Dollars)	Extended Price (US Dollars)

NOTE. THIS QUOTATION IS NEITHER A CONTRACT NOR AN OFFER ALL ORDERS ARE SUBJECT TO ACCEPTANCE BY [redacted] AT ITS PRINCIPAL OFFICE IN SPARTANBURG, SOUTH CAROLINA. ORDERS RESULTING FROM THIS QUOTATION WHICH ARE ACCEPTED WILL BE SUBJECT TO THE TERMS AND CONDITIONS OF THIS QUOTATION.

DATE
16-Oct-09

QUOTATION VALID THROUGH
18-Nov-09

[redacted]

BY

[redacted]

Specification DNO-5484

AlumaCore Optical Ground Wire

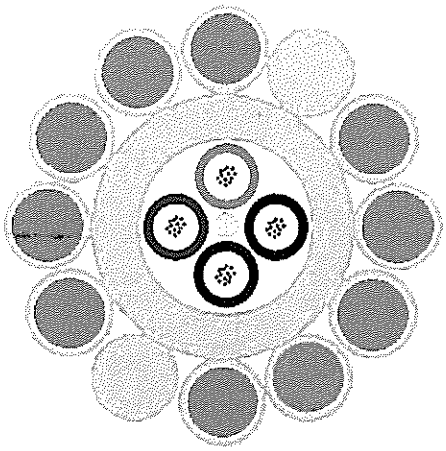

AC-12/62/552

Component Details					
Component	**#**	**OD**		**Area**	
CENTER					
Aluminum Pipe	1	8.42 mm	0.3315 in	33.62 mm²	0.0521 in²
LAYER 1 - LEFT HAND LAY					
Aluminum Clad Steel (20.3% IACS)	10	2.80 mm	0.1102 in	61.58 mm²	0.0954 in²
Aluminum Alloy 6201	2	2.80 mm	0.1102 in	12.32 mm²	0.0191 in²

Standards	
Designed and Manufactured in accordance with the following:	
Cable	*IEEE 1138, IEC 60794-4*
Fiber	*IEC 60793, ITU-T G.65x Series*
Color Code	*ANSI/EIA 359-A, 598-A, IEC 60304*
Aluminum Pipes	*ASTM B483*
Aluminum Alloy Wires	*ASTM B398, IEC 60104*
Aluminum Clad Steel Wires	*ASTM B415*

Specification DNO-5484

Mechanical / Electrical Details		
Calculated Breaking Load	8,440 kg	18,606 lbs
Maximum Cable Design Tension	6,372 kg	14,049 lbs
Approximate Cable Diameter	14.02 mm	0.552 in
Total Cross-Sectional Area	107.51 mm^2	0.1666 in^2
Approximate Cable Weight	553 kg/km	1,962 lbs/mile
Modulus of Elasticity	11,893 kg/mm^2	16,915 kpsi
Coefficient of Linear Expansion	1.51E-05 1/°C	8.39E-06 1/°F
Sag10™ Chart Number	1-1166	1-1166
Calculated DC Resistance (20°C)	0.4516 Ohms/km	0.7268 Ohms/mile
Short Circuit Rating	87 $(kA)^2$•sec	87 $(kA)^2$•sec
Short Circuit Ambient Temperature	40 °C	104 °F
Short Circuit Duration 1 sec	9.3 kA	9.3 kA
Short Circuit Max Cable Temperature	210 °C	410 °F

Optical Details

Attenuation Characteristics for Single-mode Fiber

Max Individual

0.40 dB/km 1310 nm
0.30 dB/km 1550 nm

24 Fiber Loose Tube Design (4 - 6 fiber units)		
Unit	**Fiber Type**	**Fiber Count**
Blue	Single-mode	6
Orange	Single-mode	6
Green	Single-mode	6
Brown	Single-mode	6
	Total Fiber Count	24

Standard Fiber Color Code

Fiber	1	2	3	4	5	6	7	8	9	10	11	12
Color	Blue	Orange	Green	Brown	Slate	White	Red	Black	Yellow	Violet	Rose	Aqua

Designs with more than 12 fibers per tube will use the standard color code and binders for identification of the fibers.

Installation and Handling Recommendations

Installation and cable preparation procedures are outlined in the [redacted] documents listed below. Contact [redacted] to request copies.

Recommended Installation Procedures for Composite Optical Ground Wire

Installation Instructions for Installing Optical Ground Wire in an [redacted] *Splice Enclosure*

Fiber Optic Cable Receiving, Handling and Storage. Document ACS-WI-809

Specification DNO-5484

Quick Reference Installation Notes		
Approximate Cable Diameter	14.02 mm	0.552 in
Maximum Stringing Tension (at tensioner)*	1,688 kg	3,721 lbs
Minimum Bull Wheel Diameter	99 cm	39 in
Stringing Sheave Diameter**	56 cm	22 in
Minimum Bending Radius		
Cable		
Static (No load)	21 cm	9 in
Dynamic (under tension)	28 cm	11 in
Fiber		
Static (No load)	3.8 cm	1.5 in
Buffer Tube		
Static (No load)	8.0 cm	3.0 in

* - The stringing tension is always measured at the tensioner side. In general the maximum stringing tension should be approximately half of the maximum sagging tension and should never exceed 20% RBS of the OPT-GW.

** - The value indicated is for the first and last structures of the pull and is based on 40 times the diameter of the OPT-GW. Smaller diameters can be used at tangent structures. Reference [redacted] installation instructions for more details.

Reference [redacted] "Recommended Installation Procedures for Composite Optical Ground Wire" for detailed installation instructions.

Shipping Reels

Reel Type	FL (cm)	TR (cm)	DR (cm)	OW (cm)	Tare (kgs)	FL (in)	TR (in)	DR (in)	OW (in)	Tare (lbs)	Capacity (meters)	Capacity (feet)
Wood	147	81	71	97	200	58	32	28	38	441	4,460	14,630
Wood	168	91	91	107	260	66	36	36	42	573	6,000	19,680
Wood	183	91	91	107	300	72	36	36	42	662	6,560	21,520
Wood	213	86	89	104	385	84	34	35	41	849	6,560	21,520
Steel	152	81	81	97	345	60	32	32	38	761	4,420	14,500
Steel	183	91	102	107	540	72	36	40	42	1,191	7,000	22,960
Steel	213	114	107	130	773	84	45	42	51	1,704	7,000	22,960

FL - Flange Diameter; TR - Inside Traverse Width; DR - Drum Diameter; OW - Outside Overall Width

Arbor Hole Diameter: Wood: 3-1/4in (7.9cm)
Steel: 3in (7.6cm)

Maximum lengths shown are the longest lengths that [redacted] offers. Longer lengths may be possible.

Ordered lengths should include a distribution of lengths, i.e., all reels cannot be ordered at the maximum. A typical reel length distribution is as follows:

6000m – 7000m ~ 15% of reels
4500m – 6000m ~ 55% of reels
2500m – 4500m ~ 25% of reels
<2500m ~ 5% of reels

Wood reels with flex-wrap covering are standard. Non-returnable steel reels and/or wood lagging are available upon request. Additional reel sizes may be available upon request.

Steel reels are recommended for long term storage. Reference [redacted] "Fiber Optic Cable Receiving, Handling and Storage" document for additional information.

Specification DNO-5484

Electrical Characteristics			
Composite DC Resistance	[20°C]	0.4516 Ohms/km	0.7268 Ohms/mile
Geometric Mean Radius		0.55 cm	0.0179 feet
Inductive Reactance	[60 Hz frequency]	0.3033 Ohms/km	0.4881 Ohms/mile
[one foot (0.3048 meter) spacing]			
	[50 Hz frequency]	0.2527 Ohms/km	0.4067 Ohms/mile
Capacitive Reactance	[60 Hz frequency]	0.1801 MOhms·km	0.1119 MOhms·mile
[one foot (0.3048 meter) spacing]			
	[50 Hz frequency]	0.2161 MOhms·km	0.1343 MOhms·mile

Composite Coefficient of Thermal Resistance 0.00366 (1/°C)

Temperature		DC Resistance		AC Resistance	
(°C)	(°F)	(Ohms/km)	(Ohms/mile)	(Ohms/km)	(Ohms/mile)
20	68	0.4516	0.7268	0.4606	0.7413
25	77	0.4599	0.7401	0.4691	0.7549
30	86	0.4681	0.7534	0.4775	0.7684
35	95	0.4764	0.7666	0.4859	0.7820
40	104	0.4846	0.7799	0.4943	0.7955
45	113	0.4929	0.7932	0.5027	0.8091
50	122	0.5011	0.8065	0.5112	0.8226
55	131	0.5094	0.8198	0.5196	0.8362
60	140	0.5177	0.8331	0.5280	0.8497
65	149	0.5259	0.8464	0.5364	0.8633
70	158	0.5342	0.8597	0.5449	0.8769
75	167	0.5424	0.8730	0.5533	0.8904
80	176	0.5507	0.8862	0.5617	0.9040
85	185	0.5589	0.8995	0.5701	0.9175
90	194	0.5672	0.9128	0.5785	0.9311
95	203	0.5755	0.9261	0.5870	0.9446
100	212	0.5837	0.9394	0.5954	0.9582
105	221	0.5920	0.9527	0.6038	0.9717
110	230	0.6002	0.9660	0.6122	0.9853
115	239	0.6085	0.9793	0.6207	0.9989
120	248	0.6167	0.9926	0.6291	1.0124
125	257	0.6250	1.0058	0.6375	1.0260
130	266	0.6333	1.0191	0.6459	1.0395
135	275	0.6415	1.0324	0.6543	1.0531
140	284	0.6498	1.0457	0.6628	1.0666
145	293	0.6580	1.0590	0.6712	1.0802
150	302	0.6663	1.0723	0.6796	1.0937

Specification DNO-5484

PLS-CADD Inputs

☐ Use simplified elastic cable model (no creep, no coefficient)

Name

Description [redacted] OPGW DNO-5484 AC-12/62/552

Cross section area (in^2) 0.1666 Unit weight (lbs/ft) 0.372

Outside diameter (in) 0.552 Ultimate tension (lbs) 18,606

Temperature at which strand data below obtained (deg F) 70

Number of independent wires 1

(above should be 1 unless cables are separated by spacers)

Outer Strands

Final Modulus of elasticity (psi/100) 22000

Thermal expansion coeff. (/100 deg) 0.001280

Polynomial coefficients (all strains in %)

	A0	A1	A2	A3	A4
Stress-strain	-77.1	27658.7	-30993.3	-36131	64018
Creep	-77.1	27658.7	-30993.3	-36131	64018

Core Strands (if different from outer strands)

Final Modulus of elasticity (psi/100) 160000

Thermal expansion coeff. (/100 deg) 0.000640

Polynomial coefficients (all strains in %)

	A0	A1	A2	A3	A4
Stress-strain	614.5	141862.3	91338.6	-298530	200314
Creep	3378	93505.4	256968.4	-488551	262053

Thermal Rating Properties

Resistance at two different temperatures

Resistance (Ohm/mile) 0.7401 at (deg F) 77

Resistance (Ohm/mile) 0.8730 at (deg F) 167

Emissivity coefficient 0.5

Solar absorption coefficient 0.5

* Outer strands heat capacity (Watt-s/ft-deg F)

* Core heat capacity (Watt-s/ft-deg F)

Generate Coefficients from points on stress-strain

OK Cancel

* These two fields do not need to be entered for OPGW - intentionally left blank.

[redacted]

Date	Page
Nov 20, 2009	1

Order Number
QT009355

Quote Valid To
12/20/2009

Quotation

Sold To:

Patrick Energy Services

NAME: Tenaska

DELIVERY DATE: 6-8 Weeks ARO

Reference	Delivery Terms	Payment Terms
Quote #kw1017	Delivered	NET 30 DAYS

Qty. Ord.	Item Number	Description	Unit Price	UOM	Extended Price
18	KL138HBS34	138 kV Sil Rubber Trans Susp Ball/Socket Section Length 54.5" Leakage Distance 149.3"	109.20	ea	1,965.60
60	KL138ASHG31	138 kV Sil Rubber Hor LP w/ Gain Base Section Length 60.9" Leakage Distance 142.6"	345.70	ea	20,742.00

NOTATIONS:

Budgetary quote
Drawings included.

Subtotal	22,707.60
Total sales tax	0.00
Total order	22,707.60
	USD $

[redacted]

Per:_____

Distribution: Original - Customer **** Copy - File

138kV BALL-SOCKET TRANSMISSION SUSPENSION INSULATOR (34 SHEDS)

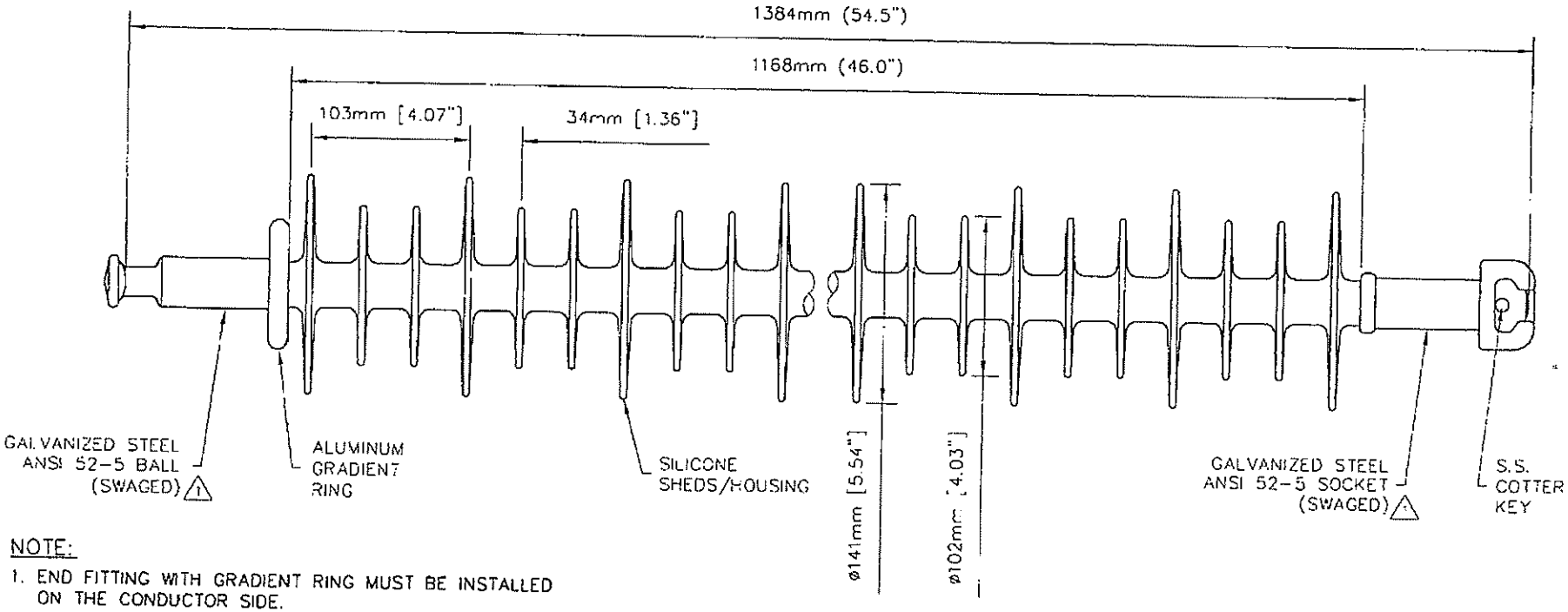

NOTE:

1. END FITTING WITH GRADIENT RING MUST BE INSTALLED ON THE CONDUCTOR SIDE.

TECHNICAL DATA 1

RECOMMENDED VOLTAGE RATING kV	DRY ARC DISTANCE mm (in)	LEAKAGE DISTANCE mm (in)	POSITIVE CRITICAL IMPULSE kV		LOW FREQUENCY FLASHOVER kV		LOW FREQUENCY WITHSTAND kV		SPECIFIED MECHANICAL LOAD (SML) kN (lbs.)
			FLASHOVER	WITHSTAND	DRY	WET	DRY	WET	
138	1227 (48.3)	3792 (149.3)	785	745	490	400	465	370	120 (27,000)

SUBJECT TO STANDARD CONDITIONS OF SALE

CAT. No.	REV.	DATE	ECO	APPD.
KL138HBS34	1	NOV. 8/05	492	jm

138kV LINE POST INSULATOR WITH HORIZONTAL TRUNNION & GAIN BASE (31 ALTERNATE SHEDS)

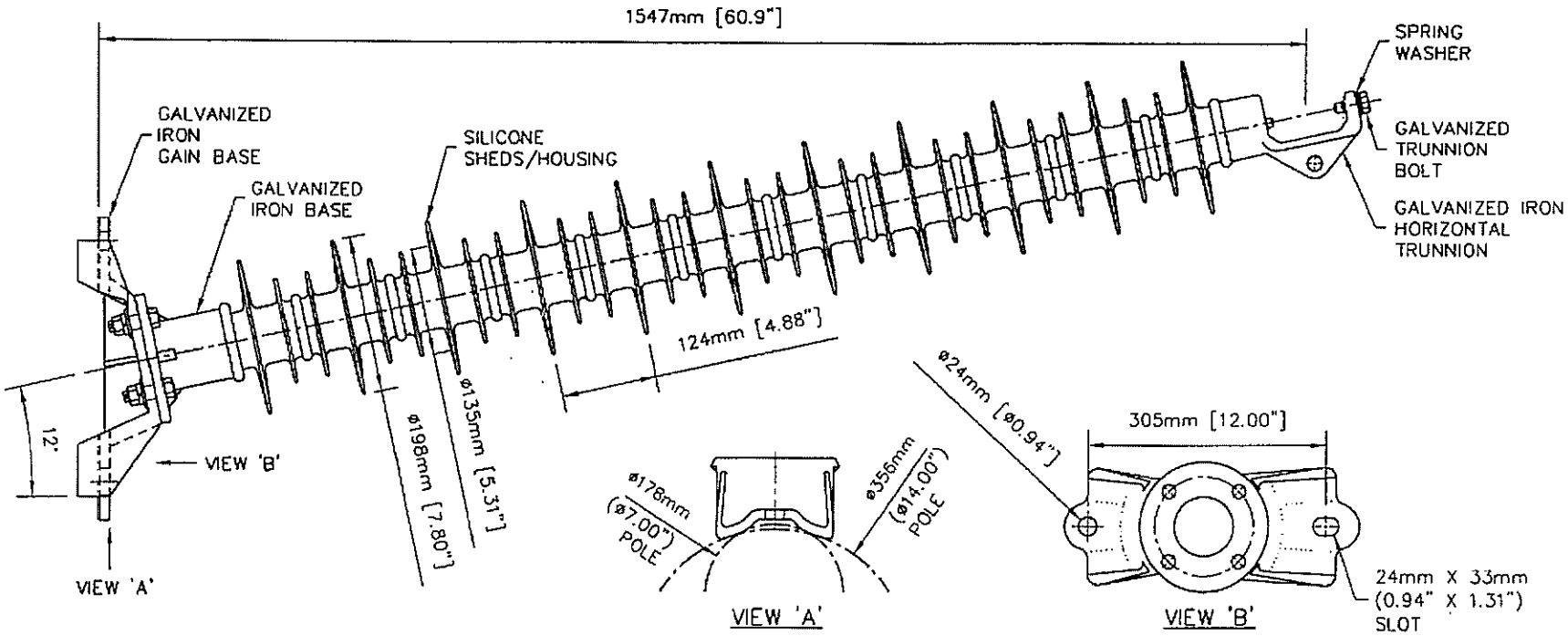

TECHNICAL DATA

RECOM-MENDED VOLTAGE RATING kV	DRY ARC DISTANCE mm (in)	LEAKAGE DISTANCE mm (in)	POSITIVE CRITICAL IMPULSE kV		LOW FREQUENCY FLASHOVER kV		LOW FREQUENCY WITHSTAND kV		RADIO INFLUENCE AT 1000kHZ		SPECIFIED CANTILEVER LOAD (SCL)	MAX. DESIGN CANTILEVER LOAD (MDCL)	SPECIFIED TENSILE LOAD (STL)
			FLASHOVER	WITHSTAND	DRY	WET	DRY	WET	TEST kV	MAX µV	kN (lbs.)	kN (lbs.)	kN (lbs.)
138	1361 (53.6)	3622 (142.6)	805	765	520	450	495	425	80	1.32-66	12.0 (2700)	6.0 (1350)	45 (10,000)

[redacted]

SUBJECT TO STANDARD CONDITIONS OF SALE

CAT. No.	REV.	DATE	CHKD.	ECO	APPD.
KL138ASHG31	1	FEB. 7/06	P.H.	362	Sm

Link, Nicholas

From: [redacted]
Sent: Monday, November 23, 2009 12:03 PM
To: Link, Nicholas
Subject: FW: TENASKA BUDGET PRICING

Categories: Orange Category, Green Category

Nicholas,

Here is the budget pricing for the transformer.

From: [redacted]
Sent: Monday, November 23, 2009 12:00 PM
To: [redacted]
Cc: [redacted]
Subject: TENASKA BUDGET PRICING

BUDGET $312,000
22 WEEK
SHIP FACTORY PICKUP
(1) 15/20/25 13800D-13800Y DETC
[redacted]

CONFIDENTIALITY NOTICE: The information in this e-mail message, including all replies or forwarded messages connected herewith, is confidential, may be legally privileged, and is intended only for the use of the intended recipient(s). If you, the reader of this message, are not an intended recipient hereof, you are hereby notified that you should not further disseminate, distribute, or forward this e-mail message. If you have received this e-mail message in error, please notify the sender as soon as possible by return e-mail message or by telephone at [redacted] In addition, please delete the erroneously received message and any reply from your system and any device/media where the message is stored.

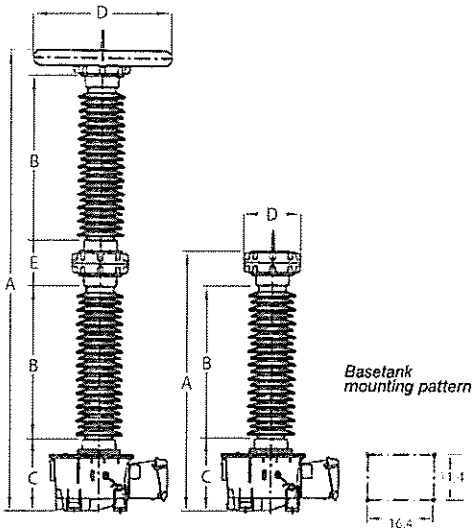

DIMENSIONS

The following dimensions refer to standard versions.
Other requirements affect dimensions and weights.

DIMENSIONS										
Maximum system voltage (V_m)		kV	72.5	123	145	170	245	362	550	765
Impulse test voltage (BIL)		kV	350	550	650	750	1050	1300	1800	2100
OTCF	Creepage distance	in	63.7	115.9	139.1	170.6	231.8	341.3	512.0	-
... SR	Dimensions in	A	50.5	64.9	73.1	82.2	113.4	147.9	213.7	-
... SI		B	22.8	37.2	45.3	54.4	37.2	54.4	53.2	-
... II		C	19	19	19	19	19	19	19	-
... IR		D	14	14	14	14	25.5	34	34	-
		E	-	-	-	-	11.2	11.2	2x11.2	-
	Total weight (approx.)	pound	407.8	496	504.8	542.3	736.3	811.3	1.078.0	-
	Weight of oil (approx)	gal	7.9	8.1	8.7	8.9	10.5	11.8	15	-
OTCF	Creepage distance	in	63.7	115.9	139.1	170.6	231.8	223.2	512	-
... IM	Dimensions in	A	52	66.3	74.5	83.6	114.8	149.3	215.1	-
... SM		B	22.8	37.2	45.3	54.4	37.2	54.4	54.4	-
		C	20.5	20.5	20.5	20.5	20.5	20.5	20.5	-
		D	14	14	14	14	25.5	34	34	-
		E	-	-	-	-	11.2	11.2	2x11.2	-
	Total weight (approx.)	pound	575.4	668	676.8	712.0	906	981	1247.8	-
	Weight of oil (approx.)	gal	11.8	12.9	13.2	13.4	15	16.3	19.5	-
OTCF	Creepage distance	in	62.9	109.2	134.6	172.0	216.9	344	516.1	688.1
... ER	Dimensions in	A	51.8	66.2	74.2	84.7	116.3	153.3	221.8	290.4
		B	22.8	37.2	45.1	55.7	36.4	55.7	55.7	55.7
		C	20.2	20.2	20.2	20.5	20.2	20.2	20.2	20.2
		D	17.5	17.5	17.5	17.5	25.5	34	34	40
		E	-	-	-	-	12.8	12.8	2x12.8	3x12.8
	Total weight (approx.)	pound	524.7	610.6	709.8	826.7	970.0	1384.5	1935.6	2491.2
	Weight of oil (approx.)	gal	10	11.6	12.6	14	17.4	22.1	30.1	38.3
OTCF	Creepage distance	in	62.9	108.4	134.6	172	216.9	344	516.1	688.1
... EM	Dimensions in	A	53.3	67.6	75.6	86.1	117.7	154.7	223.3	291.8
		B	22.8	37.2	45.1	55.7	37.2	55.7	55.7	55.7
		C	21.6	21.6	21.6	21.6	21.6	21.6	21.6	21.6
		D	17.5	17.5	17.5	17.5	34	34	34	40
		E	-	-	-	-	12.8	12.8	2x12.8	3x12.8
	Total weight (approx.)	pound	694.4	780.4	879.6	996.4	1139.7	1554.2	2105.4	2660.9
	Weight of oil (approx.)	gal	14.5	16.1	17.1	18.4	21.9	26.6	34.6	42.7

Indicative value only - All dimensions must be confirmed with order.

[redacted]

On August 1, 2006, [redacted] High Voltage became part of [redacted]
[redacted] Instrument Transformers equipment portfolio now includes [redacted] High Voltage's extensive range.
If you require any further information, please address your inquiries to :
[redacted]

Products-L3-OTCF_ANSI-71508_V1_EN - © [redacted] 2008, [redacted], the [redacted] logo and any alternative version thereof are trademarks and service marks of [redacted]
All trade names or trademarks mentioned herein whether registered or not, are the property of their owners. - 38919/1982 RCS PARIS
Our policy is one of continuous development. Accordingly the design of our products may change at any time. Whilst every effort is made to produce up to date literature, this brochure should only be regarded as a guide and is intended for information purposes only. Its contents do not constitute an offer for sale or advise on the application of any product referred to in it. We cannot be held responsible for any reliance on any decisions taken on its contents without specific advice.

November 20, 2009

Re: Tenaska 138kV Construction Power line

[redacted] Reference: IL-USC-09287/1

Thank you for your interest in [redacted]. for your Power Circuit Switcher needs. We have received your inquiry and are pleased to submit the following proposal in accordance with the noted comments and clarifications. We are proposing our GL 312 which is part of the [redacted] family of circuit switchers.

[redacted] is a leading manufacturer of high voltage circuit switchers with R&D and manufacturing facilities located in Charleroi, Pennsylvania. Our facility is an [redacted] Center of Excellence for research and development, testing, and manufacturing of dead tank circuit switchers for worldwide distribution and is certified to ISO9001-2000 and ISO14001-2004.

Our Charleroi, PA campus includes a fully functional research & development facility with a staff of over 20 engineers and technicians dedicated to product development. This local development team ensures that new products are designed to meet the rigorous demands of the US power system. The [redacted] R&D team also includes worldwide development with R&D centers in Kassel, Germany and Villeurbanne, France. The present production capacity of our Charleroi factory is nearly 1,500 circuit switchers per year and we are adding additional capacity in remaining months of 2009 and into 2010.

The [redacted] line of circuit switchers are developed with a family approach. Common components such as mechanisms and interrupters are shared between the dead tank and circuit switcher products providing a reduction in cost of ownership. Furthermore, our switchers are tested to ensure significant Close-Open mechanical operations without maintenance.

[redacted] stands ready to serve you. Our uniquely qualified team includes industry leaders with decades of experience in the transmission and distribution world as well as the high voltage circuit switcher industry. The members of the [redacted] team are available at any time and are dedicated together with our Charleroi staff of nearly 200 employees to providing you best in industry service and support.

We do hope our offer will be of interest to you and look forward to hearing from you in the near future.

Regards,

[redacted]

Item 1

One (1) 138 kV Circuit Switcher without integral disconnect switch in accordance with ANSI/IEEE circuit switcher standards for outdoor installation with mechanical spring operating mechanism, including support structure.

▪ Type	GL 312 Circuit Switcher
▪ Rated maximum voltage	138 kV
▪ Rated nominal voltage	145 kV
▪ Rated system frequency	60 Hz
▪ Rated normal current	1200 A
▪ Rated breaking current	40 kA at -30°C up to +40°C (full switcher applications)
▪ Rated breaking current	31.5 kA at -40°C up to +40°C (transformer switching only)
▪ BIL	650 kV
▪ Insulating medium	SF_6
▪ Interrupting time	3 cycles
▪ High-speed auto-reclosure	3 phase, gang operated
▪ Mechanism	One (Spring/Spring)
▪ Phase spacing	68.9 in (1750mm)
▪ Lowest ungrounded	102 in
▪ Leg spacing	2 at 99.6 in
Price Per Unit:	**$36,500**.- USD, FOB Jobsite, IL

Key Features

- The GL312 is qualified to M2 class for mechanical endurance in accordance with IEC 62271-100. This rating qualifies the GL312 mechanical for **10,000 Close-Open** operations without maintenance.
- The GL312 is qualified to C2 class for capacitor switching in accordance with IEC 62271-100. This rating qualifies the GL312 for switching of capacitive loads with very low probability of re-strike.
- The GL312 circuit switcher share a common interrupter and mechanism design with our DT1-145 type dead tank circuit breaker. This will allows for common components as well as a higher level of familiarity for operational personnel when working on both product types.
- Production and type testing performed in accordance with ANSI/IEEE requirements for circuit switchers.
- Fast three (3) cycle operation for better system performance.
- Standard temperature compensated gas density monitor (WIKA) provides contacts for low gas alarm and lockout functions.
- No paint. All external surfaces are hot dip galvanized steel or aluminum. All external hardware is stainless steel. This provides an external surface that will not fade, chip, peel, or rust.
- Common fill port allows for filling of all three (3) phases at the same time.
- SF_6 gas for the initial filling is included with the circuit switcher.
- Self-sealing type isolation valves are provided on each tank to facilitate the removal of gas from a single tank. Inter-phase gas connections are stainless steel piping.

Spare Parts

We do not recommend any spare parts for start up or the first three years of operation, however, for the purpose of comparison we are giving the price for the following spares:

Item #	Parts Description	GL312 price/unit USD
a	Trip coil	$85.-
b	Close coil	$85.-
c	Motor for spring charging	$425.-
d	SF_6 density monitor (WIKA)	$385.-
e	Set of all necessary gaskets one (1) phase	$275.-
f	Spring charge handle	One (1) included per switcher
g	Set of three (3) aux contacts	$250.-
h	Set of two (2) heaters for mechanism cabinet	$285.-

Prices of spare parts are valid only when they are ordered and delivered together with the circuit switcher. Spares order separately will be subject to shipping charges.

We maintain all necessary spare parts in our stock. For emergency spares, we recommend only items a, b, and c.

Special Tools

No special tools are necessary for installation or maintenance of the switchers. We do recommend, however, having one (1) of each of the following SF_6 handling tools on site:

- Handheld leak detector — $500.- USD
- Gas regulator and fill hose — One (1) set included per substation

The cost of these spare parts and special tools, unless otherwise stated, is not included in the switcher pricing.

Service

Field service is not included in the circuit switcher price identified on the previous page. If the field service option is desired please see the attached quotation for pricing.

Clarifications and Exceptions to the Specification

- Circuit switchers will be built according to [redacted] standard design. If a detailed specification is provided at a later date, [redacted] will review and determine the necessary price adjustments.
- Proposal is subject to [redacted] attached terms and conditions. Attached are [redacted] standard terms and conditions.

General Conditions

Validity	60 days after bid opening
Delivery	Standard delivery on the GL312 circuit switcher is fourteen (14) to eighteen (18) weeks after receipt order, subject to prior factory loading and material availability.
Delivery Note	Delivery is based upon customer return of approved drawings in two (2) weeks. Drawings will be submitted for approval four (4) to six (6) weeks after receipt of order.
Shipping Point:	Charleroi, PA
Terms of delivery:	Pricing is firm in USD, FOB Jobsite, IL (INCOTERMS 2000), destination pre-paid and allowed. Unloading of the circuit switchers is to be provided by others.
Payment Conditions:	100 % NET 30 days after delivery
Instruction manuals:	One instruction book is shipped inside the control cabinet of the switcher. Remaining instruction book will ship within two weeks of switcher shipment.
Warranty:	Twelve (12) months after installation, not to exceed eighteen (18) months after delivery. Warranties exclude wear and tear associated with normal circuit switcher operation, circuit switchers used in special applications not covered by ANSI C37.06, and circuit switchers that have exceeded the maximum allowable cumulated current. Warranties are based on strict accordance with the maintenance instructions found in the switcher manual.
Sales Tax:	This offer does not include any sales tax (state, federal or local).

PATRICK
ENGINEERING

Appendix G

Construction

[redacted]

From: [redacted]
Sent: Friday, November 20, 2009 2:23 PM
To: [redacted]
Cc: [redacted]
Subject: RE: Tenaska 138kV Construction Power line

Categories: Green Category

Here is the break down of the construction estimate you requested

Build 1.25 miles of 138kV T-Line = $160,000
Install Foundations = $60,000
Place Equipment and Build Switch = $120,000
Build Fence = $10,000

Grand Total: $350,000

Assumptions:

- All material except concrete and fence is furnished
- No terminating or wiring to equipment get being placed

[redacted]

The preceding e-mail message (including any attachments) contains information that may be confidential, or constitute non-public information. It is intended only for the designated recipient. If you are not the named addressee, you should not disseminate, distribute or copy this e-mail. If you have received this e-mail by mistake, please notify the sender immediately by replying to this message and delete this e-mail from your system. Use, dissemination, distribution or reproduction of this message by unintended recipients is not authorized and may be unlawful.

Direct: (248) 319-0743
Main: (248) 319-0700
Fax: (248) 319-0701
nlink@patrickesi.com

From: [redacted]
Sent: Tuesday, November 17, 2009 3:49 PM
To: Link, Nicholas
Cc: Bromley, Pat
Subject: RE: Tenaska 138kV Construction Power line

When did you need this by? Could I get it to you by close of business on Friday?

[redacted]
Project Manager
Office [redacted]
Cell [redacted]
E-mail: [redacted]

The preceding e-mail message (including any attachments) contains information that may be confidential, or constitute non-public information. It is intended only for the designated recipient. If you are not the named addressee, you should not disseminate, distribute or copy this e-mail. If you have received this e-mail by mistake, please notify the sender immediately by replying to this message and delete this e-mail from your system. Use, dissemination, distribution or reproduction of this message by unintended recipients is not authorized and may be unlawful.

From: Link, Nicholas [mailto:nlink@patrickesi.com]
Sent: Tuesday, November 17, 2009 1:32 PM
To: [redacted]
Cc: Bromley, Pat
Subject: Tenaska 138kV Construction Power line

[redacted]

This email is to follow up with our phone call this afternoon.
The client would like a budgetary estimate (+/- 25%) of the cost to construct a 1.25 mile 138kV transmission line for backup/construction power. Attached is a screen shot of the route depicted by the pink line.

The Poles are direct imbed wood poles approximately 75' in length (9.5 ft will be buried). The line will be single circuit (3 phases) with post insulators on the 19 tangent structures and strain insulators on the 4 dead ends. The dead ends will be guyed. The conductor that is being utilized is "Hawk." Along half the line there is existing distribution power that will need to be attached to the poles. I have attached a picture of the road that the line will travel along.

Pad foundations (sizes not yet determined) will be needed for:

- 2- Disconnect switches
- 1- 138kV Circuit Switcher
- 1- CCVT
- 1- 138/13.8kV 15MVA transformer

The equipment will be placed in a fenced in area that will need to be constructed.

The client would like a lump sum cost estimate for erecting the structures, stringing the line, constructing foundations, placing equipment, and constructing a fence. They want this to be priced separate from the 345kV line. We would like the estimate by the end of day November 20th.

If you have any questions or concerns about the estimate please feel free to contact me.
Thanks,

Link, Nicholas

From: [redacted]
Sent: Friday, November 20, 2009 1:05 PM
To: Link, Nicholas
Subject: RE: Tenaska 138kV Construction Power line

Categories: Green Category

Nicholas

Our price for the Tenaska 138kV Construction for back/construction power is $362,650.00. This includes construction of the 138kV Line. Grading of site for substation. Installation of foundation for equipment. Grounding on site. Setting of Equipment supplied by others. Connection of equipment. Installation of fence. Stoning of yard.

Thanks
[redacted]

From: Link, Nicholas [mailto:nlink@patrickesi.com]
Sent: Tuesday, November 17, 2009 1:45 PM
To: [redacted]
Cc: Bromley, Pat
Subject: Tenaska 138kV Construction Power line

[redacted]
This email is to follow up with our phone call this afternoon.
The client would like a budgetary estimate (+/- 25%) of the cost to construct a 1.25 mile 138kV transmission line for backup/construction power. Attached is a screen shot of the route depicted by the pink line.

The Poles are direct imbed wood poles approximately 75' in length (9.5 ft will be buried). The line will be single circuit (3 phases) with post insulators on the 19 tangent structures and strain insulators on the 4 dead ends. The dead ends will be guyed. The conductor that is being utilized is "Hawk." Along half the line there is existing distribution power that will need to be attached to the poles. I have attached a picture of the road that the line will travel along.

Pad foundations (sizes not yet determined) will be needed for:
- 138kV Circuit Switcher
- CCVT
- 138/13.8kV 15MVA transformer
- 2- Disconnect switches

The equipment will be placed in a fenced in area that will need to be constructed.

The client would like a lump sum cost estimate for erecting the structures, stringing the line, constructing foundations, placing equipment, and constructing a fence. They want this to be priced separate from the 345kV line. We would like the estimate by the end of day November 20th.

If you have any questions or concerns about the estimate please feel free to contact me.
Thanks,

Nicholas Link
Staff Civil Engineer
PATRICK
ENERGY SERVICES
39500 Orchard Hill Place

CONSTRUCTION ESTIMATE

To: Patrick Engineering **November 20th, 2009**
Attn: Nicholas Link

Project: Tenaska 138kV Line
Labor Only Prices

As requested for budgetary purposes of +/- 25% on 1.25 miles of 138kV line that includes:

1. Installation of 23- 75' Class 1 Penta treated poles direct buried. Quantity includes 19 tangents and 4 dead ends	$34,500 Lot
2. Installation of 1.25 Miles of 3 phase 477 "HAWK" ACSR with Static.	$39,600 Lot
3. Installation of Ground rods. Average 8 rods per structure.	$11,040 Lot
4. Transfer of Distribution	$10,000 Lot
Labor Total	**$95,140.00**

Material:

Poles	$2,596 ea
ACSR HAWK	$1.06 ft
3/8" Steel Static	$0.65 ft
138kV Post Insulator	$632.00 ea
138kV Strain Insulator	$590.00 ea
Misc. Hardware (LOT)	$14,000.00
Shoe, Anchors, Grips, Bolts, Grounding & Connectors	

If we can be of any more assistance or service please do not hesitate to contact us.

Thank you,

[redacted]
President
[redacted]

[redacted]

is please to offer a budgetary estimate of $248,068.00 for the construction of the substation portion of the "Tenaska 138KV Construction Power" project.

The following is included:

Site Work:

- Stripping of topsoil based on a 100'x100' area, 6" deep and spreading the topsoil on the immediate surrounding area.
- Provide and install fill in order to bring the area back to existing grade prior to stripping topsoil.
- Provide stabilization fabric and drive stone to construct a 100' long by 20' wide drive in the fenced area.
- Provide and install a 4" thick layer of 6AA limestone to the non-drive area inside the fence and extending 3' outside the fence.
- Provide and install 400 lnft of 8' high chain link fencing including 7' fabric and three runs of barbed wire and one 20' double swing drive gate.

Foundations:

- Provide and install two foundations for a 138KV pull-off structure based on 9cy of concrete each and a pad & pier design.
- Provide and install two foundations for a 138KV circuit switcher based on 5cy of concrete each and a pad & pier design.
- Provide and install one foundation for a 138/13.8KV 15MVA transformer based on 15cy of concrete and a slab design.
- Provide and install three single phase 138KV CCVT foundations based on 5cy of concrete each and a pad & pier design.
- Provide and install two foundations for a 15KV structure based on 4cy of concrete each and a pad & pier design.

Grounding:

- Install 4/0 ground grid based on 6000' of 4/0 copper wire, 400 exothermic connections and 12 ground rod locations to a depth of 40' (materials provided by others).
- Install fence ground tails and clamps to ground the fence at all corner posts, gate posts and every 50' between (materials provided by others).
- Install structure ground tails and clamps to each structure column (materials provided by others).
- Install equipment ground tails and clamps to three CCVT's, one circuit switcher and one transformer including arrestors (materials provided by others).
- Install control cabinet grounds tails and clamps to the transformer control cabinet, circuit control cabinet and the CCVT Junction box (materials provided by others).

Structures and Equipment:

- Install one 138KV H-style pull-off structure provided by others.
- Install one 15KV H-style structure provided by others.
- Install three 138KV arresters provided by others.
- Install 138KV GOAB switch w/manual control provided by others.
- Install three single phase 138KV CCVT's on three single phase support stands (other materials provided by others).
- Install one 138KV circuit switcher provide by others.
- Assist in the setting of the 138/13.8KV 15MVA transformer provided by others. [redacted] has not included pricing to provide a crane to off-load and set this transformer. We also make the assumption that the assembly and testing will be performed by others.
- Install 15KV GOAB switch w/manual control provided by others.
- Install three 15KV arresters provided by others.
- Install one 13.8KV to 120/240V station power transformer with a primary fuse (all materials provided by others).
- Provide and install a 120/240V load center for AC power distribution.

Conduit and Control Wiring:

- Install conduit system and 600V wiring to three 138KV CCVT's based on one 2" conduit run of 150' (materials provided by others).
- Install conduit system and 600V wiring to one 138KV circuit switcher based on two 2" conduit runs of 100' (materials provided by others).
- Install conduit system and 600V wiring to one 138/13.8KV 15MVA transformer based on two 2" conduit runs of 100' (materials provided by others).
- Install conduit system and 600V wiring to one station power transformer (materials provide by others).

Bus and Connections:

- Install 138KV Bus and jumpers starting at the 138KV switch thru the 138KV circuit switcher and ending at the 138/13.8KV 15MVA transformer including taps to three 138KV CCVT's and three 138KV arrestors (materials provided by others).
- Install 15KV bus and jumpers starting at the 138/13.8KV 15MVA transformer and ending at the 15KV switch including jumpers to three 15KV arresters and one station power fuse/transformer (materials provided by others).

Oil Containment:

- Provide and install an oil containment system based on a Bentofix geosynthetic clay blanket lined collection area around the transformer and an adjacent holding tank system outfitted with a pump wired to a manual timer switch and a discharge pipe routed to the fence line.

[redacted] pricing is based on several assumptions as listed above. If any are incorrect, we would gladly adjust our pricing per any clarifications offered. We have made our best attempt to list all work included in our proposal. Please don't hesitate to contact us if you have any questions.

Thank you for this opportunity,

[redacted]

Appendix H

EPC Project Management

PRELIMINARY CONSTRUCTION SCHEDULE
TENASKA 138kV TRANSMISSION LINE STUDY

ID	Task Name	Duration	Start	Finish
1	**Engineering**	0 days	Mon 12/7/09	Mon 12/7/09
2	Route Verification	35 days?	Mon 12/7/09	Fri 1/22/10
3	Survey Coordination	10 days?	Mon 1/11/10	Fri 1/22/10
4				
5	Aerial Survey	30 days?	Mon 1/25/10	Fri 3/5/10
6	Site Survey	100 days?	Mon 1/25/10	Thu 5/12/11
7				
8	Substatation 50% Design	45 days?	Mon 12/21/09	Fri 2/19/10
9	Structures 50% Design	45 days?	Mon 1/4/10	Fri 3/5/10
10	Foundation 50% Design	55 days?	Mon 1/18/10	Fri 4/2/10
11	PLS-CADD Model 50% Design	45 days?	Mon 4/5/10	Fri 6/4/10
12	50% Client Review	10 days?	Mon 6/7/10	Fri 6/18/10
13	Substation 100% Design	45 days?	Mon 6/21/10	Fri 8/20/10
14	Structures 100% Design	35 days?	Mon 7/12/10	Fri 8/27/10
15	Foundation 100% Design	40 days?	Mon 8/9/10	Fri 10/1/10
16	PLS-CADD Model 100% Design	40 days?	Mon 10/4/10	Fri 11/26/10
17	Construction Coordination	40 days?	Mon 11/8/10	Fri 12/31/10
18				
19	All Material & Equipment Ordered	200 days?	Mon 6/21/10	Fri 3/25/11
20	Transformer Ordered	216 days?	Fri 5/28/10	Fri 3/25/11
21				
22	**Substation Construction**	0 days	Mon 3/28/11	Mon 3/28/11
23	Below Grade Foundations	10 days?	Mon 3/28/11	Fri 4/8/11
24	Below Grade Ducts & Conduits	10 days?	Mon 4/4/11	Fri 4/15/11
25	Below Grade Grounding	5 days?	Mon 4/11/11	Fri 4/15/11
26	Above Grade Equipment & Buildings	8 days?	Mon 4/18/11	Wed 4/27/11
27	Above Grade Bus Work	5 days?	Mon 4/25/11	Fri 4/29/11
28	Commissioning & Testing	5 days?	Mon 5/2/11	Fri 5/6/11
29				
30	**Owners Acquisition of Right of Way**	0 days	Mon 3/28/11	Mon 3/28/11
31	**Transmission Line Construction**	0 days	Mon 3/28/11	Mon 3/28/11
32	Unloading and storage of materials	5 days?	Mon 3/28/11	Fri 4/1/11
33	Constructing foundations	10 days?	Mon 4/4/11	Fri 4/15/11
34	Framing poles	10 days?	Mon 4/18/11	Fri 4/29/11
35	Setting poles	20 days?	Mon 5/2/11	Fri 5/27/11
36	Pull/string conductor	15 days?	Mon 5/30/11	Fri 6/17/11
37	Restoration of area	3 days?	Mon 6/20/11	Wed 6/22/11

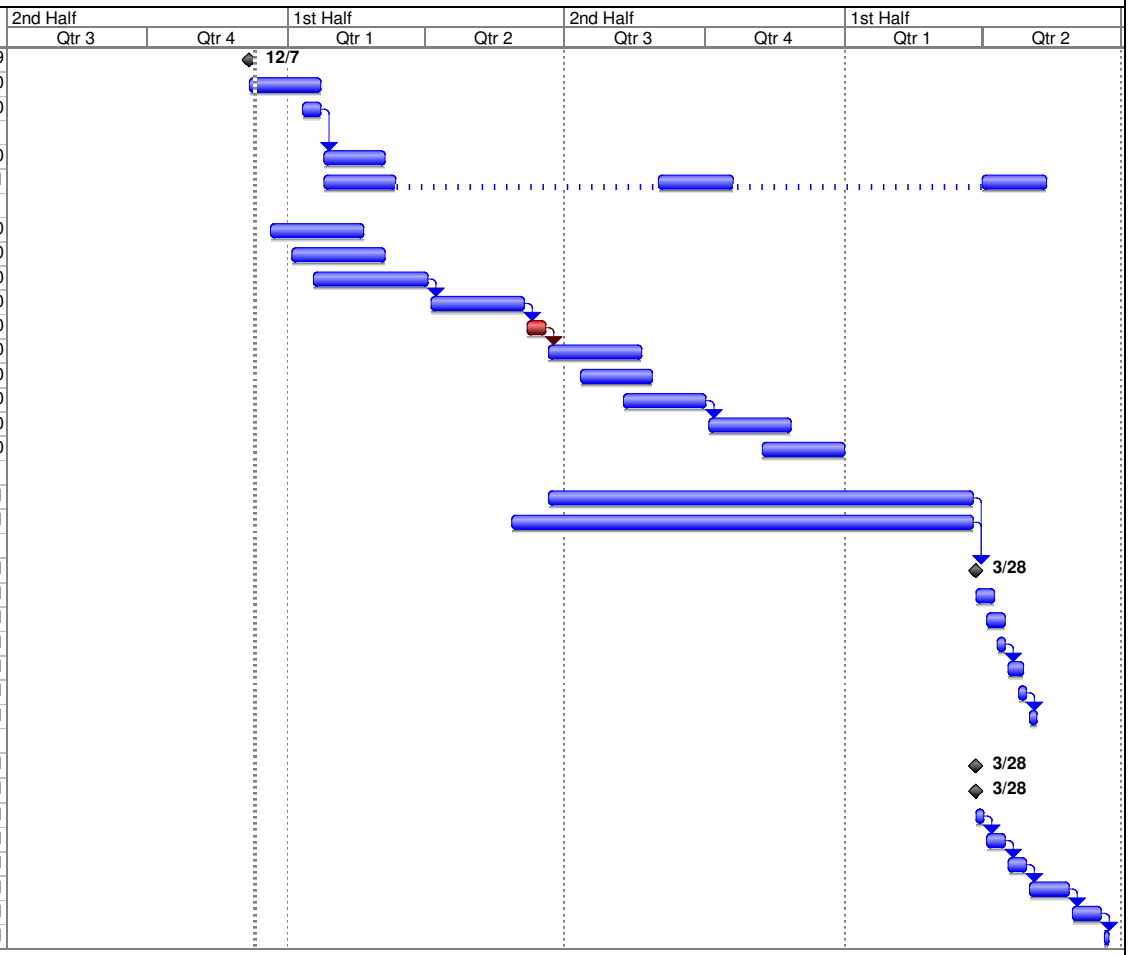

Task		Milestone		External Tasks	
Split		Summary		External Milestone	
Progress		Project Summary		Deadline	