Exhibit 2.1

Taylorville Energy Center Project Description

PROJECT DESCRIPTION

TAYLORVILLE ENERGY CENTER

February 22, 2010

Christian County Generation, L.L.C.

TABLE OF CONTENTS

TEC PROJECT DESCRIPTION **1**

1.0 PROJECT OVERVIEW 1
2.0 FACILITY SITE 3
2.1 SITE DESCRIPTION AND LOCATION 3
2.2 SITE ACCESS 3
3.0 FACILITY OPERATING COMPONENTS 4
3.1 COAL HANDLING AND PREPARATION 4
3.2 SNG ISLAND 5
3.2.1 AIR SEPARATION UNITS 5
3.2.2 GASIFICATION 5
3.2.3 SYNGAS CONDITIONING (SHIFT) 8
3.2.4 ACID GAS REMOVAL (AGR) 9
3.2.5 SULFUR RECOVERY UNIT (SRU) 10
3.2.6 METHANATION 10
3.3 POWER ISLAND 10
3.3.1 COMBUSTION TURBINE-GENERATORS (CTG) 11
3.3.2 HEAT RECOVERY STEAM GENERATORS (HRSG) 11
3.3.3 SELECTIVE CATALYTIC REDUCTION (SCR) 12
3.3.4 STEAM TURBINE-GENERATOR (STG) 12
3.3.5 AIR COOLED CONDENSER 12
3.3.6 CONDENSATE AND FEEDWATER SYSTEM 13
3.3.7 FEEDWATER SUPPLY AND CHEMICAL TREATMENT 13
3.3.8 HIGH VOLTAGE POWER SYSTEMS 14
3.4 UTILITIES AND COMMON FACILITIES 15
3.4.1 COOLING WATER SYSTEM 15
3.4.2 CLOSED COOLING WATER SYSTEM 15
3.4.3 NATURAL GAS/ SNG SYSTEMS 15
3.4.4 FUEL OIL SYSTEMS 16
3.4.5 WATER SUPPLY SYSTEM 16
3.4.6 COOLING TOWER MAKEUP AND CHEMICAL TREATMENT 17
3.4.7 FACILITY AUXILIARY POWER SYSTEMS 18
3.4.8 EMERGENCY GENERATOR AND BACKUP PROVISIONS 18
3.4.9 FIRE PROTECTION SYSTEM 18
3.4.10 TOXIC OR HAZARDOUS MATERIALS SAFETY SYSTEMS 19
3.4.11 CHEMICAL STORAGE 20
3.4.12 WATER COLLECTION AND TREATMENT SYSTEMS 20
3.4.13 STORM WATER DRAINAGE 22
3.4.14 AUXILIARY BOILER 22
3.4.15 NOISE CONTROL TECHNOLOGY 22
3.4.16 LIGHT AND GLARE CONTROL 22
3.4.17 FACILITY SPILL PREVENTION PLAN 22
3.4.18 CONSTRUCTION PRACTICES 23
3.4.19 FACILITY PERMITS AND APPROVALS 23
3.4.20 ENVIRONMENTAL, HEALTH, AND SAFETY POLICY 24
3.5 FACILITY CARBON BALANCE 24
3.5.1 CARBON INPUTS 25
3.5.2 SYNGAS PROCESSES 25
3.5.3 CARBON OUTPUTS 26
3.5.4 EFFECT OF POWER BLOCK DISPATCH 27
4.0 MANAGEMENT OF CAPTURED CO_2 28

4.1 TRANSPORT AND USE OF CO_2 FOR ENHANCED OIL RECOVERY (EOR) 28
4.2 GEOLOGIC STORAGE IN MT. SIMON FORMATION 29

FIGURES

FIGURE 1. INTERNALS OF GASIFIER 7
FIGURE 2. GASIFIER BEING SHIPPED TO CHINESE PROJECT 8

TABLES

TABLE 1. SAMPLE FACILITY CO_2 BALANCE 28

ATTACHMENTS

ATTACHMENT I SITE ARRANGEMENT
ATTACHMENT II FACILITY CHARACTERISTICS
ATTACHMENT III SITE LOCATION
ATTACHMENT IV INTERCONNECTIONS LOCATION MAP
ATTACHMENT VA DESCRIPTIONS OF FACILITY INTERCONNECTIONS
ATTACHMENT VB INTERCONNECTION ROW WIDTHS/CONSTRUCTION
ATTACHMENT VI BLOCK FLOW DIAGRAM
ATTACHMENT VII WATER BALANCE
ATTACHMENT VIIIA TANKS
ATTACHMENT VIIIB CATALYSTS AND SORBENTS
ATTACHMENT IX ENVIRONMENTAL PERMITS AND APPROVALS

ACRONYMS

Acronym	Definition
AGR	acid gas removal
ARES	Alternative Retail Electric Suppliers
ASU	Air Separation Unit
Btu	British thermal unit
CAIR	Clean Air Interstate Rule
CCG	Christian County Generation, L.L.C.
CEMS	Continuous Emissions Monitoring System
cfs	cubic foot per second
CFR	Code of Federal Regulations
CH_4	methane
Cl_2	Chlorine
CO	carbon monoxide
CO_2	carbon dioxide
COS	carbonyl sulfide
CTG	combustion turbine-generator
CWA	Clean Water Act
DOE	U.S. Department of Energy
EIS	Environmental Impact Statement
EOR	Enhanced Oil Recovery
ESA	Endangered Species Act
F	Fahrenheit
FAA	Federal Aviation Administration
ft.	Feet
FRP	fiberglass reinforced polyester
H_2	Hydrogen
H_2S	hydrogen sulfide
HAP	hazardous air pollutant
HCl	hydrogen chloride
HCN	hydrogen cyanide

HERO	High Efficiency Reverse Osmosis
Hg	Mercury
HRSG	Heat Recovery Steam Generator
HVTL	High-Voltage Transmission Line
Hz	Hertz
IDNR	Illinois Department of Natural Resources
IEPA	Illinois Environmental Protection Agency
IGCC	Integrated Gasification Combined Cycle
ILCS	Illinois Compiled Statutes
kV	Kilovolt
MAOP	Maximum Allowable Operating Pressure
mgd	million gallons per day
MMBtu	million British thermal units
MW	Megawatt
NaOCl	sodium hypochlorite
NFPA	National Fire Protection Association
NH_3	Ammonia
NO_2	Nitrogen dioxide
NO_x	Nitrogen oxides
NPDES	National Pollutant Discharge Elimination System
NSRR	Norfolk Southern Railroad
O_2	Oxygen
OES	Obstruction Evaluation Services
OSBL	Outside Battery Limit
OSHA	Occupational Safety and Health Administration
Pb	Lead
PEPL	Panhandle Eastern Pipeline (natural gas pipeline)
PJM	PJM Interconnection, LLC
PM	particulate matter
PPMVD	parts per million, volumetric dry
PSD	Prevention of Significant Deterioration
psig	pounds per square inch gauge
REX	Rockies Express (natural gas pipeline)

R/O	reverse osmosis
ROW	right-of-way
SCR	selective catalytic reduction
SDD	Sanitary District of Decatur, Illinois
SHPO	(Illinois) State Historic Preservation Office
SNG	substitute natural gas
SO_2	sulfur dioxide
SPCC	Spill Prevention, Control and Countermeasure
SR 29	State Route 29
SR 48	State Route 48
SRU	sulfur recovery unit
STG	steam turbine-generator
syngas	synthesis gas
TEC	Taylorville Energy Center
tpy	tons per year
UIC	Underground Injection Control
USACE	United States Army Corps of Engineers
USEPA	United States Environmental Protection Agency
USFWS	United States Fish and Wildlife Service
ZLD	zero liquid discharge

TEC PROJECT DESCRIPTION

1.0 Project Overview

Christian County Generation, L.L.C. (CCG) will construct an Integrated Gasification Combined Cycle (IGCC) power plant (the Facility) in Taylorville, Christian County, Illinois. The Facility, known as the Taylorville Energy Center (TEC), will be a commercial-scale energy production facility based on an IGCC process using state-of-the-art emissions controls and carbon capture and storage technologies. The description of the Facility provided herein is based on preliminary design.

The Facility will include two process islands: (1) the Substitute Natural Gas (SNG) Island comprised of Siemens dry feed quench gasifiers, an air separation unit (ASU), a syngas shift system (shift), an acid gas removal system (AGR), and a methane synthesis unit to produce pipeline quality SNG from the gasifier synthesis gas (syngas); and (2) the Power Island comprised of a combined-cycle power plant, using two "F class" combustion turbine-generators (CTG), two Heat Recovery Steam Generators (HRSG) and one steam turbine-generator (STG). See Attachment I for an illustration of the Facility's Site Arrangement. Commercial operation of the Facility is scheduled for December, 2014.

The Facility will emit significantly less carbon dioxide (CO_2) and regulated pollutants than other electric generating facilities that use coal or coal-derived fuel while using proven technologies for coal gasification, gas processing, and power generation. The Facility will produce SNG from coal to fuel the combined-cycle power plant. In addition, because the amount of SNG produced is projected to exceed the requirements of the Power Island under certain operating conditions, the Facility is designed to allow transport of surplus SNG offsite to an existing interstate pipeline for sale.

CCG will sell power generated by the Facility to Illinois utilities and Alternative Retail Electric Suppliers (ARES) in accordance with the Illinois Clean Coal Portfolio Standards Act, (20 ILCS 3855/1-5 et seq). To qualify under the Illinois legislation, the Facility must be designed to capture at least 50 percent of the CO_2 that would otherwise be emitted from the Facility

(Required Capture Rate) and to meet stringent performance criteria for certain regulated pollutants. Over the range of anticipated operating conditions, the Facility will capture at least 50 percent of the CO_2 that would otherwise be emitted (Projected Capture Rate).

Electrical power will be delivered via an interconnecting 345-kilovolt (kV) transmission line to PJM Interconnection, LLC (PJM).

Natural gas will be used for start-up and as a Power Island back-up fuel. Panhandle Eastern Pipeline (PEPL) and Rockies Express (REX) natural gas pipelines both run east and west, approximately 8.5 miles to the north of the Facility. An interconnecting pipeline between the Facility and PEPL will be constructed to transport natural gas and SNG to and from the Facility. This pipeline could also interconnect with REX in the future.

Excess SNG produced by the Facility will be transported through the bi-directional interconnecting pipe. In addition to the pipeline, SNG compression facilities will be constructed at the Facility to allow transport of SNG to the interstate natural gas pipeline system.

The Facility will process Illinois bituminous coal that will be delivered by truck. Up to a seven-day supply of coal will be stored onsite in a covered active pile. The Facility is being designed to accommodate future rail delivery of coal including the necessary rail loop, rail car unloading, conveyors, coal stacking and reclaiming, and 60-day inactive coal storage infrastructure.

The Facility will control emissions of CO_2, mercury (Hg), sulfur compounds, oxides of nitrogen and particulates. Over 95 percent of CO_2 generated during the SNG production process and at least 50 percent of CO_2 that would otherwise be emitted from the Facility will be captured for Enhanced Oil Recovery (EOR) and ultimate geologic storage. See Attachment II, a table that describes Facility Characteristics, including project components, operating characteristics, and inputs and outputs.

2.0 Facility Site

2.1 Site Description and Location

The Facility will be constructed on 713 contiguous acres in Christian County, Illinois (the Site). The Site is bounded by E1700N Road on the north, State Route 48 (SR 48) and the Norfolk Southern Railroad (NSRR) on the east, farmland on the south, and N1400E Road on the west. See Attachment III, a map of the Site Location.

Approximately 410 acres of the Site were annexed by the City of Taylorville in 2000. Approximately 328 acres of the Site are zoned for industrial use (I-3). The remainder of the Site is currently outside of the city limits. CCG anticipates that the remainder will be rezoned for industrial use. The majority of the Site is located in the Taylorville-Christian County Enterprise Zone. The Enterprise Zone is a partnership between city, county, and state government, businesses, labor, and community groups to encourage economic growth.

The Site is approximately 29 miles southeast of Springfield, Illinois, approximately 81 miles northeast of St. Louis, Missouri, and approximately 180 miles south-southwest of Chicago, Illinois. It is surrounded by agricultural land that is generally used for growing row crops. The topography is slightly rolling with elevation varying across the site from approximately 605 ft. to 615 ft. above mean sea level. Drainage is to an existing drainage ditch running east/west through the Site. The Site is in Section 12 of Township 13 North, Range 2 West. Its latitude is approximately 39.5822 North, and longitude is approximately 89.2598 West.

2.2 Site Access

Access to the Site will be from E1700N Road on the north side of the Site, and from N1400E Road on the west side of the Site. CCG will upgrade (to handle 80,000 pounds gross vehicle weight) approximately 6 miles of E1700N Road between SR 48 and State Route 29 (SR 29). This upgrade work will provide for the increased use of the road during Facility construction and operations.

CCG plans to build and own a connection to the NSRR mainline located along the east boundary of the Site. See Attachment IV, a map of the Facility Interconnections, including the NSRR connection. For brief descriptions of the Facility Interconnections, see Attachment VA, and Attachment VB, information concerning interconnection ROW widths and construction techniques.

3.0 Facility Operating Components

The Facility will convert the coal feedstock, through gasification and other chemical processes, into SNG using Siemens dry feed quench gasifiers. The SNG and steam from the SNG Island will be used to power two CTGs and one STG to generate electricity. As noted above, excess SNG will be transported offsite for sale. The coal handling and preparation facilities, SNG Island, Power Island, and other common and pollution-prevention components of the Facility are described below. See Attachment VI, a Block Flow Diagram of the Facility processes.

3.1 Coal Handling and Preparation

The Facility will handle and process Illinois bituminous coal. Truck unloading, weighing and sampling facilities, as well as an inbound truck staging roadway, will be installed to receive coal by truck. A rail interconnection with NSRR will be constructed to accommodate a future rail loop for the unloading of unit trains of coal. Facility roadways will be paved to minimize dust associated with truck traffic. The active storage pile will be enclosed to improve control of coal dust, with access for mobile equipment around the coal pile. If and when constructed, the outdoor, inactive storage pile will use polymer sealants or comparable materials to control dust. Mobile equipment will keep the storage piles compacted and move coal as required to coal conveying systems.

Coal will be crushed in ring granulators prior to subsequent milling and drying to specifications required in the gasification system. A conveyance system will then transfer the coal to storage silos supplying coal to the gasification system. A pneumatic conveying system using CO_2 for the carrier gas will transfer the coal to the gasifiers. A combination of passive dust control and

baghouse collectors will be incorporated to control coal dust and achieve particulate matter (PM) emission limits.

3.2 SNG Island

In the gasification process, heat, pressure, oxygen and water will be used to convert coal into synthesis gas (syngas) consisting primarily of hydrogen (H_2) and carbon monoxide (CO). Particulates will be removed from the syngas in the particulate scrubber. CO will react with steam in a "shift" reactor to produce H_2 and CO_2. Hg will be absorbed in an activated carbon guard bed, and acid gases (CO_2 and H_2S) will be separated in a Rectisol unit, which is an AGR system, for further processing and disposal.

The cleaned syngas will be converted into SNG through a catalytic methanation process. The SNG, comparable to natural gas in quality, characteristics and energy content, will be burned in two CTGs that will operate in combined-cycle to produce electricity. Excess SNG will be exported to the natural gas pipeline system through a bi-directional pipeline from the Facility to an existing interstate natural gas pipeline. Excess process gas during startups and upsets will be disposed of by combustion in a flare.

3.2.1 Air Separation Unit

One ASU owned and operated by a third party will provide high purity oxygen and nitrogen for use by various processes onsite. The ASU will separate atmospheric air into its primary constituents. Nitrogen will be used during start-up and for coal conveying during normal operations. The oxygen will be compressed and utilized in the gasification process. Liquid argon, oxygen and nitrogen will be sold by the ASU owner and transported off-Site via trucks.

3.2.2 Gasification

The Siemens gasifiers that will be installed at the Facility are single stage, oxygen-blown downward entrained flow, slagging gasifiers. Pulverized coal, oxygen and steam will be fed into the top of the gasifier in parallel flow. The fuel will be converted to a syngas consisting of hydrogen, CO, CO_2, and small amounts of nitrogen, argon, ammonia (NH_3) and water. During

gasification, the sulfur compounds in the fuel will be converted to hydrogen sulfide (H_2S) and carbonyl sulfide (COS). The mineral matter will form a molten slag.

The syngas and the slag will be cooled and saturated with water in a quench chamber section of the gasifier. The slag will solidify and fall to the bottom while the syngas will exit the side of the gasifier. The coarse slag will exit the bottom of the quench chamber via a hopper system for transfer to either trucks or rail cars for sale, or disposal at either an on-site or off-site landfill. A blowdown stream, called "black water", containing fine slag, salts, dissolved gases and unreacted coal particles, will be removed continuously from the quench chamber to limit solids accumulation. The solid material will be recovered in a filtration process and either sold or disposed of in a landfill. The mostly solids-free water from the black water and particulate scrubber water filtering system will primarily be recycled to the quench chamber, while a small portion will be discharged to a zero liquid discharge (ZLD) water treatment system.

The raw syngas exiting the gasifier will flow to a wet scrubber for removal of entrained solid particles and chlorides. The scrubbed syngas from each gasification train will combine into a single header to feed the shift reaction and downstream cooling sections. The scrubber water purge will be directed to the black water system. The two Figures below illustrate the gasification process and the Siemens gasifier.

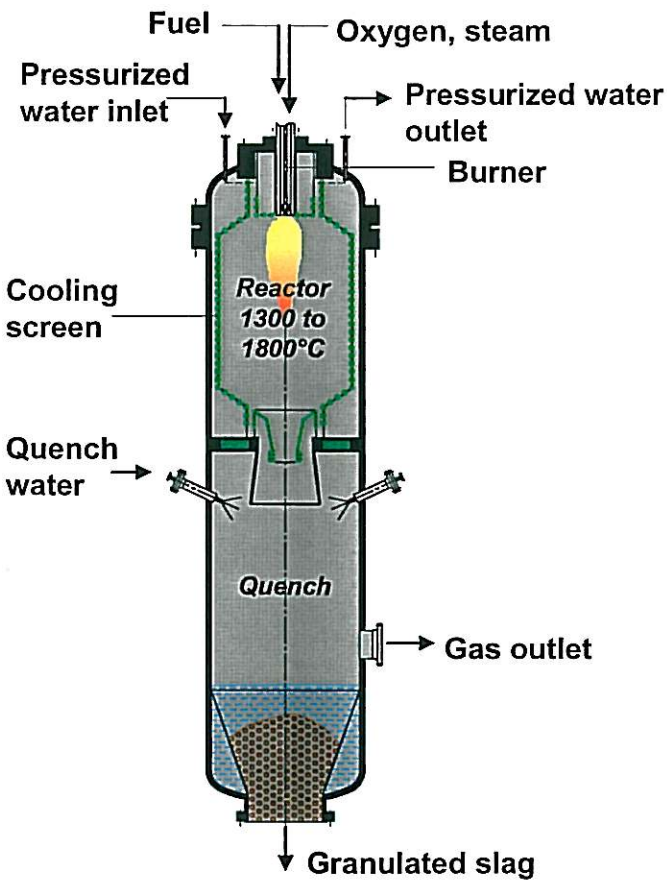

Figure 1: Internals of a gasifier

Figure 2. Gasifier being shipped to Chinese project

3.2.3 Syngas Conditioning (Shift)

The production of SNG from syngas requires a molar ratio of three H_2 to one CO, requiring conversion of some of the CO to H_2. To accomplish this, a portion of the syngas from the wet scrubbers will be heated and fed to two parallel reactors containing a catalyst to promote the water gas shift reaction, in which CO and water will be converted to CO_2 and H_2. This requirement will also result in substantial fraction of the carbon input being available for capture and storage as CO_2 during normal operations. See Section 3.5 for a detailed discussion of the Facility's "carbon, or CO_2, balance",

The shift reaction will produce heat. The syngas leaving the shift reactors will be used to preheat the reactor feed, then cooled in a series of shell and tube heat exchangers to generate steam and heat boiler feedwater. Final cooling will remove most of the water in the syngas. In addition, most of the NH_3 and a small portion of CO_2 and H_2S will be absorbed in the water. Some of the condensed water will be sent to a sour water stripping unit, with the remainder recycled to the gasifiers.

Following the shift, cooled syngas will pass through a Hg removal system consisting of an activated carbon bed for greater than 90 percent removal of Hg from the syngas. The cooled, shifted syngas will then flow to the AGR unit.

The sour water stripping unit will receive process condensate from the gas cooling system. The sour water stripper will remove H_2S, COS, CO_2 and NH_3 from the water to a level suitable for discharge to a wastewater treatment system. The sour water stripper will also receive blowdown from gasification. The gas from the sour water stripper will be sent to the sulfur recovery units (SRU) for further processing.

3.2.4 Acid Gas Removal (AGR)

The Facility will utilize Rectisol AGR technology, licensed from Air Liquide/Lurgi, for acid gas removal and CO_2 recovery. One Rectisol process train will be included in the SNG Island. The Rectisol system utilizes chilled methanol as a physical solvent to remove acid gas compounds (H_2S, COS and CO_2) from the syngas. The "sweet" syngas from the AGR will feed the methanation units.

The CO_2 product separated by the Rectisol system will be of high purity. A small part of the CO_2 will be used as the carrier gas for coal transport to the gasifiers. The remaining CO_2, along with recovered CO_2 from the coal feed system vents, will be compressed for transport and for use in EOR or for geologic storage. Over 95% of the CO_2 available to the AGR in the synthesis gas will be captured. The separated H_2S and COS acid gases will be sent to the sulfur recovery unit for further processing.

3.2.5 Sulfur Recovery Unit (SRU)

Two oxygen-blown Claus-type SRUs will be included in the SNG Island to remove sulfur from the acid gas stream coming from the AGR. The combustion products will pass over beds of activated alumina catalyst to convert the H_2S and sulfur dioxide (SO_2) to gaseous, elemental sulfur. The sulfur will be condensed in heat exchangers, with the molten sulfur stored in a 2-3 day capacity reservoir for transfer to either trucks or rail cars for sale, or for disposal at an offsite landfill. Gas leaving the SRUs will be sent to one of the two tail gas treatment units.

In the tail gas treatment units, the tail gas sulfur compounds, including SO_2, COS and elemental sulfur, will be converted to H_2S in a hydrogenation reactor. The H_2S stream will then be compressed and recycled to the Rectisol process. A standby thermal oxidizer, which will be utilized during start-ups and plant upsets, will convert residual H_2S in the gas steam from the tail gas treatment unit to SO_2 prior to emitting it to the atmosphere. The overall sulfur recovery efficiency of the SRUs will approach 100 percent during normal operation.

3.2.6 Methanation

SNG will be produced from the sweet syngas by converting CO and H_2 in the syngas to methane (CH_4). A methanation catalyst's life is reduced by sulfur compounds, so a guard bed will be provided to remove traces of sulfur from the syngas before it is fed to a series of fixed bed methanation reactors containing catalyst.

The methanation reactions produce heat, so the gas coming from each reactor will be cooled by generating steam. The SNG will be further cooled and dried for use in the CTGs and/or exported to the pipeline system.

3.3 Power Island

The Power Island will be comprised of two CTGs, two HRSGs, one STG and associated emission control, steam cycle, cooling and electrical facilities. Emissions of SO_2, Hg, CO_2, and PM will be controlled through fuel processing upstream of the Power Island. The gas turbines will use low nitrogen oxide (NO_x) combustors and Selective Catalytic Reduction (SCR) to control NO_x emissions.

3.3.1 Combustion Turbine-Generators (CTG)

The Facility's Power Island will include two "F class", heavy-duty, single-shaft gas CTG units, each comprised of an air compressor, SNG/natural gas combustion system, power turbine, and 60 Hertz (Hz) generator.

The CTG packages will contain equipment necessary for sequencing, controlling and monitoring the turbines. The control packages will provide dispatching capability. The CTGs will be equipped with inlet air evaporative cooling systems.

3.3.2 Heat Recovery Steam Generators (HRSG)

The hot exhaust gases from the CTG units will flow to HRSG units, with one HRSG provided for each of the two CTGs. Exhaust gas entering the HRSG units at approximately 1,100°F will be cooled to approximately 200°F when it leaves the HRSGs, with the heat recovered to heat feedwater and generate steam.

High-pressure steam will be expanded in the STG. Intermediate-pressure steam will be superheated, combined with cold reheat steam, reheated in the HRSGs, and admitted to the STG. Low-pressure steam will be admitted into the STG. Steam produced by the CO shift and methanation sections of the SNG Island will be combined with steam produced in the HRSGs and admitted to the STG. Steam will also be sent from the Power Island to the SNG Island to meet process requirements.

One exhaust stack will be provided for each of the two HRSGs. The stacks will have monitoring ports and access platforms for the Continuous Emissions Monitoring Systems (CEMS) that will measure concentrations of NO_x, CO and O_2 in accordance with federal and Illinois Environmental Protection Agency (IEPA) air quality regulations and the Facility's air permit. SO_2 and CO_2 emissions will be calculated using fuel flow rate and fuel composition data. The CEMS will also measure NO_x and O_2 concentrations upstream of the SCR systems. A CEMS quality control monitoring plan and reporting system will be developed and implemented in accordance with federal and state regulations.

3.3.3 Selective Catalytic Reduction (SCR)

SCR systems will be installed within the HRSGs to reduce NO_x emissions. In the SCR process, ammonia injected into the gas turbine exhaust gas will react with nitrogen oxides in the exhaust gas to form nitrogen and water. The catalyst unit location within each HRSG will be selected so that exhaust gas passing through the catalyst is in the catalyst's most active temperature range.

3.3.4 Steam Turbine-Generator (STG)

Steam produced in the HRSGs and recovered in the process units will be expanded through a steam turbine, driving a generator to produce electric power. Steam leaving the STG will be directed to an air-cooled condenser where it will form condensate that will be recycled to the HRSGs.

The steam turbine will be a tandem compound, single reheat steam turbine designed for nominal inlet steam conditions of 1,900 psig, 1,050°F and exhausting to a nominal 2 inches mercury absolute pressure. The STG will include a 60 Hz, 3,600 rpm, hydrogen cooled generator.

3.3.5 Air Cooled Condenser

The STG will exhaust into an air cooled surface condenser. The steam will be cooled and condensed inside tubes, and the heat will be transferred to air forced over the tubes by fans. The condenser system will include steam ducts and expansion joints to take the steam from the STG to the condenser modules, piping to collect condensate and take it to a condensate storage tank, a vacuum system to remove noncondensible gases, electric drive fans, and instrumentation and controls. Steam and air flow to the modules will be adjustable for startup and shutdown conditions, for freeze control, and to reduce power requirements. A full steam bypass system may be provided to control condenser temperature levels during startup as well as for temporary STG trips.

A vacuum deaerator, using STG exhaust steam piped from the condenser to heat and remove oxygen and other gases from the cycle makeup, will be provided with the air cooled condenser. The deaerated makeup will be collected in the condensate storage tank.

Recoverable steam and condensate from cycle drains, the gland steam condenser, and turbine sealing steam will also be routed to the air cooled condenser.

STG bypass systems to the condenser will permit matching of HRSG load and temperature with STG load and temperature during startup and will accommodate HRSG steam production, as well as process steam from the SNG Island, in case of a STG outage.

3.3.6 Condensate and Feedwater System

Process condensate returns from the SNG Island will be fed into a conventional deaerator. Steam required for deaeration will be taken from the low pressure process steam header. An auxiliary vacuum system will remove noncondensible gases from the deaerator. Mixed bed ion exchanger condensate polishers will be provided to insure process condensate return quality.

The condensate system will deliver condensate from the condensate storage tank through the STG gland steam condenser and HRSG feedwater preheaters to the HRSG low pressure steam drums. Multistage, vertical turbine, can-type condensate pumps will be provided.

The boiler feedwater system will include the feedwater pumps, piping, feedwater regulators, valves and controls. Boiler feed pumps will be provided for each HRSG. Intermediate-pressure feedwater will be provided from bleed ports on the high-pressure boiler feed pumps, or provided by separate pumps. The boiler feed pumps will take suction from the low pressure steam drum. The feedwater pumps will be electric motor driven, barrel, horizontal split case, or multistage, segmental ring, centrifugal pumps. Process boiler feedwater pumps will pump deaerated process condensate to the SNG Island.

Each HRSG will be equipped with one blowdown tank with silencers to control noise level.

3.3.7 Feedwater Supply and Chemical Treatment

Steam cycle makeup water will be treated to minimize scaling and corrosion within the Power Island and SNG Island steam system. Water treatment system design will include two-stage reverse osmosis (R/O) membrane units with pre-treatment and pre-filtration, followed by a degasifier. Reject water from the R/O units and backwash from the filter system will be recycled

to the process and gasification sump collection. Treated water from the R/O units will flow to mixed bed ion exchange units. The ion exchange units will be regenerated off site. A sodium bisulfate feed skid will remove chlorine (Cl_2) from the feedwater to the ion exchange units.

Boiler water in the Power Island and SNG Island will be chemically treated as needed to minimize corrosion, scaling and oxygen content, with phosphate, oxygen scavenger and neutralizing amines. A tank will be provided to store demineralized water. Pumps will be installed to provide demineralized water for makeup to the Power Island and SNG Island.

3.3.8 High Voltage Power Systems

3.3.8.1 Electrical Power Interconnections

The Facility will interconnect with the grid through a new 345-kV transmission line that will be constructed from the Facility to Commonwealth Edison's Kincaid substation located west of the Facility. The new transmission line's preliminary route was selected because it will avoid densely populated areas and will parallel apparent parcel boundaries and township borders to prevent bifurcation of private properties. The route will follow an existing transmission line route for a quarter of its distance, and will cross two water bodies at locations already used by other lines, thus minimizing the need for additional right-of-way and environmental disturbance.

The Facility and its interconnection transmission line will comply with interconnecting utilities specifications and requirements. See Attachment IV, a map of the Facility Interconnections, including the transmission line from the Facility to the grid system, and Attachment VB, information concerning interconnection ROW widths and construction techniques. Any auxiliary and backup power needed by the Facility when it is not generating its own power will come from the grid.

The Facility will obtain construction power from Shelby Electric Cooperative. Construction of a distribution line from the existing NE Taylorville Substation to the Facility will be required as shown on Attachment IV. The line will remain in place during commercial operation to provide emergency backup power to the Facility.

3.3.8.2 Facility Switchyard

The Facility switchyard will contain all necessary buses, breakers, disconnects and related equipment and high voltage metering for tie-in to the transmission system. All relaying and control of the switchyard breakers as required for generator and transformer protection will be included. The Facility will provide the high voltage system facilities through the dead end structures at the Facility switchyard.

3.4 Utilities and Common Facilities

3.4.1 Cooling Water System

Air cooled heat exchangers will be used for process cooling requirements whenever feasible. Critical cooling loads and cooling loads that cannot be adequately satisfied with air cooling will be cooled with water recycled through a cooling tower where heat is released to the atmosphere. One mechanical induced draft, multi-cell counter-flow cooling tower will service the Facility.

The cooling water system will deliver water from the cooling tower to the cooling loads and return the water back to the cooling tower. The system will include vertical, wet-pit circulating water pumps.

3.4.2 Closed Cooling Water System

The Facility will also be equipped with a closed cooling water system with heat exchangers to remove heat to the cooling water system. The closed cooling water system will be used to provide cooling water to generator coolers, lube oil coolers, sample coolers, boiler feedwater pump coolers, and other sensitive loads. Demineralized water and propylene glycol will be used to protect against freezing for makeup to the closed cooling water system.

3.4.3 Natural Gas/ SNG Systems

SNG will be the primary fuel used to power the CTGs. Natural gas will be available for start-up and as backup fuel for the Power Island. The existing PEPL interstate natural gas pipeline will serve the Facility. Natural gas will be delivered to the Facility through a bi-directional interconnecting pipeline with PEPL.

PEPL will provide the necessary equipment to measure gas quality and volume, including a gas chromatograph and a gas flow meter for billing. A local gas chromatograph, check flow meter, and gas startup heaters will be installed at the Facility in conjunction with natural gas usage.

SNG compression equipment will be capable of compressing SNG for export to PEPL. See Attachment IV, a map of the Facility Interconnections, including the natural gas pipeline, and Attachment VB, information concerning interconnection ROW widths and construction techniques.

3.4.4 Fuel Oil Systems

The Facility will have fuel oil storage tanks to fuel diesel engine driven fire pumps, backup generators, and mobile equipment. The above ground fuel oil storage tanks will be placed within secondary containment that will be sized to contain the full capacity of the tanks.

3.4.5 Water Supply System

Treated municipal effluent from the Sanitary District of Decatur (SDD), the regional wastewater treatment authority serving Decatur, Illinois and the surrounding area, will satisfy the Facility's process water requirements. A water pipeline owned by the SDD will generally follow SR 48, routed around populated areas. See Attachment IV, a map of the Facility Interconnections, including the process water pipeline route, and Attachment VB, information concerning interconnection ROW widths and construction techniques.

The treated municipal effluent will be aerated and suspended solids removed in a clarifier. The water will be chlorinated with sodium hypochlorite (NaOCl) to destroy biological organisms and to oxidize organic matter and iron. A flocculent polymer and a coagulant will be added to improve liquids/solids separation. Clarified water will be collected in a clearwell and pumped to the service water treatment process or to the cooling tower. A portion of the clarified water will also be sent to clarified water storage tanks.

Sludge blowdown from the clarifier will be piped to a sludge sump and pumped to a cooling tower sidestream softener thickener. Clear water from the thickener will be recycled to the

cooling tower sidestream softener inlet. Pumps will transfer the thickened sludge to a filter press. Sludge dewatering polymer will be fed at the thickener sludge pump discharge to aid the sludge dewatering process. Water from the filter press will be recycled, and solids will be collected and trucked to either an onsite or off-site landfill for disposal.

A water treatment building will contain the filter press, tanks for sodium hypochlorite and caustic, and two 100 percent capacity chemical feed systems each for sodium hypochlorite, coagulant, and flocculent polymer.

Water from the clarified water tank will be used for cooling tower and service water system makeup. Service water is used as the make-up to cycle RO system, CTG evaporative cooling and for plant service needs.

Water for plant service water and demineralized water makeup will be produced by pumping clarified water through filters to capture any solids carry-over from the clarifier. Backwash water from the filters will be returned to the clarifier by filter backwash pumps.

A service/firewater water storage tank will be used for storage of filtered water. The bottom portion of the service/firewater water storage tank volume will be dedicated to firewater supply. Pumps will supply filtered water to the demineralized water makeup system and for the Facility service water system. See Attachment VII, a diagram of the Facility Water Balance.

Potable water will be obtained from the Taylorville municipal water system through an approximately 3-mile long pipeline owned by the City of Taylorville. See Attachment IV, a map of the Facility Interconnections, including the route of the potable water pipeline, and Attachment VB, information concerning interconnection ROW widths and construction techniques.

3.4.6 Cooling Tower Makeup and Chemical Treatment

Dissolved solids concentration in the cooling water will be controlled by blowdown. Sulfuric acid will be added as required for alkalinity control, a polymer blend treatment will be employed as a dispersant, a blend of organic phosphonates will be used for corrosion control, and sodium

hypochlorite will be added in conjunction with periodic use of a non-oxidizing biocide for the control of algae and other microbiological growth.

3.4.7 Facility Auxiliary Power Systems

Auxiliary power for startup, shutdown and during plant outages will be supplied from the 345 kV interconnection. The Facility's distributed control system will provide remote control and monitoring of the plant switchyard circuit breakers, and monitoring of the circuit breakers.

3.4.8 Emergency Generator and Backup Provisions

Permanent, three-phase emergency diesel fired generators will be connected to the Facility's emergency bus system.

3.4.9 Fire Protection System

The fire protection system for the Facility will conform to the National Fire Protection Association (NFPA) standards. The fire protection system will include a firewater loop and monitors, CO_2, FM200 waterless systems, and dry chemical fire extinguishing systems, water sprinkler systems for selected areas, and portable fire extinguishers.

The facility-wide audio and visual fire alarm system will be designed to notify all personnel within the Facility to respond in case of an event. A master fire alarm panel will be located in the control room, which will be manned at all times. The Facility alarm and notification system will utilize addressable detection devices, and hand-pull systems to alarm the master panel and provide for the exact location of the remote device in alarm status.

The master fire alarm panel will also monitor the status and operation of the fire pumps to verify startup and proper operation. Critical area alarms will automatically actuate the facility-wide alarm system. Manual pull stations will be located strategically throughout the Facility and at building exits and will include local supervisory panels at the local valve stations. The fire-signaling system will also allow for two-way communication.

The firewater system will be supplied by water from the service water storage tank. Process water from the SDD, after onsite clarification and treatment, will supply the tank. Electric motor

driven and diesel engine driven fire pumps will provide 125 psig pressure at their discharge. An electric motor driven jockey pump will operate on continuous standby and will start or stop when required to maintain firewater pressure between low-pressure and high-pressure points.

The CTG mechanical packages, turbine enclosures, and electrical control packages will be protected by automatically actuated CO_2 and FM200 systems supplied by the CTG manufacturer.

Wet pipe sprinkler systems will protect the administration and office areas and firewater pump rooms. Dry pipe sprinkler systems will be installed on the cooling tower, at lube oil storage tanks and the hydraulic oil systems, and in the maintenance and warehouse areas. A dry pipe, pre-action sprinkler system will be provided at the STG bearings and in the battery room. Deluge sprinkler systems will protect the main transformers and the auxiliary transformers. Fire walls will separate the main transformers and auxiliary transformers from each other and from the rest of the Facility.

The control room and electrical equipment rooms will be furnished with fire detection and fire extinguishers. Portable fire extinguishers will be provided throughout the Facility and within buildings or structures.

3.4.10 Toxic or Hazardous Materials Safety Systems

The storage and handling of toxic or flammable materials will be in compliance with USEPA and Occupational Safety and Health Administration (OSHA) regulations and the NFPA "Guide on Hazardous Materials." Liquid storage areas will be properly sited and will be constructed to be impermeable with sufficient curbs around the storage vessel to confine any spillage. Chemicals will be isolated to minimize any chance of hazardous chemical reactions.

The Facility flare will be utilized to control start-up, shut-down, and upset emissions.

Facility personnel will be trained and equipped to handle all chemicals (gaseous, liquid or solid) in both normal and emergency situations. Contents and hazardous identification system stickers will be placed on storage tanks to aid in safe procedures in emergencies. Combination safety

shower and eye wash stations will be installed in areas where toxic chemicals are being stored or handled.

3.4.11 Chemical Storage

Chemicals will be transported to the site by either truck or rail. The appropriate amount of chemicals to be stored onsite will be determined by the rates of consumption, customary delivery volumes available from suppliers, and the reliability of supply. See Attachment VIIIA, a list of tanks with their contents and capacities, and Attachment VIIIB, a list of catalysts and sorbents that will be used.

Sulfuric acid, caustic soda (sodium hydroxide or NaOH), and sodium hypochlorite tanks will be located within separate concrete containment areas sized to contain the full capacity of each tank. Caustic soda will be stored indoors, as will water treatment chemicals requiring protection from freezing. Storage areas will be curbed to contain potential leaks or spills.

Anhydrous ammonia for use with the SCR systems to control NO_x emissions will be stored in a tank. The ammonia storage tank will be located within a concrete containment area sized to contain its full capacity. An ammonia leak detector will be installed in the area of the tank to alert the operators of any leak. A manually initiated deluge system will be provided around the tank. Safety showers will be readily available to personnel in accordance with OSHA regulations.

The chemical suppliers' recommendations and procedures will be followed in storing and handling all chemicals.

3.4.12 Water Collection and Treatment Systems

Process equipment areas will be surfaced and curbed, with drains directed to an underground oil/water separator. Areas with potential for oil spills will be curbed and surfaced to contain oil spills, with drains from the area directed to the oil/water separator. Sumps and sump pumps will be provided where required to deliver water to the oil/water separator. Oil removed from the

water will be collected, managed and disposed of by a qualified contractor. Water from the oil/water separator will be directed to a plant sump.

Chemical handling areas will be surfaced and curbed, with drains directed to a chemical waste sump. Water from the chemical waste sump will be neutralized as required and discharged to a plant sump.

The Facility will eliminate process wastewater through use of water treatment, recycling, and a ZLD system. The wastewater from low volume sources (equipment wash water, neutralized chemical waste sump water, water from the oil/water separator) will be collected in the plant sump and recycled to the inlet of the clarifier. CTG evaporative cooler blowdown and backwash from the filter systems will be recycled to the inlet of the clarifier.

Cooling tower blowdown will be softened using lime and soda ash before being treated in a high efficiency RO (HERO) unit. High quality water from the HERO unit will be combined with reject from the makeup RO system, boiler blowdown, process steam system blowdown, ASU blowdown and high quality water recovered in the SNG Island's ZLD system in a process sump, and will be used for cooling tower makeup. Reject water from the HERO unit will be sent for treatment in the ZLD unit.

Blowdown from the gasifier black water and particulate scrubber water filtering systems will also be treated in the ZLD system.

The ZLD unit will remove both dissolved and suspended solids from the water. The solids will be trucked to either an onsite or off-site landfill for disposal. High quality water recovered in the ZLD unit will be sent to a process sump and used for cooling tower makeup.

Sanitary wastewater from the Facility will be treated in an on-site packaged extended aeration sewage treatment system with the treated effluent being returned to the inlet of the clarifier. Sludge from the sewage treatment process will be trucked to either an onsite or off-site landfill for disposal.

3.4.13 Storm Water Drainage

A storm water drainage system will ensure a stable and well-drained Site for the Facility. A system of ditches and culverts, or catch basins and storm sewers, or a combination, will be installed to convey storm water runoff around and away from the plant facilities to permitted discharge points. The storm water drainage system will continue to direct storm water runoff along preconstruction drainage patterns as much as practical.

3.4.14 Auxiliary Boiler

A natural gas-fired auxiliary boiler will supply steam for startup. The auxiliary boiler will only be operated on an intermittent basis. Emissions from the boiler will be controlled by good combustion practices and low-NO_x burners.

3.4.15 Noise Control Technology

The Facility will be designed and constructed to comply with State of Illinois noise control regulations. Potential noise control measures that may be incorporated into the design include locating and orienting plant equipment to minimize sound emissions, providing buffer zones, enclosing noise sources within buildings, installing inlet air silencers for the CTGs, and including silencers on plant vents and relief valves.

3.4.16 Light and Glare Control

Lighting installed at the Facility will be designed to reduce potential light and glare beyond the Site boundary. All high intensity lighting will be shielded and cooling tower, stack, and pipe rack lighting will be aimed downward and inward, rather than outward toward off-site locations. The Facility will be designed to enable exterior lighting for distinct areas to be switched off when not in use.

3.4.17 Facility Spill Prevention Plan

A Facility spill prevention plan will be developed to establish compliance with federal and state regulations. The plan will include the following points:

- Confirmation that the Facility's operations manual meets applicable regulations

- Description of the Facility's maintenance and inspection program relative to spill prevention and control
- Provisions to keep maintenance and inspection records current
- Descriptions of spill prevention technology used at the Facility
- Facility procedures to contain and recover oil or hazardous substances spilled during onsite transfers
- Training procedures for personnel regarding spill prevention and control
- Inspection and preventive maintenance procedures regarding spill prevention and control
- Facility security procedures regarding spill prevention and control

3.4.18 Construction Practices

Conventional construction methods will be used to build the Facility. Work practices designed to minimize air pollutant and fugitive dust emissions, noise, and storm water runoff impacts will be used during construction. Construction-related emissions will be typical of those associated with a large industrial construction project and will primarily be related to air emissions from construction traffic and fugitive dust emissions from site disturbance, and storm water runoff from construction areas. Contractors will implement "best management practices" to limit such releases and will comply with associated regulatory requirements.

Construction of the Facility is expected to take approximately 48 months, including 4 to 5 months of testing and commissioning prior to commencing commercial operations. An average of approximately 1,300 construction workers and a peak of up to 2,470 construction workers is anticipated during the construction phase.

3.4.19 Facility Permits and Approvals

The Facility and Site are subject to various federal, state, and local permits and approvals that will be obtained over the course of its development and operation. See Attachment IX, a table of Facility environmental permits and approvals.

3.4.20 Environmental, Health, and Safety Policy

Like all Tenaska affiliates, CCG recognizes the importance of the environment and the protection of human health and safety and intends to establish an Environmental, Health, and Safety Policy (EHS Policy) for the Facility. CCG's EHS Policy will direct all persons and entities operating and maintaining TEC on its behalf to act in a manner protective of human health, the environment, and property while complying with all applicable environmental laws and regulations.

CCG will also establish an Environmental Management System (EMS) at the Facility. The EMS will be designed to implement the EHS Policy within the context of federal, state, and local law and regulations, along with specific permits and agreements that define TEC's environmental requirements. The goal of the EMS will be to efficiently execute all Facility activities with zero defects in environmental compliance.

The EMS will include:

- Written procedures provided in various documents (including an Environmental Manual)
- Periodic and routine inspections
- Recordkeeping
- Employee training
- Compliance review and corrective action
- Internal report review and notification processes

3.5 Facility Carbon Balance

To qualify under the Illinois Clean Coal Portfolio Act, the Facility must achieve the Required Capture Rate of at least 50 percent of the CO_2 that would otherwise be emitted. The Projected Capture Rate for the Facility is at least 50 percent of the CO_2 that would otherwise be emitted annually during normal operating conditions. The Facility's CO_2 (carbon) balance, which compares its carbon inputs and outputs, is described and calculated below and is the basis for this estimate of the Projected Capture Rate. The terms "carbon" and "CO_2" are used interchangeably

because carbon must be converted to CO_2 in order to derive its maximum amount of energy. Annual emissions, and the related capture rate, will vary from year to year depending upon the amount the Facility actually operates.

3.5.1 Carbon Inputs

There will be two sources of carbon used at the Facility:

Coal (which is primarily carbon) will be crushed, dried, and fed into the TEC gasifiers. Unlike in a conventional pulverized coal or circulating fluidized bed boiler, the carbon is not completely combusted to form CO_2. Instead, it is converted to CO, small amounts of CO_2, COS, and hydrogen cyanide (HCN). Along with H_2 and H_2O, CO makes up the majority of the raw syngas stream. A small portion of the carbon is not converted in the gasifiers. Instead, it will exit in the slag and the filter cake produced in the black water treatment system. SNG will be produced to fuel the CTGs in the Power Block. See Section 3.2 for a step-by-step description of how SNG will be produced at the Facility.

Pipeline natural gas (which is primarily CH_4) will be imported and fed to the Power Block to make up the other "carbon input". The Facility will import any natural gas it may need to fully fuel both CTGs under certain ambient conditions. However, this fuel will not be continually required. Although CCG expects to operate one CTG at the Facility at full load whenever the Power Block is available, the second CTG will be dispatched on and offline according to market conditions. According to the projected dispatch schedule, SNG for export will significantly exceed imported natural gas.

3.5.2 Syngas Processes

The Facility's carbon balance, in part, will be defined by the syngas treatment and conversion processes which are briefly described below. See Subsections 3.2.3 - 3.2.6 for more detailed discussions of these processes.

Shift: A portion of the CO in the syngas (approximately 65%) and some H_2O will be converted to CO_2 and H_2 in the shift reactor trains. The amount of CO converted will be carefully controlled using a bypass line to achieve a ratio of three H_2 molecules to one molecule of CO.

The 3:1 ratio is required in order for the methanation reactor to produce an SNG product that meets pipeline specifications for natural gas.

AGR/SRU: H_2S and CO_2 present in the shifted syngas will be separated in the AGR (Rectisol) unit. Sulfur will be recovered from the H_2S-laden acid gas stream in the SRUs. "Tail gas" from the SRUs will be recycled back to the AGR so that residual sulfur and CO_2 can be captured.

Portions of the CO_2 product will be recycled back to the gasifiers and the SRUs. The remainder will be compressed for export via pipeline to EOR and storage.

Methanation: The methanation reactors will convert the sweet syngas from the AGRs into SNG. After undergoing methanation, the SNG will be dried to ensure that it will meet the specifications for pipeline quality natural gas. A small amount of this product SNG will then be separated for use in the upstream processes, including the gasifier pilots, SRU burners, flare pilots, thermal oxidizer pilots, and the coal drying process. The remaining SNG product will either be fed to the CTGs or compressed and exported to the natural gas pipeline. The disposition (CTG or pipeline) will depend upon the market for electric power and natural gas at the time.

3.5.3 Carbon Outputs

The CO_2 captured for storage will be separated in the AGR unit, compressed, and exported via pipeline for use in EOR and/or local disposition. See Section 4.0, Management of Captured CO_2, for information regarding the transport, use, and storage of the Facility's captured CO_2.

CO_2 will not be vented to the atmosphere under normal Facility operations. However, Facility operations will include processes that will safely vent some or all of the CO_2 produced during CTG start-ups, shutdowns, and upsets, and potentially during CO_2 pipeline outages.

Under normal operating conditions, the primary CO_2 emission point will be the Power Block HRSG stacks. SNG combustion in the CTGs will convert methane to CO_2. Heat will be recovered from the CTG exhaust (flue gas) in the HRSG with the gas ultimately exiting the HRSG stacks. This stream will represent the majority of the CO_2 emitted from the Facility.

The Facility will also vent the following miscellaneous streams of CO_2 as a result of fuel combustion:

- Coal drying system
- Vent from coal feeding vessels
- Thermal oxidizer pilot burners
- Flare pilot burners

The Facility may not produce enough SNG to fully fuel both CTGs under certain ambient conditions. However, the Power Block will not always operate at full output. When the Power Block is operated at reduced load, the Facility will export SNG. CO_2 emitted by third parties upon combustion of the SNG after it has been sold and exported via the natural gas pipeline system is not treated as CO_2 emissions from the Facility under applicable reporting rules (40 CFR Part 98, 40 CFR Part 75).

3.5.4 Effect of Power Block Dispatch

In order to fully fuel the CTGs, supplement natural gas may be required. However, both CTGs will not run at full output all of the time. When only one CTG is operating, excess SNG will be exported. CCG modeling has indicated that the Power Block capacity factor will be approximately 75% in the 2017 modeling year.

The data, equation, and calculations in the Table below represent the carbon/CO_2 balance of the Facility. Based on the information provided in IRS Notice 2009-24, only the CO_2 emitted during normal plant operations should be included in that balance. Section 3.03(2) of the Notice indicates that CO_2 emitted during "periods of initial plant certification, plant startup, plant shutdown, integrated gasifier shutdown for gasification system maintenance, or interruption of the coal supply to the Facility that results from an event of force majeure" are to be excluded.

Table 1: SAMPLE FACILITY CO_2 BALANCE

Item	Metric Tons [1] CO_2 / year [2]
Coal Input	3,033,107
HRSG Stack Emissions (@ 75% Capacity Factor)	1,416,780
Minor Vents' Emissions	40,816
CO_2 Product Vent Emissions	0
Unconverted Carbon	90,703
Net SNG Import [3]	424,964
CO_2 Captured and Exported for EOR/ Storage	(Balance)

(1) One metric ton equals 1,000 kilograms or 2,205 pounds.
(2) Annual Values Based on 85% SNG Island availability, 92% Power Island availability, and 75% Power Island dispatch capacity factor
(3) SNG Values are all net import due to Power Island capacity factor assumption

$$CO_2\ \text{Capture}\cdot(\%) = \left[1 - \frac{\text{Total Emissions (tonnes)}}{\text{Potential to Emit (tonnes)}}\right]\cdot 100\ \%$$

$$CO_2\ \text{Capture}\ (\%) = \left[1 - \frac{\text{HRSG Stacks} + \Sigma\,\text{Minor Vents} + CO_2\ \text{Product Vent}}{(\text{Coal Input} - \text{Unconverted}) + (\text{Natural Gas Input} - \text{SNG Export})}\right]\cdot 100\ \%$$

$$CO_2\ \text{Capture}\ (\%) = \left[1 - \frac{(1{,}416{,}780 + 40{,}816 + 0)}{(3{,}033{,}107 - 90{,}703) + (424{,}964 - 0)}\right]\cdot 100\ \% \qquad CO_2\ \text{Capture}\ (\%) = 56.7\ \%$$

4.0 Management of Captured CO_2

CCG plans to deliver the captured CO_2 to a pipeline for transport and use in EOR. However, it is also investigating the feasibility of local geological storage as a backup strategy. Both are discussed below.

4.1 Transport and Use of CO_2 for Enhanced Oil Recovery (EOR)

Denbury Onshore LLC (Denbury) has proposed to expand its CO_2 pipeline system from Illinois to the Gulf Coast. As a result, Denbury will require additional supplies of CO_2. The Gulf Coast

oil fields have an established CO_2 demand for purposes of EOR and could benefit from access to additional CO_2 supplies. CCG has entered into an off-take agreement with Denbury to connect with and deliver CO_2 to its planned pipeline. In doing so, CCG will transfer title to the CO_2 to Denbury.

4.2 Geologic Storage in Mt. Simon Formation

CCG is also studying the feasibility of local geologic storage in the Mt. Simon formation as a backup CO_2 storage strategy. The Mt. Simon is a sandstone formation with characteristics that suggest it could be used to indefinitely store CO_2. The Mt. Simon formation is the thickest and most widespread saline formation in the Illinois Basin, with an estimated CO_2 storage capacity of 27 to 109 billion metric tons. The formation occurs across central Illinois and is overlain by a thick regional seal of a low permeability mix of siltstones, dolomite, and shale. This overlying formation (caprock) is known as the Eau Claire and ranges from 300 to 350 feet thick in the area of the Site. The caprock is not penetrated by any nearby wells and the nearest major faults are over 35 miles away. These significant distances from penetrations and faults reduce the risk of CO_2 leakage. See: "An Assessment of Geological Carbon Sequestration Options in the Illinois Basin", Robert Finley, Illinois State Geological Survey - December, 2005.

The Mt. Simon has been used for natural gas storage for over 50 years. This history supports the reliability of the caprock and the injection capability of the Mt. Simon. It also provides reliable information on how to design wells, conduct monitoring and operations, and demonstrate the Mt. Simon formation's integrity.

CCG engaged Schlumberger Carbon Services to conduct a CO_2 storage-site characterization study. A two-dimensional seismic survey was conducted. The characterization study report addresses CO_2 injection for 30 years of operation. The seismic data was entered into a detailed reservoir model that was used to update the current storage field base case design. The model estimated how many injection wells would be required and their anticipated spacing, design, and potential plume size. The model also showed how and where the plume would likely migrate during injection and after injection ceases. The data and the model will be used to obtain

necessary permits and acquire associated subsurface rights if development of the storage field is pursued.

The current base case includes one injection well at the Site, with two additional wells located 2 miles apart north of the Site, all connected by a pipeline. The CO_2 pipeline would run through agricultural land, paralleling the natural gas interconnect line that will be built north of the Facility along N1400E Road. The base case storage field and pipeline locations were chosen to minimize land use interference and acquisition issues.

CCG made application to the IEPA for a Class I (nonhazardous) UIC permit.

ATTACHMENT I

SITE ARRANGEMENT

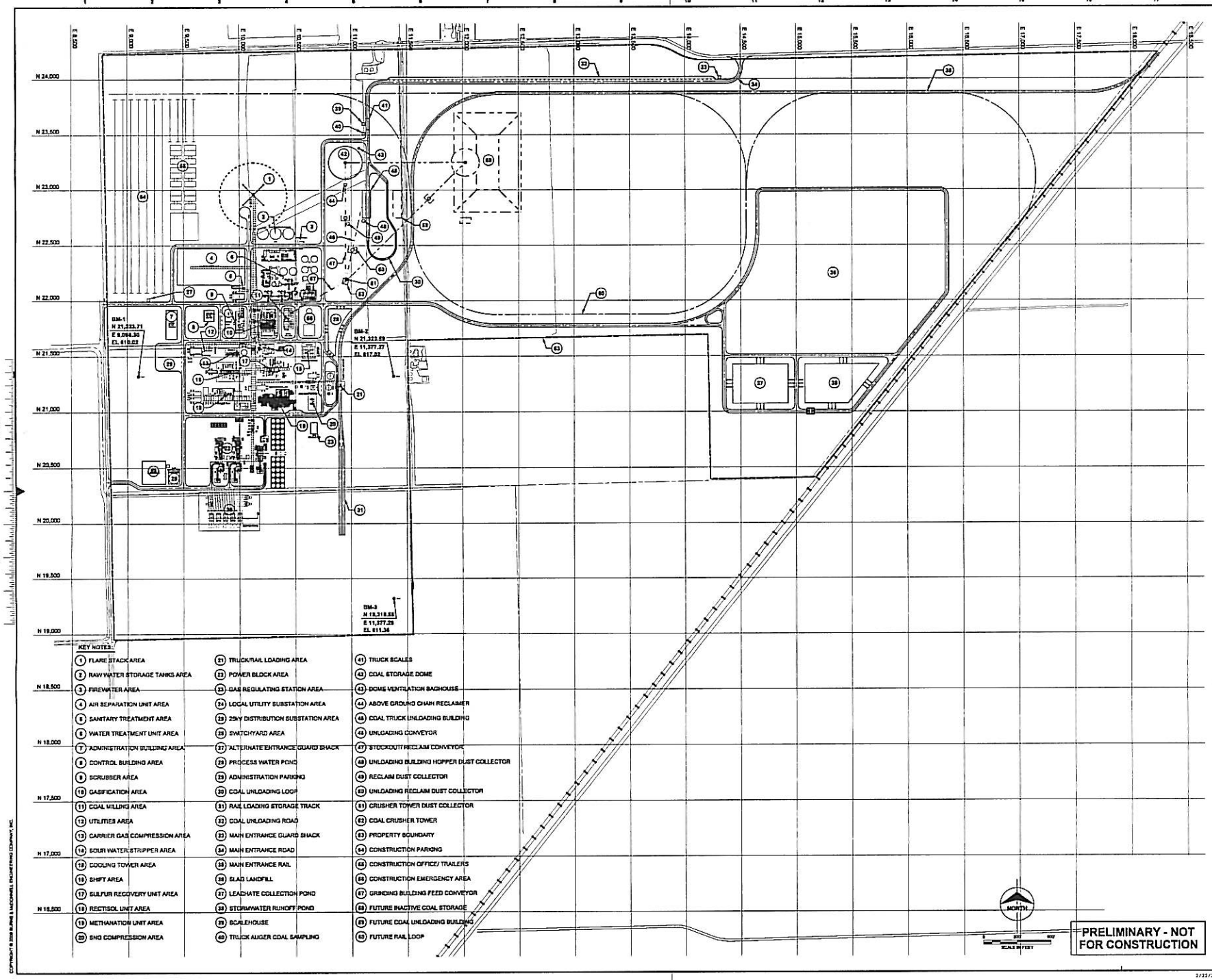

KEY NOTES:

1. FLARE STACK AREA
2. RAW WATER STORAGE TANKS AREA
3. FIREWATER AREA
4. AIR SEPARATION UNIT AREA
5. SANITARY TREATMENT AREA
6. WATER TREATMENT UNIT AREA
7. ADMINISTRATION BUILDING AREA
8. CONTROL BUILDING AREA
9. SCRUBBER AREA
10. GASIFICATION AREA
11. COAL MILLING AREA
12. UTILITIES AREA
13. CARRIER GAS COMPRESSION AREA
14. SOUR WATER STRIPPER AREA
15. COOLING TOWER AREA
16. SHIFT AREA
17. SULFUR RECOVERY UNIT AREA
18. RECTISOL UNIT AREA
19. METHANATION UNIT AREA
20. SNG COMPRESSION AREA
21. TRUCK/RAIL LOADING AREA
22. POWER BLOCK AREA
23. GAS REGULATING STATION AREA
24. LOCAL UTILITY SUBSTATION AREA
25. 25kV DISTRIBUTION SUBSTATION AREA
26. SWITCHYARD AREA
27. ALTERNATE ENTRANCE GUARD SHACK
28. PROCESS WATER POND
29. ADMINISTRATION PARKING
30. COAL UNLOADING LOOP
31. RAIL LOADING STORAGE TRACK
32. COAL UNLOADING ROAD
33. MAIN ENTRANCE GUARD SHACK
34. MAIN ENTRANCE ROAD
35. MAIN ENTRANCE RAIL
36. SLAG LANDFILL
37. LEACHATE COLLECTION POND
38. STORMWATER RUNOFF POND
39. SCALEHOUSE
40. TRUCK AUGER COAL SAMPLING
41. TRUCK SCALES
42. COAL STORAGE DOME
43. DOME VENTILATION BAGHOUSE
44. ABOVE GROUND CHAIN RECLAIMER
45. COAL TRUCK UNLOADING BUILDING
46. UNLOADING CONVEYOR
47. STOCKOUT/RECLAIM CONVEYOR
48. UNLOADING BUILDING HOPPER DUST COLLECTOR
49. RECLAIM DUST COLLECTOR
50. UNLOADING RECLAIM DUST COLLECTOR
51. CRUSHER TOWER DUST COLLECTOR
52. COAL CRUSHER TOWER
53. PROPERTY BOUNDARY
54. CONSTRUCTION PARKING
55. CONSTRUCTION OFFICE/ TRAILERS
56. CONSTRUCTION EMERGENCY AREA
57. GRINDING BUILDING FEED CONVEYOR
58. FUTURE INACTIVE COAL STORAGE
59. FUTURE COAL UNLOADING BUILDING
60. FUTURE RAIL LOOP

PRELIMINARY - NOT FOR CONSTRUCTION

no.	date	by	ckd	description
A	07/31/08	DWK		ISSUED FOR OWNER REVIEW
A	08/13/08	DWK		ISSUED FOR OWNER REVIEW
A	08/25/08	DWK		ISSUED FOR OWNER REVIEW
A	09/17/09	DWK		ISSUED FOR OWNER REVIEW
A	01/20/10	DWK		ISSUED FOR OWNER REVIEW
A	02/22/10	DWK		ISSUED FOR OWNER REVIEW

Burns & McDonnell

date JULY 20, 2009
detailed C. ALTES
designed D. KUNSTEL
checked

TENASKA

TAYLORVILLE ENERGY CENTER
IGCC FACILITY
TAYLORVILLE, IL

CIVIL ARRANGEMENT

OVERALL CIVIL SITE ARRANGEMENT

project 52297
contract
drawing CA001 — rev. E
sheet of sheets
file 52297CA001.DGN

2/22/2010 c_altes

COPYRIGHT © 2009 BURNS & MCDONNELL ENGINEERING COMPANY, INC.

ATTACHMENT II

FACILITY CHARACTERISTICS

ATTACHMENT II

Taylorville Energy Center – Facility Characteristics

Project Components	Description
Coal Handling and Preparation	
Coal transportation	Options • Future Rail - Norfolk Southern Railroad interconnection at Site's east boundary • Truck
Coal storage	7-day capacity – covered by dome; Future 60-day capacity – open storage with polymer sealant
Coal grinding and milling	1 unit per gasifier
Substitute Natural Gas (SNG) Island	
Air separation unit (ASU)	1 unit
Gasifiers	2 Siemens gasifiers
Particulate scrubber	1 per gasifier train
Syngas shift (steam shift reactor)	2 units
Mercury removal activated carbon beds	1 online and 1 standby
Acid gas removal (AGR) (sulfur, CO2 removal)	1 Rectisol unit
CO_2 stack	1 stack
CO_2 compression	CO_2 compressed for pipeline transport to EOR and geologic storage
Sulfur recovery unit (SRU)	2 Claus units
Tail gas treatment unit	2 units
Thermal Oxidizer	1 unit
Caustic scrubber	1 unit
Cooling Tower	1 unit
Methanation (produce SNG from syngas)	1 unit
Flare stack	1 unit
Power Island/Power Block	
Combustion turbine-generator (CTG)	2 units
Heat recovery steam generator (HRSG)	2 (1 for each CTG with 650 million Btu/hr duct firing)
Selective catalytic reduction (SCR)	2 (1 for each HRSG)
Steam turbine-generator (STG)	1 unit
Air cooled condenser	1 unit
HRSG stack	2 (1 for each HRSG)
Onsite Supporting Facilities	
Rail Track	Track to accommodate loading of sulfur; future 10,500 feet long loop to accommodate 1-130 car unit train
Zero Liquid Discharge (ZLD) system	For all wastewater collected
Underground storage tank(s) (UST)	None
Ponds (storm water management)	Per Attachment I, 4 onsite ponds
Switchyard	1-345kV onsite

Operating Characteristics	Volume
Load Output	
Electric generating capacity	Nominal 760 MW gross
Estimated Year 2017 Output	3.9 billion kilowatt-hours of electricity
Availability Factor	85 percent for SNG Island and 92 percent for the Power Island
Fuel consumption	
Illinois Bituminous Coal	1.75 million tons per year
Natural Gas	14 million standard cubic feet per day (annual average at an SNG production availability of 85% and a 75% power block capacity factor)
Water requirements	
Average water use	1.8 million gpd
Peak water use	2.0 million gpd
Air emissions	See application for amendment to PSD permit
Carbon balance	See Section 3.5 of the Project Description
Effluent discharges	
Industrial wastewater	0 gpd (use ZLD)
Sanitary wastewater	0 gpd (Onsite sewage treatment system; Water is recycled; Sludge trucked to offsite landfill)
Cooling tower blowdown	0 gpd (use ZLD)
Solid wastes	
Filter cake from gasification process	400 tpd
ZLD solids from water treatment	80 tpd
CO_2 vent stack	None during normal operation
Workers	
Construction, average	1,300
Construction, peak	2,470
Operations	155 (employees and contractors)
Marketable byproducts	
CO_2	2.1 million tpy
Slag (including filter cake & char), wet	1,030 tpd
Sulfur	Up to 190 tpd

MW megawatts
tpd tons per day
tpy tons per year
gpm gallons per minute
gpd gallons per day
kV kilovolt

ATTACHMENT III

SITE LOCATION

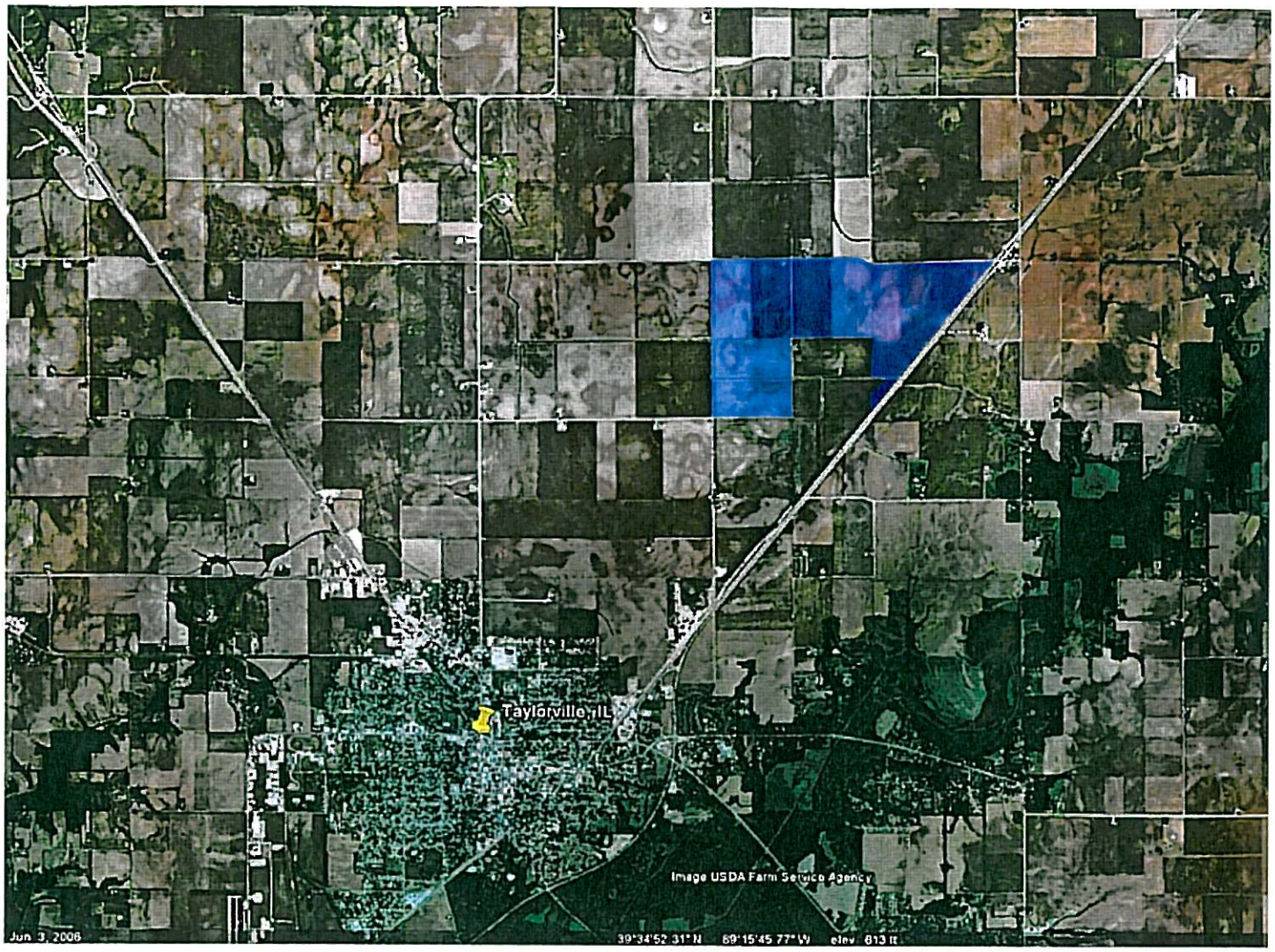
Taylorville, IL
Image USDA Farm Service Agency
Jun 3, 2006
39°34'52.31" N 89°15'45.77" W elev 813 ft

ATTACHMENT IV

INTERCONNECTIONS LOCATION MAP

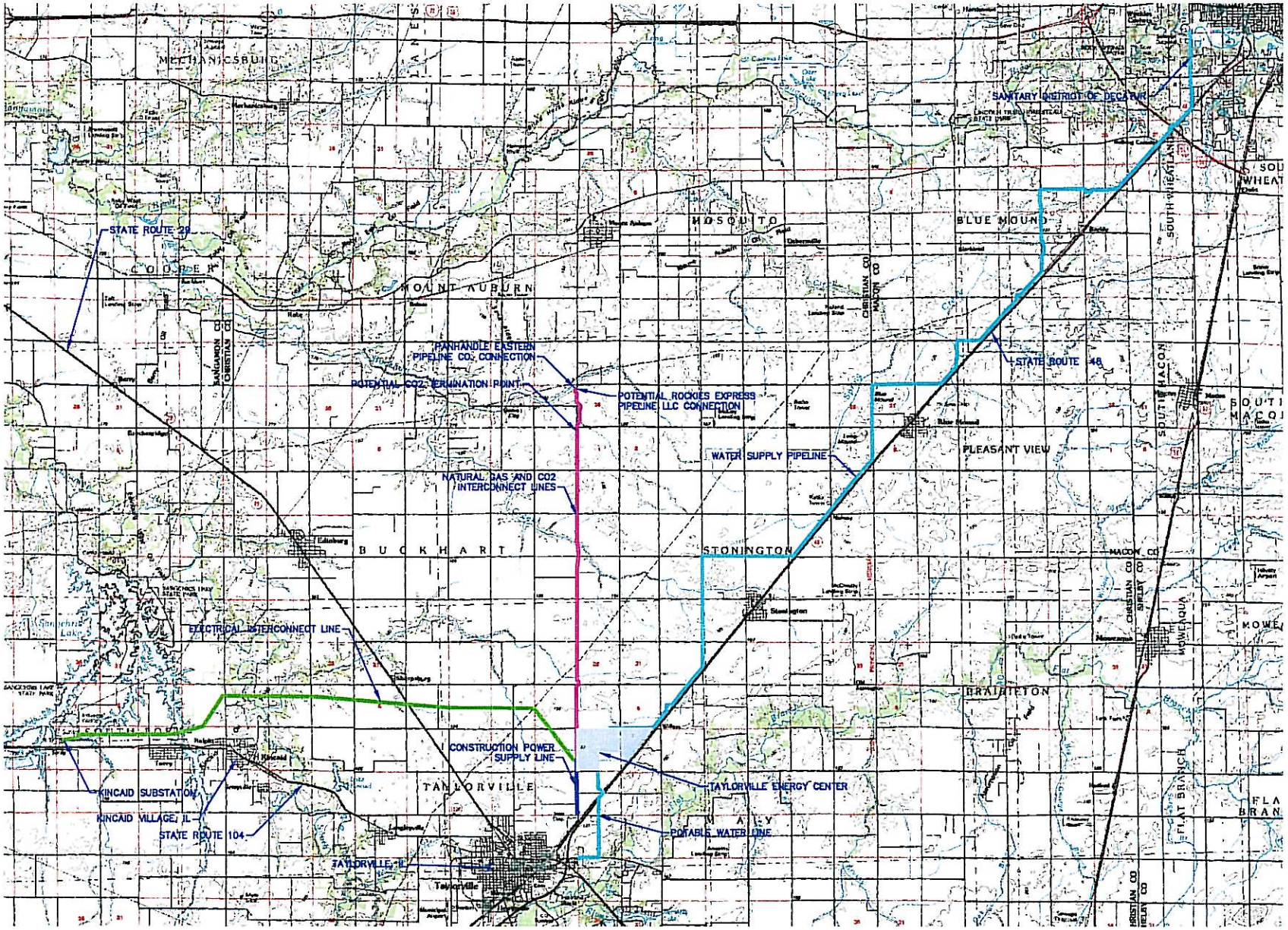

REV	DATE	DESCRIPTION

ISSUED & REVISIONS

PATRICK ENGINEERING INC.

Client: TENASKA TAYLORVILLE, LLC.

Project: TAYLORVILLE ENERGY CENTER CONNECTION CORRIDORS - PHASE I STUDY

Sheet Title: PRELIMINARY OVERALL PLAN

Project No.	20903.027	Date	9/25/09
Designed By	JWD	Sheet No.	1
Drawn By	JWD		
Checked By	MEM		
Approved By	CJB		

ATTACHMENT V A

DESCRIPTIONS OF FACILITY INTERCONNECTIONS

ATTACHMENT V A

Taylorville Energy Center – Description of Facility Interconnections

Interconnection	Description
Electrical	Off-take and auxiliary power – 14-mile, 345-kV transmission line to interconnect with PJM System at Commonwealth Edison's Kincaid substation Construction and emergency backup power – 1.25 mile Shelby Electric Cooperative 138-kV line for up to 13 MW to interconnect at the NE Taylorville substation
Natural gas/SNG	Up to 12-inch diameter, 8.5-mile bi-directional pipeline from Facility to existing Panhandle Eastern Pipeline (PEPL) north of the Site
CO_2	EOR • Connect to future Denbury CO_2 pipeline at Site boundary Possible Geologic Storage • Potential for geologic storage in Mt Simon formation • 1 onsite, up to 3 offsite injection wells; base case has 2 offsite wells, 2 miles apart • Pipeline up to 7.5 miles north of TEC site, co-located in planned natural gas pipeline corridor
Highway	Access roads from E1700N Road on the north side of the Site and from N1400E Road on the west side of the Site Approximately 6 miles of E1700N Road between State Roads 29 and 48 will be resurfaced to meet Facility construction and operating requirements (80,000 pounds gross vehicle weight)
Rail	Connect to Norfolk Southern Railroad (NSRR) adjacent to Site
Process Water	Treated municipal effluent from Sanitary District of Decatur (SDD) transported to the Facility for use as process water through a 16-inch diameter, approximately 26-mile pipeline that will generally follow State Route 48. Pipeline to be sited, constructed, managed by SDD.

Interconnection	Description
Potable Water	3-mile, 8-inch diameter pipeline from City of Taylorville Public Water Supply; pipeline to be sited, constructed, managed by City of Taylorville. Pipeline will be located within easements acquired and annexed by City of Taylorville pursuant to Ordinances 2971 and 2972.
Wastewater	Zero Liquid Discharge (ZLD) system will recover and recycle all water discharges, including process wastewater
Sanitary Wastewater	Packaged on-site treatment system
Communications	Connect to local telephone and internet provider systems

ATTACHMENT V B

TYPICAL INTERCONNECTION RIGHTS-OF-WAY WIDTHS AND CONSTRUCTION PROCEDURES

Attachment V B

Typical Interconnection Rights-of-Way Widths and Construction Procedures

The table below summarizes the typical permanent right-of-way (ROW) widths and the temporary ROW widths in addition to the permanent widths necessary to construct the various off site interconnections for the Taylorville Energy Center.

	Permanent ROW	Temporary ROW
Process Water Supply	30-50	15-20
Potable Water	30-50	15-20
Natural Gas Pipeline	30-50	15-20
Carbon Dioxide Pipeline	30-50	15-20
Electrical Transmission	150	--
Construction Power Supply	100	--
Note: Natural Gas Line and CO2 Line will occupy the same corridor.		

Table 1 - Typical Easement Width (Feet)

Brief Construction Procedures

Process Water and Potable Water Supply

During water pipeline construction, materials (pipe, stone bedding, etc.) will be staged along the pipeline easement or trucked in as necessary. The trench will be excavated and dewatered in accordance with applicable Federal, State, and local regulations, laws and rules. The excavated soils will be stockpiled alongside the trench within the easement. The pipe bedding material will then be placed and compacted within the trench. The pipe will be installed above the bedding and further bedding placed and compacted around the outside and top of the pipe. The remainder of the trench will then be backfilled in uniform layers and properly compacted with a slight mound above the top of the trench. The work area and any other disturbed areas will be cleaned and restored to their original conditions (i.e. excess soil removed, seeding, pavement replaced, etc.).

Construction within easements will be confined to the easement area unless the contractor makes other arrangements with the property owner. Agricultural areas can be replanted following completion of construction.

Construction within road ROWs may require temporary lane closures. If so, traffic from each direction would be alternated at regular intervals along the open lane, so as not to cause unreasonable delays. The contractor would provided appropriate signage alerting and instructing traffic, barricades around the construction zone, and a flagger at either end of the construction zone. Trenchless construction methods (submerged boring or

drilling) could be used for many of the road crossings. Construction across driveways would be staged so that vehicle access to property was maintained at all times.

Natural Gas and CO2 Pipelines

Before beginning construction of these pipelines, the boundaries of the work area will be defined by a surveyor staking out the work area. Then materials will be staged along the ROW. The contractor will start at one end of the ROW and perform conventional trenching on uplands and minor waterways using best management practices (silt fences, hay bales, gravel/stone entry/exit points, culverts, etc.), as necessary. Road crossings will be bored or drilled. The pipe will then be installed and backfilled and the work area restored to its original condition.

Construction impacts will normally be confined to access roads into the temporary right-of-way (TROW), and the actual TROW, which will contain the contractor work area and equipment and material laydown area. Bore sites and directional drilling sites will require additional area for set up of equipment and construction.

345kV Transmission Line

For the 345kV transmission line, all work will take place within the permanent ROW. The initial step in the construction procedure will be to clear the ROW of trees and brush. Then the structures and materials will be delivered and staged along the ROW. The foundations will be framed and constructed. the poles will be set and the wires will be hung. After the power line structures are in place and the conductors are strung between the structures, the disturbed areas will be restored. The soil in the disturbed areas will be reshaped and contoured to its original condition. Reseeding will follow landowner requirements. All litter and other remaining materials will be removed from the ROWs and construction areas and properly disposed.

ATTACHMENT VI

BLOCK FLOW DIAGRAM

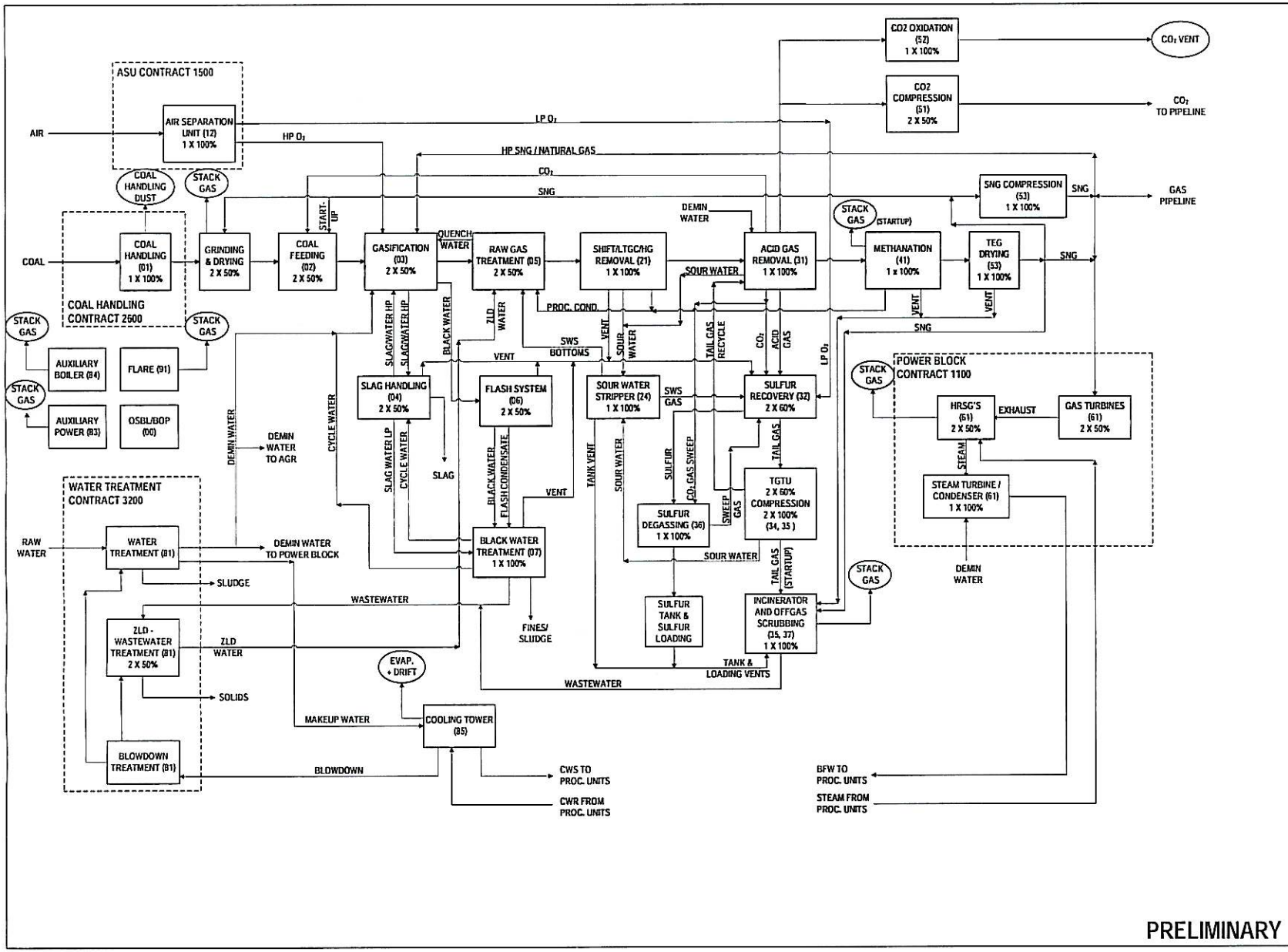

PRELIMINARY

NO.	DATE	BY	REVISION
A	03/26/09	APH	For Review
B	06/2609	APH	For Review
C	07/06/09	APH	For Review
D	11/06/09	APH	For Estimate
E	12/23/09	APH	For Estimate
F	01/29/10	APH	For CRE2 Estimate

LEGEND:

DESCRIPTION (AREA) SPARING PHILOSOPHY

EMISSION POINT

Burns & McDonnell SINCE 1898

TAYLORVILLE ENERGY CENTER

CHRISTIAN COUNTY GENERATION, LLC
IGCC FACILITY
TAYLORVILLE, ILLINOIS

date	03/26/09	detailed	APH
designed	APH	checked	

Detailed Block Flow Diagram

project	52174	contract	
drawing	BFD-00-0002	rev.	E

ATTACHMENT VII

WATER BALANCE

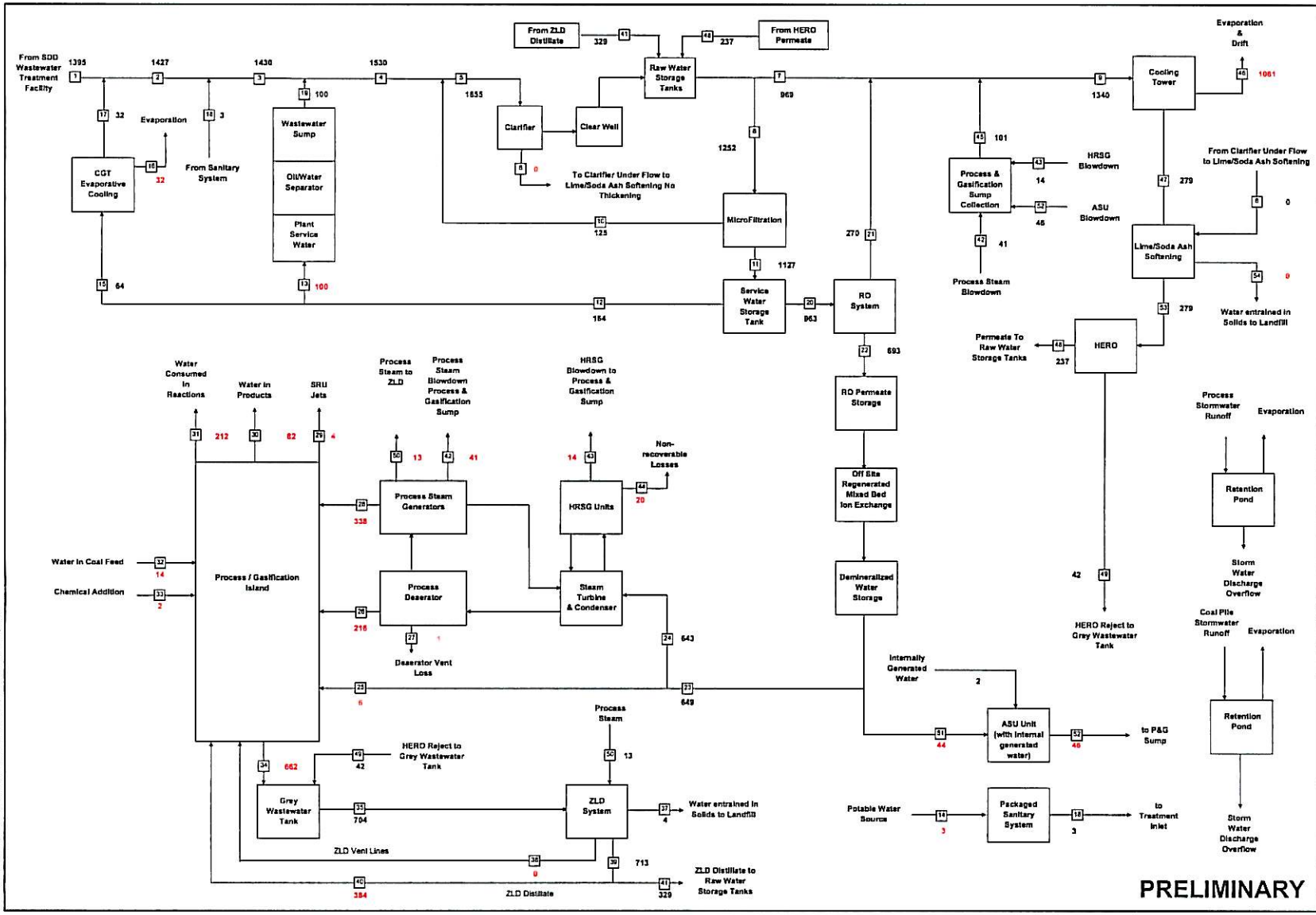

no.	date	by	chd	description
A	1/25/10	ern		Initial Issue

Notes:

1. Flows are shown in gallons per minute and rounded to the nearest gallon.
2. Cooling Tower blowdown Alkalinity is maintained at 300 PPM by acid Feed. Additional SO_4 included in balance.
3. Demineralized water quality assumed to meet boiler feedwater and turbine manufacturers specifications.
4. Concentrations in Filter Cake assumed to be the same as in filtered water without contact with solids.
5. Potable water assumed to meet national water quality standards.
6. Two pass RO estimated permeate flow 72% of inlet.
7. Microfiltration assumed to have 10% reject flow.
8. HERO reject estimated to be 15% of feed flow.
9. Assume 15% solids in Clarifier underflow.
10. Flow line number 36 not used.

DESIGN CRITERIA:

FUEL	Syngas
COOL TOWER CYCLES OF CONCENTRATION	4.6

Burns & McDonnell SINCE 1898

date 1/25/2010	detailed E. Nelson
designed E. Nelson	checked

Water Balance Diagram

0.245% Coal Temperature 90 °F
110% Max Load Rate with Hero

project 52297	contract
drawing WMB-09	rev. — A
sheet 1 of 2 sheets	
file WMB Taylorville ZLD-HERO-1(Rev C)-2 working.xls	

COPYRIGHT © 2009 BY BURNS & McDONNELL ENGINEERING COMPANY, INC.

ATTACHMENT VIII A

TANKS

Attachment VIII A

Taylorville Energy Center - Tanks

	Number of Storage Tanks	Volume Per Tank (gallons)	Tank Dimensions
Water Treatment (General & Gasifier Grey Water Building			
Raw Water	3	2,000,000	100' D x 40' H
Reclaim Clear Well	1	40,000	TBD
Service Water / Fire Water	2	2,000,000	100' D x 40' H
Demineralized Water	2	1,000,000	55' D X 57' H
Preconcentrator Distillate	1	165,000	TBD
Grey Water	2	1,000,000	55' D X 57' H
Cooling Tower Grey Blowdown	1	100,000	26' D X 28' H
Aqueous Ammonia (Auxiliary Boiler)	1	400	tote (44" L X 50" W X 61.25" H)
Polymer	2	400	tote (44" L X 50" W X 61.25" H)
Sodium Hydroxide	1	400	tote (44" L X 50" W X 61.25" H)
Sodium Hypochlorite	4	400	tote (44" L X 50" W X 61.25" H)
Oxygen Scavenger	2	400	tote (44" L X 50" W X 61.25" H)
Phosphate	3	400	tote (44" L X 50" W X 61.25" H)
Neutralizing Amines	2	400	tote (44" L X 50" W X 61.25" H)
Antifoam	1	1,800	7' D X 9' H
Antiscalant	1	1,800	7' D X 9' H
Calcium Chloride	1	14,400	13' D X 15' H
Caustic Storage	1	10,000	12' D X 14' H
Crystallizer Distillate	1	8,000	11' D X 13' H
Acid Storage	1	10,000	12' D X 14' H
Centrifuge Feed (mixed)	1	1,000	6'D X 8' H
Coagulant Flash	1	10,000	12" D X 14' H
Crystallizer Feed	1	2,000	7'D X 9' H
Demineralizer Building			
Antiscalant	1	400	tote (44" L X 50" W X 61.25" H)
Caustic Storage	1	3,000	8' D X 10' H
1st Pass RO Break	1	10,000	12' D X 14' H
Polymer	1	400	tote (44" L X 50" W X 61.25" H)
CIP	1	2,000	7' D X 9' H
RO Product	1	12,000	12' D X 14' H
Sodium Bisulfite	1	400	tote (44" L X 50" W X 61.25" H)
Sodium Hypochlorite	1	6,500	10' D X 12' H
Acid Storage	1	3,000	8' D X 10' H

DRAFT

Attachment VIII A

Taylorville Energy Center - Tanks

	Number of Storage Tanks	Volume Per Tank (gallons)	Tank Dimensions
Cooling Tower Blowdown Building			
Antiscalant	1	400	tote (44" L X 50" W X 61.25" H)
Caustic (Sodium Hydroxide)	1	3,000	8' D X 10' H
Clearwell sump	1	10,000	12' D X 14' H
Coagulant (ferric chloride)	1	2,000	7' D X 9' H
HERO Permeate	1	10,000	12' D X 14' H
HERO Reject	1	2,000	7' D X 9' H
Polymer	1	400	tote (44" L X 50" W X 61.25" H)
RO CIP Tank	1	2,000	7' D X 9' H
Sodium Bisulfite	1	400	tote (44" L X 50" W X 61.25" H)
Sulfuric Acid (Acid Mixing)	1	2,000	7' D X 9' H
Sulfuric Acid (Storage)	1	15,000	14' D X 16' H
WAC Regeneration Waste	2	35,000	TBD
Cooling Tower			
Scale inhibitor	1	400	tote (44" L X 50" W X 61.25" H)
Sulfuric acid	1	6,000	11' D x 10' H (est.)
Sodium hypochlorite	1	6,000	11' D x 10' H (est.)
Bromine	1	400	tote (44" L X 50" W X 61.25" H)
Soda Ash (sidestream softener)	1	Silo 5,000 ft3)	14' D X 32' H
Lime (sidestream softener)	1	Silo 4,500 ft3)	14' D X 30' H
Coagulant (sidestream softener)	1	400	tote (44" L X 50" W X 61.25" H)
Polymer (sidestream softener)	1	400	tote (44" L X 50" W X 61.25" H)
SNG Island			
Methanol	1	730,000	62' D X 40' L
Quinoline	1	82	small tote
Caustic Solution (SRU, 10%, wt)	1	315 (nominal)	TBD
Power Island & Common Facilities			
Sulfuric Acid Storage	1	7,000	10' D X 12' H
Anhydrous Ammonia	1	12,000	8' D X 32'L
Boiler Feedwater Treatment	-	<500	TBD
Caustic	1	48,600	20' D X 24' H
Hydrogen	TBD	-	small cylinders
Sulfur	1	136,000	26' D X 32' H
TEG	1	12,000	12' D x 15' H
SWS Feed Storage Tank	1	370,750	44' D X 40'9" H
CO_2 Bladder Tank	1	70,000	50' D x 32' H
Proprietary Dust Suppression Chemicals	1	400	tote (44" L X 50" W X 61.25" H)

Diesel Fuel (fire water pump)	1	1,000	6' D X 8' H
Diesel Fuel (mobile equipment)	1	10,000	7'-5" D X 31' L
Diesel Fuel (emergency generators)	1	3,500	8' D X 11' H

TBD = To Be Determined
D = Diameter
H = Height
L - Length

ATTACHMENT VIII-B

CATALYSTS AND SORBENTS

Attachment VIII B

Taylorville Energy Center - Catalysts and Sorbents

Unit	Service	Number of Beds	Material	Expected Vendor	Active ingredients	Volume Per Bed (ft^3)	Total Volume (ft^3)
Shift	Chloride Guard Bed	3	Actisorb Cl 2	Sud-Chemie	Alklylized Alumina	1010	3029
Shift	Arsenic Guard Bed	3	Actisorb 310	Sud-Chemie	Aluminum Oxide, Manganese Oxide	504	1512
Shift	First Shift Reactors	1	ShiftMax 820	Sud-Chemie	Cobalt-Molybdenum	2916	2916
Shift	Second Shift Reactor	1	ShiftMax 820	Sud-Chemie	Cobalt-Molybdenum	2916	2916
Shift	Mercury Guard Bed	2	Actisorb Hg	Sud-Chemie	Sulfided Activated Carbon	2422	4843
SRU	Claus Reactor 1	1	CRS 31	Axens	Titanium Dioxide	132	132
SRU	Claus Reactor 1	1	CR-3S	Axens	Alumina	309	309
SRU	Claus Reactor 2	1	CR-3S	Axens	Alumina	441	441
SRU	Hydrogenation Reactor	1	TG 107	Axens	Cobalt-Molybdenum	371	371
Methanation	Sulfur Guard Beds	2	Actisorb S6	Sud-Chemie	Copper-promoted Zinc Oxide	950	1900
Methanation	First Bulk Reactors	2	G1 85	BASF	Nickel	1054	2108
Methanation	Second Bulk Reactors	2	G1 85	BASF	Nickel	952	1904
Methanation	Trim (Third) Reactor	1	G1 85	BASF	Nickel	898	898
CO2 System	Methanol Removal	1	13 X Molecular Sieve	Zeochem or BASF	Molecular Sieve	TBD	645
CO2 System	Oxidation for Vent	1	BASF VOCat 300S	BASF	Platinum	267	267

TBD = To Be Determined

ATTACHMENT IX

ENVIRONMENTAL PERMITS AND APPROVALS

ATTACHMENT IX

Taylorville Energy Center- Project Description

Environmental Permits and Approvals

Approval	Responsible Agency	Current Status	Comments
FEDERAL			
Notice of Proposed Construction or Alteration	Federal Aviation Administration (FAA) Obstruction Evaluation Services (OES)	Submission to be made following completion of structure and lighting design..	Facility is subject to 14 CFR 77.13and will submit a form 7460-1 to the FFA.
Risk Management Plan	USEPA [& IEPA]	Must be submitted prior to receipt of hazardous chemicals at the Site.	Required under 40 CFR 68 to address potential accidental releases of hazardous chemicals stored onsite greater than a threshold quantity.
Clean Water Act, Section 404 Permits	U.S. Army Corps of Engineers (USACE)	Existing Nationwide Permits cover anticipated construction in waters of the US.	Required for discharge of dredge or fill material in waters of the U.S.
Endangered Species Act, Section 7 Consultation (ESA)	US Fish and Wildlife Service (USFWS)	Incomplete. ESA Consultation was initiated by USEPA during its review of TEC PSD Permit application. USFWS concurred with USEPA's finding of No Adverse Effect to listed species on 4/16/2007.	Consultation with the USFWS will be broadened to include the proposed Site and corridors.
National Historic Preservation Act Section 106 Review	Illinois State Historic Preservation Office (SHPO)	Compliance activities for the Site will be undertaken in the 4th quarter of 2009. Compliance activities for the ancillary facility corridors will be undertaken as access is obtained.	
STATE			
Air Quality Construction/Prevention of Significant Deterioration (PSD) Permit	Illinois Environmental Protection Agency (IEPA)	A Construction Permit was issued 6/5/2007 and became effective on 1/28/08. A request to extend the permit is pending.	CCG anticipates further amendment of the permit may be required to accommodate Facility design developments.
Title IV Acid Rain Permit	IEPA	Issued 6/5/07; became effective 1/1/08; renewal application filed 5/22/08.	Necessary for compliance with sulfur dioxide (SO_2) allowance requirements.
Title V Permit to Operate	IEPA	Application to be submitted within 12 months following the start of operation.	Will incorporate all air quality permit requirements into one document.
Clean Air Interstate Rule (CAIR) Permit	IEPA	Application to be submitted in 4th quarter of 2009.	Required for compliance with ozone season and annual NO_x allowance requirements and SO_2 allowance requirements.

Approval	Responsible Agency	Current Status	Comments
Underground Injection Control [UIC] permit	IEPA	Application filed on December 15, 2009 for a Class I (nonhazardous) UIC Permit.	A test well, monitoring wells, and injection wells are included in the application.
General National Pollutant Discharge Elimination System (NPDES) Permit for Discharges of Stormwater Associated with Construction Activities	IEPA	A Notice of Intent will be filed prior to commencement of construction.	Required for storm water management during construction.
NPDES General Permit for Stormwater Discharges Associated with Industrial Activities	IEPA	To be obtained; CCG expects to file a Notice of Intent at least 6 months prior to commencement of operations	Required for storm water management during operation; requires the preparation of a Storm Water Pollution Prevention Plan.
Wastewater Facility Construction/ Operation Permit(s)	IEPA	To be obtained; CCG expects to file 2nd quarter of 2010	Required for the construction and operation of wastewater treatment facilities at the Site, including sludge, oil/water separation, industrial treatment, and sanitary wastewater treatment system.
Section 401 Water Quality Certification (WQC)	IEPA	Existing authorization. A blanket certification is applicable to activities covered by certain Nationwide 404 Permits.	Will obtain a blanket certification for file.
Facility Site & Utility Corridors			
Illinois Historic Resources Preservation Act Section 707 Consultation	Illinois Historic Preservation Office (IHPO)	Coordination required during the NEPA process; Facility Site and corridors to be reviewed.	May be required if historic properties could be located within corridors for ancillary facilities in accordance with the Illinois State Agency Historic Resources Preservation Act (20 ILCS 3420)
State Biological Assessment Approval	Illinois Department of Natural Resources (IDNR)	Clearance issued to the TEC Site 10/2/2000; optioned parcels and corridors to be reviewed.	Required to assess impact of facility on Threatened, Endangered or special-concern species. The endangered species review is valid for 2 years, therefore, this coordination will require revision and update. Further reviews by the DOE may require additional consultations.
Wetland Review	IDNR	IDNR review of owned parcels under requirements of the Interagency Wetland Policy Act completed 7/29/2005; optioned parcels and corridors to be reviewed.	IDNR review found no impacts to wetlands at the owned Facility Site; optioned parcels to be reviewed.
Landfill Development	IEPA, Division of Land Pollution Control	Required prior to development of a new landfill on site.	Requires submission of a Siting Certification Form and the general application for Permit form, plus supporting documentation.
LOCAL			
City of Taylorville Annexation Ordinance No. 2972	City of Taylorville	Issued June 22, 2000; annexation of additional Site parcels expected in mid-2010.	Required to annex owned portions of the Site into the city limits.

Approval	Responsible Agency	Current Status	Comments
Soil Conservation District Review	Soil Conservation District	Completed on July 7, 2004.	Review/approval obtained prior to and in support of rezoning (see below).
City of Taylorville Rezoning Ordinance, Ordinance No. 3183	City of Taylorville	Issued July 9, 2004; rezoning of additional Site parcels expected in mid-2010.	Required to rezone the Site from Agricultural 1 zoning classification to Industrial 3 zoning classification allowing the construction of the Facility. Christian County Soil Conservation District issued a "no objection" letter to the rezoning on 7/7/2004.
Potable Water Supply Connection Permit (Tapping permit)	City of Taylorville	Plan to file the 2nd quarter of 2010.	Must submit Site plans and drawings for review and approval.
Sewage Disposal (Septic System) Permit	City of Taylorville	Required to construct, alter, or extend individual septic systems within City limits.	Must submit plan of proposed system; IEPA issues permits for septic systems larger than 15,000 gpd, serving more than one building and/or containing non-domestic wastewater.
Building/Occupancy Permits	City of Taylorville	To be obtained after design details completed. An application will be filed in the 2nd quarter of 2010.	Required for compliance with building codes and standards.
Local Road Construction Permit	City of Taylorville	Plan to file the 2nd quarter of 2010.	