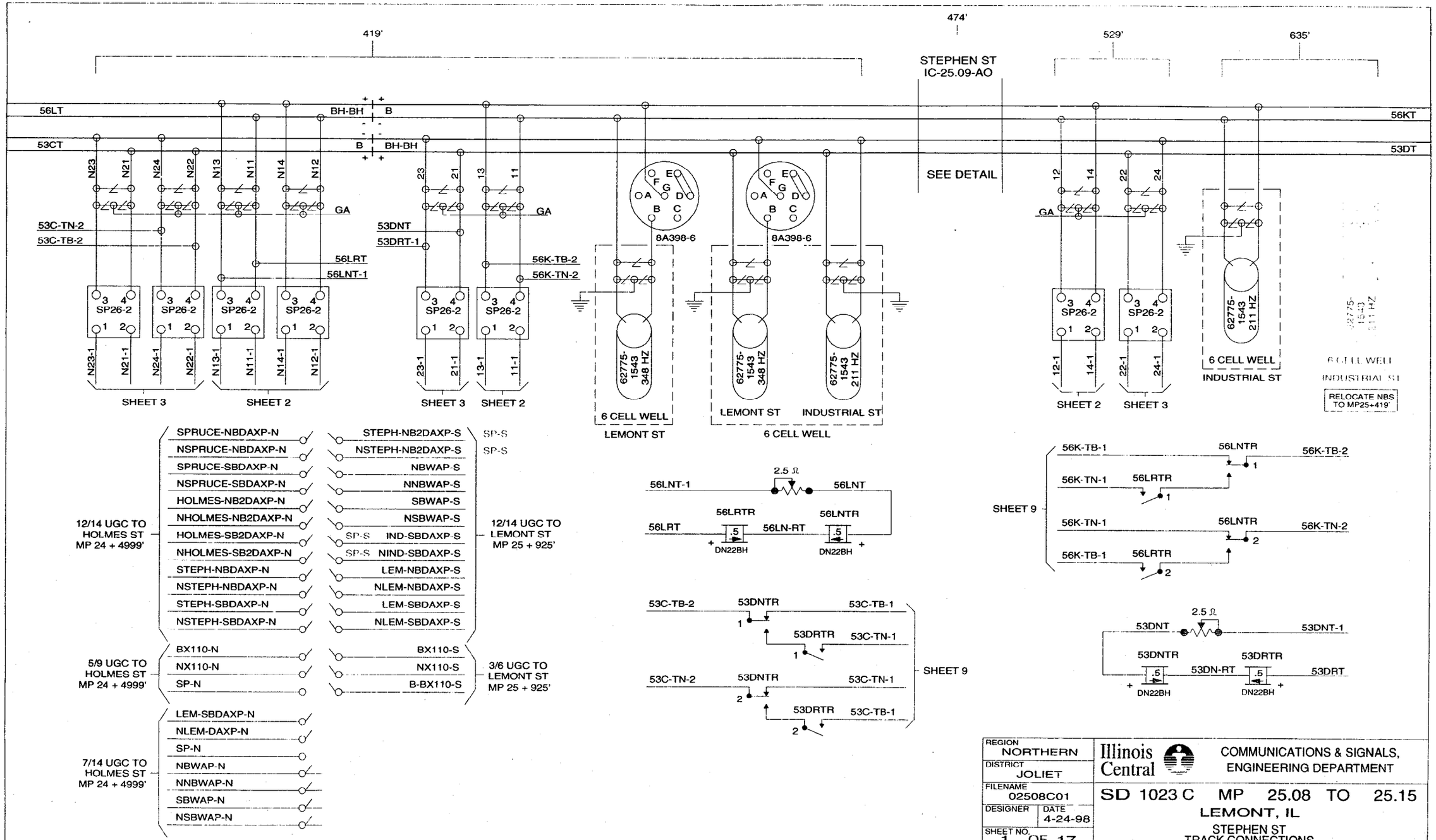

REGION	NORTHERN
DISTRICT	JOLIET
FILENAME	02508C01
DESIGNER	
DATE	4-24-98
SHEET NO.	1 OF 17

Illinois Central

COMMUNICATIONS & SIGNALS, ENGINEERING DEPARTMENT

SD 1023 C MP 25.08 TO 25.15

LEMONT, IL

STEPHEN ST
TRACK CONNECTIONS

5 4 3 2 1-13-98 1 REVISIONS

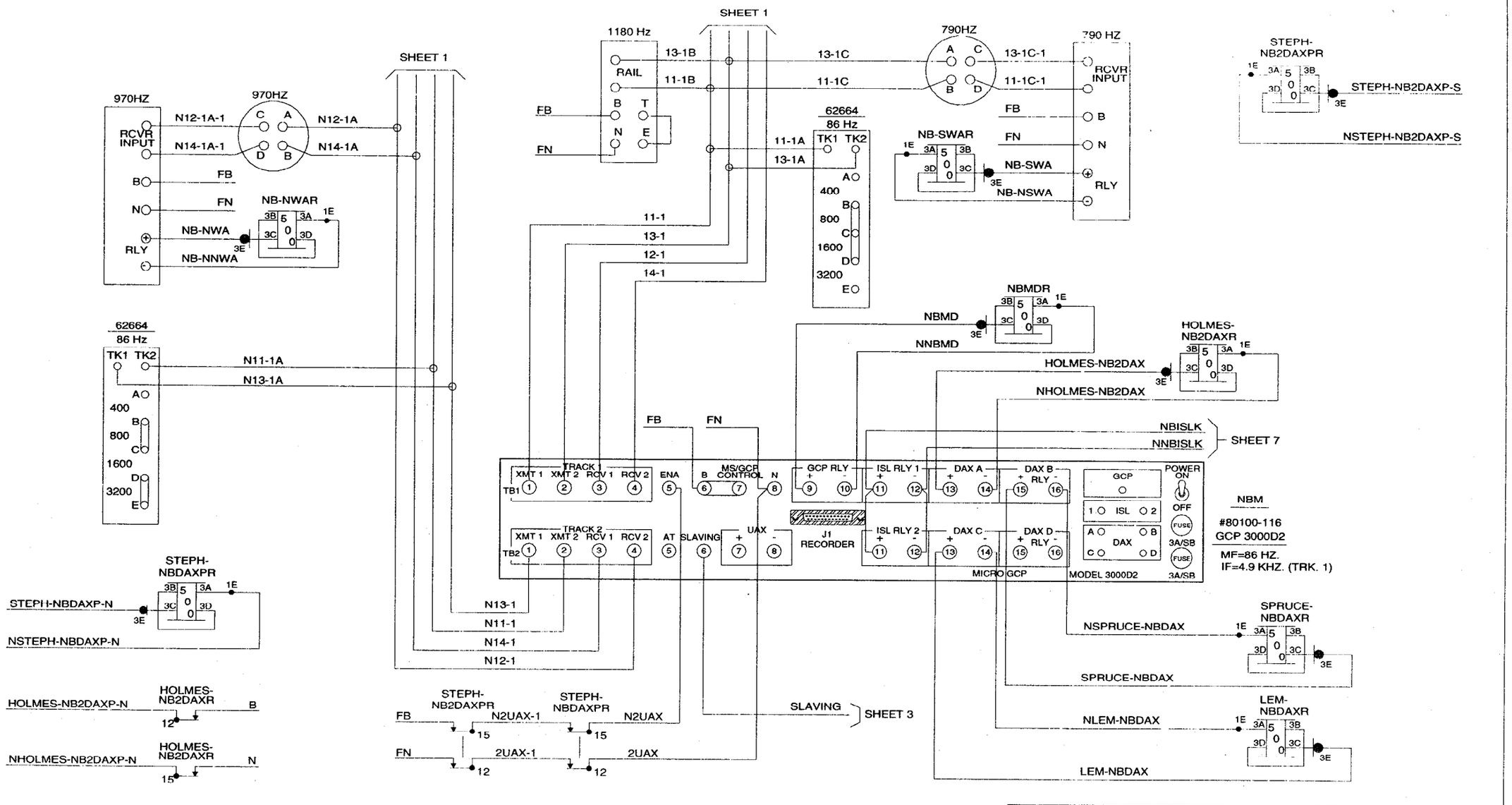

REGION NORTHERN	Illinois Central — COMMUNICATIONS & SIGNALS, ENGINEERING DEPARTMENT
DISTRICT JOLIET	
FILENAME 02508C02	SD 1023 C MP 25.08 TO 25.15
DESIGNER / DATE 4-24-98	LEMONT, IL
SHEET NO. 2 OF 17	STEPHEN ST GCP 3000 NB UNIT #1

5 4 3 2 1-13-98 1 REVISIONS

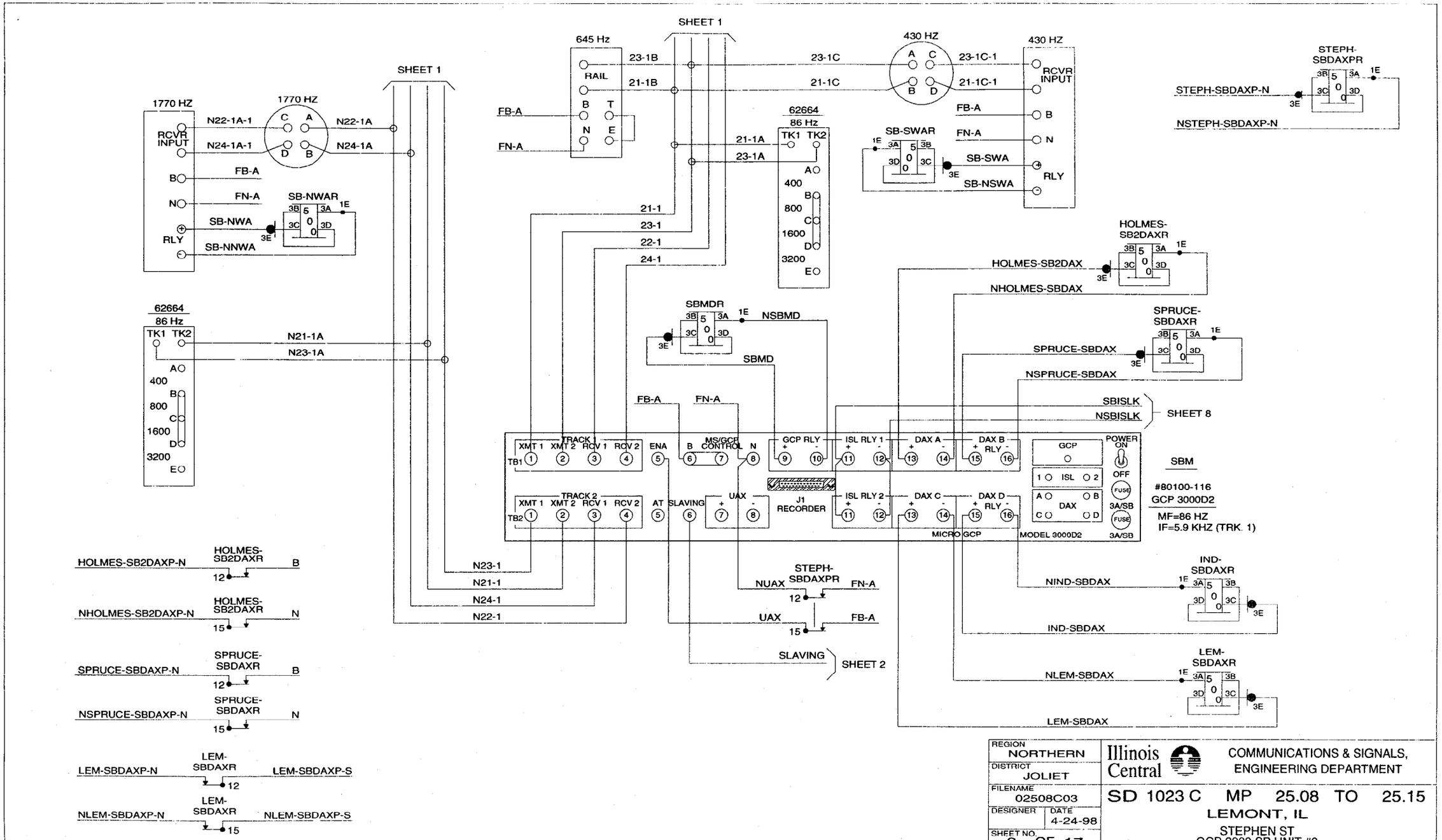

REGION NORTHERN	Illinois Central — COMMUNICATIONS & SIGNALS, ENGINEERING DEPARTMENT
DISTRICT JOLIET	
FILENAME 02508C03	SD 1023 C MP 25.08 TO 25.15
DESIGNER / DATE 4-24-98	LEMONT, IL
SHEET NO. 3 OF 17	STEPHEN ST GCP 3000 SB UNIT #2

5 4 3 2 1-13-98 1 REVISIONS

NBM

3000 GCP APPLICATION HISTORY CARD

Equipment: 3000 ☐ 3000D2 ■ Unit/Serial No: 5602 Crossing No: IC-25.09-AO

Crossing Name: STEPHEN ST City: LEMONT State: IL

Date Installed: 5-16-95 Weather: DRY

Island Frequency: T1: 4.9 kHz T2: ____ kHz

PROGRAMMING HISTORY

	Initial Programmed Value Date: 5-16-95	Program Change Date: ____	Program Change Date: ____
■ press PROGRAM key			
NUMBER OF TRACKS (Number of transceiver modules, 1 or 2)	1 ☐ 2 ■	1 ☐ 2 ☐	1 ☐ 2 ☐
FREQUENCY (MS/GCP)	86 Hz	Hz	Hz
UNIDIRECTIONAL/BIDIRECTIONAL	T1: UNI ☐ BI ■	UNI ☐ BI ☐	UNI ☐ BI ☐
	T2: UNI ☐ BI ■	UNI ☐ BI ☐	UNI ☐ BI ☐
XMIT LEVEL	T1: HI ■ MED ☐	H ☐ M ☐	H ☐ M ☐
	T2: HI ■ MED ☐	H ☐ M ☐	H ☐ M ☐
PREDICTOR/MOTION SENSOR	T1: PRED ■ MS ☐	PRED ☐ MS ☐	PRED ☐ MS ☐
	T2: PRED ■ MS ☐	PRED ☐ MS ☐	PRED ☐ MS ☐
WARNING TIME SELECTED	T1: 30 sec.	____ sec.	____ sec.
	T2: 30 sec.	____ sec.	____ sec.
APPROACH DISTANCE SELECTED	T1: 3400 ft.	3634 ft.	____ ft.
	T2: 1984 ft.	____ ft.	____ ft.
APPROACH DISTANCE COMPUTED	T1: 4374 ft.	____ ft.	____ ft.
	T2: 2917 ft.	____ ft.	____ ft.
UAX PICKUP DELAY (UAX1) (0 = OFF)	0 sec.	____ sec.	____ sec.
ENA/UAX2 DELAY (0 = ENA)	25 sec.	____ sec.	____ sec.
ISLAND DISTANCE (between island track wire connections)	T1: 120 ft.	____ ft.	____ ft.
	T2: ____ ft.	____ ft.	____ ft.
NUMBER OF DAX'S	0 ☐ 1 ☐ 2 ☐ 3 ■ 4 ☐	0 ☐ 1 ☐ 2 ☐ 3 ☐ 4 ☐	0 ☐ 1 ☐ 2 ☐ 3 ☐ 4 ☐
DAX A TRACK ASSIGNMENT	T1 ■ T2 ☐	T1 ☐ T2 ☐	T1 ☐ T2 ☐
DAX A DISTANCE (0=PREEMPT)	745 ft.	____ ft.	____ ft.
DAX A WARNING TIME	HOLMES 30 sec.	____ sec.	____ sec.
DAX B TRACK ASSIGNMENT	T1 ■ T2 ☐	T1 ☐ T2 ☐	T1 ☐ T2 ☐
DAX B DISTANCE (0=PREEMPT)	1984 ft.	____ ft.	____ ft.
DAX B WARNING TIME	SPRUCE 30 sec.	____ sec.	____ sec.
DAX C TRACK ASSIGNMENT	T1 ☐ T2 ■	T1 ☐ T2 ☐	T1 ☐ T2 ☐
DAX C DISTANCE (0=PREEMPT)	451 ft.	____ ft.	____ ft.
DAX C WARNING TIME	LEMONT 30 sec.	____ sec.	____ sec.
DAX D TRACK ASSIGNMENT	T1 ☐ T2 ☐	T1 ☐ T2 ☐	T1 ☐ T2 ☐
DAX D DISTANCE (0=PREEMPT)	____ ft.	____ ft.	____ ft.
DAX D WARNING TIME	____ sec.	____ sec.	____ sec.

PROGRAMMING HISTORY (continued)

	Initial Programmed Value Date: 5-16-95	Program Change Date: ____	Program Change Date: ____
SLAVING MASTER/SLAVE	MASTER ■ SLAVE ☐	MASTER ☐ SLAVE ☐	MASTER ☐ SLAVE ☐
PASSWORD ENABLED	DISABLED ☐ ENABLED ■	DISABLED ☐ ENABLED ☐	DISABLED ☐ ENABLED ☐
RECORDER INSTALLED	NOT INSTALLED ☐ INSTALLED ■	NOT INSTALLED ☐ INSTALLED ☐	NOT INSTALLED ☐ INSTALLED ☐
RS-232-C BAUD RATE	9600 bps	____ bps	____ bps
RS-232-C DATA BITS	7 ☐ 8 ■	7 ☐ 8 ☐	7 ☐ 8 ☐
RS-232-C STOP BITS	1 ■ 2 ☐	1 ☐ 2 ☐	1 ☐ 2 ☐
RS-232-C PARITY	NONE ■ MARK ☐ ODD ☐ SPACE ☐ EVEN ☐	NONE ☐ MARK ☐ ODD ☐ SPACE ☐ EVEN ☐	NONE ☐ MARK ☐ ODD ☐ SPACE ☐ EVEN ☐
(NOTE: SET DATE & TIME AS REQUIRED) DATE (e.g., MON 16 NOV 1987)	____	____	____
TIME (e.g., 11:25:43 AM)	____	____	____
DAYLIGHT SAVINGS	ON ■ OFF ☐		

EXPANDED PROGRAMMING HISTORY (Function Mode, Optional)

	Initial Programmed Value Date: 5-16-95	Program Change Date: ____	Program Change Date: ____
■ press FUNCTION key			
SWITCH TO MS (enter EZ value)	T1: 10 sec.	____ sec.	____ sec.
	T2: 10 sec.	____ sec.	____ sec.
TRANSFER DELAY MS TO GCP (O=OFF)	T1: 0 ft.	____ ft.	____ ft.
	T2: 0 ft.	____ ft.	____ ft.
PRIME PREDICTION OFFSET (O=OFF)	T1: 0 ft.	____ ft.	____ ft.
	T2: 005 ft.	____ ft.	____ ft.
PICKUP DELAY PRIME	15 sec.	____ sec.	____ sec.
PICKUP DELAY DAX A	15 sec.	____ sec.	____ sec.
PICKUP DELAY DAX B	15 sec.	____ sec.	____ sec.
PICKUP DELAY DAX C	15 sec.	____ sec.	____ sec.
PICKUP DELAY DAX D	N/A sec.	____ sec.	____ sec.
COMPENSATION VALUE	T1: 1000 sec.	____ sec.	____ sec.
COMPENSATION VALUE	T2: 1000 sec.	____ sec.	____ sec.

CALIBRATION HISTORY

		FULL TRACK (NO HARDWIRE SHUNT)	FULL TRACK (HARDWIRE SHUNT AT TERMINATION)	50 PERCENT TRACK (HARDWIRE SHUNT) NO LINEARIZATION	LINEARIZATION STEP +/-	LINEARIZATION EZ
EAST	track 1 EZ/EX	102 / 84	80 / 90	37 / 99	+6	40
WEST	track 1 EZ/EX	/	/	/		
EAST	track 2 EZ/EX	/	/	/		
WEST	track 2 EZ/EX	101 / 84	68 / 95	34 / 98	0	34

REGION NORTHERN	Illinois Central — COMMUNICATIONS & SIGNALS, ENGINEERING DEPARTMENT
DISTRICT JOLIET	
FILENAME 02508C04	SD 1023 C MP 25.08 TO 25.15
DESIGNER / DATE 4-24-98	LEMONT, IL
SHEET NO. 4 OF 17	STEPHEN ST NBM #1 GCP APPLICATION INFO

5 4 3 2 1-13-98 1 REVISIONS

SBM

3000 GCP APPLICATION HISTORY CARD

Equipment: 3000 ☐ 3000D2 ■ Unit/Serial No: 5601 Crossing No: IC-25.09-AO

Crossing Name: STEPHEN ST City: LEMONT State: IL

Date Installed: 5-16-95 Weather: DRY

Island Frequency: T1: 5.9 kHz T2: _____ kHz

PROGRAMMING HISTORY

	Initial Programmed Value Date: 5-16-95	Program Change Date:	Program Change Date:
■ press PROGRAM key			
NUMBER OF TRACKS (Number of transceiver modules, 1 or 2)	1 ☐ 2 ■	1 ☐ 2 ☐	1 ☐ 2 ☐
FREQUENCY (MS/GCP)	86 Hz	Hz	Hz
UNIDIRECTIONAL/BIDIRECTIONAL T1:	UNI ☐ BI ■	UNI ☐ BI ☐	UNI ☐ BI ☐
T2:	UNI ☐ BI ■	UNI ☐ BI ☐	UNI ☐ BI ☐
XMIT LEVEL T1:	HI ■ MED ☐	H ☐ M ☐	H ☐ M ☐
T2:	HI ■ MED ☐	H ☐ M ☐	H ☐ M ☐
PREDICTOR/MOTION SENSOR T1:	PRED ■ MS ☐	PRED ☐ MS ☐	PRED ☐ MS ☐
T2:	PRED ■ MS ☐	PRED ☐ MS ☐	PRED ☐ MS ☐
WARNING TIME SELECTED T1:	30 sec.	sec.	sec.
T2:	30 sec.	sec.	sec.
APPROACH DISTANCE SELECTED T1:	3400 ft.	ft.	ft.
T2:	1984 ft.	ft.	ft.
APPROACH DISTANCE COMPUTED T1:	4379 ft.	ft.	ft.
T2:	3100 ft.	ft.	ft.
UAX PICKUP DELAY (UAX1) (0 = OFF)	0 sec.	sec.	sec.
ENA/UAX2 DELAY (0 = ENA)	25 sec.	sec.	sec.
ISLAND DISTANCE (between island track wire connections) T1:	120 ft.	ft.	ft.
T2:	ft.	ft.	ft.
NUMBER OF DAX'S	0 ☐ 1 ☐ 2 ☐ 3 ■ 4 ☐	0 ☐ 1 ☐ 2 ☐ 3 ☐ 4 ■	0 ☐ 1 ☐ 2 ☐ 3 ☐ 4 ☐
DAX A TRACK ASSIGNMENT	T1 ■ T2 ☐	T1 ☐ T2 ☐	T1 ☐ T2 ☐
DAX A DISTANCE (0=PREEMPT)	745 ft.	ft.	ft.
DAX A WARNING TIME	HOLMES 30 sec.	sec.	sec.
DAX B TRACK ASSIGNMENT	T1 ■ T2 ☐	T1 ☐ T2 ☐	T1 ☐ T2 ☐
DAX B DISTANCE (0=PREEMPT)	1984 ft.	ft.	ft.
DAX B WARNING TIME	SPRUCE 30 sec.	sec.	sec.
DAX C TRACK ASSIGNMENT	T1 ☐ T2 ■	T1 ☐ T2 ☐	T1 ☐ T2 ☐
DAX C DISTANCE (0=PREEMPT)	451 ft.	ft.	ft.
DAX C WARNING TIME	LEMONT 30 sec.	sec.	sec.
DAX D TRACK ASSIGNMENT	T1 ☐ T2 ☐	T1 ☐ T2 ■	T1 ☐ T2 ☐
DAX D DISTANCE (0=PREEMPT)	ft.	3634 ft.	ft.
DAX D WARNING TIME	sec.	INDUSTRIAL 30 sec.	sec.

PROGRAMMING HISTORY (continued)

	Initial Programmed Value Date: 5-16-95	Program Change Date:	Program Change Date:
SLAVING MASTER/SLAVE	MASTER ☐ SLAVE ■	MASTER ☐ SLAVE ☐	MASTER ☐ SLAVE ☐
PASSWORD ENABLED	DISABLED ☐ ENABLED ■	DISABLED ☐ ENABLED ☐	DISABLED ☐ ENABLED ☐
RECORDER INSTALLED	NOT INSTALLED ☐ INSTALLED ■	NOT INSTALLED ☐ INSTALLED ☐	NOT INSTALLED ☐ INSTALLED ☐
RS-232-C BAUD RATE	9600 bps	bps	bps
RS-232-C DATA BITS	7 ☐ 8 ■	7 ☐ 8 ☐	7 ☐ 8 ☐
RS-232-C STOP BITS	1 ■ 2 ☐	1 ☐ 2 ☐	1 ☐ 2 ☐
RS-232-C PARITY	NONE ■ MARK ☐ ODD ☐ SPACE ☐ EVEN ☐	NONE ☐ MARK ☐ ODD ☐ SPACE ☐ EVEN ☐	NONE ☐ MARK ☐ ODD ☐ SPACE ☐ EVEN ☐
(NOTE: SET DATE & TIME AS REQUIRED) DATE (e.g., MON 16 NOV 1987)			
TIME (e.g., 11:25:43 AM)			
DAYLIGHT SAVINGS	ON ■ OFF ☐		

EXPANDED PROGRAMMING HISTORY (Function Mode, Optional)

	Initial Programmed Value Date: 5-16-95	Program Change Date:	Program Change Date:
■ press FUNCTION key			
SWITCH TO MS (enter EZ value) T1:	10 sec.	sec.	sec.
T2:	10 sec.	sec.	sec.
TRANSFER DELAY MS TO GCP (O=OFF) T1:	0 ft.	ft.	ft.
T2:	0 ft.	ft.	ft.
PRIME PREDICTION OFFSET (O=OFF) T1:	0 ft.	ft.	ft.
T2:	005 ft.	ft.	ft.
PICKUP DELAY PRIME	15 sec.	sec.	sec.
PICKUP DELAY DAX A	15 sec.	sec.	sec.
PICKUP DELAY DAX B	15 sec.	sec.	sec.
PICKUP DELAY DAX C	N/A sec.	sec.	sec.
PICKUP DELAY DAX D	N/A sec.	sec.	sec.
COMPENSATION VALUE T1:	1000 sec.	sec.	sec.
COMPENSATION VALUE T2:	1000 sec.	sec.	sec.

CALIBRATION HISTORY

		FULL TRACK (NO HARDWIRE SHUNT)	FULL TRACK (HARDWIRE SHUNT AT TERMINATION)	50 PERCENT TRACK (HARDWIRE SHUNT) NO LINEARIZATION	LINEARIZATION STEP +/-	LINEARIZATION EZ
EAST	track 1 EZ/EX	99 / 87	79 / 94	37 / 98	+5	46
WEST	track 1 EZ/EX	/	/	/		
EAST	track 2 EZ/EX	/	/	/		
WEST	track 2 EZ/EX	101 / 87	77 / 93	31 / 106	+12	36

REGION NORTHERN	Illinois Central — COMMUNICATIONS & SIGNALS, ENGINEERING DEPARTMENT
DISTRICT JOLIET	
FILENAME 02508C05	SD 1023 C MP 25.08 TO 25.15
DESIGNER / DATE 4-24-98	LEMONT, IL
SHEET NO. 5 OF 17	STEPHEN ST SBM #2 GCP APPLICATION INFO

5 4 3 2 1-13-98 1 REVISIONS

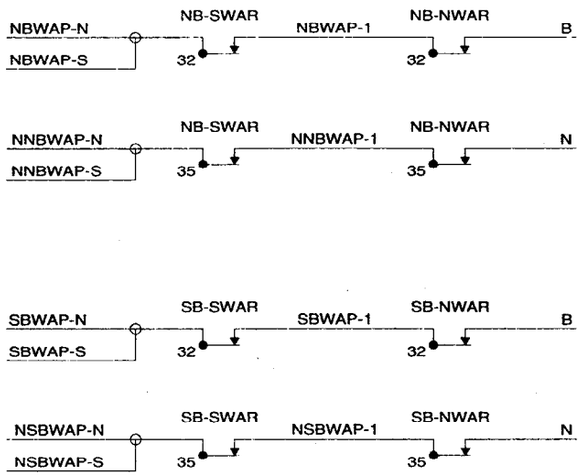

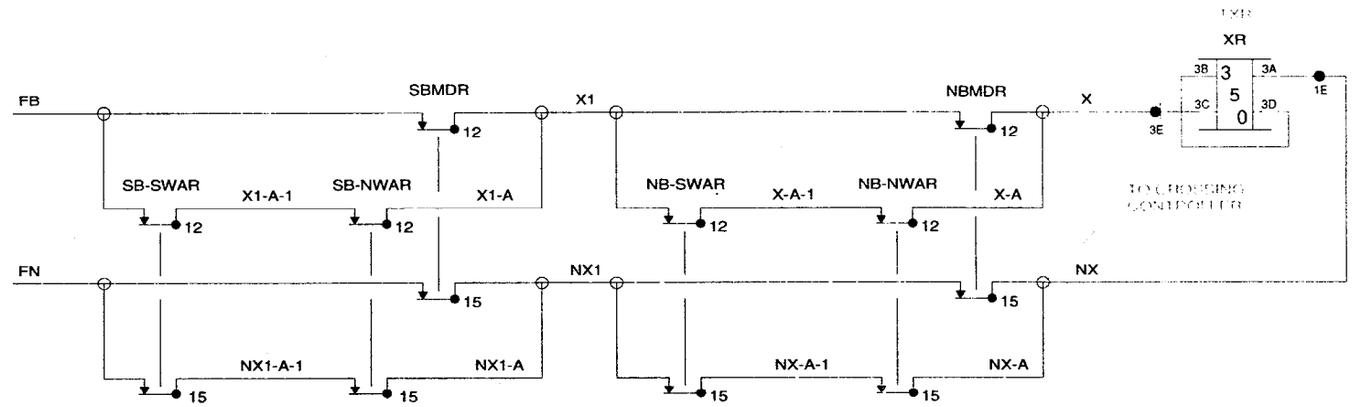

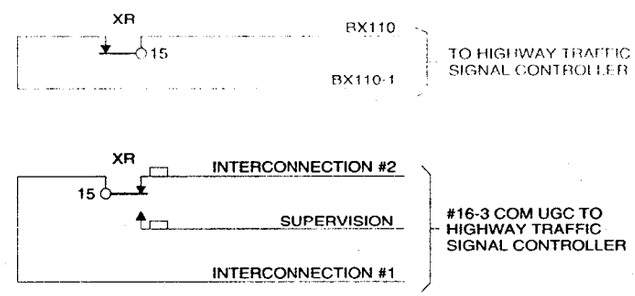

REGION NORTHERN	Illinois Central	COMMUNICATIONS & SIGNALS, ENGINEERING DEPARTMENT
DISTRICT JOLIET		
FILENAME 02508C06	SD 1023 C MP 25.08 TO 25.15	
DESIGNER / DATE 4-24-98	LEMONT, IL	
SHEET NO. 6 OF 17	STEPHEN ST LINE CIRCUITS & XR	

5 4 3 2 1-13-98 1 REVISIONS

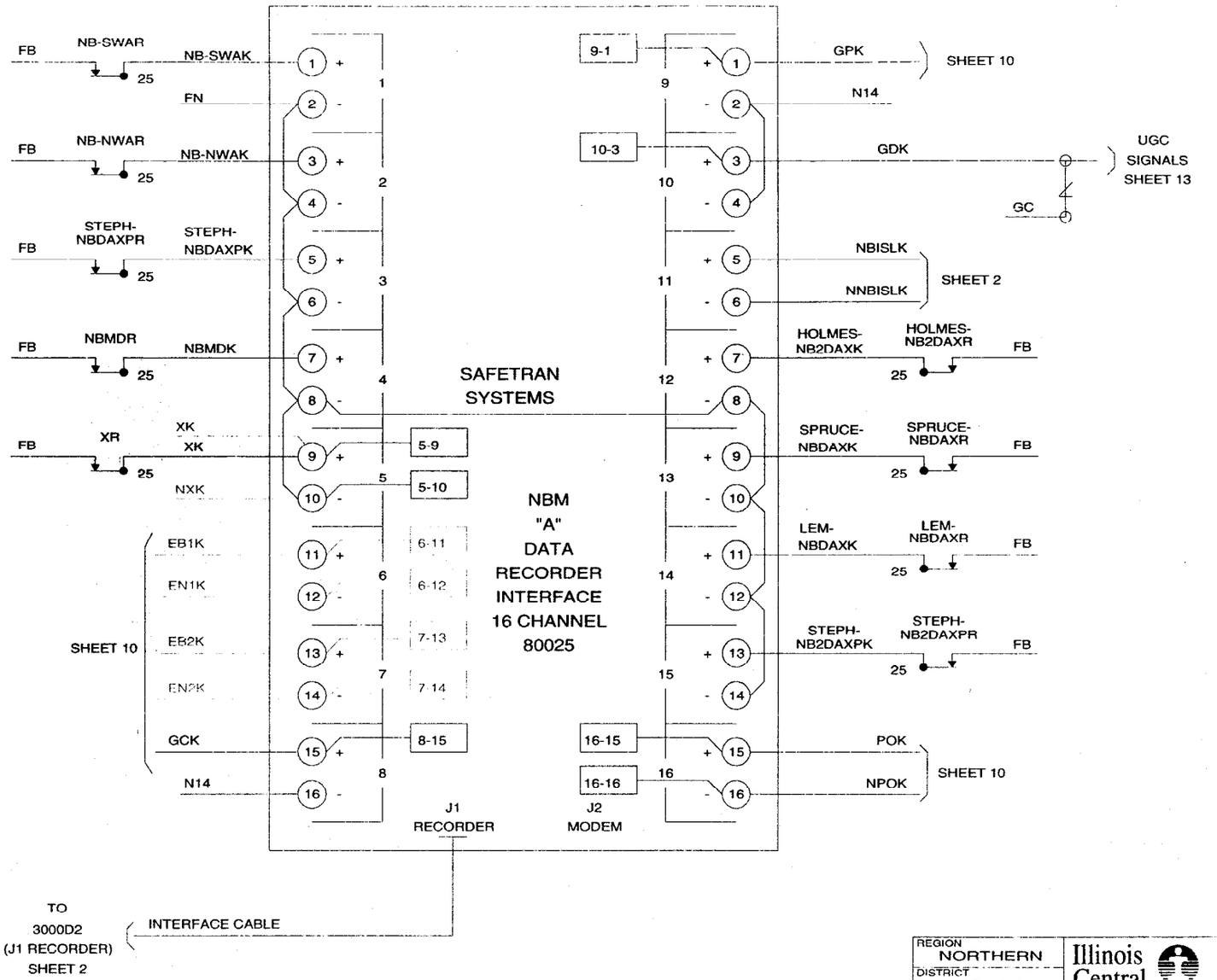

= JUMPER TO INTERFACE "B" SHEET 8

REGION NORTHERN	Illinois Central — COMMUNICATIONS & SIGNALS, ENGINEERING DEPARTMENT
DISTRICT JOLIET	
FILENAME 02508C07	SD 1023 C MP 25.08 TO 25.15
DESIGNER / DATE 4-24-98	LEMONT, IL
SHEET NO. 7 OF 17	STEPHEN ST NBM DATA RECORDER "A"

5	4	3	2	1-13-98	1	REVISIONS

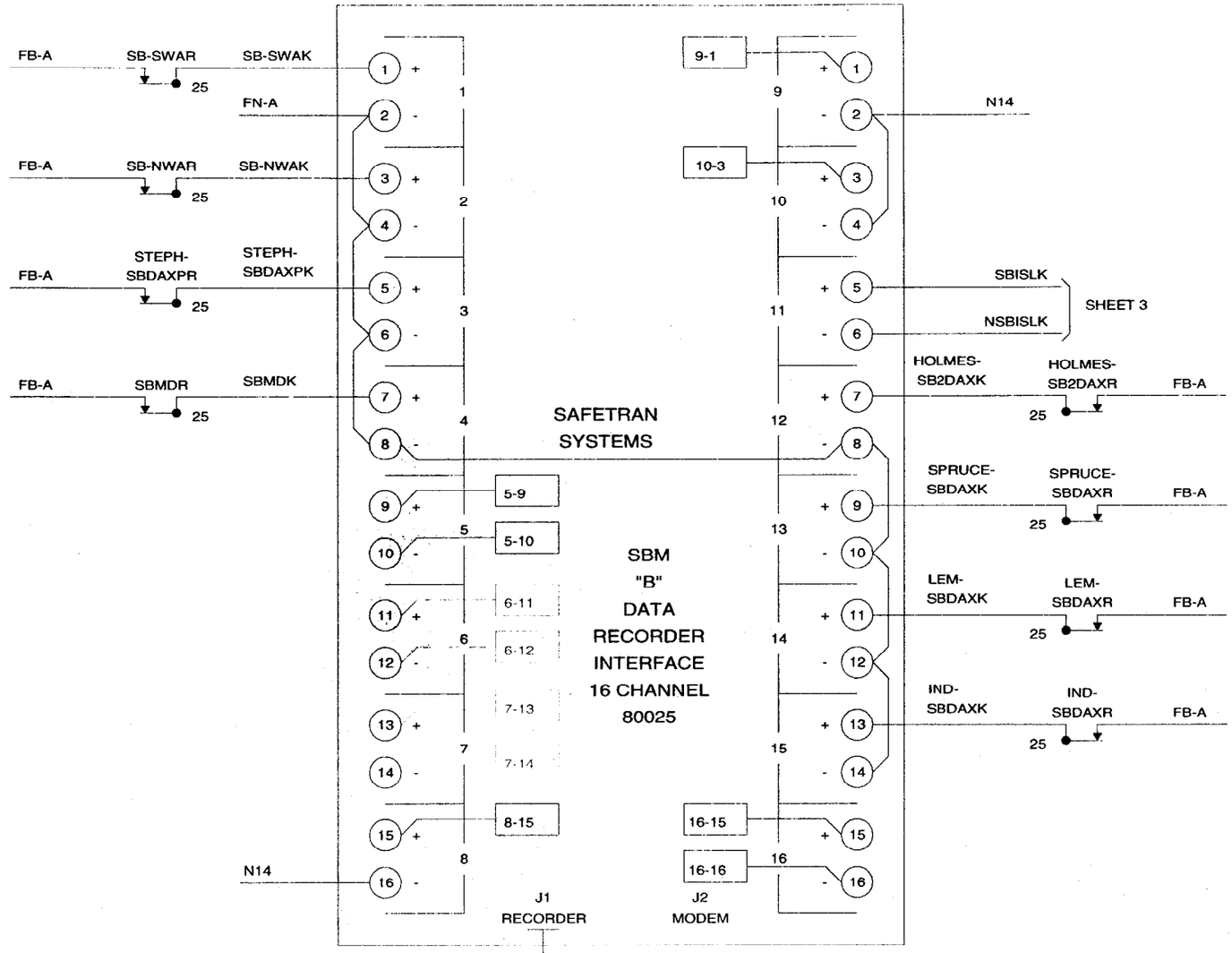

TO 3000D2 (J1 RECORDER) SHEET 3 — INTERFACE CABLE

= JUMPER TO INTERFACE "A" SHEET 7

REGION NORTHERN	Illinois Central — COMMUNICATIONS & SIGNALS, ENGINEERING DEPARTMENT
DISTRICT JOLIET	
FILENAME 02508C08	SD 1023 C MP 25.08 TO 25.15
DESIGNER / DATE 4-24-98	LEMONT, IL
SHEET NO. 8 OF 17	STEPHEN ST SBM DATA RECORDER "B"

5 4 3 2 1-13-98 1 REVISIONS

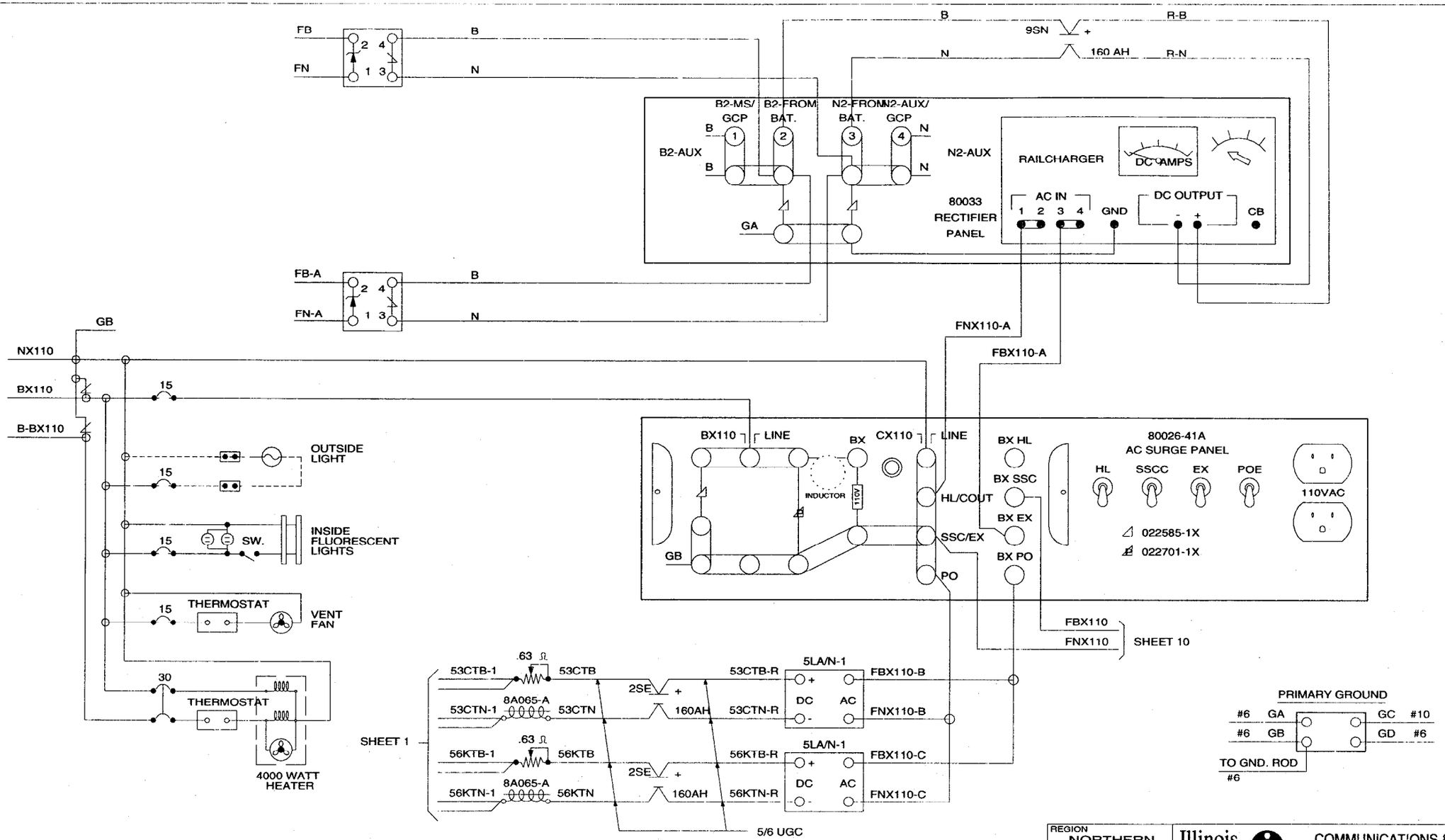

REGION NORTHERN	Illinois Central — COMMUNICATIONS & SIGNALS, ENGINEERING DEPARTMENT
DISTRICT JOLIET	
FILENAME 02508C09	SD 1023 C MP 25.08 TO 25.15
DESIGNER / DATE 4-24-98	LEMONT, IL
SHEET NO. 9 OF 17	STEPHEN ST POWER

5 4 3 2 1-13-98 1 REVISIONS

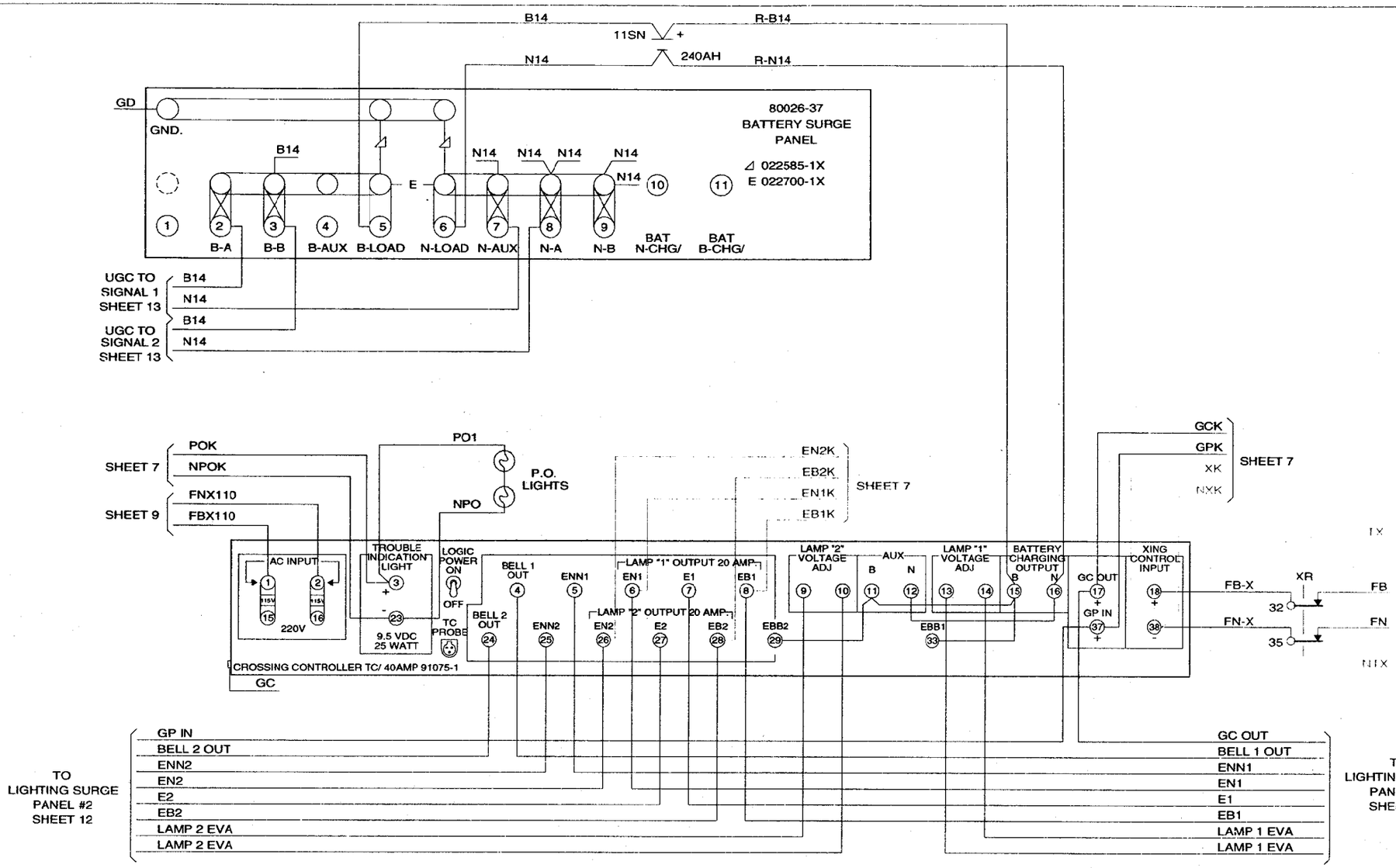

REGION NORTHERN	Illinois Central — COMMUNICATIONS & SIGNALS, ENGINEERING DEPARTMENT
DISTRICT JOLIET	
FILENAME 02508C10	SD 1023 C MP 25.08 TO 25.15
DESIGNER / DATE 4-24-98	LEMONT, IL
SHEET NO. 10 OF 17	STEPHEN ST S.S.C.C & BAT. SURGE PANEL

5 4 3 2 1-13-98 1 REVISIONS

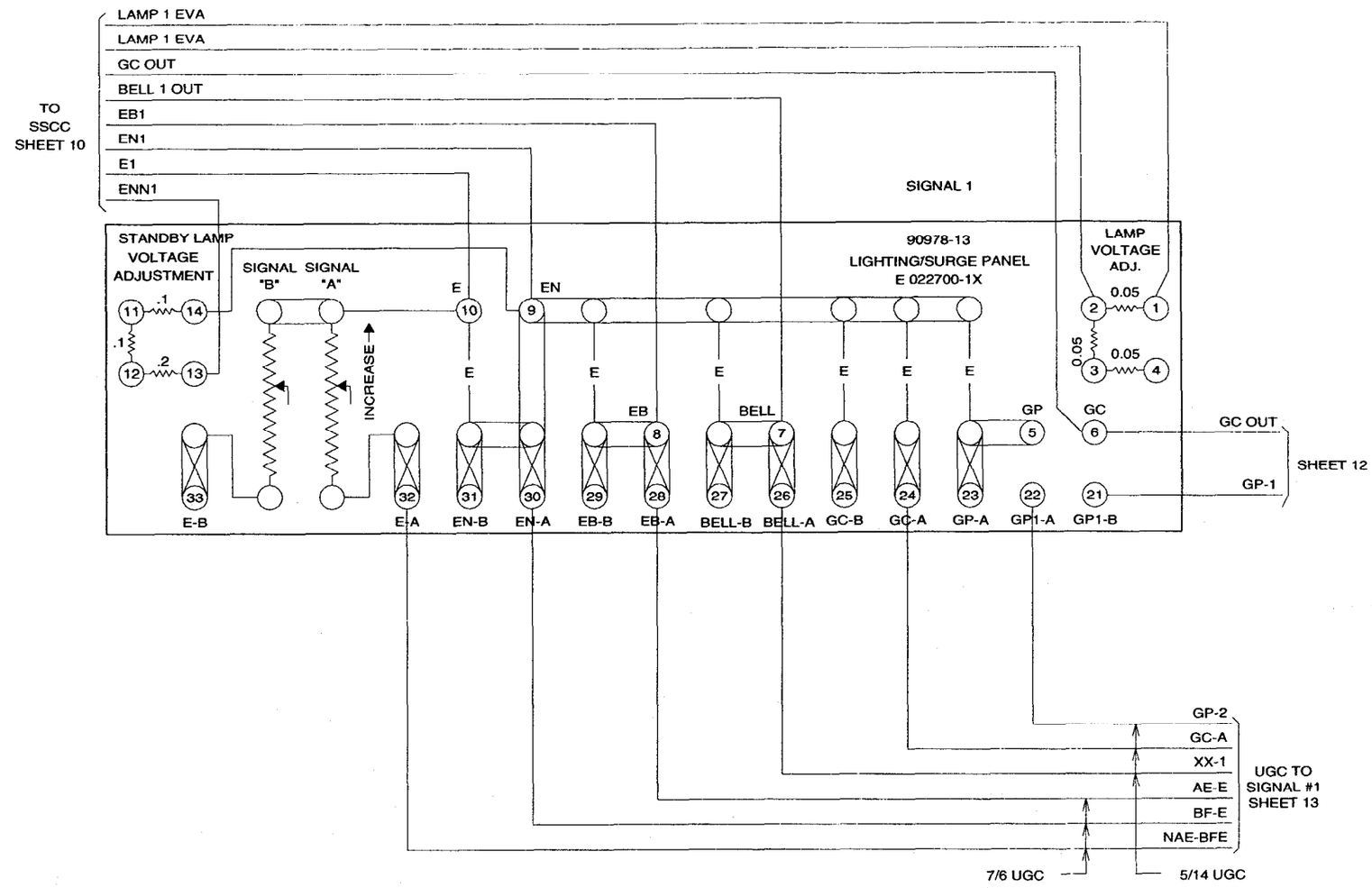

REGION NORTHERN	Illinois Central — COMMUNICATIONS & SIGNALS, ENGINEERING DEPARTMENT
DISTRICT JOLIET	SD 1023 C MP 25.08 TO 25.15
FILENAME 02508C11	LEMONT, IL
DESIGNER / DATE 4-24-98	STEPHEN ST
SHEET NO. 11 OF 17	LIGHTING/SURGE PANEL #1

5 4 3 2 1-13-98 1 REVISIONS

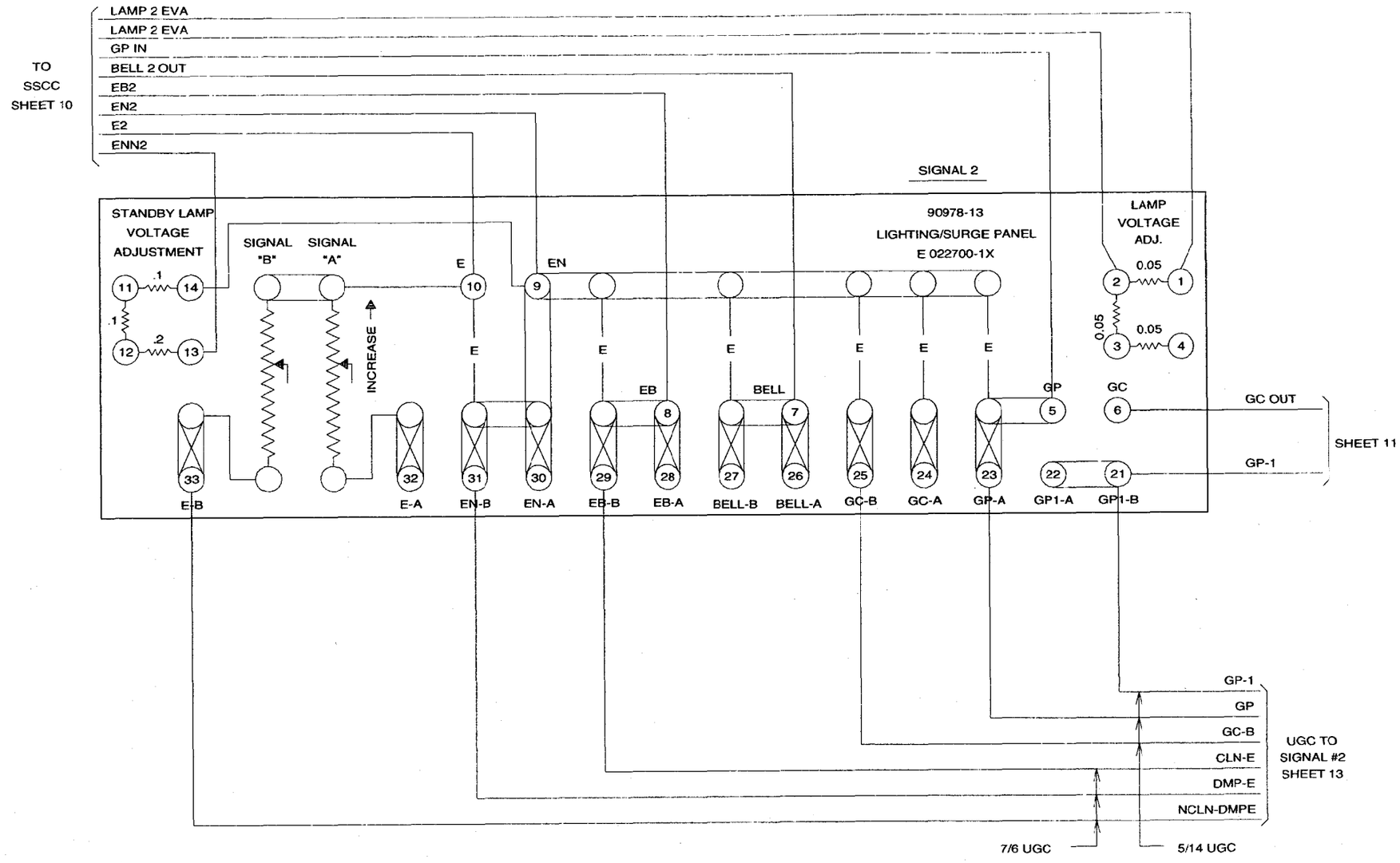

REGION NORTHERN	Illinois Central	COMMUNICATIONS & SIGNALS, ENGINEERING DEPARTMENT
DISTRICT JOLIET		
FILENAME 02508C12	SD 1023 C MP 25.08 TO 25.15	
DESIGNER / DATE 4-24-98	LEMONT, IL	
SHEET NO. 12 OF 17	STEPHEN ST LIGHTING/SURGE PANEL #2	

5 4 3 2 1-13-98 1 REVISIONS

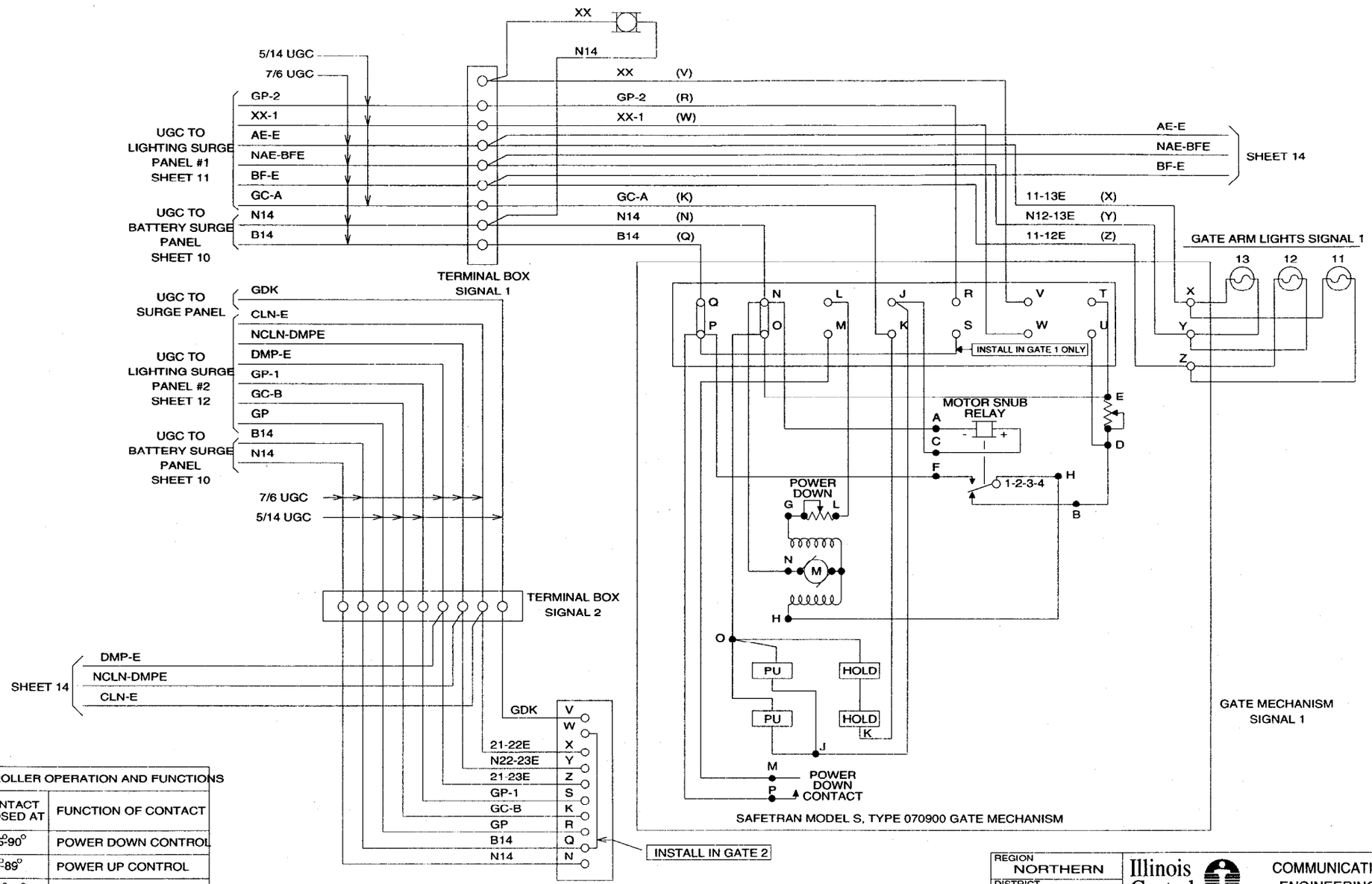

CIRCUIT CONTROLLER OPERATION AND FUNCTIONS		
CONTACT SPACE	CONTACT CLOSED AT	FUNCTION OF CONTACT
L-M	45°-90°	POWER DOWN CONTROL
J-K	0°-89°	POWER UP CONTROL
R-S	83°-90°	GPXR CONTROL
V-W	5°-90°	BELL/GDK
T-U	0°-5°	MOTOR SNUB CONTROL

REGION NORTHERN	Illinois Central — COMMUNICATIONS & SIGNALS, ENGINEERING DEPARTMENT
DISTRICT JOLIET	SD 1023 C MP 25.08 TO 25.15
FILENAME 02508C13	LEMONT, IL
DESIGNER / DATE 4-24-98	STEPHEN ST GATE MECHANISM
SHEET NO. 13 OF 17	

5 4 3 2 1-13-98 1 REVISIONS

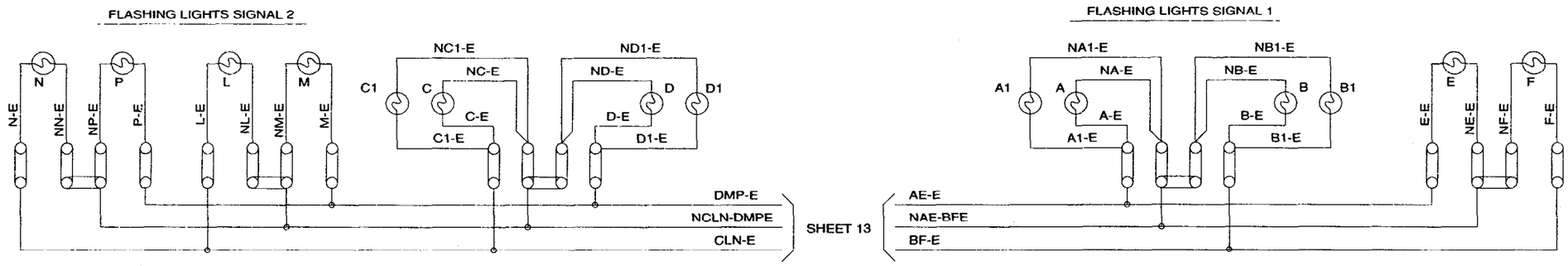

REGION NORTHERN	Illinois Central	COMMUNICATIONS & SIGNALS, ENGINEERING DEPARTMENT
DISTRICT JOLIET		
FILENAME 02508C14	SD 1023 C MP 25.08 TO 25.15	
DESIGNER / DATE 4-24-98	LEMONT, IL	
SHEET NO. 14 OF 17	STEPHEN ST FLASHING LIGHTS	

5 4 3 2 1-13-98 1 REVISIONS

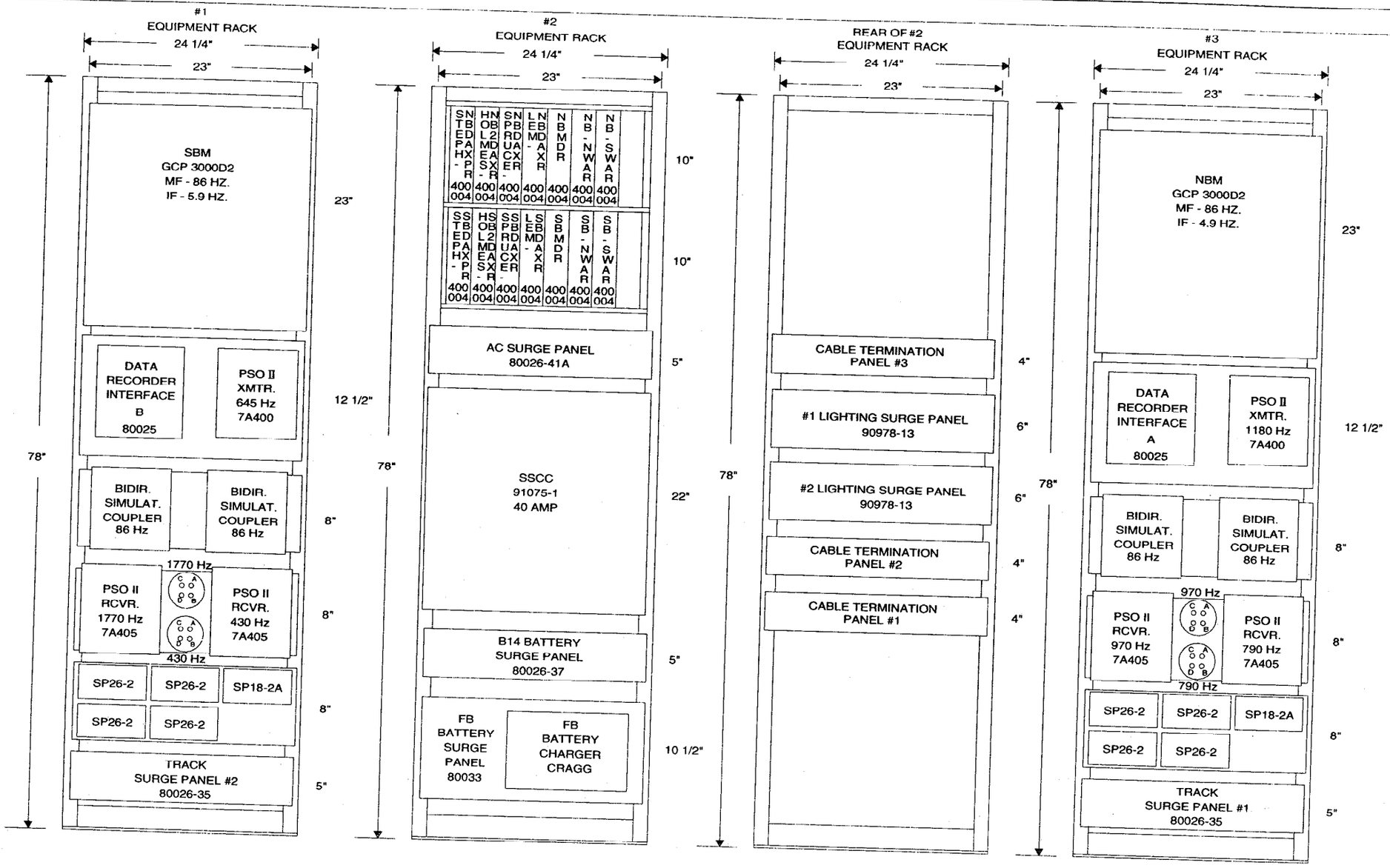

PLEASE SHOW LOCATION OF NEW RELAYS

XR
STEPH-NB2DAXPR
IND-SBDAXPR

REGION NORTHERN	Illinois Central — COMMUNICATIONS & SIGNALS, ENGINEERING DEPARTMENT
DISTRICT JOLIET	SD 1023 C MP 25.08 TO 25.15
FILENAME 02508C15	LEMONT, IL
DESIGNER / DATE 4-24-98	STEPHEN ST RACK LAYOUTS
SHEET NO. 15 OF 17	

5 4 3 2 1-13-98 1 REVISIONS

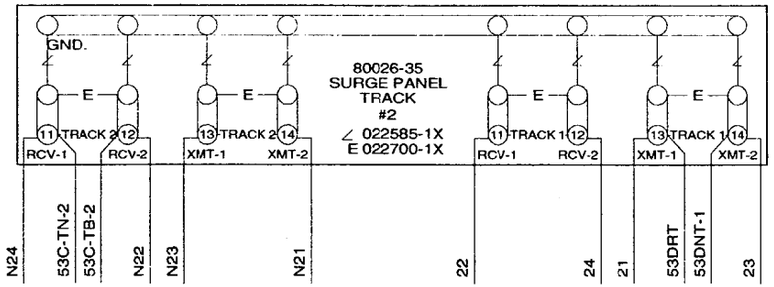

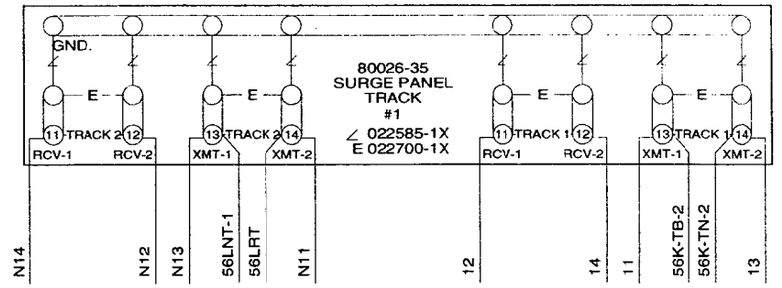

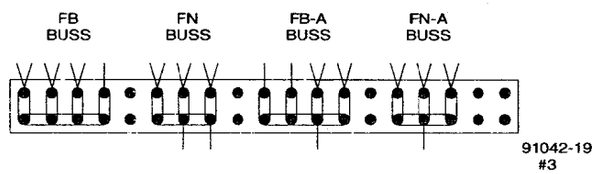

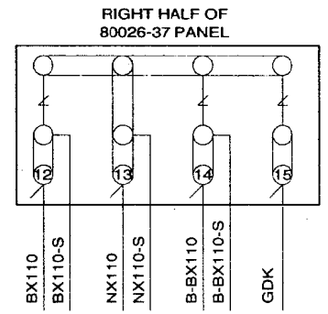

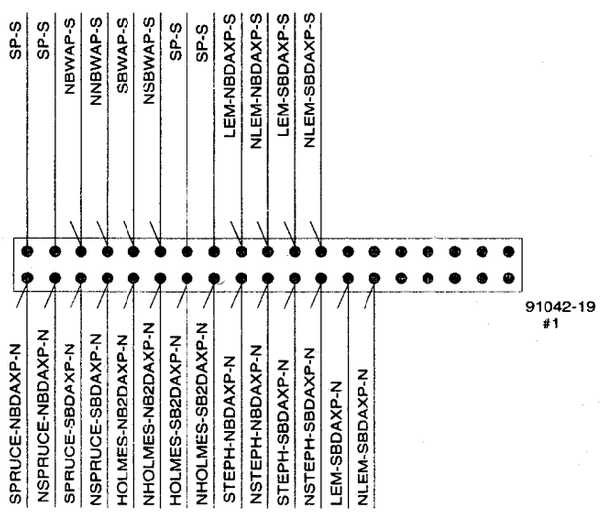

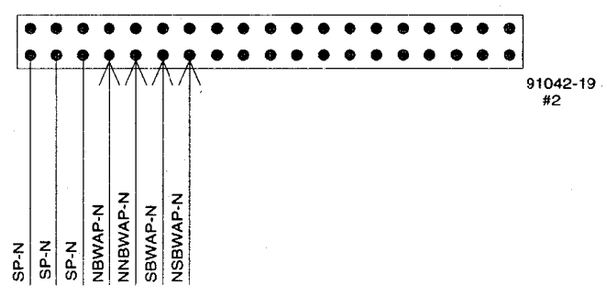

NOTE: CABLE TERMINATION PANELS LOCATED
ON REAR OF EQUIPMENT RACK NO. 2.

REGION NORTHERN	Illinois Central	COMMUNICATIONS & SIGNALS, ENGINEERING DEPARTMENT
DISTRICT JOLIET		
FILENAME 02508C16	SD 1023 C MP 25.08 TO 25.15	
DESIGNER / DATE 4-24-98	LEMONT, IL	
SHEET NO. 16 OF 17	STEPHEN ST SURGE PANELS	

5 4 3 2 1-13-98 1 REVISIONS

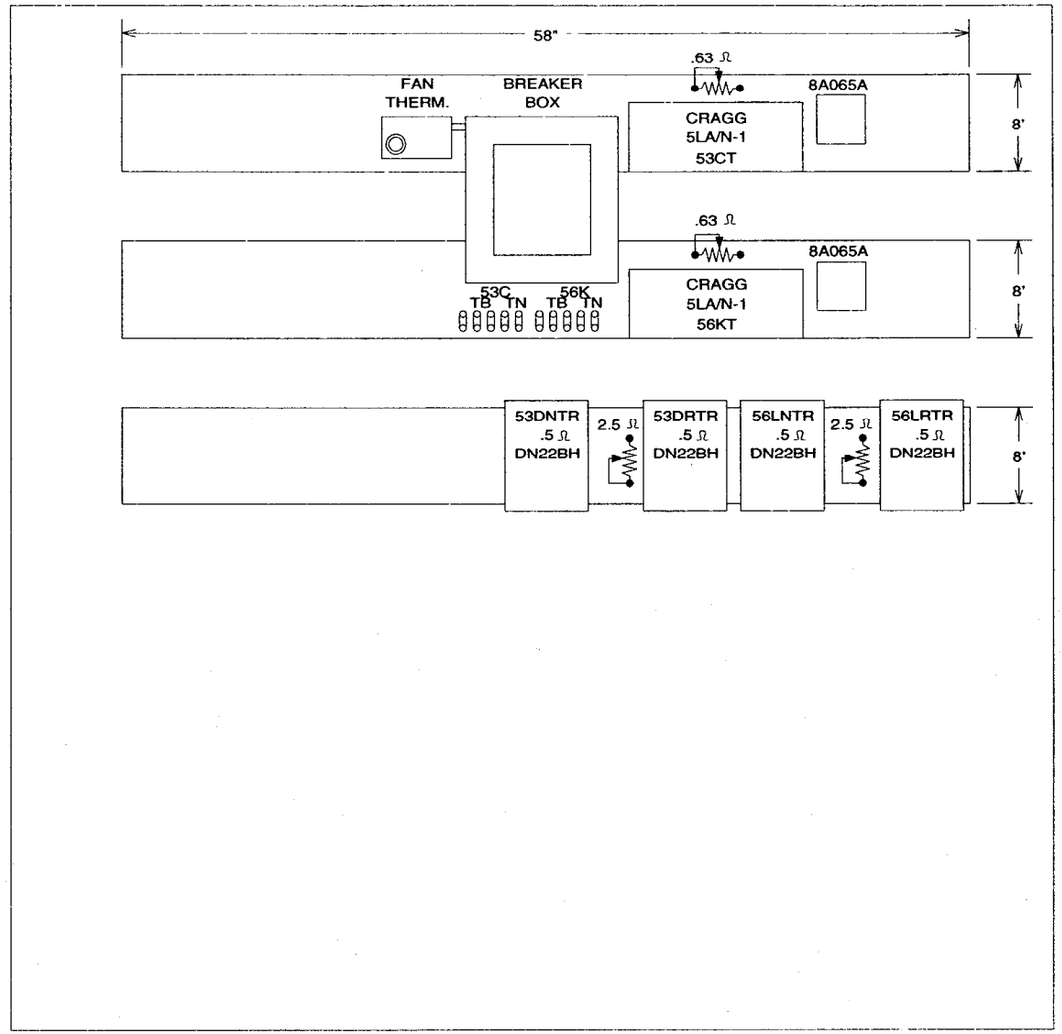

6'x8'
RIGHT SIDE

REGION NORTHERN	Illinois Central — COMMUNICATIONS & SIGNALS, ENGINEERING DEPARTMENT
DISTRICT JOLIET	
FILENAME 02508C17	SD 1023 C MP 25.08 TO 25.15
DESIGNER / DATE 4-24-98	LEMONT, IL
SHEET NO. 17 OF 17	STEPHEN ST WALL LAYOUT - RIGHT SIDE

5 4 3 2 1 REVISIONS

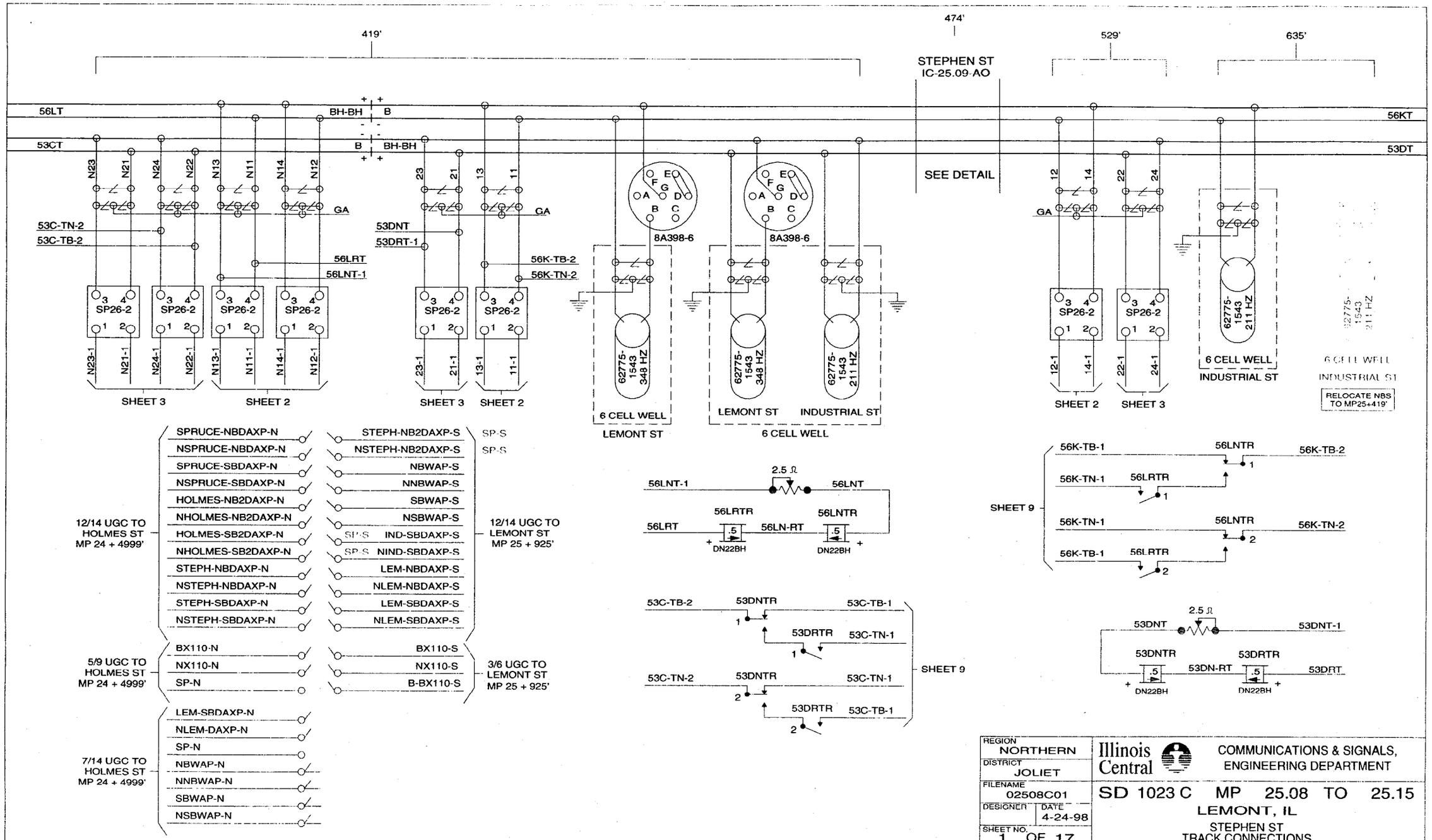
419'
474'
529'
635'
STEPHEN ST
IC-25.09-AO
56LT
53CT
56KT
53DT
BH-BH
B
SEE DETAIL
GA
53C-TN-2
53C-TB-2
56LRT
56LNT-1
53DNT
53DRT-1
56K-TB-2
56K-TN-2
SP26-2
8A398-6
62775-1543 348 HZ
62775-1543 211 HZ
6 CELL WELL
LEMONT ST
INDUSTRIAL ST
SHEET 3
SHEET 2
RELOCATE NBS TO MP25+419'
SPRUCE-NBDAXP-N
NSPRUCE-NBDAXP-N
SPRUCE-SBDAXP-N
NSPRUCE-SBDAXP-N
HOLMES-NB2DAXP-N
NHOLMES-NB2DAXP-N
HOLMES-SB2DAXP-N
NHOLMES-SB2DAXP-N
STEPH-NBDAXP-N
NSTEPH-NBDAXP-N
STEPH-SBDAXP-N
NSTEPH-SBDAXP-N
12/14 UGC TO HOLMES ST MP 24 + 4999'
STEPH-NB2DAXP-S
NSTEPH-NB2DAXP-S
NBWAP-S
NNBWAP-S
SBWAP-S
NSBWAP-S
IND-SBDAXP-S
NIND-SBDAXP-S
LEM-NBDAXP-S
NLEM-NBDAXP-S
LEM-SBDAXP-S
NLEM-SBDAXP-S
12/14 UGC TO LEMONT ST MP 25 + 925'
BX110-N
NX110-N
SP-N
5/9 UGC TO HOLMES ST MP 24 + 4999'
BX110-S
NX110-S
B-BX110-S
3/6 UGC TO LEMONT ST MP 25 + 925'
LEM-SBDAXP-N
NLEM-DAXP-N
SP-N
NBWAP-N
NNBWAP-N
SBWAP-N
NSBWAP-N
7/14 UGC TO HOLMES ST MP 24 + 4999'
2.5 Ω
56LNT-1
56LNT
56LRTR
56LNTR
56LRT
56LN-RT
DN22BH
53C-TB-2
53DNTR
53C-TB-1
53DRTR
53C-TN-1
53C-TN-2
SHEET 9
56K-TB-1
56K-TN-1
56K-TN-2
53DNT
53DNT-1
53DN-RT
53DRT
REGION NORTHERN
DISTRICT JOLIET
FILENAME 02508C01
DESIGNER
DATE 4-24-98
SHEET NO. 1 OF 17
Illinois Central
COMMUNICATIONS & SIGNALS, ENGINEERING DEPARTMENT
SD 1023 C MP 25.08 TO 25.15
LEMONT, IL
STEPHEN ST
TRACK CONNECTIONS
1-13-98
REVISIONS