ILLINOIS COMMERCE COMMISSION

DOCKET NO. 02-0480

RESPONSE OF CONSUMERS ILLINOIS WATER COMPANY

TO ICC DATA REQUEST NO. WD 1.17

Witness Responsible:	Thomas J. Bunosky
Company:	Consumers Illinois Water Company
Job Title:	Vice President
Phone Number:	815-935-8800 Ext. 530

WD 1.17 Provide workpapers, memorandums, and/or studies utilized by Mr. Bunosky in his Draft Testimony in conducting the cost analysis of the different approaches in addressing the iron and arsenic violations at Grant Park.

RESPONSE: Please refer to workpapers WD 1.17, Table 7 and Table 8. A review of available technology indicated that, in order to meet iron and arsenic limits in the Grant Park well water supply, iron precipitation and filtration would be the best process. Arsenic would also be removed concomitantly in the iron removal process, as explained in the literature. In addition, the Company studied water treatment processes to remove hardness and radon from the water supply in the Village of Grant Park. Softened water, as would be provided by the pipeline alternative, is desirable from an aesthetic standpoint, although not a requirement from a regulatory standpoint. For hardness removal, a membrane treatment process, nanofiltration, also known as low-pressure reverse osmosis, was the selected process in this study for its ease of operation. Radon treatment was also studied since tests of the Grant Park water supply indicate levels approaching 300 pCi/L (pico-curies per liter), which is a proposed EPA primary drinking water standard. The EPA maximum contaminant level goal for this parameter is zero.

WD 1.17 - 1

1000 S. Schuyler
Kankakee, IL 60901
Phone: 815-935-6535 Ext. 517
FAX: 815-935-8809

Consumers Illinois Water Company

Fax

To:	Chuck Hansen, PE	**From:**	Dan Oliver
Fax:	847-844-4409	**Pages:**	4 including cover sheet
Phone:		**Date:**	10/17/01
Re:	Grant Park Water Treatment	**CC:**	

☐ **Urgent** X **For Review** ☐ **Please Comment** ☐ **Please Reply** ☐ **Please Recycle**

Chuck,

Would you please have US Filter make a recommendation on the water treatment process train for Grant Park 's water supply? We have been asked by Grant Park to give them a proposal to take over their system and hence our request.

I have attached some water quality information from the CCR. Water quality concerns are hardness, iron, and arsenic. We would like to consider a plant to treat for all of these constituents. More recent iron levels in the wells were 1.6 mg/l and 1.8 mg/l, and arsenic levels were 13.0 ppb and 9 ppb. We would like to see the arsenic in the treated water less than 5 ppb. Hardness levels less than 180 mg/l would be acceptable to us.

The plant should be sized at 400 gpm to allow for growth. We would like to keep the process as automated as possible and we would like to know if a membrane process somewhere in the train would be practical, based on ease of operation. Budget cost estimates would be appreciated.

Please review this as soon as possible as we would like to get back to the Grant Park officials soon.

Thank you,

Dan Oliver

WD 1.17-2

USFilter

FAX

MEMCOR, MICROFLOC,
GENERAL FILTER PRODUCTS
800 ARRASMITH TRAIL
AMES, IA 50010

TELEPHONE 515-232-4121
FACSIMILE 515-232-2571

TO:	Chuck Hansen	CC:	John Berrigan
FAX:	Auto	TELEPHONE:	
FROM:	Ben Hoesing	DATE:	October 29, 2001
SUBJECT:	Grant Park, IL	PAGES:	1 of 9

Chuck,

The following includes the budget pricing you requested for Grant Park, IL. We came up with some different options for treating the water for the arsenic, iron and hardness. Our first option includes a 13'-0" diameter Type II Waterwash AERALATER to treat the 400 gpm flow rate. The price for this unit comes to $99,000. This price includes the filter section, media, detention tank, aerator, face piping, shipping and startup. The budget price add to automate the AERALATER is $24,000. This price includes automatic controls, pneumatic valve actuators and an air compressor.

The second option consists of an Atomerator along with Vertical Pressure Filters. The Atomerator, sized for 400 gpm, carries a price of $8,000. We sized three (3) 8'-0" diameter x 60" SSH VPF's for the given flow rate. These units have a budget price of $78,000. This price includes the three pressure vessels, media, manually operated butterfly valves, face piping, shipping and startup. The budget price add to automate the VPF's is $18,000. This price includes the same equipment mentioned with the AERALATER.

Our third option is a Granular Ferric Hydroxide, or GFH system for Arsenic removal. This system incorporates three (3) 6'-0" diameter x 6'-0" SSH tanks containing the GFH media. The price for this system comes to $140,000. This price includes the three pressure vessels, media, manually operated butterfly valves, face piping, shipping and startup. One thing to note, Iron and Manganese removal prior to the GFH system will be required. Otherwise the media will foul. As a result, one of the first two options will be required for pretreatment. Included is some information on the Arsenic removal process. As you will note in the Direct Filtration for Arsenic Removal: successful removal of iron will most likely result in adequate removal of Arsenic.

For softening, we recommend three (3) 60" diameter x 96" SSH Ion Exchange Softeners. These units carry a budget price of $93,000. This price includes the three non-code tanks, cation resin, automatic regeneration controls, brine pump and meter, face piping, shipping and startup. The vessels are sized to treat 236 gpm of

VIVENDI water company

■ THIS TRANSMISSION CONTAINS CONFIDENTIAL INFORMATION INTENDED FOR USE ONLY BY THE ABOVE NAMED RECIPIENT. READING, DISCUSSION, DISTRIBUTION, OR COPYING OF THIS MESSAGE IS STRICTLY PROHIBITED BY ANYONE OTHER THAN THE NAMED RECIPIENT OR HIS OR HER EMPLOYEES OR AGENTS. ■ IF YOU HAVE RECEIVED THIS FAX IN ERROR, PLEASE IMMEDIATELY NOTIFY US BY TELEPHONE (COLLECT), AND RETURN THE ORIGINAL MESSAGE TO US AT THE ABOVE ADDRESS VIA U.S. POSTAL SERVICE.

WD 1.17 -3

October 29, 2001

the influent 400 gpm. This will result in a blended hardness of 180 mg/L as $CaCO_3$, based on an influent hardness of 440 mg/L as $CaCO_3$.

If you have any further questions, feel free to give Tom Dumbaugh a call.
Regards,

Ben Hossing
USFilter / WTC – Ames, IA

WD 1.17-4

GENERAL FILTER
AERALATER®-TYPE II
UNITIZED IRON & ODOR REMOVAL PLANT
6'-0" – 13'-0" DIAMETER UNITS

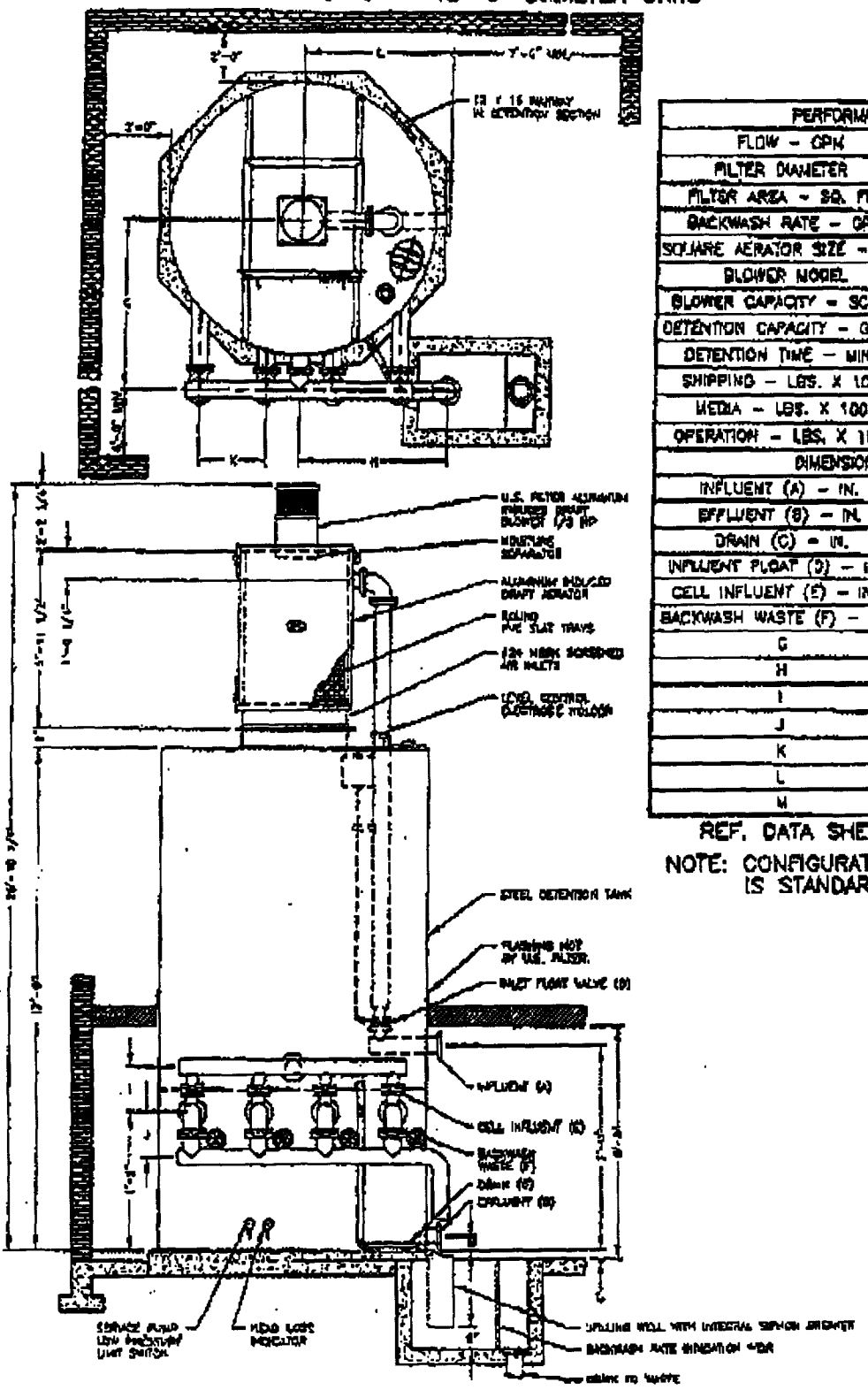

PERFORMANCE	
FLOW – GPM	400
FILTER DIAMETER	13'-0"
FILTER AREA – SQ. FT.	132.7
BACKWASH RATE – GPM	332
SQUARE AERATOR SIZE – FT.	4'-0"
BLOWER MODEL	10-44
BLOWER CAPACITY – SCFM	1200
DETENTION CAPACITY – GAL.	12,000
DETENTION TIME – MIN.	30
SHIPPING – LBS. X 1000	20.6
MEDIA – LBS. X 1000	14.09
OPERATION – LBS. X 1000	174.72
DIMENSIONS	
INFLUENT (A) – IN.	8
EFFLUENT (B) – IN.	8
DRAIN (C) – IN.	3
INFLUENT FLOAT (D) – IN.	6
CELL INFLUENT (E) – IN.	6
BACKWASH WASTE (F) – IN.	8
G	7'-9"
H	6'-9"
I	1'-8¼"
J	1'-3¾"
K	3'-3"
L	7'-0"
M	5"

REF. DATA SHEET D-107.20

NOTE: CONFIGURATION SHOWN IS STANDARD

USFilter
AMES, IOWA

A-15380-7
REV. 6-15-00
REPLACES A-28340

WD 1.17-5

ATOMERATOR
(PRESSURE AERATION)

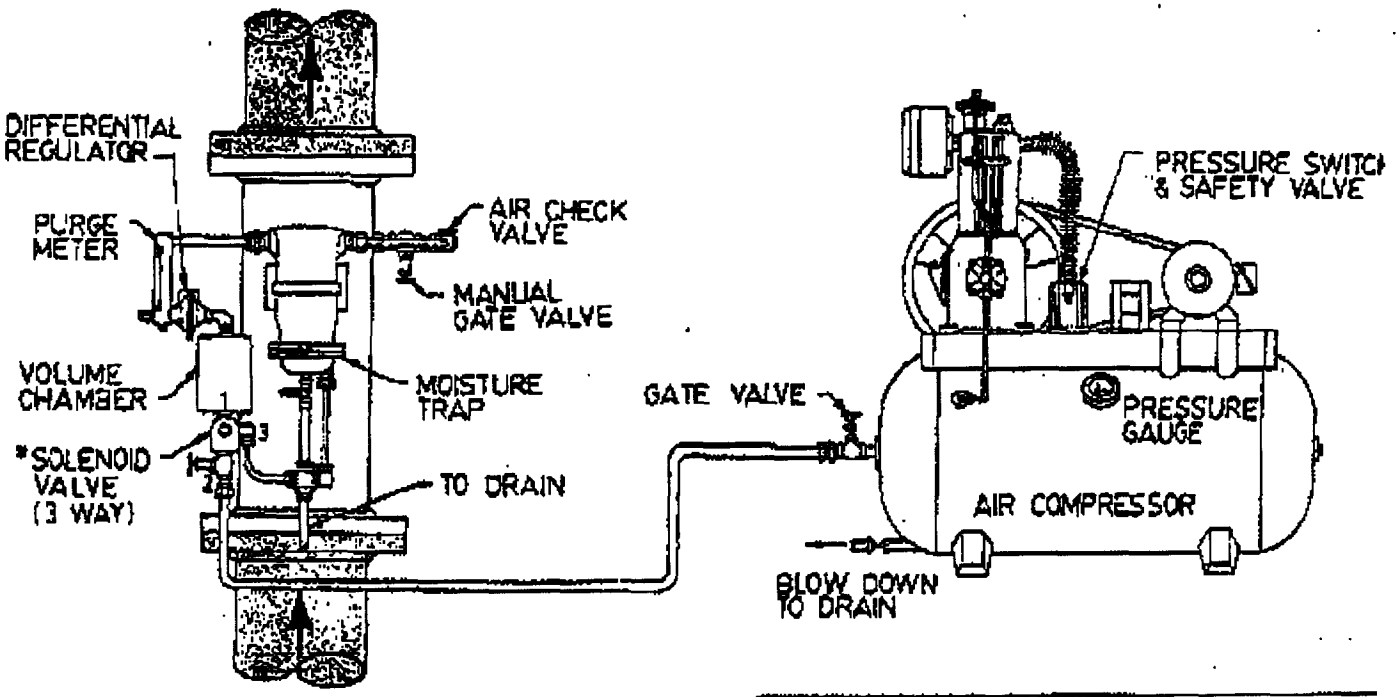

*SOLENOID OPERATION
SERVICE: 2 TO 1 OPEN, 3 CLOSED (VALVE ENERGIZED)
SHUT DOWN: 1 TO 3 OPEN, 2 CLOSED (VALVE DE-ENERGIZED)

DIAMETER	LENGTH	FLOW (GPM)	COMPRESSOR
8"	24"	400	½ H.P.

PRESSURE AERATION ASSEMBLY AND CONTROL OF AIR SUPPLY

THIS DRAWING SHOWS MEANS OF INTRODUCING COMPRESSED AIR INTO PRESSURE AERATOR, KNOWN AS THE ATOMERATOR. IF TOO MUCH AIR IS INTRODUCED, SOME OF THE EXCESS AIR GOES INTO SOLUTION, AND WHEN WATER IS DRAWN FROM A TAP, IT MOMENTARILY APPEARS WHITE. THIS IS CALLED "WHITE WATER".

IN ORDER TO AVOID EXCESSIVE USE OF AIR, THE ATOMERATOR IS EQUIPPED WITH AN AIR FLOW CONTROL VALVE, DIFFERENTIAL REGULATOR, AIR RATE OF FLOW METER.

THE CONTROL VALVE IS ADJUSTED UNTIL SUFFICIENT AIR IS INTRODUCED FOR OXIDATION OF IRON ONLY. THIS CAN BE DONE WITHOUT OBTAINING "WHITE WATER". THE READING ON THE AIR RATE OF FLOW METER IS RECORDED, AND THIS READING IS MAINTAINED WHENEVER PUMPING. ONCE THE CONTROL VALVE IS PROPERLY ADJUSTED, IT IS NOT DISTURBED

PATENTED

U.S. FILTER

GF GENERAL FILTER PRODUCTS AMES, IOWA

A-1071-6

WD 1.17-6

GENERAL FILTER
THREE UNIT VERTICAL FILTER BATTERY
STANDARD FLANGED PIPING

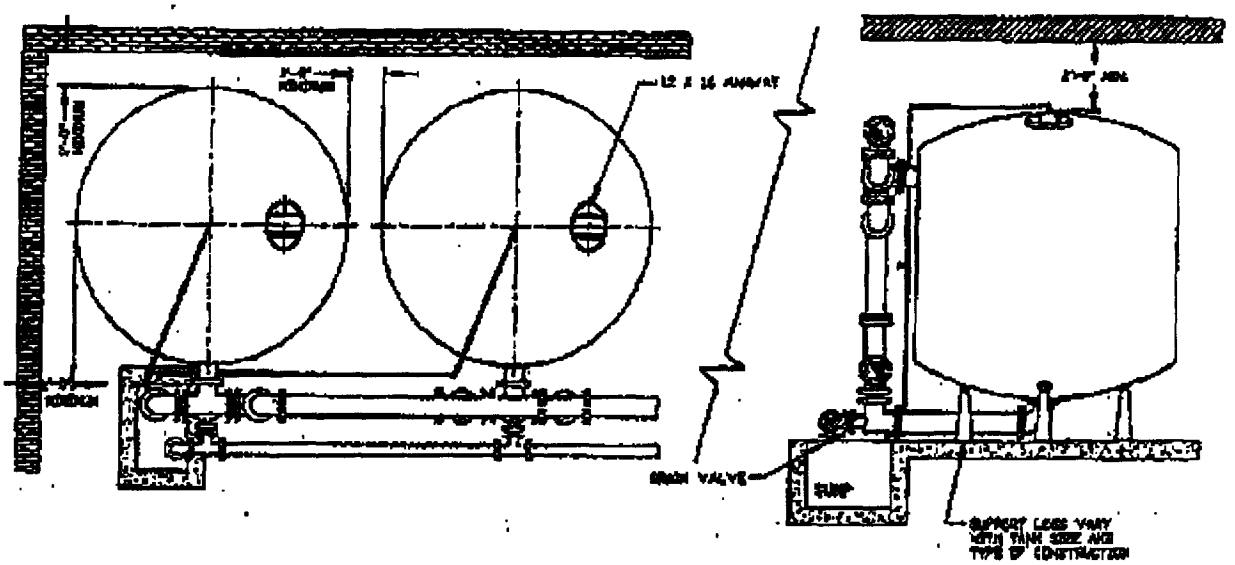

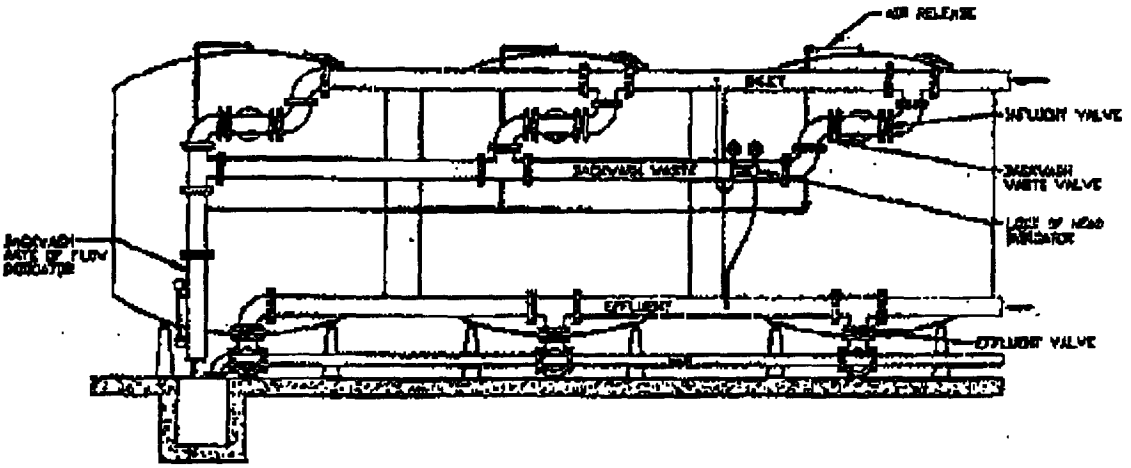

NOTE: ON JOBS WHERE PRESSURE AERATION OCCURS BEFORE FILTRATION THE INLET SHOULD BE BELOW THE BACKWASH WASTE PIPING OR THERE NEEDS TO BE A PROVISION MADE FOR AIR RELEASE IN THE HIGHEST POINT OF THE INLET PIPING.

NOTE: FILTER PIPING SHOWN DASHED IS NOT PROVIDED BY U.S. FILTER UNLESS SPECIFICALLY QUOTED.

NOTE: CONFIGURATION SHOWN IS STANDARD REF. DATA SHEET D-22.00A,B

FILTER DIAMETER	INFLUENT VALVE	EFFLUENT VALVE	BACKWASH WASTE VALVE	DRAIN VALVE
8'-0"	4"	6"	6"	4"

U.S. FILTER

GF
GENERAL FILTER PRODUCTS
AMES, IOWA

A-28412
REV 2-7-95
REPLACES A-1527

WD 1617-7

ION EXCHANGE PRESSURE VESSELS
Three Unit Battery

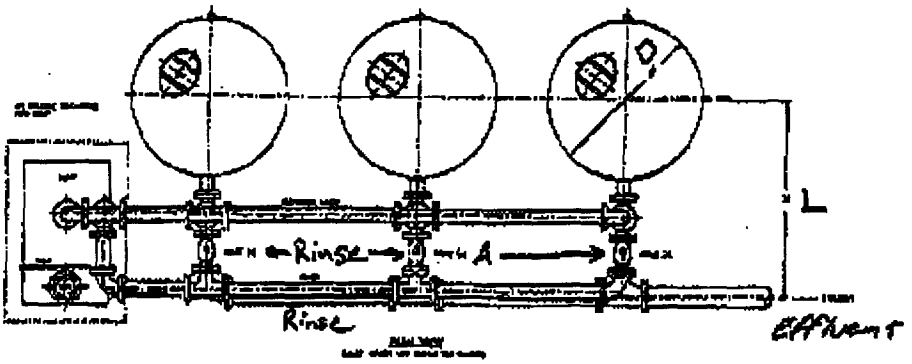

TOTAL FLOW	400	GPM
TREATED FLOW	236	GPM
BYPASS FLOW	164	GPM
(A) SERVICE VALVES	3	INCH
(B) BACKWASH WASTE	2½	INCH
(C) BRINE	1½	INCH
(D) TANK DIAMETER	60	INCH
(E) TANK SSH	96	INCH
(F) HEIGHT	127¾	INCH
(G) BYPASS	2½	INCH
(H)	103¾	INCH
(I)	128	INCH
(J)	88	INCH
(K)	4¾	INCH
(L)	65⅝	INCH

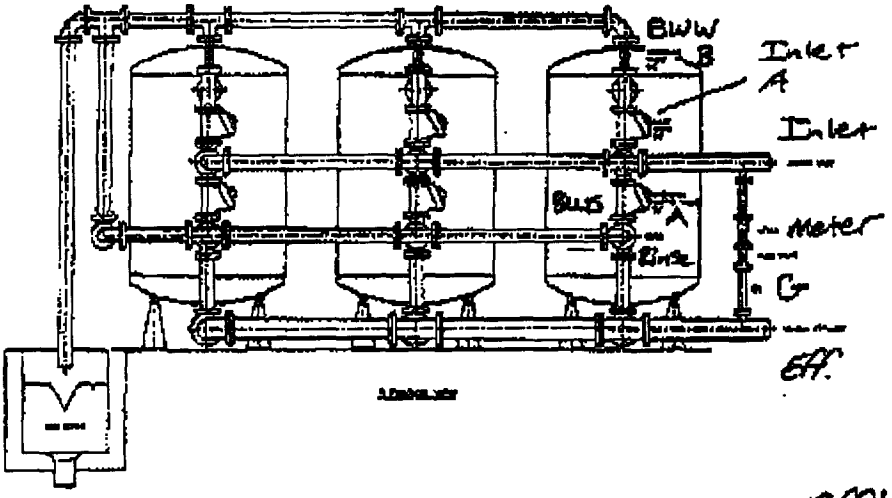

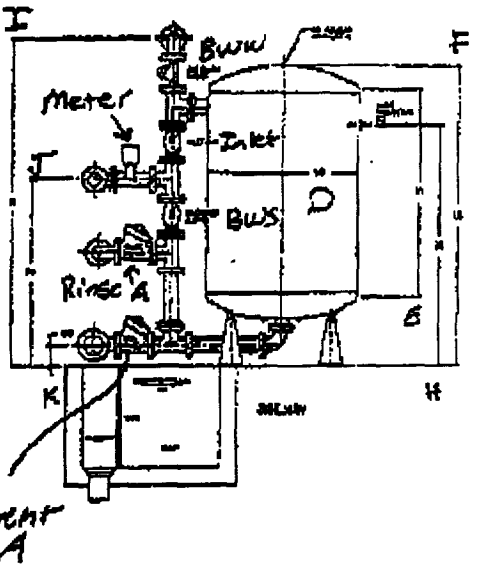

USFilter

AMES, IOWA

WD 1.17-8

USFILTER
THREE UNIT ARSENIC REMOVAL SYSTEM
STANDARD FLANGED PIPING

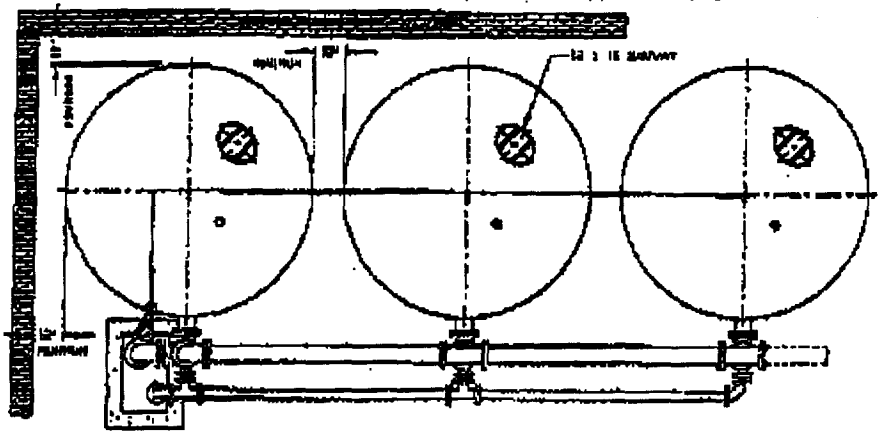

TANK DIAMETER (in.)	72
TANK HEIGHT, H (in.)	114
TANK AREA (sq.ft.)	28.2
TOTAL AREA (sq.ft.)	84.6
FLOW (gpm)	400
BW FLOW (gpm)	339
BW VOLUME (gal)	1430
VALVES & HEADERS (in.)	6
BED VOLUME/TANK (cu.ft.)	9.5
BED VOLUME/TOTAL (cu.ft.)	28.5
MEDIA CONNECTION (in.)	3

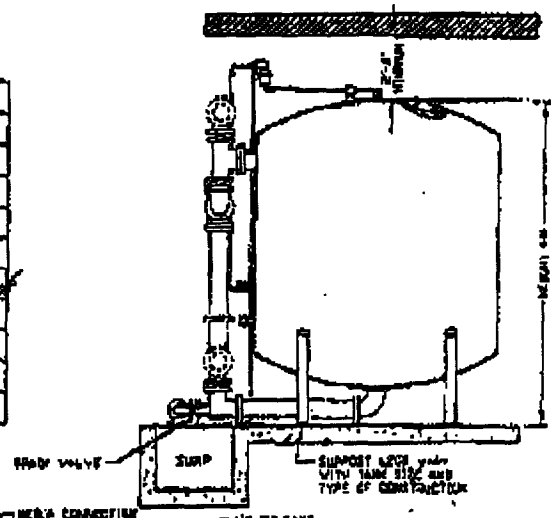

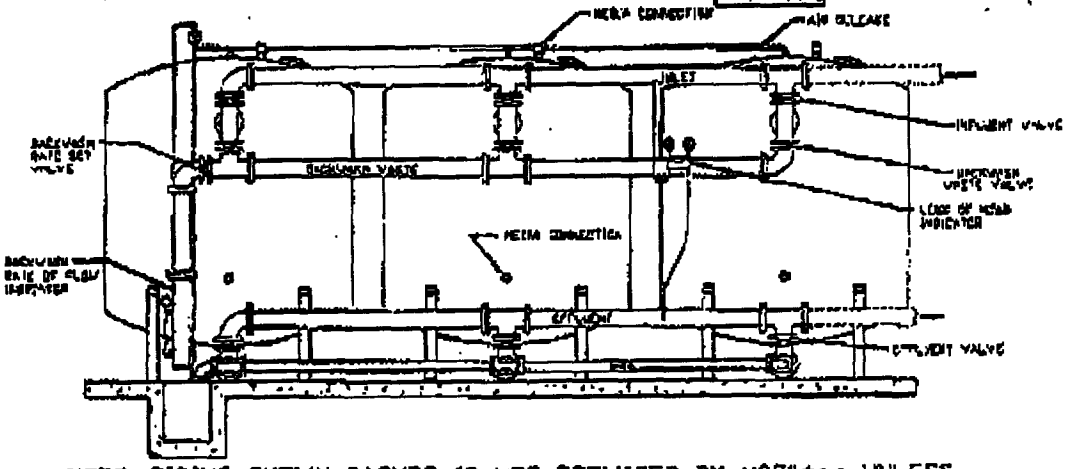

NOTE: PIPING SHOWN DASHED IS NOT PROVIDED BY USFilter UNLESS SPECIFICALLY QUOTED.

NOTE: CONFIGURATION SHOWN IS STANDARD

USFilter
AMES, IOWA

A-28450
NEW 04/01

WD 1.17-9

USFilter

Direct Filtration Arsenic Removal

Direct filtration for arsenic removal can be an economical option for many systems, especially those with existing filtration equipment. The process is fairly straightforward; incoming raw water is chemically dosed to oxidize As^{+3} (arsenite) to As^{+5} (arsenate), ferric coagulant is introduced for adsorption of the arsenic and the filtration system removes the iron-arsenic floc.

The oxidation process is required for removal of arsenite since studies have shown relatively poor removal of arsenite as compared to arsenate. Oxidation chemicals commonly used include chlorine and potassium permanganate. Chlorine is generally preferred, as it does not increase the solids load to the filter system. Potassium permanganate, while a strong oxidant, will increase solids load by manganese addition derived from the oxidation process. Oxygen oxidation reaction is generally considered too slow to be a viable process. Other oxidants such as ozone can be used however these tend to be cost prohibitive when compared to chlorine or potassium permanganate.

Ferric coagulant can be provided by two methods: formation through oxidation of naturally occurring iron in the raw water and chemical coagulant addition. In the first case, naturally occurring iron in the raw water is oxidized from ferrous (soluble) to ferric (insoluble) through aeration or chemical oxidation with chlorine or potassium permanganate. As the ferric floc forms it will provide an adsorption site for arsenic removal. If insufficient raw iron is available, supplemental ferric coagulant can be dosed to the system ahead of the filters. Again, arsenic adsorption will occur with the ferric floc. The chemical bond between the ferric floc and arsenic is generally strong enough that leaching will not occur so landfill application of sludge is possible.

The filtration equipment can be any filter design that is commonly applied to iron and manganese removal plants. These include pressure filters, steel gravity filters, concrete gravity filters or the pre-engineered General Filter AERALATER packaged iron and manganese removal plant. The filter design best suited for the plant is based on criteria including existing infrastructure, size of plant and raw water characteristics. Special design may be required for surface water influenced well supplies. Backwash operation and waste production will be similar to iron and manganese removal facilities. Contact your WTC Technical Sales Manager for assistance in reviewing the filter options.

Removal of arsenic with this process has been demonstrated at almost 100% for pH as high as 8.5. The process also offers the ability to remove other contaminants, most commonly iron and manganese, from the supply. Existing filtration systems benefit from this approach since in many cases a chemical dosing system is the only required addition to perform arsenic removal. The solids load to the filtration system should be limited to 10 ppm or less in order to achieve net water productions above 95%.

Updated: May 2001

WD 1.17 - 10

Direct filtration for arsenic removal is a viable design provided the conditions are right for the process. When higher concentrations of arsenic or other contaminants are present, alternate equipment designs may be required to effectively handle the solids load and provide cost-effective operation. These designs may include coagulation and microfiltration or clarification prior to conventional filtration. Additional information on these process options will be forthcoming.

Updated: May 2001

WD 1.17-11

TECHNOLOGIES AND COSTS FOR REMOVAL OF ARSENIC FROM DRINKING WATER

TARGETING AND ANALYSIS BRANCH
STANDARDS AND RISK MANAGEMENT DIVISION
OFFICE OF GROUND WATER AND DRINKING WATER
UNITED STATES ENVIRONMENTAL PROTECTION AGENCY
WASHINGTON, D.C.

December 2000

INTERNATIONAL CONSULTANTS, INC.
4134 Linden Avenue
Dayton, Ohio 45432

MALCOLM PIRNIE, INC.
432 North 44th Street, Suite 400
Phoenix, Arizona 85008

THE CADMUS GROUP, INC.
135 Beaver Street
Waltham, Massachusetts 02452

Under Contract with the USEPA No. 68-C6-0039
Delivery Order 13

WD 4.17-12

3.9 SEPARATION PROCESSES

3.9.1 Microfiltration

Microfiltration is a low-pressure membrane process which has only a marginal ability to remove arsenic due to its relatively large pore size in comparison to other membrane processes. MF removes contaminants from a feed stream primarily through sieving. Typically, MF does not require pretreatment beyond approximately 500-mm prefiltration. Because MF is not an effective stand-alone technology for removal of arsenic, capital and O&M cost estimates for MF are not provided in this chapter.

3.9.2 Ultrafiltration

Ultrafiltration is a low-pressure membrane process which removes contaminants from a feed stream primarily through sieving. Typically, UF does not require pretreatment beyond approximately 200-mm prefiltration. UF has the benefit of being lower in both capital and O&M costs than high-pressure membrane processes. Because UF is not an effective stand-alone technology for removal of arsenic, capital and O&M cost estimates for UF are not provided in this chapter.

3.9.3 Nanofiltration

Nanofiltration is a high-pressure membrane process capable of significant arsenic removal. NF removes contaminants from a feed stream primarily through a combination of diffusion and sieving mechanisms. Typically, NF requires pretreatment to remove suspended solids and other foulants from the feed stream. NF has greater arsenic removal capabilities than low-pressure membrane processes, however, capital and O&M costs for NF are usually greater than equivalent costs for low-pressure processes. Due to decreased removal efficiency when operated at higher recoveries, NF is not yet demonstrated to be a reliable treatment for arsenic. Because NF is not an effective stand-alone technology for removal of arsenic, capital and O&M cost estimates for NF are not provided in this chapter.

3.9.4 Reverse Osmosis

Reverse Osmosis is a high-pressure membrane process which removes dissolved contaminants from a feed stream primarily through diffusion rather than physical straining. RO requires a high

quality feed stream and often requires substantial pretreatment to remove suspended solids and other foulants. RO also often requires pH adjustment after the membrane process and may require the addition of an anti-scalant before the membrane process. For the purpose of this analysis, costs were not provided for a substantial pre-treatment system, other than the anti-scalant system. RO has the benefit of greater arsenic removal compared to low-pressure membrane processes, but is typically associated with higher capital and O&M costs. Costs are not provided for RO because other options are more cost effective and have much smaller waste streams. RO may be cost effective if removal of other contaminants is needed and water quantity is not a concern.

Both the VSS Model and the W/W Cost Model included cost estimation for RO. Since the W/W Cost Model was assembled, however, RO spiral-wound membrane module costs have decreased by approximately 50 percent. For this reason, the membrane module portion of the capital costs can be reduced by 50 percent. The membrane replacement portion of the O&M costs can also be reduced by 50 percent to account for reductions in membrane costs. The W/W Cost Model for RO was only valid up to a capacity of 200 mgd. The model also makes an assumption that recovery is 80 percent for systems of 1 to 10 mgd, and 85 percent for systems larger than 10 mgd.

3.10 GREENSAND FILTRATION

Greensand filtration is an oxidation filtration process that has demonstrated effectiveness for the removal of arsenic. The greensand filtration medium is produced by treating glauconite sand with $KMnO_4$ until the granular material (sand) is coated with a layer of manganese oxides, particularly manganese dioxide. Arsenic compounds displace species from the manganese oxide (presumably OH^- and H_2O), becoming bound to the greensand surface - in effect an exchange of ions. The oxidative nature of the manganese surface converts As(III) to As(V), and As(V) is adsorbed to the surface.

The VSS model was used for estimating greensand filtration capital and O&M costs. Greensand filtration costs were not included in either the Water Model or the W/W Model. This technology is considered to be a small systems technology and as a result costs were not estimated for larger systems. This technology could be effectively operated in larger system sizes, but cost data are not readily available. The key parameter is the ratio of source water iron and arsenic. If high

WD 1.17-14

TECHNOLOGIES AND COSTS FOR THE REMOVAL OF RADON FROM DRINKING WATER

Presented to:

U.S. Environmental Protection Agency
Office of Ground Water and Drinking Water
401 M Street, SW
Washington, DC 20460

Presented by:

Science Applications International Corporation
1710 Goodridge Drive
McLean, VA 22102

May 1999

EPA Contract No. 68-C6-0059; Work Assignment No. 1-22
SAIC Project No. 01-0833-08-3566-000

Table 4-9a. Capital and O&M Costs for Packed Tower Aeration (PTA)

Design Flow (mgd)	[illegible]	[illegible]	[illegible]	[illegible]	[illegible]	[illegible]	[illegible]	[illegible]	[illegible]
	[illegible]	[illegible]	[illegible]	[illegible]	[illegible]	[illegible]	[illegible]	[illegible]	[illegible]

Ref: AWWA, 2001

WD k 7-16

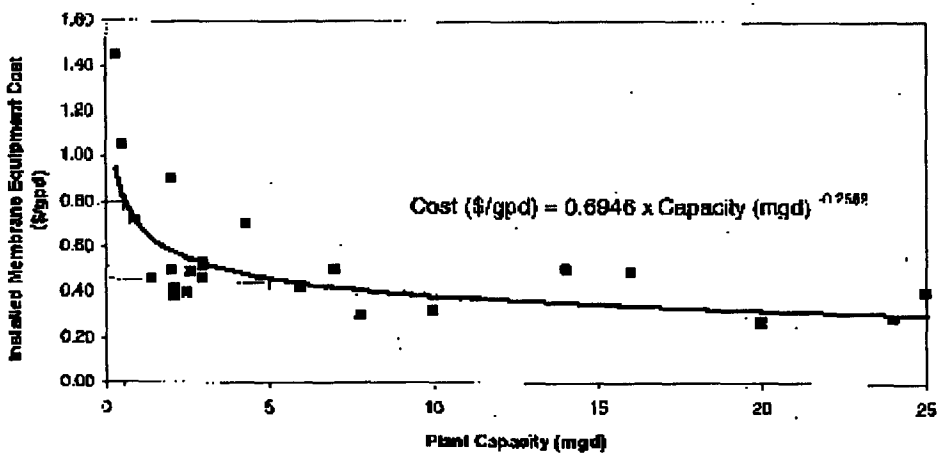

Figure 4 Unit installed equipment cost of membrane filtration plants

The design flux is dependent on feedwater quality and may be determined during pilot testing.

MEMBRANE FILTRATION PLANT CONSTRUCTION COST

Membrane treatment plant construction cost is dependent on the membrane equipment cost, configuration and pretreatment necessary, site constraints, and the building requirements of the facility. The plants surveyed have a range of pretreatment requirements depending on the source water quality. Some of the surveyed membrane plants required more costly site preparation because of existing facilities, while others required special building construction to meet local area needs. These factors have a large impact on the overall unit construction cost of the membrane filtration plants.

Figure 5 shows the total membrane water treatment plant (WTP) construction cost in dollars per gallon of installed membrane capacity ($/gpd). The plant construction data shown in Figure 6 have significantly more scatter than the equipment cost

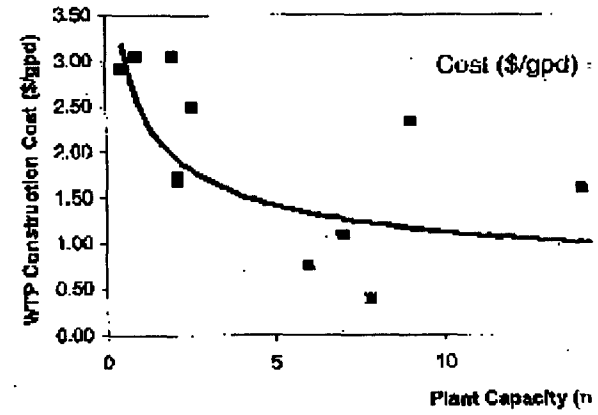

Figure 5 Unit WTP construction cost of meml

data shown in Figure 4. This is due to the water quality and therefore pretreatment pr the plants. An economy of scale exists for tl the plants as they increase in capacity to a mgd, the membrane equipment cost bec percent of the total construction cost of th plant. As plant capacity increases, the econ less significant (see Figure 6).

Figure 6 shows the membrane equipm the total membrane plant construction equipment cost of small plants below 3 mg the total plant construction cost. As pla percentage of the total plant cost from increases to nearly 50 percent of the total mentioned above, as plant size increases, cost becomes the most significant porti equipment cost. Therefore, the membrane little economy of scale, becomes the drivin plants.

WD - 1617

Grant Park Water Treatment Plant
Proposed capacity:

Current maximum day 480,000 gpd

For growth select capacity
of 400 gpm or 576,000 gpd
⇒ 3% growth rate for 6 yr.

Capacity of each well at
Grant Park is currently at
300 gpm (well pump capacity)

WD-617

Capital cost of membrane softening plant

Scale down cost of installed equipment in 5 MGD plant to 0.6 MGD plant

Per CDM study at University Park membrane treatment equipment totals $2,775,000 = $0.55/gpd

Per AWWA study, ratio of $/gpd equipment costs for 0.6 MGD plant vs 5 MGD plant is
0.8/0.45 = 1.78
∴ for 0.6 MGD cost for installed equipment = $0.99/gpd
say $1.00/gpd
or total cost $600,000

TABLE 7
CAPITAL COST ESTIMATE
GRANT PARK STAND-ALONE WATER TREATMENT PLANT
0.6 MGD IRON REMOVAL AND MEMBRANE SOFTENING

ITEM			COST
Iron removal equipment:			
Vertical Pressure Filters	$ 125,000		
Installation Costs	$ 31,250		
Contractor Overhead & Profit	$ 25,000		
Subtotal		$	181,250
Membrane softening equipment		$	600,000
Chlorination system		$	25,000
Pumping equipment		$	200,000
Building (10,000 sq. ft. slab on grade)		$	250,000
Stand-by Generator		$	100,000
Subtotal - Contruction		**$**	**1,356,250**
Percentage Based Construction Items	Assumed %		
Process Piping	10%	$	135,625
HVAC	10%	$	135,625
Electrical	15%	$	203,438
Instrumentation & Controls	15%	$	203,438
Sitework and Yard Piping	10%	$	135,625
Subtotal		**$**	**2,170,000**
Contingency	20%	$	434,000
Estimated Construction Cost		**$**	**2,604,000**
Engineering/Legal/Administration	15%	$	390,600
Total Project Cost		**$**	**2,995,000**

TABLE 8
CAPITAL COST ESTIMATE
GRANT PARK STAND-ALONE WATER TREATMENT PLANT
WATER TREATMENT PLANT PLUS OFFSITE COSTS

ITEM		COST
Water Treatmen Plant		
Iron Removal and Softening (See Table 7)	$ 3,000,000	
Radon Removal (Packed Tower Aeration)	$ 200,000	
Subtotal		$ 3,200,000
Land Costs: 2 Ac. @ $25,000 per Acre		$ 50,000
Ground Storage Tank:		
2,500 gpm for 2 hr = 300,000 gallons		$ 250,000
Raw Water Transmission Mains:		
5,000 ft. @ $50/ft.		$ 250,000
Total Project Costs		**$ 3,750,000**

ILLINOIS COMMERCE COMMISSION

DOCKET NO. 02-0480

RESPONSE OF CONSUMERS ILLINOIS WATER COMPANY

TO ICC DATA REQUEST NO. WD 1.19

Witness Responsible:	Thomas J. Bunosky
Company:	Consumers Illinois Water Company
Job Title:	Vice President
Phone Number:	815-935-8800 Ext. 530

WD 1.19 Provide workpapers, memorandums, and/or studies utilized by Mr. Bunosky to support his statement on page 6 of his draft testimony (lines 126 through 128) " customers in Grant Park will, within ten years and thereafter, provide a rate of return on investment in the System that is at or above the presently allowed rater of return.'

RESPONSE: The attachment (support for CIWC Exhibit D) illustrates that Grant Park customers will, for Year 10 and thereafter, provide a rate of return (9.50%) on investment in the system that is at or above the presently allowed rate of return (9.10%). See Attachment.

CONSUMERS ILLINOIS WATER CO
INCOME STATEMENT & 20-YEAR PRO FORMA
20-YEAR AMORTIZATION OF NEGATIVE ACQUISITION ADJ.
ACQUISITION, VILLAGE OF GRANT PARK
EXHIBIT A

DESCRIPTION	2003	Year 1 2004	Year 2 2005	Year 3 2006	Year 4 2007	Year 5 2008	Year 6 2009	Year 7 2010	Year 8 2011	Year 9 2012	Year 10 2013	Year 11 2014	Year 12 2015	Year 13 2016	Year 14 2017	Year 15 2018	Year 16 2019	Year 17 2020	Year 18 2021	Year 19 2022	Year 20 2023	ASSUMPTIONS
Number of Customers	584	629	667	707	749	794	842	893	946	1003	1063	1127	1194	1266	1342	1423	1508	1598	1694	1796	1904	3.0%/Year; 3.3% historical growth per 1990 - 2000 Census
No. New Customers	34	36	38	40	42	45	48	51	54	57	60	64	68	72	76	81	85	90	96	102	108	
Kankakee Water Rates																						
QUIPS Percentage Rate	2.500%	0.000%	2.500%	2.500%	0.000%	2.500%	2.500%	0.000%	2.500%	2.500%	0.000%	2.500%	2.500%	0.000%	2.500%	2.500%	0.000%	2.500%	2.500%	0.000%	2.500%	
General Rate Requests		18.00%			15.00%			10.00%			10.00%			10.000%			10.000%			10.000%	0.000%	
Customer Charge	10.50	12.39	12.39	12.39	14.25	14.25	14.25	15.67	15.67	15.67	17.24	17.24	17.24	18.96	18.96	18.96	20.86	20.86	20.86	22.95	22.95	15% Rate requests in 2003, & 2006; 10% requests in 2009, & 2012; Eff. 2004, 2007, 2
Water Usage Charge (5,000 gallons avg. consu	11.70	13.81	13.81	13.81	15.88	15.88	15.88	17.46	17.46	17.46	19.21	19.21	19.21	21.13	21.13	21.13	23.25	23.25	23.25	25.57	25.57	Across the board rate impact from filings
Public Fire Protection	2.40	2.83	2.832	2.83	3.26	3.26	3.26	3.58	3.58	3.58	3.94	3.94	3.94	4.33	4.33	4.33	4.77	4.77	4.77	5.25	5.25	Public Fire Protection Charge for Yellowhead Township established in 2003 Rate Req
QIPS	0.82	0.00	0.73	0.73	0.00	0.83	0.83	0.00	0.92	0.92	0.00	1.01	1.01	0.00	1.11	1.11	0.00	1.22	1.22	0.00	0.00	No QUIPS surcharge in case years
Total Avg. Monthly Water Bill	22.82	29.03	29.75	29.75	33.38	34.22	34.22	36.72	37.64	37.64	40.39	41.40	41.40	44.43	45.54	45.54	48.87	50.10	50.10	53.76	53.76	
Estimated Gallons Pumped	39,306,000	39,426,960	39,555,178	39,691,088	39,835,154	39,987,863	40,149,735	40,321,319	40,503,198	40,695,980	40,900,349	41,116,970	41,346,588	41,589,983	41,847,982	42,121,461	42,411,349	42,718,630	43,044,348	43,389,509	43,755,585	
REVENUE (Kankakee Water Rates):																						
Utility Revenue	157,602	197,167	209,034	221,814	270,191	286,446	303,876	354,134	375,430	398,093	464,124	492,024	521,598	608,241	644,793	683,539	797,069	844,957	895,718	1,044,477	1,107,216	2.5% QIPS Annually, plus 15% Rate Requests 2003 & 2006, Eff. 2004 & 2007
Public Fire Protection Charge	0	21,383	22,666	24,026	29,288	31,045	32,908	38,371	40,673	43,113	50,270	53,286	56,484	65,860	69,811	74,000	86,284	91,461	96,949	113,042	119,825	Establish Yellowhead Twp. Public Fire Protection Charge in 2003 ICC Filing - $2.40/m
QIPS	5,566	0	7,297	7,555	0	9,564	10,941	0	12,192	12,817	0	15,801	16,429	0	20,030	21,103	0	25,792	27,198	0	2,623	2.5% QIPS Surcharge in non-case years
School & Industry	4,000	4,720	4,720	4,720	5,428	5,428	5,428	5,971	5,971	5,971	6,568	6,568	6,568	7,225	7,225	7,225	7,947	7,947	7,947	8,742	8,742	
TOTAL REVENUE	167,168	223,270	243,627	257,916	304,907	332,483	352,053	398,475	434,265	459,904	520,962	567,479	601,069	681,325	741,859	785,867	891,301	970,157	1,027,812	1,166,261	1,238,405	
OPERATIONS AND MAINTENANCE:																						
Labor	0	0	0	0	0	0	0	0	0	0	0	0	0	0	0	0	0	0	0	0	0	
Employee Benefits	0	0	0	0	0	0	0	0	0	0	0	0	0	0	0	0	0	0	0	0	0	
Purchased Water	0	0	0	0	0	0	0	0	0	0	0	0	0	0	0	0	0	0	0	0	0	
Power	3,538	3,644	3,753	3,866	3,982	4,101	4,224	4,351	4,481	4,616	4,754	4,897	5,044	5,195	5,351	5,511	5,677	5,847	6,022	6,203	6,389	$90/MG
Chemicals	2,358	2,429	2,502	2,577	2,654	2,734	2,816	2,900	2,987	3,077	3,169	3,265	3,362	3,463	3,567	3,674	3,784	3,898	4,015	4,135	4,259	$60/MG
OUTSIDE SERVICES:																						
Legal	0	0	0	0	0	0	0	0	0	0	0	0	0	0	0	0	0	0	0	0	0	
Corporate	0	0	0	0	0	0	0	0	0	0	0	0	0	0	0	0	0	0	0	0	0	
Contractors Other	2,968	3,240	3,435	3,641	3,858	4,091	4,336	4,597	4,872	5,165	5,475	5,803	6,151	6,520	6,912	7,326	7,766	8,232	8,726	9,249	9,804	Public Works Consultant (DPW) in Years 1- 3; & mainbreak repairs
Testing	584	648	687	728	772	818	867	919	974	1,033	1,095	1,161	1,230	1,304	1,382	1,465	1,553	1,646	1,745	1,850	1,961	$1/Customer
Sludge Removal/Hauling	1,729	1,787	1,793	1,799	1,805	1,812	1,820	1,827	1,836	1,844	1,854	1,863	1,874	1,885	1,897	1,909	1,922	1,936	1,951	1,966	1,983	$44/MG
GPU Billing Services	3,621	3,838	4,069	4,313	4,571	4,846	5,136	5,445	5,771	6,118	6,485	6,874	7,286	7,723	8,187	8,678	9,199	9,750	10,335	10,956	11,613	$6.10/Customer
Pavement & Lawn	1,000	1,030	1,061	1,093	1,126	1,159	1,194	1,230	1,267	1,305	1,344	1,384	1,426	1,469	1,513	1,558	1,605	1,653	1,702	1,754	1,806	1 Mainbreaks/year on average per DPW/- 15 miles of w.m.
LEASES	0	0	0	0	0	0	0	0	0	0	0	0	0	0	0	0	0	0	0	0	0	
SUPPLIES	5,936	6,481	6,870	7,282	7,719	8,182	8,673	9,193	9,745	10,330	10,949	11,606	12,303	13,041	13,823	14,653	15,532	16,464	17,452	18,499	19,609	$10/Customer
TRANSPORTATION	913	940	968	997	1,027	1,058	1,090	1,122	1,156	1,191	1,226	1,263	1,301	1,340	1,380	1,422	1,464	1,508	1,554	1,600	1,648	Add'l mileage - 3 roundtrips per week @ $0.325
INSURANCE	1,090	1,030	1,061	1,093	1,126	1,159	1,194	1,230	1,267	1,305	1,344	1,384	1,426	1,469	1,513	1,558	1,605	1,653	1,702	1,754	1,806	$5.50/Customer
BAD DEBT EXPENSE	836	1,116	1,218	1,290	1,525	1,662	1,760	1,982	2,171	2,300	2,605	2,837	3,005	3,407	3,709	3,929	4,457	4,851	5,139	5,831	6,192	0.5% of Gross Revenue
OTHER EXPENSES:																						
Advertising	584	629	667	707	749	794	842	893	946	1003	1063	1,127	1,194	1,266	1,342	1,423	1,508	1,598	1,694	1,796	1,904	$1/Customer
Charitable Contributions	584	629	667	707	749	794	842	893	946	1003	1063	1,127	1,194	1,266	1,342	1,423	1,508	1,598	1,694	1,796	1,904	$1/Customer
Phone	0	0	0	0	0	0	0	0	0	0	0	0	0	0	0	0	0	0	0	0	0	No add'l phone expense - local calls
Computer & Office	0	0	0	0	0	0	0	0	0	0	0	0	0	0	0	0	0	0	0	0	0	
Postage	0	0	0	0	0	0	0	0	0	0	0	0	0	0	0	0	0	0	0	0	0	
Heating & Electric	0	0	0	0	0	0	0	0	0	0	0	0	0	0	0	0	0	0	0	0	0	1 Elevated Tower - not heated
Dues	0	0	0	0	0	0	0	0	0	0	0	0	0	0	0	0	0	0	0	0	0	
Miscellaneous	6,160	6,345	6,535	6,731	6,933	7,141	7,355	7,576	7,803	8,037	8,279	8,527	8,783	9,046	9,318	9,597	9,885	10,182	10,487	10,802	11,126	$11/Customer - Kankakee average
Capitalized Overheads	0	0	0	0	0	0	0	0	0	0	0	0	0	0	0	0	0	0	0	0	0	
Total Operations & Maintenance	31,840	33,787	35,285	36,823	38,597	40,353	42,150	44,168	46,224	48,325	50,705	53,118	55,580	58,394	61,235	64,126	67,464	70,817	74,219	78,191	82,004	
Amortization of Acquisition Adjustment	(53,897)	(53,897)	(53,897)	(53,897)	(53,897)	(53,897)	(53,897)	(53,897)	(53,897)	(53,897)	(53,897)	(53,897)	(53,897)	(53,897)	(53,897)	(53,897)	(53,897)	(53,897)	(53,897)	(53,897)	0	
Amortized Tank Painting	0	0	0	0	0	0	11,000	11,000	11,000	11,000	11,000	11,000	11,000	11,000	11,000	11,000						
Depreciation	70,088	70,652	72,582	74,612	75,284	77,764	80,375	81,175	84,276	87,544	88,497	92,380	96,495	97,630	102,535	107,710	109,062	115,261	121,806	123,416	125,608	2.64% Composite Rate
Taxes - Other	0	0	0	0	0	0	0	0	0	0	0	0	0	0	0	0	0	0	0	0	0	
Capital Investment Tax	0	0	0	0	0	0	0	0	0	0	1	2	3	4	5	6	7	8	8	8	8	0.433% of Rate Base
Federal Taxes	(6,363)	11,463	17,104	20,676	35,516	43,295	44,682	59,211	69,418	76,172	95,406	108,804	117,808	143,233	160,822	172,797	210,030	233,122	249,017	293,289	314,421	35% effective rate
State Taxes	(3,838)	(1,066)	(254)	261	2,399	3,520	3,719	5,812	7,283	8,256	11,026	12,957	14,254	17,916	20,450	22,175	27,539	30,865	33,155	38,533	45,295	4.8% effective rate
Total Other Expenses	8,159	27,152	35,535	41,652	59,304	70,682	85,879	103,301	118,080	129,074	152,032	171,254	185,861	215,884	240,913	259,789	292,739	325,357	350,089	402,349	485,331	
Operating Income	129,169	162,331	172,807	179,441	207,005	221,448	224,024	251,006	269,962	282,505	318,225	343,107	359,829	407,047	439,711	461,851	531,098	573,963	603,504	685,722	671,070	
Minority Interest of Subs	0	0	0	0	0	0	0	0	0	0	0	0	0	0	0	0	0	0	0	0	0	
Other (Income)/Expense:																						
Non-Utility Income	0	0	0	0	0	0	0	0	0	0	0	0	0	0	0	0	0	0	0	0	0	
AFUDC	0	0	0	0	0	0	0	0	0	0												
Income Before Debt Expense	129,169	162,331	172,807	179,441	207,005	221,448	224,024	251,006	269,962	282,505	318,225	343,107	359,829	407,047	439,711	461,851	531,098	573,963	603,504	685,722	671,070	
Interest - Debt	87,146	87,146	87,146	87,146	87,146	87,146	87,146	87,146	87,146	87,146	87,146	87,146	87,146	87,146	87,146	87,146	87,146	87,146	87,146	87,146	87,146	50% Debt on Rate Base @ 6% Weighted Average Cost of Capital
Other Interest Expense	0	0	0	0	0	0	0	0	0	0	0	0	0	0	0	0	0	0	0	0	0	
Amort. of Debt Costs	0	0	0	0	0	0	0	0	0	0	0	0	0	0	0	0	0	0	0	0	0	
Debt Expense	87,146	87,146	87,146	87,146	87,146	87,146	87,146	87,146	87,146	87,146	87,146	87,146	87,146	87,146	87,146	87,146	87,146	87,146	87,146	87,146	87,146	
Inc. Before Extraordinary Items	42,024	75,185	85,661	92,295	119,859	134,302	136,878	163,860	182,816	195,359	231,079	255,962	272,683	319,901	352,566	374,806	443,952	486,837	516,358	598,576	583,924	
Extraordinary Deductions	0	0	0	0	0	0	0	0	0	0	0	0	0	0	0	0	0	0	0	0	0	
Net Income	42,024	75,185	85,661	92,295	119,859	134,302	136,878	163,860	182,816	195,359	231,079	255,962	272,683	319,901	352,566	374,806	443,952	486,837	516,358	598,576	583,924	
Preferred Dividends	0	0	0	0	0	0	0	0	0	0	0	0	0	0	0	0	0	0	0	0	0	
Net Income Available for Common	42,024	75,185	85,661	92,295	119,859	134,302	136,878	163,860	182,816	195,359	231,079	255,962	272,683	319,901	352,566	374,806	443,952	486,837	516,358	598,576	583,924	
Equity	1,452,429	1,454,737	1,461,944	1,510,036	1,512,068	1,547,097	1,583,300	1,584,818	1,628,365	1,673,431	1,674,183	1,728,674	1,728,674	1,728,674	1,728,674	1,728,674	1,728,674	1,728,674	1,728,674	1,728,674	1,728,674	50% Debt-to-Equity
Return on Equity	2.89%	5.17%	5.78%	6.11%	7.93%	8.68%	8.65%	10.34%	11.23%	11.67%	13.80%	14.81%	15.77%	18.51%	20.40%	21.68%	25.68%	28.16%	29.87%	34.63%	33.78%	
Beginning Rate Base	2,904,858	2,904,858	2,909,473	2,963,888	3,020,071	3,024,136	3,094,194	3,166,600	3,169,635	3,256,730	3,346,862	3,348,365	3,457,347	3,570,255	3,569,522	3,706,673	3,848,898	3,844,946	4,018,410	4,198,430	4,189,907	
Less: Depreciation		(70,652)	(72,582)	(74,612)	(75,284)	(77,764)	(80,375)	(81,175)	(84,276)	(87,544)	(88,497)	(92,380)	(96,495)	(97,630)	(102,535)	(107,710)	(109,062)	(115,261)	(121,806)	(123,416)	(125,608)	
Plus: Acquisition Adjustment		53,897	53,897	53,897	53,897	53,897	53,897	53,897	53,897	53,897	53,897	53,897	53,897	53,897	53,897	53,897	53,897	53,897	53,897	53,897	-	
Services/Meters		21,370	22,852	24,011	25,452	26,979	28,597	30,313	32,132	34,060	36,103	38,270	40,566	43,000	45,580	48,315	51,213	54,286	57,543	60,986	64,656	
QIPS Capital			50,448	52,887	-	66,946	70,287	-	85,342	89,719	-	109,205	114,940	-	140,209	147,723	-	180,542	190,386	-	18,358	
Ending Rate Base	2,904,858	2,909,473	2,963,888	3,020,071	3,024,136	3,094,194	3,166,600	3,169,635	3,256,730	3,346,862	3,348,365	3,457,347	3,570,255	3,569,522	3,706,673	3,848,898	3,844,946	4,018,410	4,198,430	4,189,907	4,147,313	
Rate of Return	4.45%	5.58%	5.83%	5.94%	6.85%	7.16%	7.07%	7.92%	8.29%	8.44%	9.50%	9.92%	10.08%	11.40%	11.86%	12.00%	13.81%	14.28%	14.37%	16.37%	16.18%	
Allowed Rate of Return	9.10%	9.10%	9.10%	9.10%	9.10%	9.10%	9.10%	9.10%	9.10%	9.10%	9.10%	9.10%	9.10%	9.10%	9.10%	9.10%	9.10%	9.10%	9.10%	9.10%	9.10%	

VILLAGE OF GRANT PARK ACQUISITION				
Capital Investments:				
Cash Tender				$ -
Additional:				
Purchase Meter Inventory (350)				$ -
Other				$ -
Cash Tender				$ 66,000
Closing Cost (not to exceed)				$ -
Total Cash Tender				$ 66,000
Capital Improvements:				
Interconnect w/ Kankakee Water System (20" water main extension):				
47,520 LF Transmission Main (Diversatech to GP)				$ 1,661,858
Labor & O/H - Transmission Main				$ 330,000
Booster Station				$ 300,000
Engineering/CAD/Staking				$ 110,000
Easements				$ 137,000
Permits				$ 50,000
Legal Fees				$ 75,000
Original Cost Study				$ 20,000
ICC Filing Debt Issuance Fees				$ 5,000
Organization				$ 50,000
Contingency				$ 100,000
			Beginning Rate Base	**$ 2,904,858**

ILLINOIS COMMERCE COMMISSION

DOCKET NO. 02-0480

RESPONSE OF CONSUMERS ILLINOIS WATER COMPANY

TO ICC DATA REQUEST NO. WD 1.23

Witness Responsible:	Thomas J. Bunosky
Company:	Consumers Illinois Water Company
Job Title:	Vice President
Phone Number:	815-935-8800 Ext. 531

WD 1.23 Based Exhibit C of Mr. Bunosky's draft testimony, if CIWC constructs the additional facilities to correct the Environmental violations, would the existing customers being served by Kankakee subsidize these facilities?

RESPONSE: No. As demonstrated in Exhibit D, over a reasonable period of time, existing customers being served by Kankakee will not subsidize these facilities. The Exhibit shows that, within ten years and for all years thereafter, customers in Grant Park paying rates set for the Kankakee Division provide a rate of return above the level of the presently authorized rate of return. This calculation includes in the rate base for Grant Park all costs related to the Systems Improvements, including the environmental facilities shown on CIWC Exhibit C.

ILLINOIS COMMERCE COMMISSION

DOCKET NO. 02-0480

RESPONSE OF CONSUMERS ILLINOIS WATER COMPANY

TO ICC DATA REQUEST NO. WD 1.27

Witness Responsible:	Thomas J. Bunosky
Company:	Consumers Illinois Water Company
Job Title:	Vice President
Phone Number:	815-935-8800 Ext. 530

WD 1.27 If the revenues set forth on CIWC Exhibit D of Mr. Bunosky's Draft Testimony, does not include miscellaneous charges, such as connection fees, please provide all the rates an[d]/or charges that the Village of Grant Park asses[ses] its customers they serve. Also, if additional charges and/or fees are asses[sed] to the Grant Park customers outside of the Village limits please provide.

RESPONSE: CIWC Exhibit D shows the rate of return on CIWC's investment in the Grant Park system when the Kankakee Division rates are applied in Grant Park. Grant Park recently imposed a connection fee of $1,100 per residential connection, but as indicated, Grant Park fees and charges are not used in developing CIWC Exhibit D. CIWC does not impose a connection fee. The Village of Grant Park does not serve water customers outside of the Village's corporate limits.