APPROACH LENGTHS ALLOW FOR:	
TIME IN SECONDS	CWT E.B./W.B. APPROACH
STANDARD MUTCD MIN. TIME	20
DESIGNED WARNING TIME	26-30
EQUIPMENT RESPONSE TIME	4
TOTAL TIME	30
MAX. SPEED (M.P.H.)	40
APPROACH DISTANCE (FEET)	1752

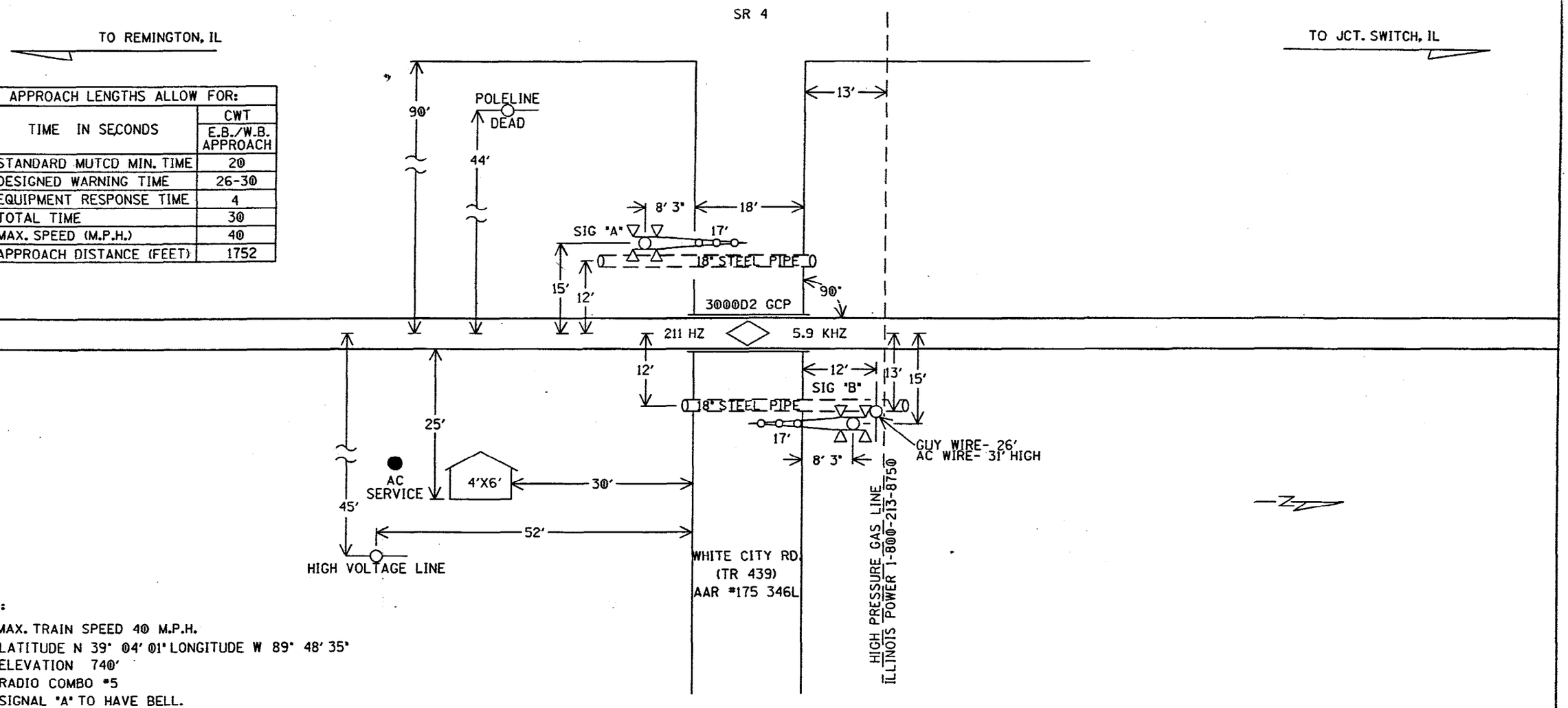

NOTES:

1. MAX. TRAIN SPEED 40 M.P.H.
2. LATITUDE N 39° 04' 01" LONGITUDE W 89° 48' 35"
   ELEVATION 740'
3. RADIO COMBO #5
4. SIGNAL "A" TO HAVE BELL.
4. LOCATE U/G UTILITIES & CABLE BEFORE DIGGING.
5. CROSSING LOCATED IN MACOUPIN COUNTY.
6. NEAREST STREET ADDRESS IS
   N/A
7. NEAREST INTERSECTING STREET IS
   SR-4
8. THE STATE NEEDS TO EXTEND THE 18" STEEL PIPES IN THE NORTHEAST AND SOUTHWEST QUADRANTS.

must

10' with proper fill,
CL 4-18-00

IN SERVICE _____ SIGNED _____ DATE

☐ S&E ENGINEERING COPY
☐ CONSTRUCTION OFFICE COPY
RETURN TO S&E ENG. AFTER COMPLETION
☐ FIELD COPY
RETURN TO CASE AFTER COMPLETION
☐ PROJECT ENGINEER COPY

SCALE: 1" = 20'
PROJECT #04.0425
LAYOUT
FILE No. 061-04.462

DESIGNED BY: CWO 04-07-00	NORFOLK SOUTHERN
DRAWN BY: SSC 04-07-00	OFFICE OF ASS'T. VICE PRESIDENT COMM. & SIGNAL, ATLANTA, GA. — M.P.: UP-113.43
CHECKED BY: NT 04-10-00	MONTEREY MINE LINE SAWYERVILLE, IL FLGS AT WHITE CITY RD.
IN SERVICE: - -	BROOKLYN DISTRICT — FILE No. R-
	CADD or DWG. No. BKUP11343.01 — SHEET No. 1 of 13

REVISION INITIALS

PROPERTY
NORFOLK SOUTHERN RAILWAY CO.

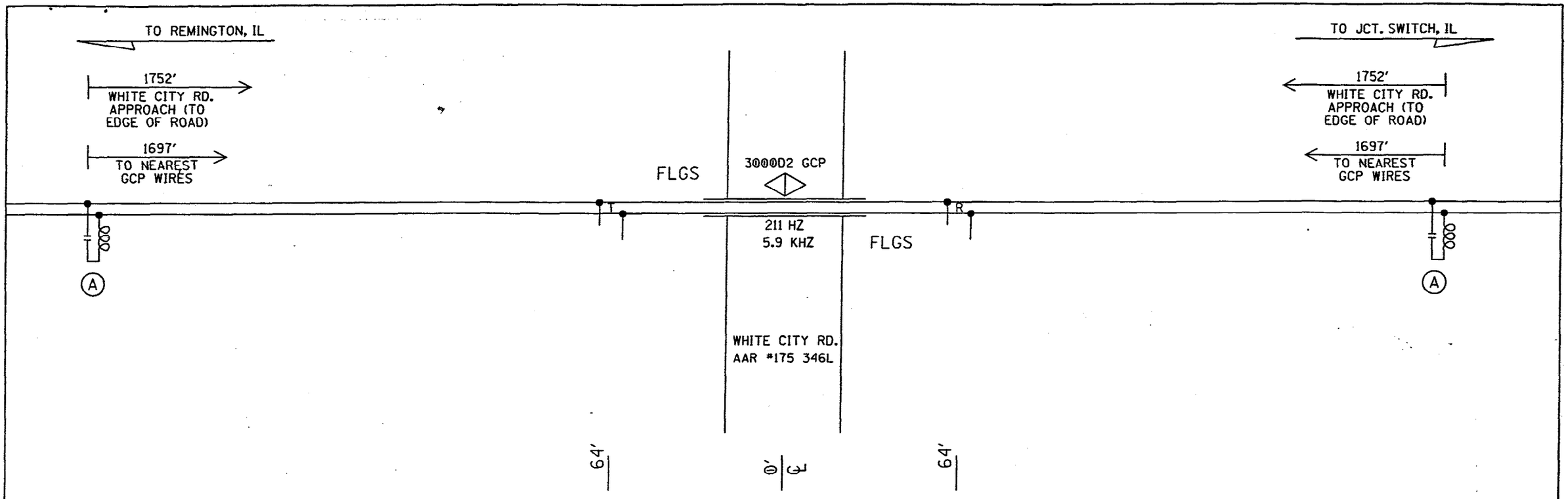

(A)- MF-NBS 62775-1543 (211HZ)

PROFILE

DESIGNED BY: CWO 04-07-00	NORFOLK SOUTHERN
DRAWN BY: SSC 04-07-00	OFFICE OF ASS'T. VICE PRESIDENT COMM. & SIGNAL, ATLANTA, GA. — M.P.: UP-113.43
CHECKED BY: NT 04-10-00	MONTEREY MINE LINE SAWYERVILLE, IL FLGS AT WHITE CITY RD.
IN SERVICE: - -	BROOKLYN DISTRICT — FILE No. R-
	CADD or DWG. No. BKUP11343.02 — SHEET No. 2 of 13

REVISION INITIALS

PROPERTY
NORFOLK SOUTHERN RAILWAY CO.

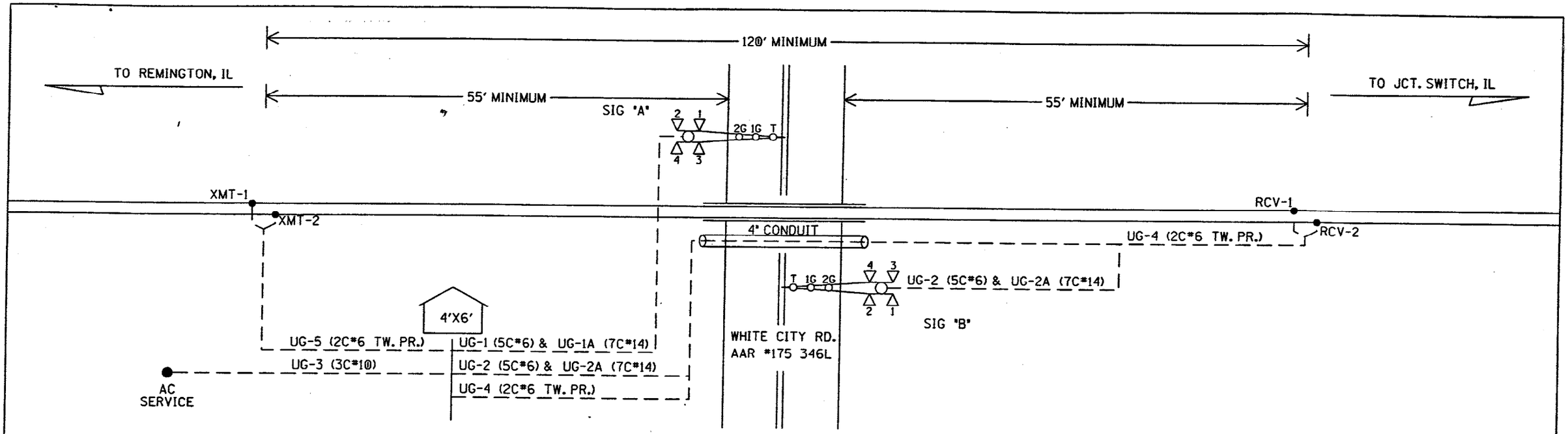

UG-1-5CUG #6
- AEZ
- AEB
- AEC
- B16-A
- N16-A

UG-2-5CUG #6
- BEZ
- BEB
- BEC
- B16-B
- N16-B

UG-1A-7CUG #14
- AXX
- AXG
- XGP2
- 1AXX
- SPARE
- SPARE
- SPARE

UG-2A-7CUG #14
- BXG
- XGP1
- XGP
- BXX
- 1BXX
- SPARE
- SPARE

UG-3-3CUG #10
- BX120-A
- BX120-B
- NX120

UG-4-TW. PR. #6
- RCV-1
- RCV-2

UG-5-TW. PR. #6
- XMT-1
- XMT-2

CABLE

DESIGNED BY: CWO 04-07-00	NORFOLK SOUTHERN		
DRAWN BY: SSC 04-07-00	OFFICE OF ASS'T. VICE PRESIDENT COMM. & SIGNAL, ATLANTA, GA.	M.P.: UP-113.43	
CHECKED BY: NT 04-10-00	MONTEREY MINE LINE SAWYERVILLE, IL FLGS AT WHITE CITY RD.		
IN SERVICE: - -	BROOKLYN DISTRICT	FILE No. R-	
	CADD or DWG. No. BKUP11343.03	SHEET No. 3 of 13	

REVISION INITIALS

PROPERTY
NORFOLK SOUTHERN RAILWAY CO.

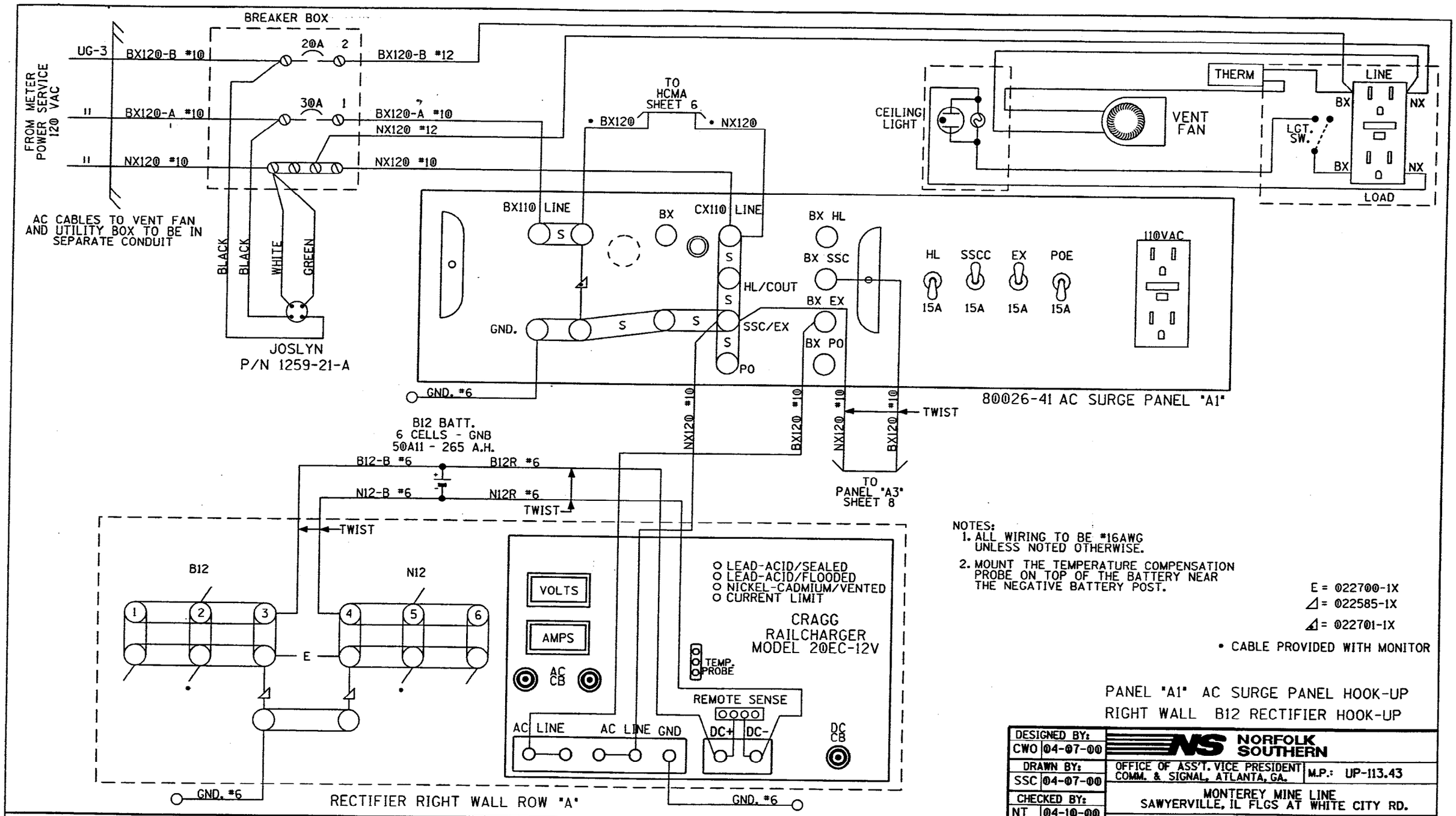

NOTES:
1. ALL WIRING TO BE #16AWG UNLESS NOTED OTHERWISE.
2. MOUNT THE TEMPERATURE COMPENSATION PROBE ON TOP OF THE BATTERY NEAR THE NEGATIVE BATTERY POST.

E = 022700-1X
⊿ = 022585-1X
⊿ = 022701-1X
• CABLE PROVIDED WITH MONITOR

PANEL "A1" AC SURGE PANEL HOOK-UP
RIGHT WALL B12 RECTIFIER HOOK-UP

DESIGNED BY: CWO 04-07-00	NORFOLK SOUTHERN	
DRAWN BY: SSC 04-07-00	OFFICE OF ASS'T. VICE PRESIDENT COMM. & SIGNAL, ATLANTA, GA.	M.P.: UP-113.43
CHECKED BY: NT 04-10-00	MONTEREY MINE LINE SAWYERVILLE, IL FLGS AT WHITE CITY RD.	
IN SERVICE: - -	BROOKLYN DISTRICT	FILE No. R-
	CADD or DWG. No. BKUP11343.04	SHEET No. 4 of 13

REVISION INITIALS

PROPERTY
NORFOLK SOUTHERN RAILWAY CO.

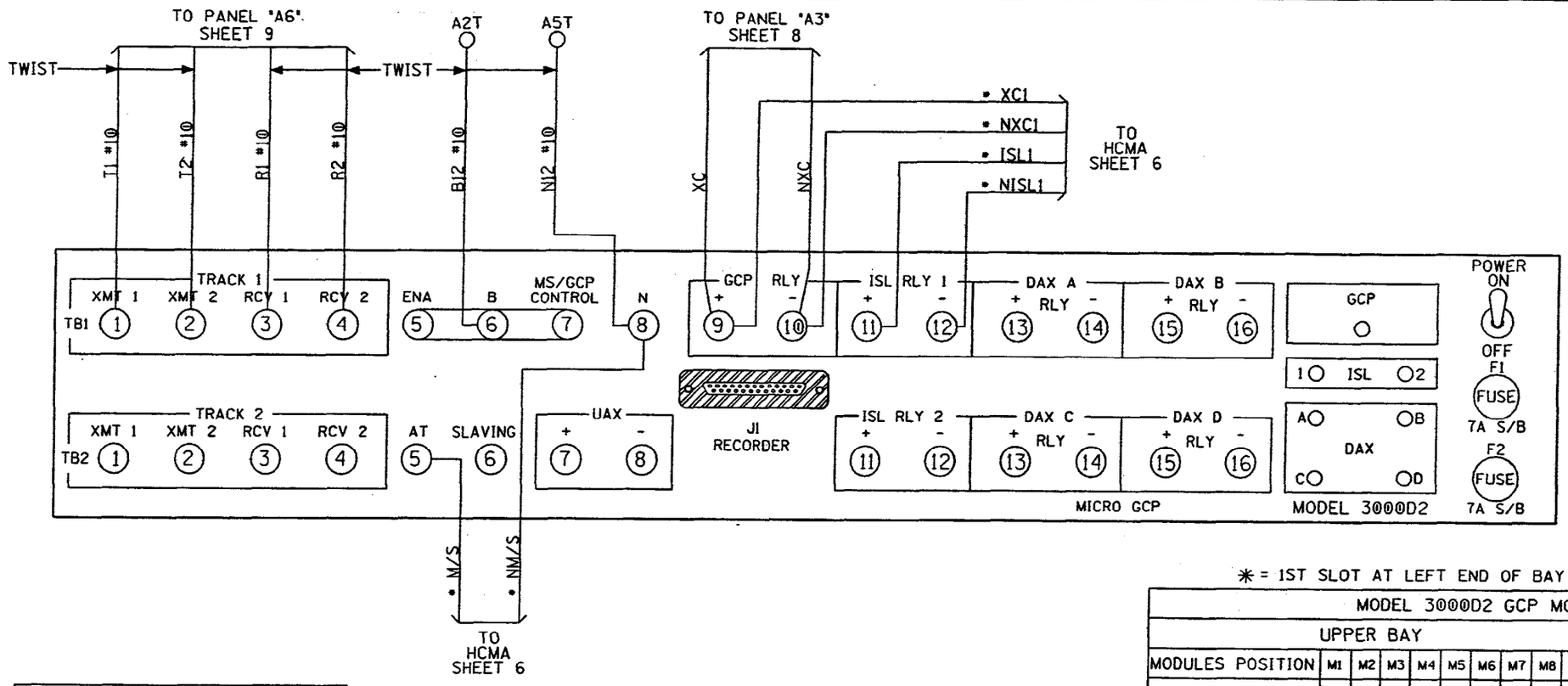

3000D2 GCP "A2"

T1 IF = 5.9 KHZ
T2 IF = --.- KHZ

✳ = 1ST SLOT AT LEFT END OF BAY

MODEL 3000D2 GCP MODULE ASSEMBLIES

MODULES POSITION	UPPER BAY M1	M2	M3	M4	M5	M6	M7	M8	M9	M10	LOWER BAY M11	M12	M13	M14	M15	M16	M17	M18	M19	M20	M21
MODULE NUMBERS	80211-f(1)✳	80211-f(2)	80012 T/R 1	80012 T/R 2	80013 RLY DRV	80214 PROCS	80015 LOGG	80016 (1)DAX	80016 (2)DAX	80020 +80017	80211-f(1)✳	80211-f(2)	80012 T/R 1	80012 T/R 2	80013 RLY DRV	80214 PROCS	80015 LOGG	80016 (1)DAX	80016 (2)DAX	80020 +80017	80028 XFRTMR
MODULES USED	X		X		X	X				X	X		X		X	X				X	X

3000D2 PROGRAMMING

* OF TKS/TRANSCEIVERS	1
T1 FREQUENCY	211Hz
T2 FREQUENCY	--- Hz
T1 UNI/BIDIRECTIONAL	BI
T2 UNI/BIDIRECTIONAL	---
T1 POWER-MAX/MED	MED
T2 POWER-MAX/MED	---
T1 PRED/MS	PRED
T2 PRED/MS	----
T1 WARNING TIME	30 Sec
T2 WARNING TIME	-- Sec
T1 APPROACH DIST	1697 Ft
T2 APPROACH DIST	---- Ft
UAX PU DLY (0=OFF)	0 Sec
ENA/UAX PU DLY(0=OFF)	0 Sec
T1 ISL DIST	128 Ft
T2 ISL DIST	---- Ft
* OF DAX'S	0 Ea

DAX A = T1/T2?	TRACK=
DAX A DIST	Ft
DAX A WARN TIME	Sec
DAX B = T1/T2?	TRACK=
DAX B DIST	Ft
DAX B WARN TIME	Sec
DAX C = T1/T2?	TRACK=
DAX C DIST	Ft
DAX C WARN TIME	Sec
DAX D = T1/T2?	TRACK=
DAX D DIST	Ft
DAX D WARN TIME	Sec
MASTER?/SLAVE?	MASTER
PASSWORD NO/YES	NO
RECORDER NO/YES	NO

EXPANDED PROGRAMMING

T1-SW TO MS AT 10 % OF EZ	
T2-SW TO MS AT -- % OF EZ	
T1-DELAY MS TO GCP	0 Sec
T2-DELAY MS TO GCP	--- Sec
T1 PRIME PRE. OFFSET	0 Ft
T2 PRIME PRE. OFFSET	--- Ft
PRIME PU TIME DELAY	15 Sec
DAX A PU DELAY	Sec
DAX B PU DELAY	Sec
DAX C PU DELAY	Sec
DAX D PU DELAY	Sec
ENHANCED DETECT MODE	OFF
BACK-TO-BACK	OFF
STATION STOP TIMER	10 Sec
T1* OF TRK. WIRES 4/6	4
T2* OF TRK. WIRES 4/6	-
LOW EX ADJUSTMENT	0

NOTES:
1 - SEE IPI INSTRUCTION AND INSTALLATION MANUAL FOR 80211 ISLAND CALIBRATION PROCEDURE.

2 - TOGGLE SWITCH ON MOTHER BOARD:
UP = DUAL FREQ.
DOWN = SINGLE FREQ.

3 - ALL WIRING #16AWG UNLESS NOTED OTHERWISE.

* CABLE PROVIDED WITH MONITOR

PANEL "A2" 3000D2 GCP HOOK-UP

DESIGNED BY: CWO	04-07-00
DRAWN BY: SSC	04-07-00
CHECKED BY: NT	04-10-00
IN SERVICE:	- -

NORFOLK SOUTHERN

OFFICE OF ASS'T. VICE PRESIDENT COMM. & SIGNAL, ATLANTA, GA. M.P.: UP-113.43

MONTEREY MINE LINE
SAWYERVILLE, IL FLGS AT WHITE CITY RD.

BROOKLYN DISTRICT FILE No. R-

CADD or DWG. No. BKUP11343.05 SHEET No. 5 of 13

REVISION INITIALS

PROPERTY
NORFOLK SOUTHERN RAILWAY CO.

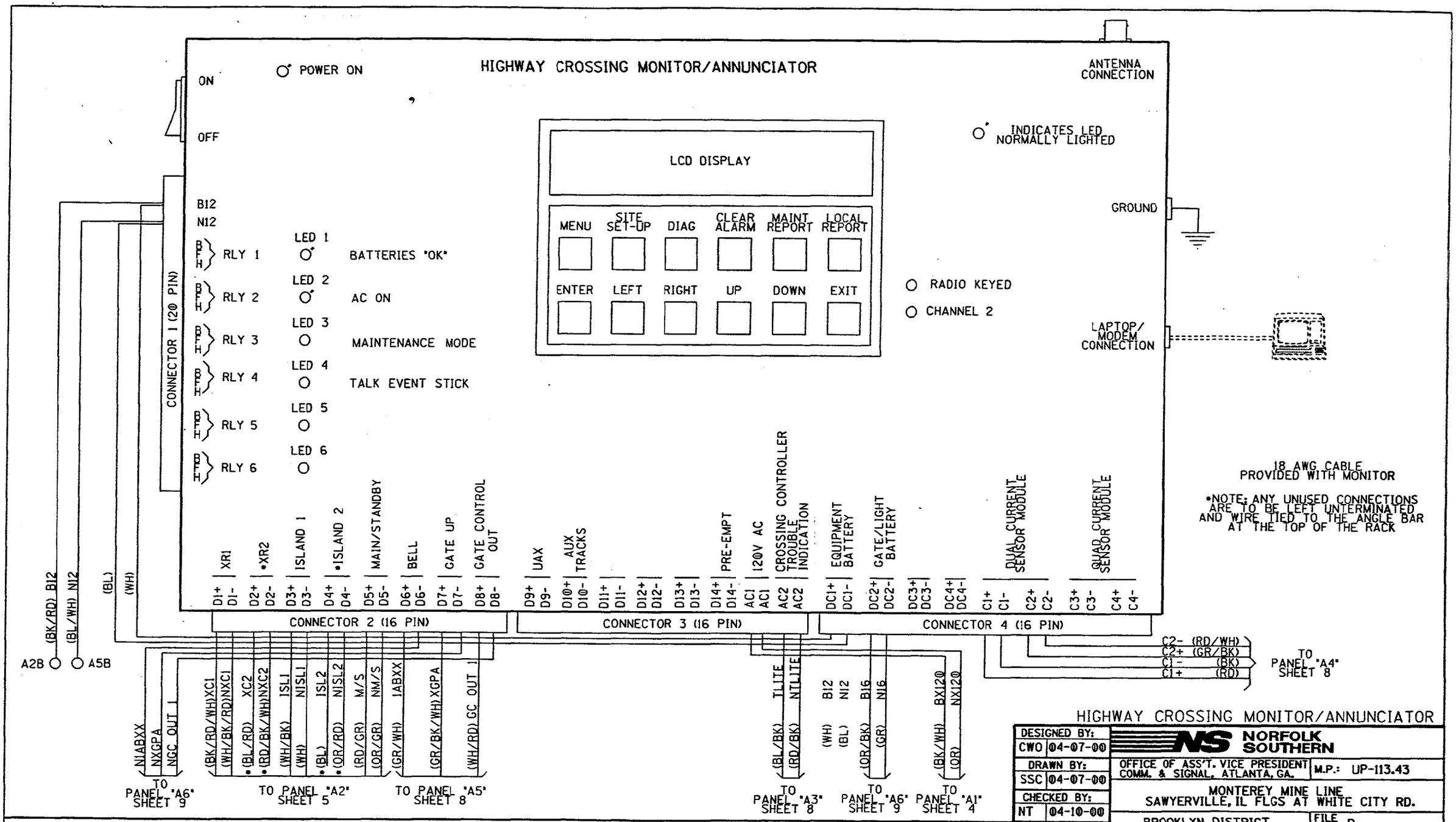

HIGHWAY CROSSING MONITOR/ANNUNCIATOR

DESIGNED BY: CWO 04-07-00	NORFOLK SOUTHERN		
DRAWN BY: SSC 04-07-00	OFFICE OF ASS'T. VICE PRESIDENT COMM. & SIGNAL, ATLANTA, GA.	M.P.: UP-113.43	
CHECKED BY: NT 04-10-00	MONTEREY MINE LINE SAWYERVILLE, IL FLGS AT WHITE CITY RD.		
IN SERVICE: - -	BROOKLYN DISTRICT	FILE No. R-	
	CADD or DWG. No. BKUP11343.06	SHEET No. 6 of 13	

REVISION INITIALS

PROPERTY
NORFOLK SOUTHERN RAILWAY CO.

SITE SET UP PROCEDURE	
FUNCTION	LED DISPLAY
DATE	- -
TIME	:
DAYLIGHT SAVINGS TIME	
SITE NAME	WHITE CITY RD.
DOT NUMBER	175 346L
MILEPOST	UP-113.43
HOP ALARMS ?	NO HOP ALARAMS
# OF TRACKS	1

CONTROL SYSTEM CONFIGURATION MENU QUESTIONS	
THE QUESTION	SELECT FROM MENU OPTION
GATES INSTALLED?	GATES INSTALLED
AC/DC POWERED LAMPS?	DC POWERED LAMPS
CROSSING CONTROLLER?	CROSSING CONTROLLER
MAIN/STANDBY GCP?	MASTER/STANDBY
# OF CURRENT SENSOR LOOPS USED?	C1, C2 USED
# OF BATTERY BANKS MONITORED?	TWO BATTERY BANKS
IS THERE A UAX INPUT (IS INPUT D9 WIRED)?	NO UAX INSTALLED
ARE ALARMS BROADCAST ON RADIO?	DO NOT TALK ALARMS
ARE AUXILIARY TRACKS MONITORED (IS INPUT D10 WIRED)?	NO AUXILIARY TRACKS
IS THIS UNIT A FRA TESTER?	NO FRA TESTER
LAMP OPERATION	NORMAL
IS BELL DETECTOR INSTALLED?	NO BELL DETECTOR INSTALLED
IS PRE-EMPT CIRCUIT USED?	NO PRE-EMPT CIRCUIT
DOUBLE TRACK ONLY. HOW MANY XR INPUTS?	

VERIFY NUMBER OF BULBS	
CURR 1: LAMP SET UP	8 BULBS
CURR 2: LAMP SET UP	8 BULBS
CURR 3: LAMP SET UP	BULBS
CURR 4: LAMP SET UP	BULBS
NORMAL OR SPLIT LAMP CALIBRATION	NORMAL

VERIFY THE BATTERY SUPPLY VOLTAGES	
BATTERY VOLTAGE AT INPUT DC1	VOLT 1: .
BATTERY VOLTAGE AT INPUT DC2	VOLT 2: .
BATTERY VOLTAGE AT INPUT DC3	VOLT 3: .
BATTERY VOLTAGE AT INPUT DC4	VOLT 4: .

HCMA SET UP CHART

DESIGNED BY: CWO 04-07-00	NORFOLK SOUTHERN		
DRAWN BY: SSC 04-07-00	OFFICE OF ASS'T. VICE PRESIDENT COMM. & SIGNAL, ATLANTA, GA.	M.P.: UP-113.43	
CHECKED BY: NT 04-10-00	MONTEREY MINE LINE SAWYERVILLE, IL FLGS AT WHITE CITY RD.		
IN SERVICE: - -	BROOKLYN DISTRICT	FILE No. R-	
	CADD or DWG. No. BKUP11343.07	SHEET No. 7 of 13	

REVISION INITIALS											

PROPERTY
NORFOLK SOUTHERN RAILWAY CO.

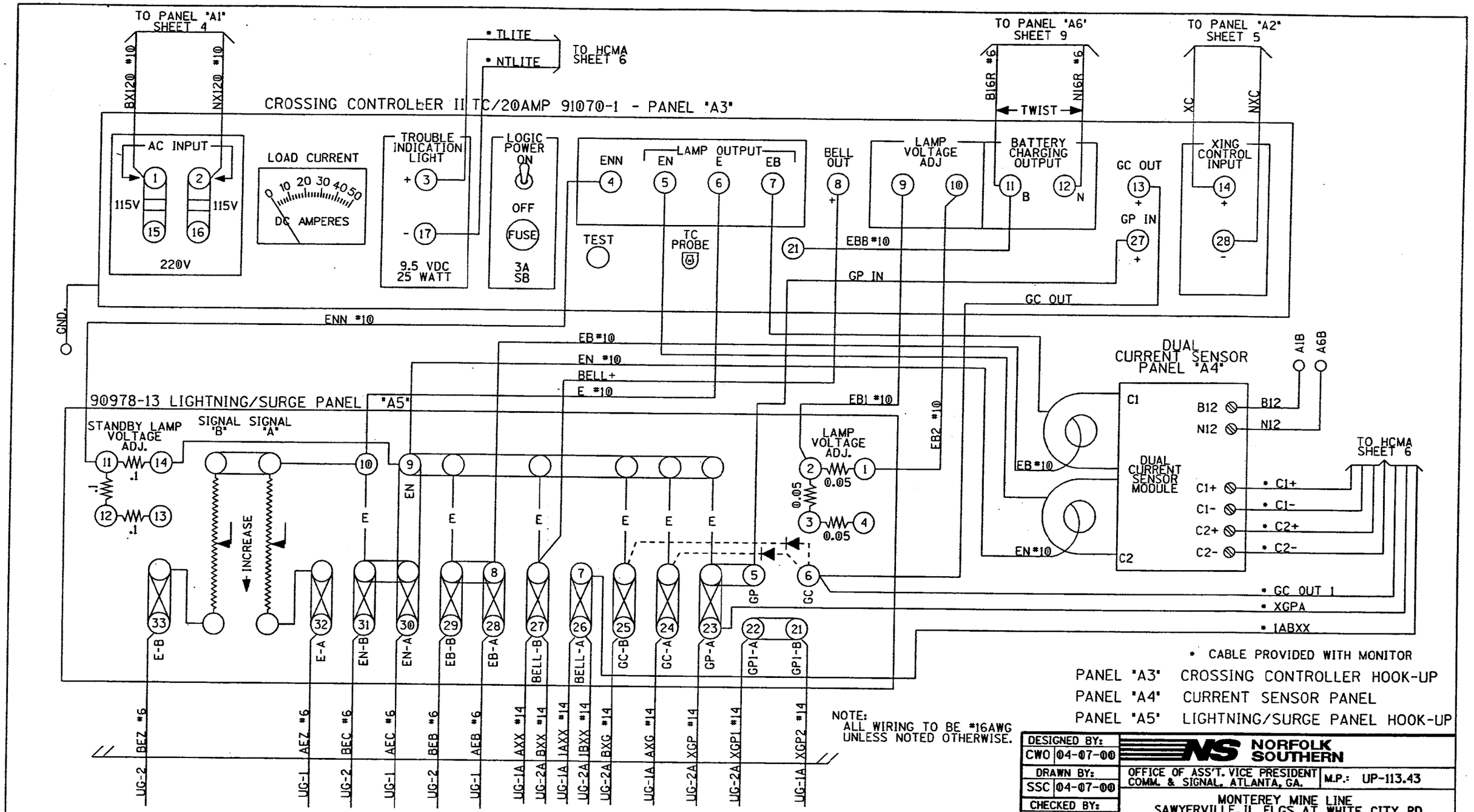

* CABLE PROVIDED WITH MONITOR

PANEL "A3" CROSSING CONTROLLER HOOK-UP
PANEL "A4" CURRENT SENSOR PANEL
PANEL "A5" LIGHTNING/SURGE PANEL HOOK-UP

NOTE:
ALL WIRING TO BE #16AWG
UNLESS NOTED OTHERWISE.

DESIGNED BY: CWO 04-07-00	NORFOLK SOUTHERN		
DRAWN BY: SSC 04-07-00	OFFICE OF ASS'T. VICE PRESIDENT COMM. & SIGNAL, ATLANTA, GA.	M.P.: UP-113.43	
CHECKED BY: NT 04-10-00	MONTEREY MINE LINE SAWYERVILLE, IL FLGS AT WHITE CITY RD.		
IN SERVICE: - -	BROOKLYN DISTRICT	FILE No. R-	
	CADD or DWG. No. BKUP11343.08	SHEET No. 8 of 13	

REVISION INITIALS	

PROPERTY
NORFOLK SOUTHERN RAILWAY CO.

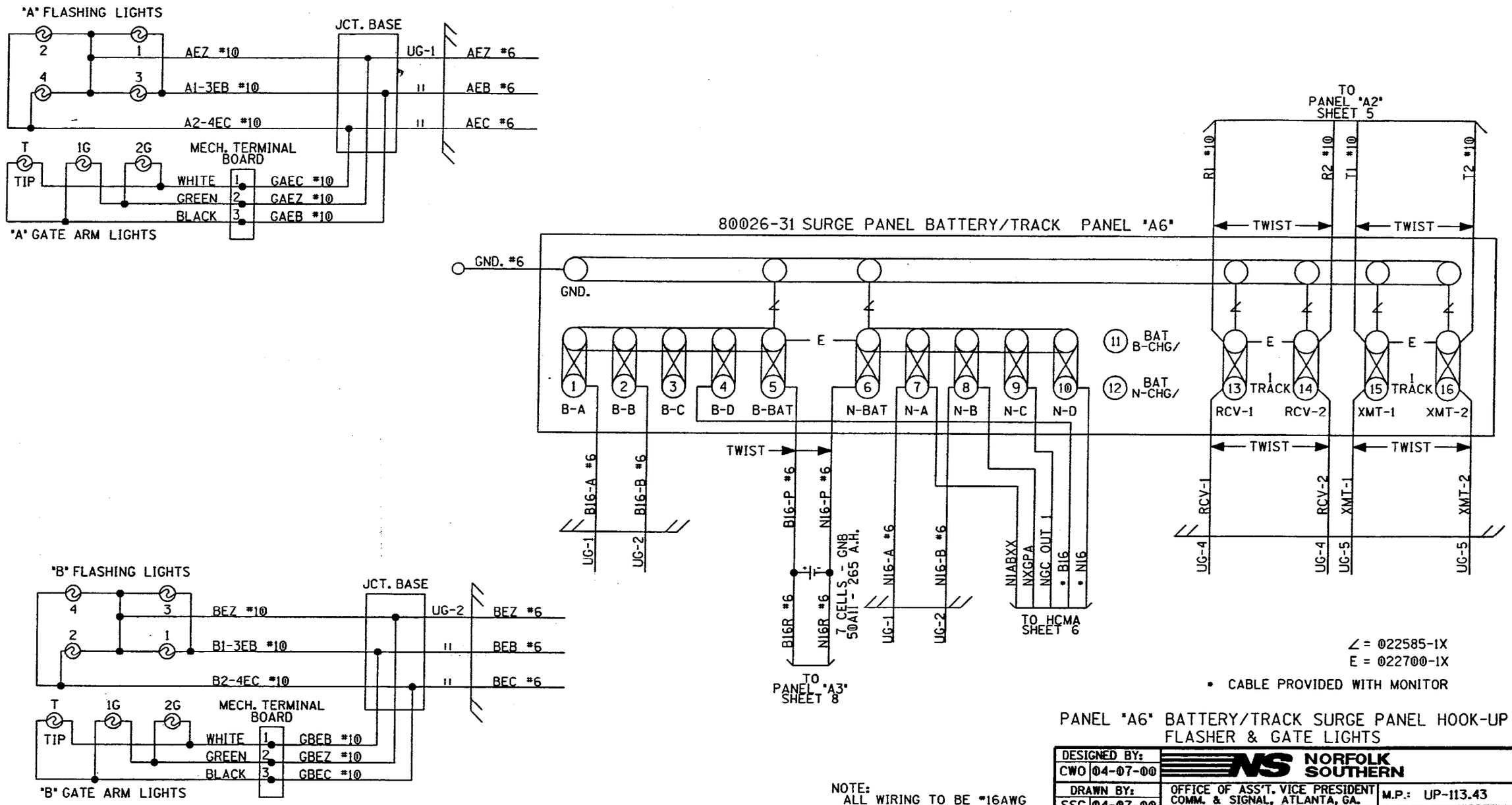

∠ = 022585-1X
E = 022700-1X

* CABLE PROVIDED WITH MONITOR

NOTE:
ALL WIRING TO BE #16AWG
UNLESS NOTED OTHERWISE.

PANEL "A6" BATTERY/TRACK SURGE PANEL HOOK-UP
FLASHER & GATE LIGHTS

DESIGNED BY: CWO 04-07-00	NORFOLK SOUTHERN	
DRAWN BY: SSC 04-07-00	OFFICE OF ASS'T. VICE PRESIDENT COMM. & SIGNAL, ATLANTA, GA.	M.P.: UP-113.43
CHECKED BY: NT 04-10-00	MONTEREY MINE LINE SAWYERVILLE, IL FLGS AT WHITE CITY RD.	
IN SERVICE: - -	BROOKLYN DISTRICT	FILE No. R-
	CADD or DWG. No. BKUP11343.09	SHEET No. 9 of 13

REVISION INITIALS

PROPERTY
NORFOLK SOUTHERN RAILWAY CO.

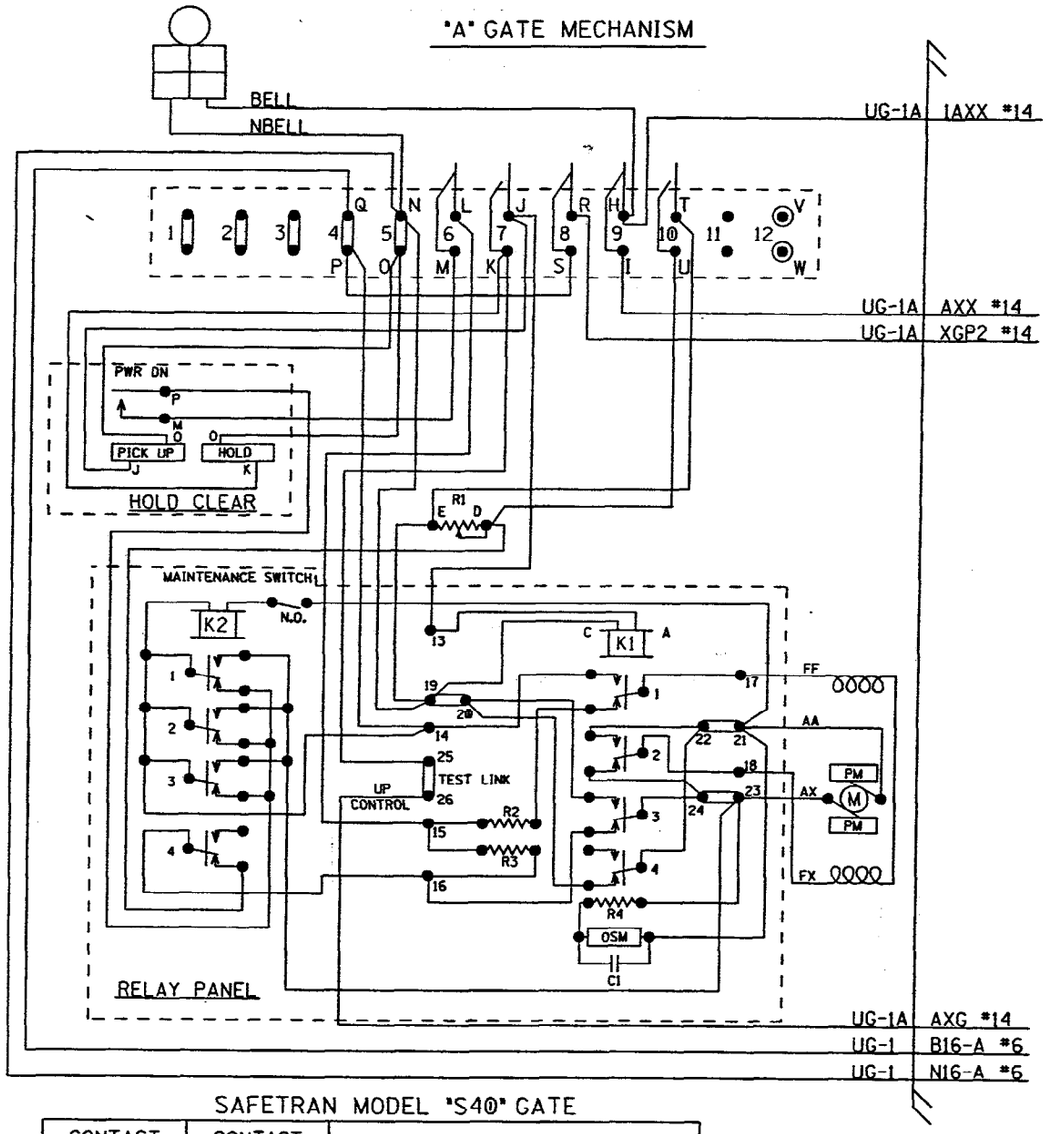

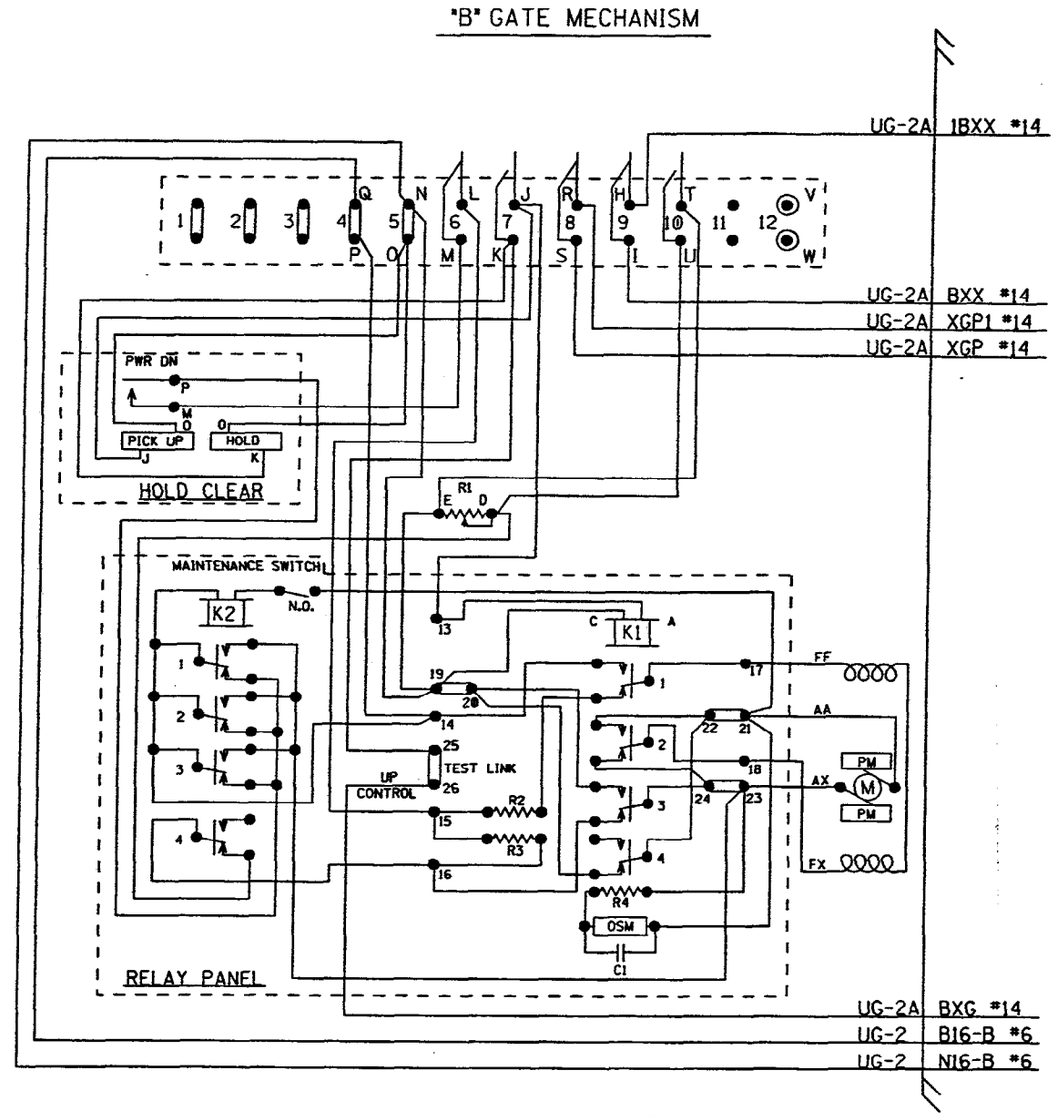

SAFETRAN MODEL "S40" GATE

CONTACT SPACE	CONTACT CLOSED AT	FUNCTION OF CONTACT
(6) L-M	45°-90°	POWER DOWN CONTROL
(7) J-K	0°-89°	POWER UP CONTROL
(8) R-S	83°-90°	FLASHING LGT. CONTROL
(9) H-I	5°-90°	BELL CONTROL
(10) T-U	0°-5°	HORIZONTAL SNUB

BELL IS TO OPERATE FROM 90 TO 5 DEGREES WHILE GATE IS DESCENDING.
BELL IS NOT TO OPERATE WHILE GATE IS ASCENDING.
SSCC MODULE 90983 (LEVEL "G" AND LATER) SHOULD HAVE BELL ON/OFF PINS SHORTED IN "OFF" POSITION TO ACCOMPLISH THE ABOVE.
SEE SAFETRAN SSCC MANUAL FOR DETAILS.

MODEL "S40" GATE MECHANISMS

DESIGNED BY: CWO 04-07-00	NORFOLK SOUTHERN	
DRAWN BY: SSC 04-07-00	OFFICE OF ASS'T. VICE PRESIDENT COMM. & SIGNAL, ATLANTA, GA.	M.P.: UP-113.43
CHECKED BY: NT 04-10-00	MONTEREY MINE LINE SAWYERVILLE, IL FLGS AT WHITE CITY RD.	
IN SERVICE: - -	BROOKLYN DISTRICT	FILE No. R-
	CADD or DWG. No. BKUP11343.10	SHEET No. 10 of 13

REVISION INITIALS

PROPERTY
NORFOLK SOUTHERN RAILWAY CO.

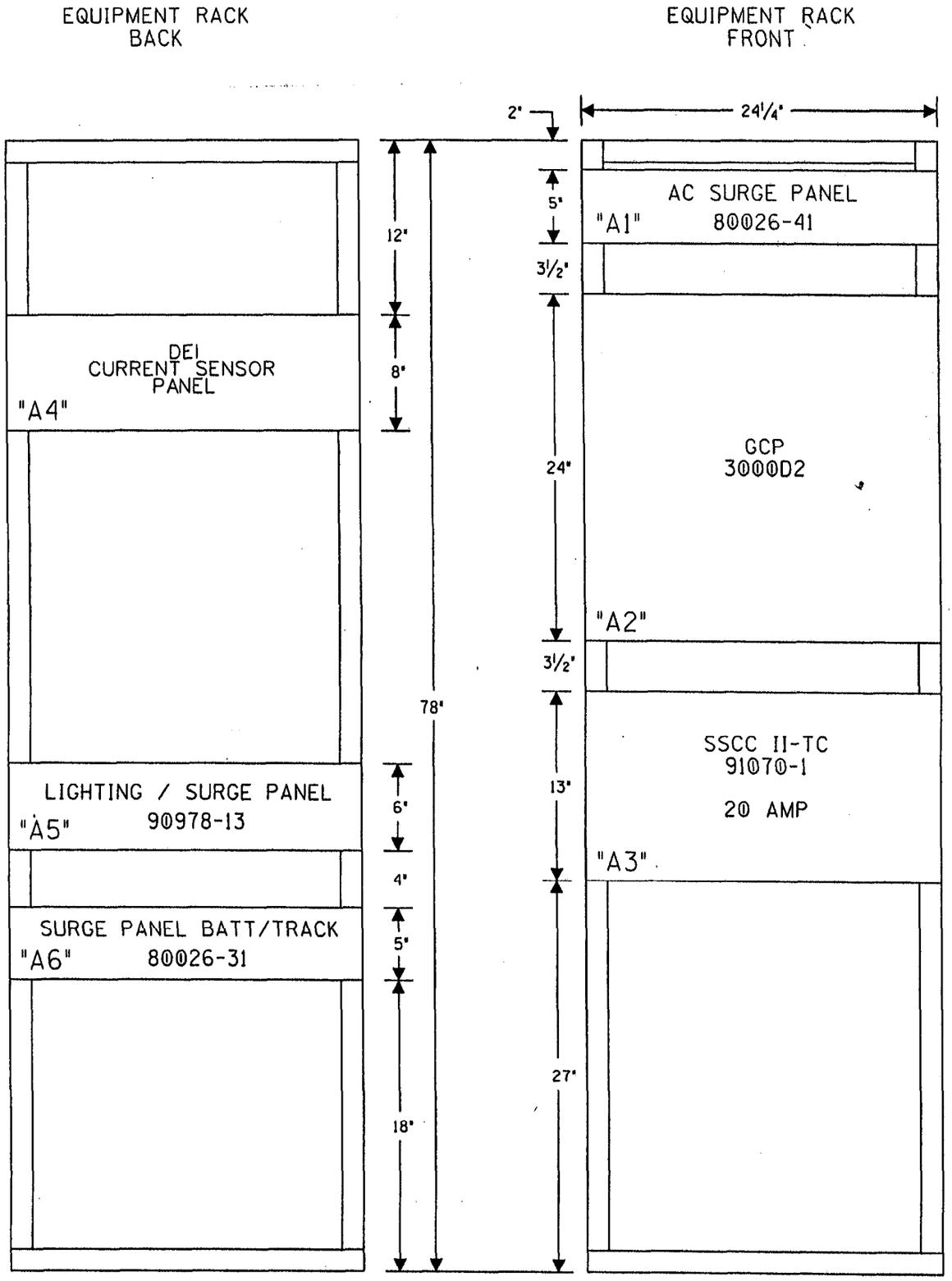

RACK PLACEMENT

REVISION INITIALS	
PROPERTY	NORFOLK SOUTHERN RAILWAY CO.
DESIGNED BY:	CWO 04-07-00
DRAWN BY:	SSC 04-07-00
CHECKED BY:	NT 04-10-00
IN SERVICE:	- -
NORFOLK SOUTHERN	
OFFICE OF ASS'T. VICE PRESIDENT COMM. & SIGNAL, ATLANTA, GA.	M.P.: UP-113.43
MONTEREY MINE LINE SAWYERVILLE, IL FLGS AT WHITE CITY RD.	
BROOKLYN DISTRICT	FILE No. R-
CADD or DWG. No. BKUP113.43.11	SHEET No. 11 of 13

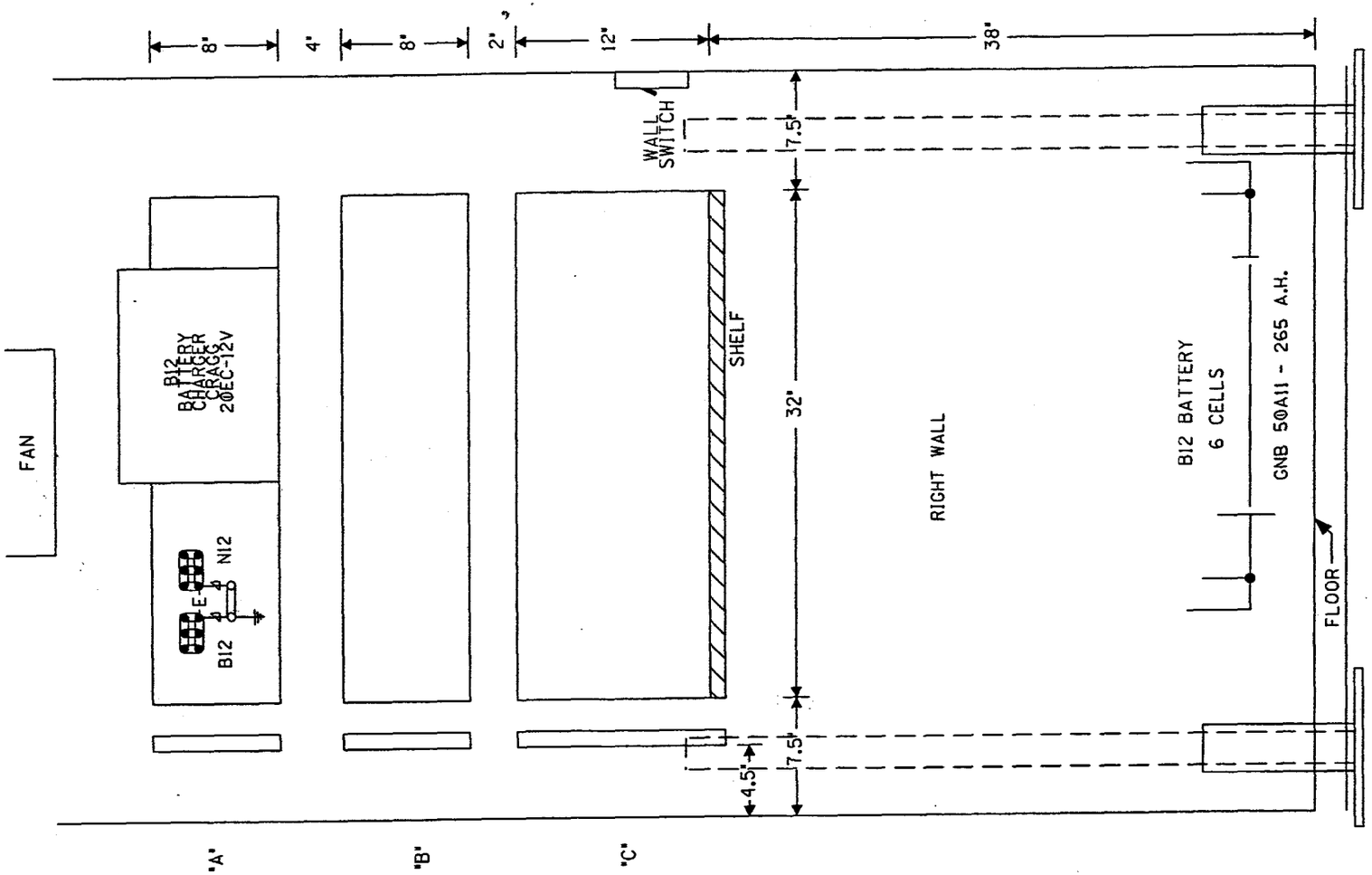

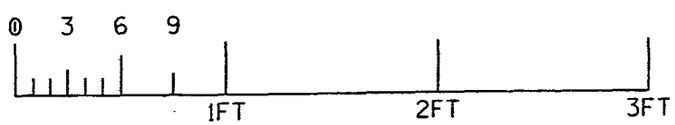

4' X 6' HOUSE (RIGHT SIDE)

DESIGNED BY: CWO 04-07-00	NORFOLK SOUTHERN
DRAWN BY: SSC 04-07-00	OFFICE OF ASS'T. VICE PRESIDENT COMM. & SIGNAL, ATLANTA, GA. — M.P.: UP-113.43
CHECKED BY: NT 04-10-00	MONTEREY MINE LINE SAWYERVILLE, IL FLGS AT WHITE CITY RD.
IN SERVICE: - -	BROOKLYN DISTRICT — FILE No. R-
	CADD or DWG. No. BKUP11343.12 — SHEET No. 12 of 13

REVISION INITIALS

PROPERTY
NORFOLK SOUTHERN RAILWAY CO.

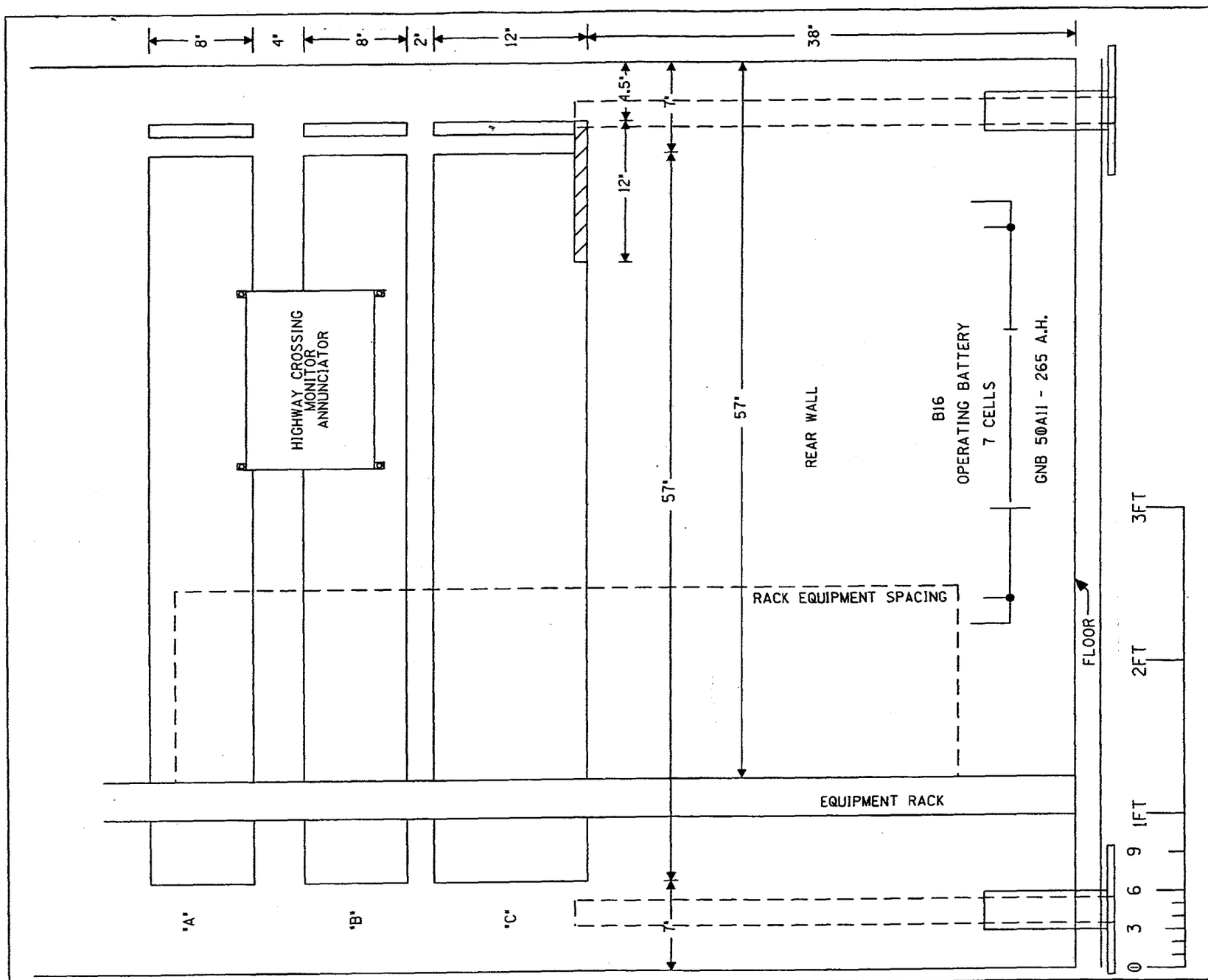

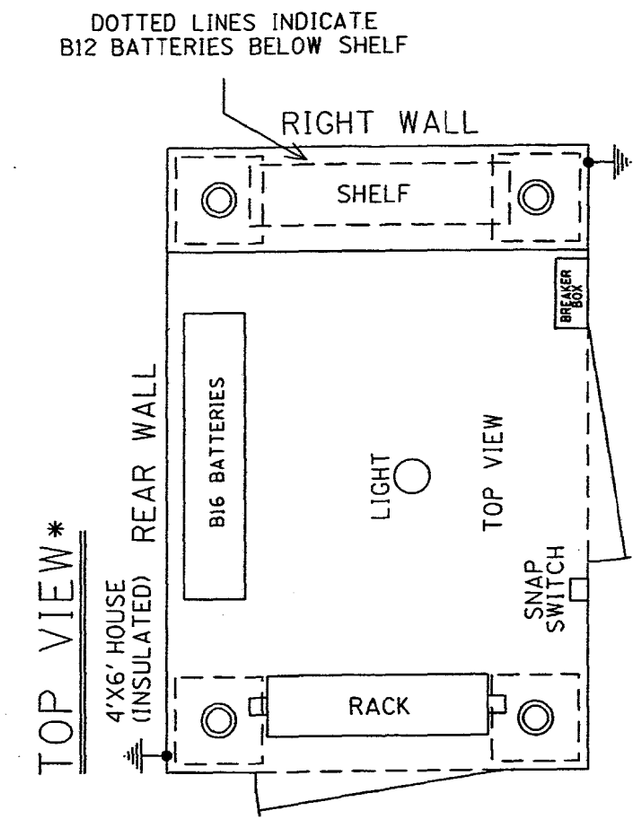

(4) ADJUSTABLE PIERS - 3" O.D. X 48" LONG WITH 12" X 12" PLATE ON BOTTOM, SLEEVE 3.5" X 6" ABOVE FLOOR, SELF DRILLED WITH 4" HOLE TO PERMIT SHIPPING

* - ½ SCALE

4' X 6' HOUSE (REAR & TOP VIEW)

DESIGNED BY: CWO 04-07-00	NORFOLK SOUTHERN	
DRAWN BY: SSC 04-07-00	OFFICE OF ASS'T. VICE PRESIDENT COMM. & SIGNAL, ATLANTA, GA.	M.P.: UP-113.43
CHECKED BY: NT 04-10-00	MONTEREY MINE LINE SAWYERVILLE, IL FLGS AT WHITE CITY RD.	
IN SERVICE: - -	BROOKLYN DISTRICT	FILE No. R-
	CADD or DWG. No. BKUP11343.13	SHEET No. 13 of 13

REVISION INITIALS

PROPERTY
NORFOLK SOUTHERN RAILWAY CO.