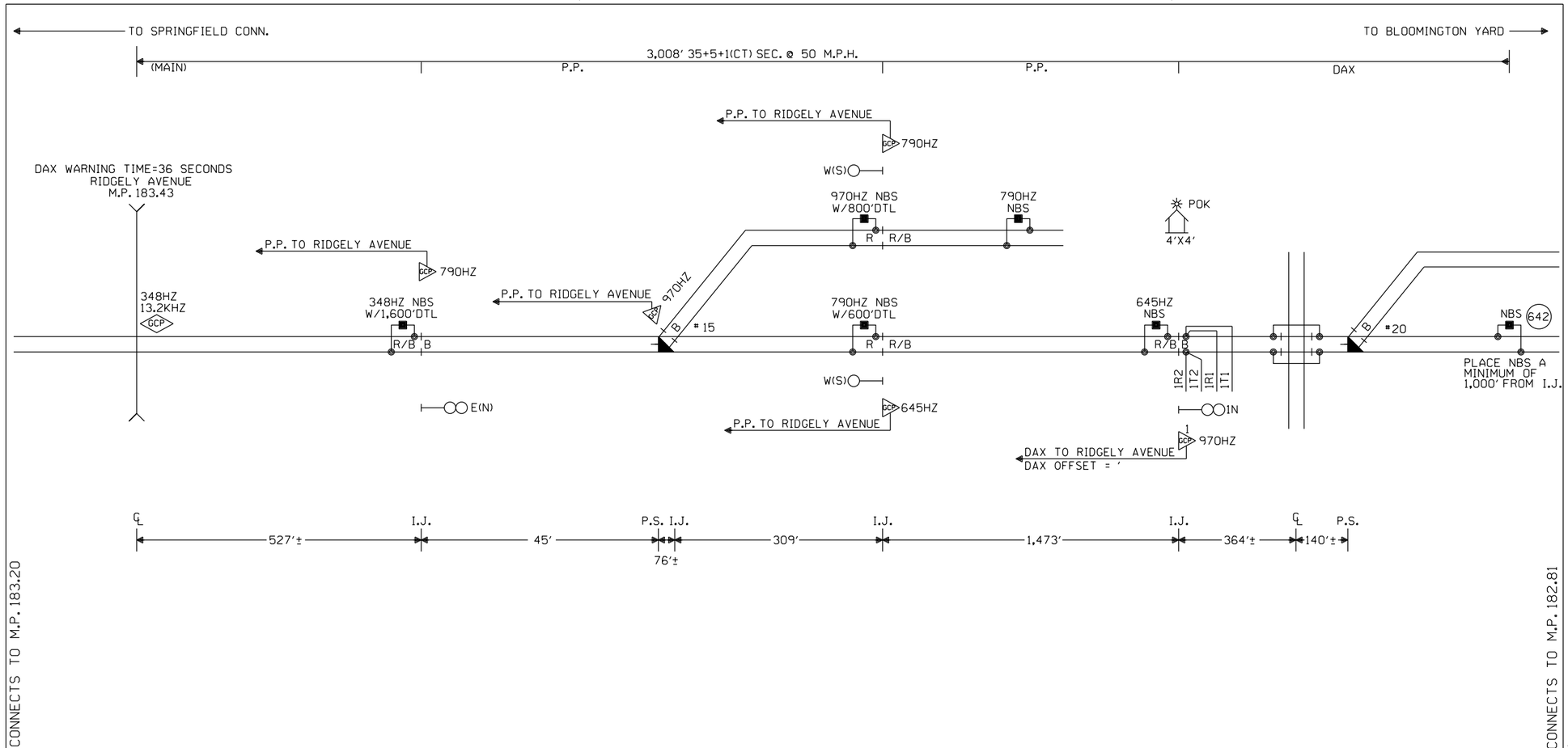

NOTES:

⊗ = TWISTED WIRES
ALL TRACK WIRES 2C. #6
INSULATED 1 TWIST PER FT.

TRANSMITTER AND RECEIVER LEADS
TO BE SEPARATED BY AT LEAST 12" IN TRENCH.
LENGTHS SHOULD NOT EXCEED MANUFACTURES
RECOMMENDATION.

ALL BUNGALOW WIRING TO BE #16 AWG FLEX
UNLESS OTHERWISE SPECIFIED EXCEPT ALL GROUND
WIRE TO BE #6 AWG FLEX OR LARGER.

REFER TO UP STANDARD DWG. FOR BUNGALOW
GROUNDING.

PORTABLE GENERATOR EXTENSION CORD
FOR 240V TO 240V IS PROVIDED AS WELL
AS A 120V TO 240V ADAPTER.

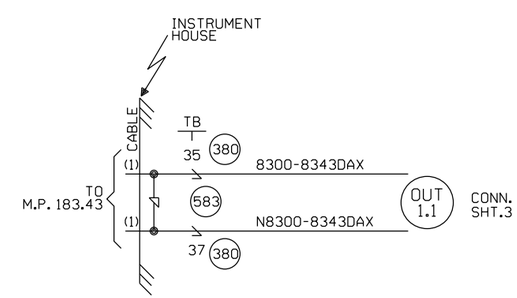

OFFSET DISTANCES
TO BE VERIFIED BY FIELD

W(S) ◄——○——► E(N)

CABLE TABULATION

CABLE #1 7C#14 U.G.B.T. HOUSE TO M.P. 183.43

NEW SHEET

					Designed: 09/23/16 ADD RIDGELY AVENUE TO SPRINGFIELD TIER 3 PHASE 2 SCOPE Rec*: WO*: 14052 IS: NBT / / / NST/JVJ	MODIFICATION LEVEL		CIRCUIT MODIFICATIONS ARE NOT TO BE MADE WITHOUT AUTHORITY FROM THE OFFICE OF SIGNAL DESIGN	Date: 09/23/16	UNION PACIFIC RAILROAD	Sh.: 1
						O. A. LAST LEVEL CHECKED	DU		Des: NST	SPRINGFIELD, ILLINOIS REMOTE LOCATION SPRINGFIELD SUBDIVISION	DOT 000000R
						LAST LEVEL MOD THIS TYPICAL	DU		Chk: NBT		MP: 183.00
						LAST LEVEL BY DESIGNER	DU		AFE: 14052	Office of AVP Engineering - Signal Omaha, Nebraska	ID: CSL18300.1X
						CHANGED FROM TYPICAL?	Y				
						REV 01.24.11 4K REMOTE.1					

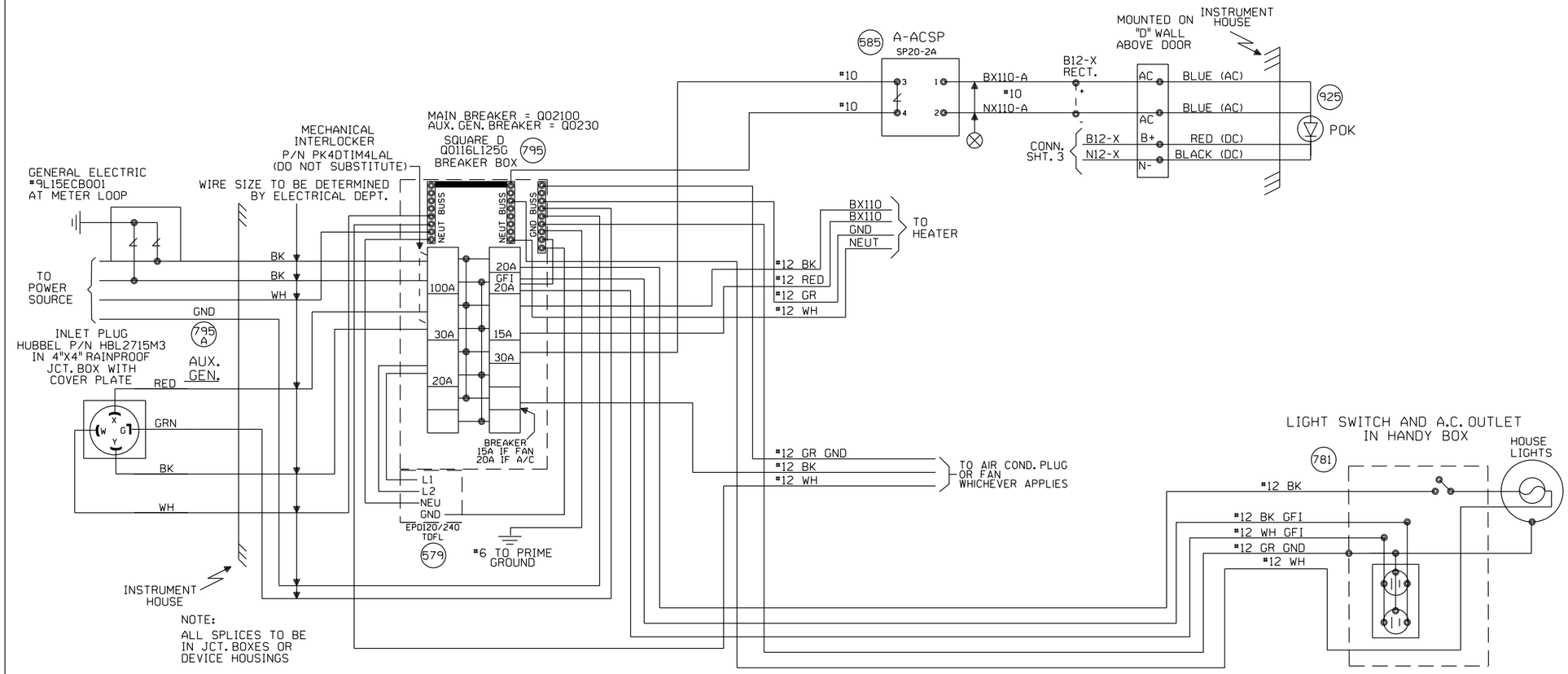

NOTE:
ALL SPLICES TO BE IN JCT. BOXES OR DEVICE HOUSINGS

NEW SHEET

Designed: 09/23/16	MODIFICATION LEVEL		CIRCUIT MODIFICATIONS ARE NOT TO BE MADE WITHOUT AUTHORITY FROM THE OFFICE OF SIGNAL DESIGN	Date: 09/23/16	UNION PACIFIC RAILROAD
ADD RIDGELY AVENUE TO SPRINGFIELD TIER 3 PHASE 2 SCOPE	Q.A. LAST LEVEL CHECKED	DU		Des: NST	SPRINGFIELD, ILLINOIS REMOTE LOCATION SPRINGFIELD SUBDIVISION
	LAST LEVEL MOD THIS TYPICAL	DU		Chk: NBT	
	LAST LEVEL BY DESIGNER	DU			
Rec*: WO*: 14052 IS: NBT / / NST/JVJ	CHANGED FROM TYPICAL?	Y		AFE: 14052	Office of AVP Engineering - Signal Omaha, Nebraska
	REV 01.24.11 4K SEARAC.2				

Sh.:	2
DOT	000000R
MP:	183.00
ID:	CSL18300.2X

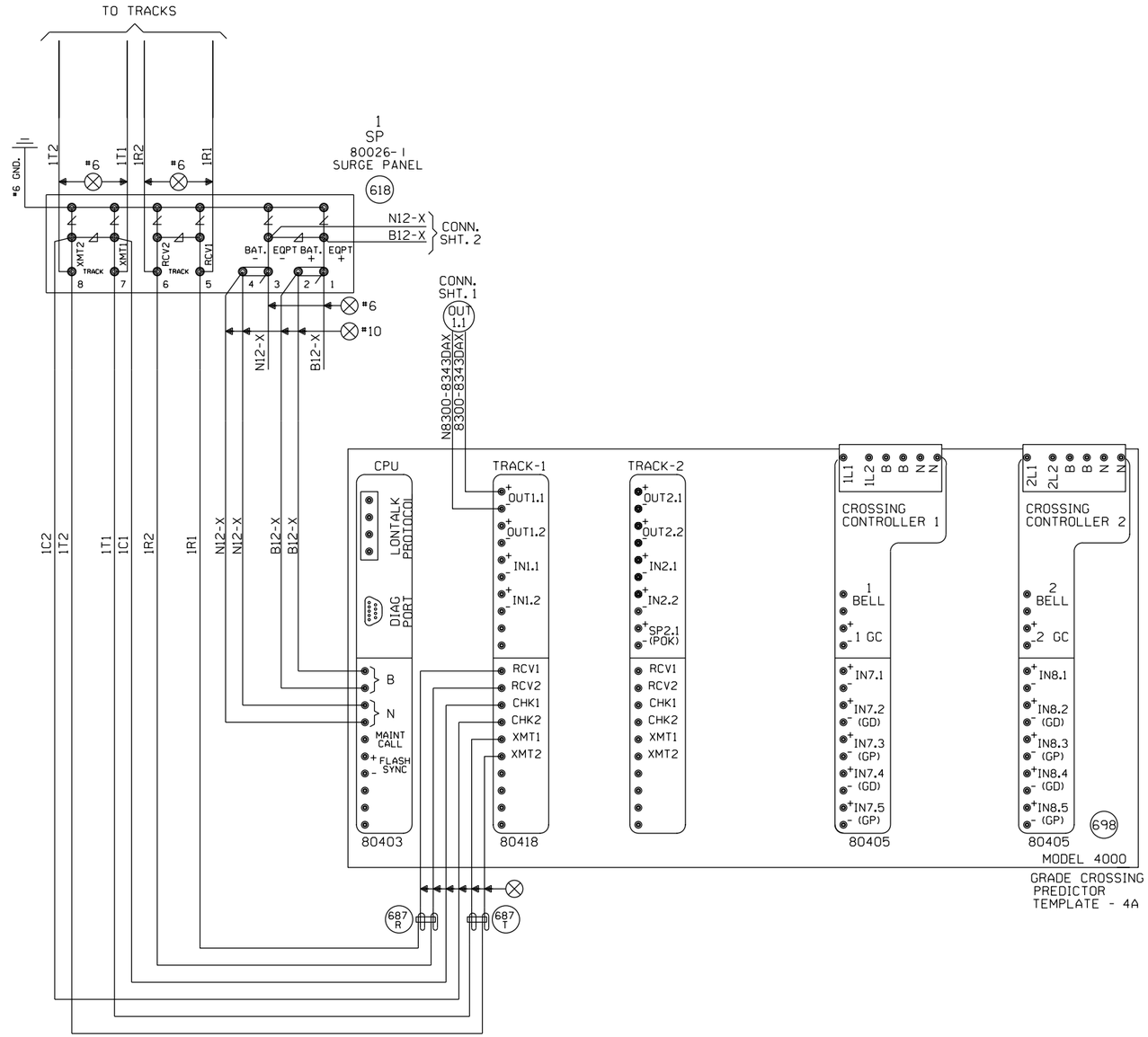

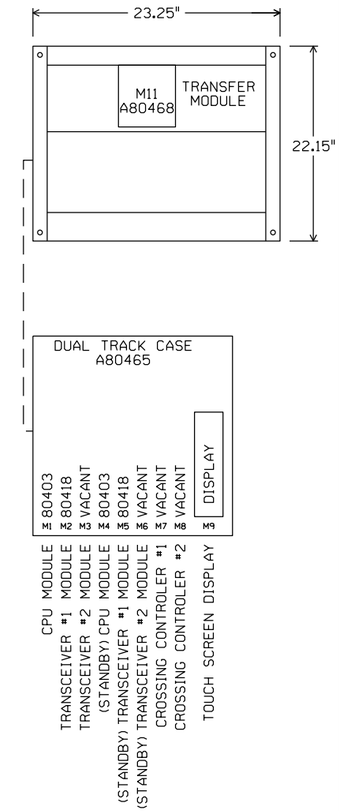

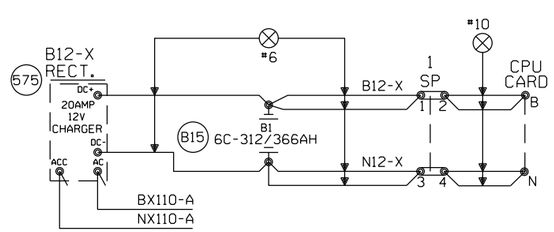

"Mf" FREQUENCY (HZ)	MAXIMUM TRANSMIT WIRE LENGTH (FEET)
86	100
114	125
156	150
211	200
285-970	250

NOTE:
EACH TRANSMITTER TO RAIL WIRE FROM XMT1 AND XMT2 MUST NOT EXCEED THE MAXIMUM LENGTH SPECIFIED IN THE TABLE SHOWN. THE RECEIVER WIRE LENGTH IS NOT CRITICAL. DOES NOT APPLY TO 6 TRACK WIRE APPLICATION.

NEW SHEET

Designed: 09/23/16
ADD RIDGELY AVENUE TO SPRINGFIELD TIER 3 PHASE 2 SCOPE
Rec'd: WO#: 14052
IS: NBT / NST/JVJ

MODIFICATION LEVEL	
D.A. LAST LEVEL CHECKED	DU
LAST LEVEL MOD THIS TYPICAL	DU
LAST LEVEL BY DESIGNER	DU
CHANGED FROM TYPICAL? REV 01.24.11 4K 2TKGF.3	Y

CIRCUIT MODIFICATIONS ARE NOT TO BE MADE WITHOUT AUTHORITY FROM THE OFFICE OF SIGNAL DESIGN

Date: 09/23/16
Des: NST
Chk: NBT
AFE: 14052

UNION PACIFIC RAILROAD
SPRINGFIELD, ILLINOIS
REMOTE LOCATION
SPRINGFIELD SUBDIVISION
Office of AVP Engineering - Signal Omaha, Nebraska

Sh.: 3
DOT 000000R
MP: 183.00
ID: CSL18300.3X

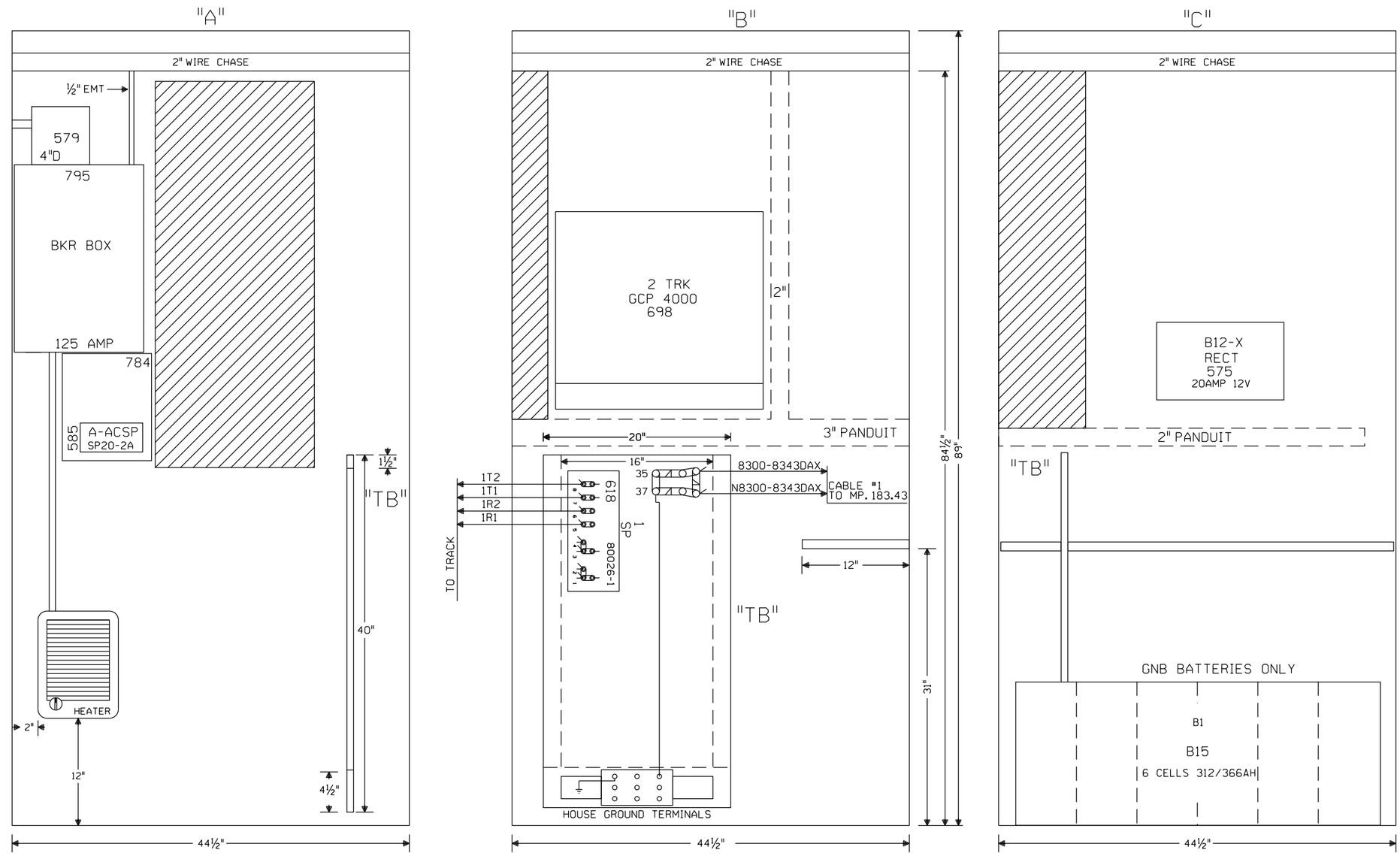

NOTE: ALL DIMENSIONS SHOWN ARE APPROXIMATE.

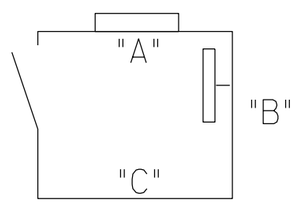

4X4 HOUSE WITH BLOWER U.P. PART#520-2528

NEW SHEET

Designed: 09/23/16

ADD RIDGELY AVENUE TO SPRINGFIELD TIER 3 PHASE 2 SCOPE

Rec'd: WO#: 14052
IS: NBT / / NST/JVJ

MODIFICATION LEVEL	
O.A. LAST LEVEL CHECKED	DU
LAST LEVEL MOD THIS TYPICAL	DU
LAST LEVEL BY DESIGNER	DU
CHANGED FROM TYPICAL?	Y

rev 01.24.11 4K REMOTE.5

CIRCUIT MODIFICATIONS ARE NOT TO BE MADE WITHOUT AUTHORITY FROM THE OFFICE OF SIGNAL DESIGN

Date: 09/23/16
Des: NST
Chk: NBT
AFE: 14052

UNION PACIFIC RAILROAD

SPRINGFIELD, ILLINOIS
REMOTE LOCATION
SPRINGFIELD SUBDIVISION

Office of AVP Engineering - Signal Omaha, Nebraska

Sh.: 4
DOT 000000R
MP: 183.00
ID: CSL18300.4X