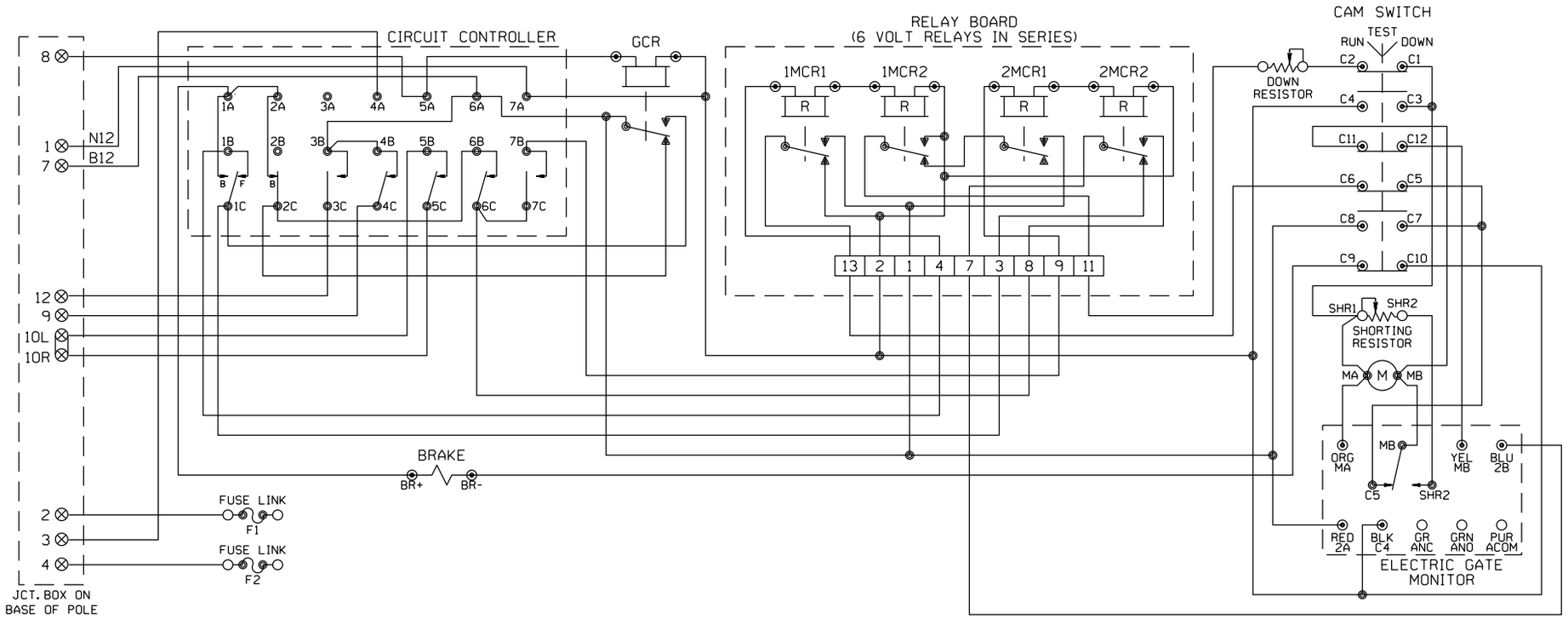

FOR WIRING GATES "C" AND "D"

WCH 3597 EXIT GATE

CONTACT	CLOSED	FUNCTION
1F	90-2	POWER DOWN
1B	2-0	ENGAGE BRAKE DOWN
2B	86-90	ENGAGE BRAKE UP
3	0-10	GATE DOWN
4	82-90	GATE CLEAR
5	10-90	BELL
6	60-90	POWER UP
7	0-75	DROP POWER UP

MECHANISM SHOWN IN CLEAR POSITION

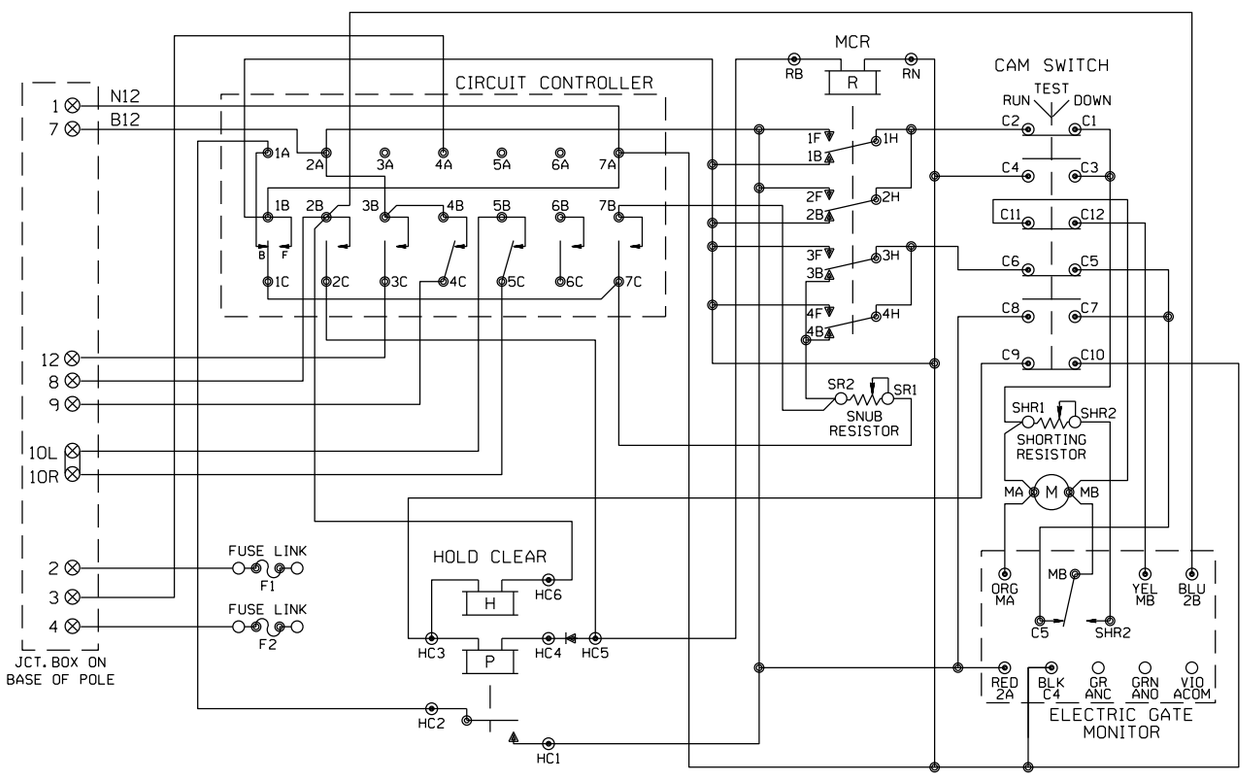

FOR WIRING GATES "A" AND "B"

WCH 3597 ENTRANCE GATE

CONTACT	CLOSED	FUNCTION
1B	75-90	POWER DOWN
1F	0-70	SNUB DOWN
2	0-86	POWER UP
3	0-10	GATE DOWN
4	82-90	GATE CLEAR
5	10-90	BELL
6	SPARE	SPARE
7	0-10	SNUB

MECHANISM SHOWN IN CLEAR POSITION

LAWNDALE, ILLINOIS
LINCOLN STREET
M.P. 150.15
SPRINGFIELD SUBDIVISION
D.O.T.#290 978H

REV. 6-20-08
UPGRADED CROSSING PROTECTION FOR THE HIGH SPEED RAIL PROJ. FROM MAZONIA TO SPRINGFIELD
W.O. #00183
REC. #15265
3-8-06 JJF
CM/WITT/WITT/JNM

MODIFICATION LEVEL	
Q.A. LAST LEVEL CHK'D.	DA
LAST LEVEL MOD. THIS TYP.	CZ
LAST LEVEL BY DESIGNER.	DD
CHANGED FROM TYP.? Y/N	Y

CIRCUIT MODIFICATIONS ARE NOT TO BE MADE WITHOUT AUTHORITY FROM THE OFFICE OF SIGNAL DESIGN

DES: WITT.IND.
DIG: WITT.IND.
CHK: J.J.F.
A.F.E. 00183
ID= CSL15015.8X

UNION PACIFIC RAILROAD
BLOOMINGTON, ILLINOIS TO VALLEY JCT., ILLINOIS
C.T.C. CIRCUITS
Office of AVP Engineering-Signal OMAHA NEBR.

DATE 4-1-02
SHEET 8
DWG 150.15
RTE-CSL

(REV. 7-9-00) (GWIRING.DGN)

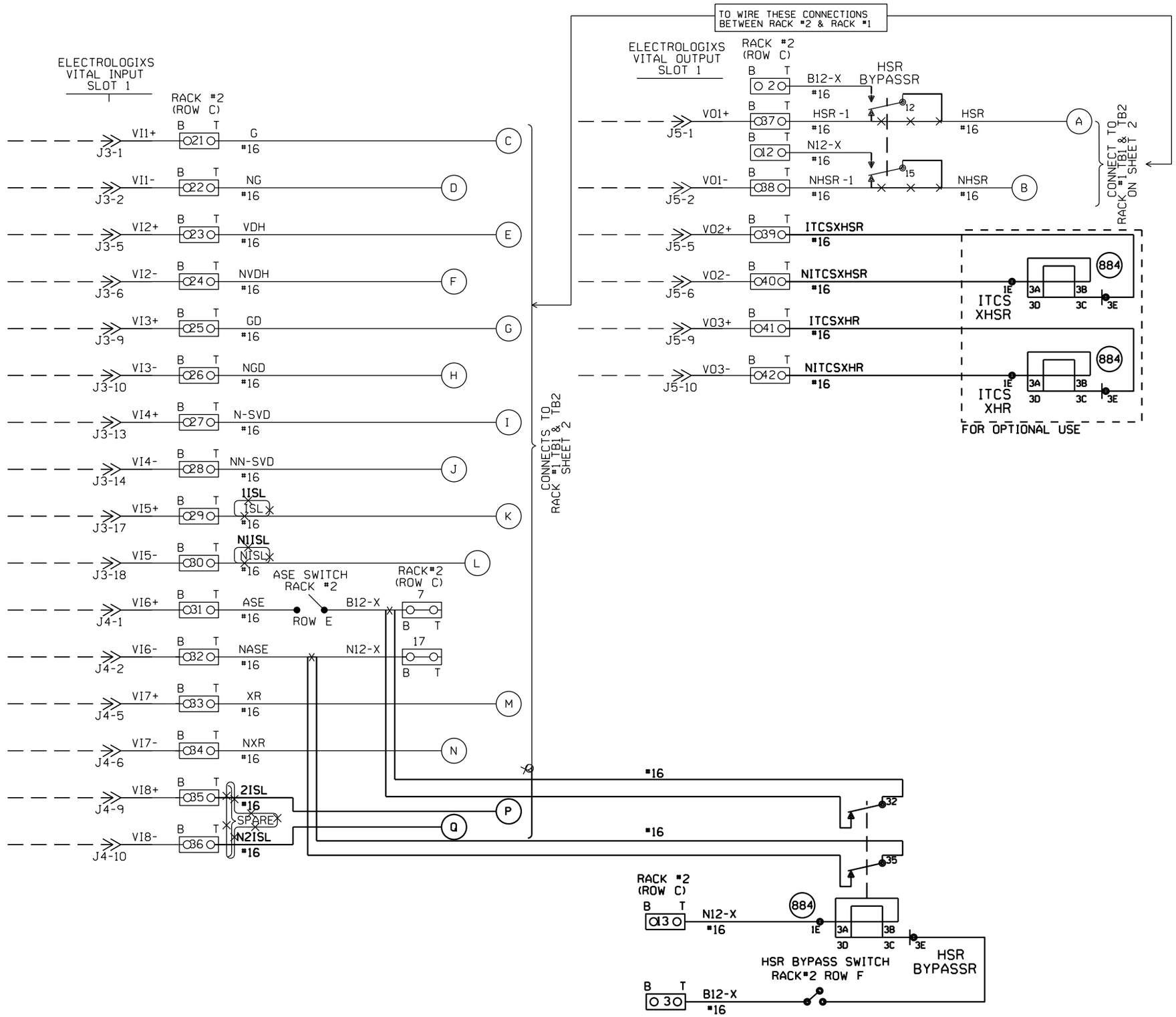

NOTES:

1. INPUT WIRES, OUTPUT WIRES, POWER WIRES, PUT IN SEPARATE BUNDLES.
2. ALL WIRES #16 UNLESS NOTED.
3. O??O 2 POSITION WAGO BLOCK.

~~NEW SHEET~~

——— = IN
—×—×— = OUT

						Designed: 10/11/12 TIER 3 PHASE 4 M.P.161.00 TO M.P.147.00 UPGRADE XINGS AND CP'S FOR HIGH SPEED RAIL Rec#: WO#: 22821 IS: MWK/ / /NST/MJF	02-24-09 INSTALL MONITOR RACK FOR XINGS W.O. 87933 MAS	CIRCUIT MODIFICATIONS ARE NOT TO BE MADE WITHOUT AUTHORITY FROM THE OFFICE OF SIGNAL DESIGN	Date: 09-25-08 Des: CRK Chk: AFE: 87933	UNION PACIFIC RAILROAD LAWNDALE, ILLINOIS LINCOLN STREET SPRINGFIELD SUBDIVISION Office of AVP Engineering-Signal Omaha, Nebraska	Sh.: 9 DOT 290978H MP: 150.15 ID: CSL15015.9X

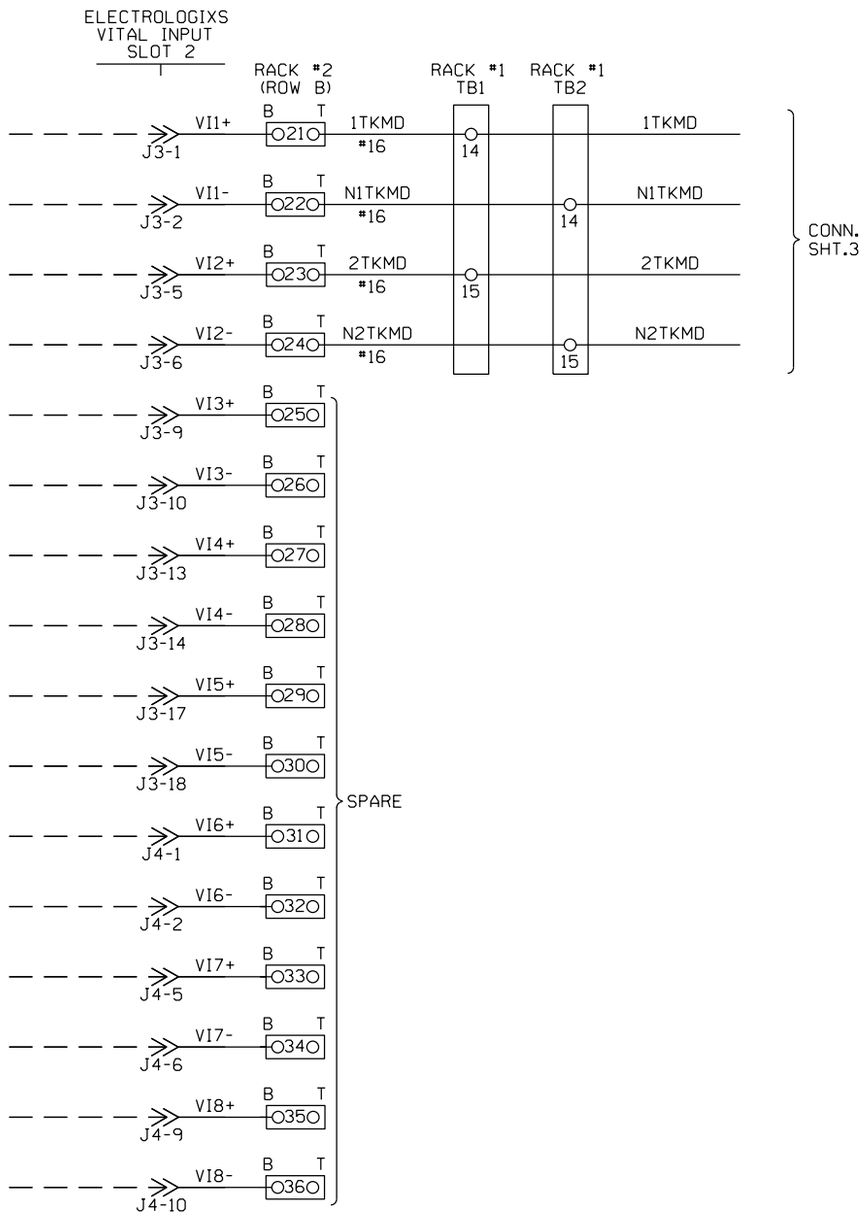

NOTES:

1. INPUT WIRES, OUTPUT WIRES, POWER WIRES, PUT IN SEPARATE BUNDLES.
2. ALL WIRES #16 UNLESS NOTED.
3. O?? O 2 POSITION WAGO BLOCK.

NEW SHEET

							Designed: 10/11/12 TIER 3 PHASE 4 M.P.161.00 TO M.P.147.00 UPGRADE XINGS AND CP'S FOR HIGH SPEED RAIL Rec#: WO#: 22821 IS: / / / /NST/MJF	CIRCUIT MODIFICATIONS ARE NOT TO BE MADE WITHOUT AUTHORITY FROM THE OFFICE OF SIGNAL DESIGN	Date: 10/11/12 Des: NST Chk: AFE: 22821	UNION PACIFIC RAILROAD LAWNDALE, ILLINOIS LINCOLN STREET SPRINGFIELD SUBDIVISION Office of AVP Engineering - Signal Omaha, Nebraska	Sh.: 9A DOT 290978H MP: 150.07 ID: CSL15007.9AX

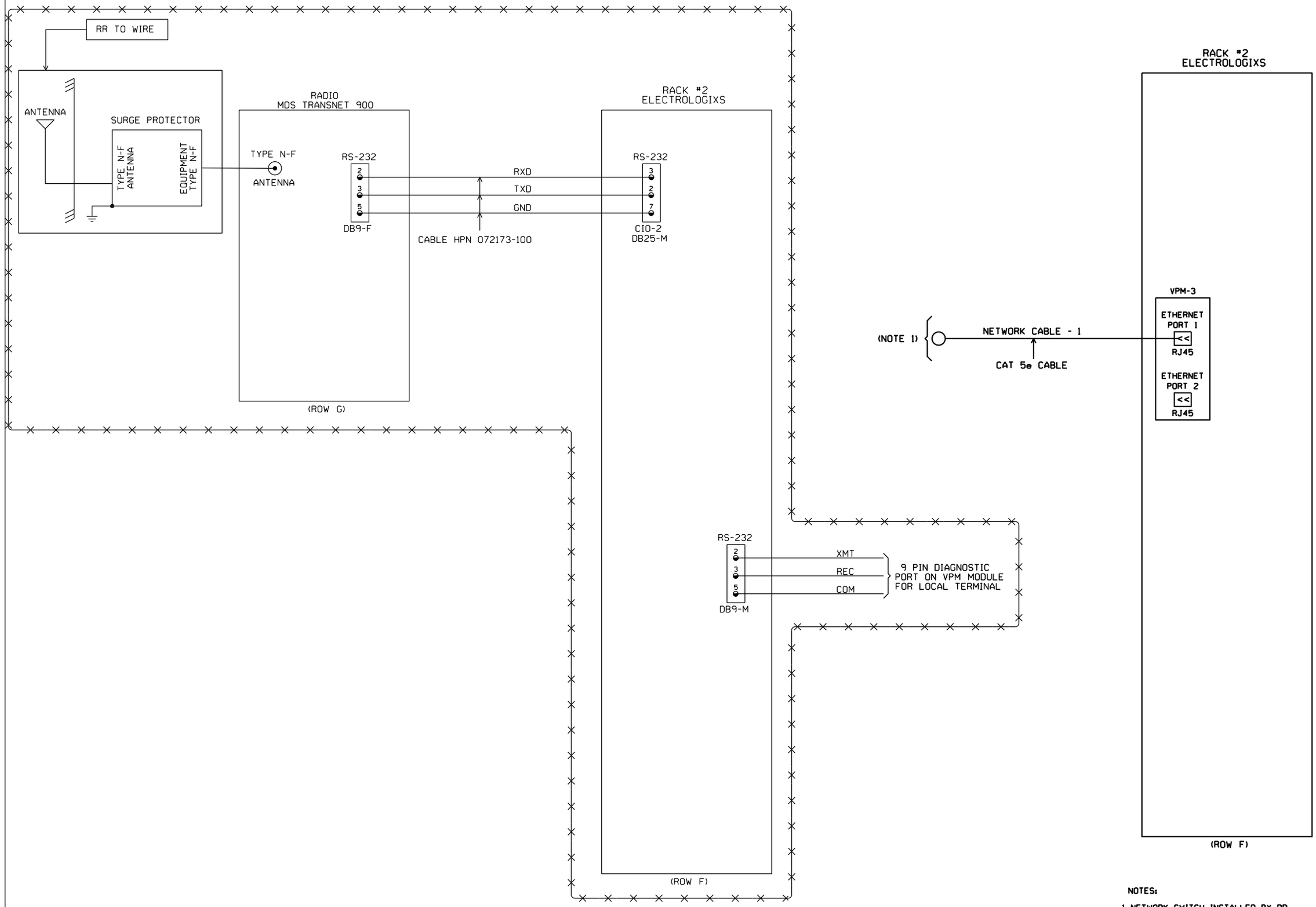

NOTES:

1. NETWORK SWITCH INSTALLED BY RR.

~~NEW SHEET~~

= IN
= OUT

						Designed: 10/11/12 TIER 3 PHASE 4 M.P.161.00 TO M.P.147.00 UPGRADE XINGS AND CP'S FOR HIGH SPEED RAIL Rec#: WO#: 22821 IS: MWK/ / /NST/MJF	02-24-09 INSTALL MONITOR RACK FOR XINGS W.O. 87933 MAS	CIRCUIT MODIFICATIONS ARE NOT TO BE MADE WITHOUT AUTHORITY FROM THE OFFICE OF SIGNAL DESIGN	Date: 09-25-08 Des: CRK Chk: AFE: 87933	UNION PACIFIC RAILROAD LAWNDALE, ILLINOIS LINCOLN STREET SPRINGFIELD SUBDIVISION Office of AVP Engineering-Signal Omaha, Nebraska	Sh.: 9A 9B DOT 290978H MP: 150.15 ID: CSL15015 9AX 9BX

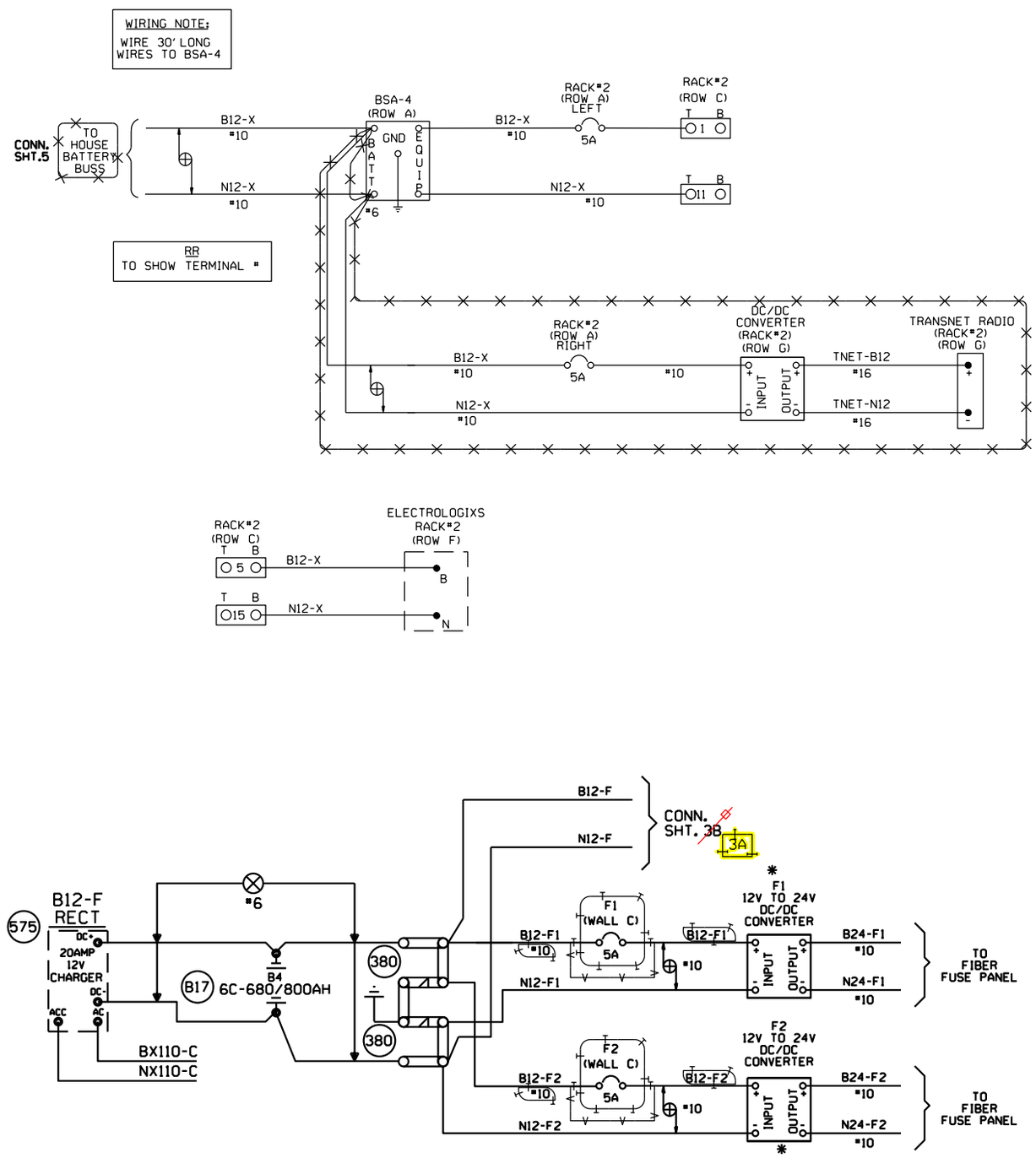

Designed: 9/28/16 REVISE ROAD ANGLE AND LOOPS AT LINCOLN STREET M.P. 150.07 Rec#: IS: WO#: 22821 /NBT /NST/JVJ	Designed: 03/08/15 TIER 3 PHASE 4 M.P. 161.00 TO M.P. 147.00 HSR SCOPE CHANGE Rec#: IS: WO#: 22821 MWK/ /NST/JVJ	Designed: 10/11/12 TIER 3 PHASE 4 M.P.161.00 TO M.P.147.00 UPGRADE XINGS AND CP'S FOR HIGH SPEED RAIL Rec#: IS: WO#: 22821 MWK/ /NST/MJF	02-24-09 INSTALL MONITOR RACK FOR XINGS W.O. 87933 MAS	CIRCUIT MODIFICATIONS ARE NOT TO BE MADE WITHOUT AUTHORITY FROM THE OFFICE OF SIGNAL DESIGN	Date: 09-25-08 Des: CRK Chk: AFE: 87933	UNION PACIFIC RAILROAD LAWNDALE, ILLINOIS LINCOLN STREET SPRINGFIELD SUBDIVISION Office of AVP Engineering-Signal Omaha, Nebraska	Sh.: 9B 9C DOT 290978H MP: 150.15 ID: CSL15015 9BX 9CX

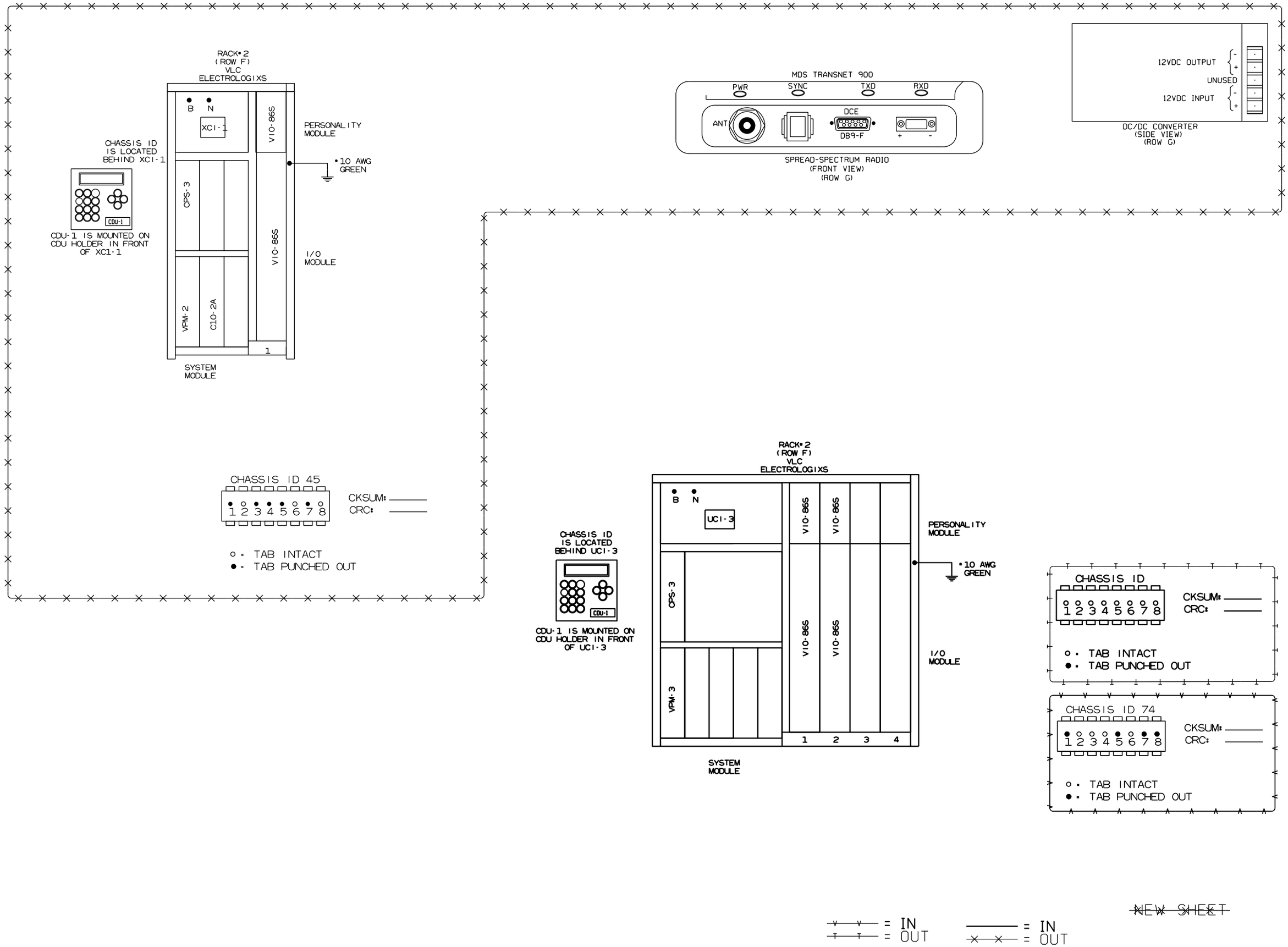

				Designed: 03/06/15 TIER 3 PHASE 4 M.P. 161.00 TO M.P. 147.00 HSR SCOPE CHANGE Rec#: WO#: 22821 IS: MWK/ /NST/JVJ	Designed: 10/11/12 TIER 3 PHASE 4 M.P.161.00 TO M.P.147.00 UPGRADE XINGS AND CP'S FOR HIGH SPEED RAIL Rec#: WO#: 22821 IS: MWK/ /NST/MJF	02-24-09 INSTALL MONITOR RACK FOR XINGS W.O. 87933 MAS	CIRCUIT MODIFICATIONS ARE NOT TO BE MADE WITHOUT AUTHORITY FROM THE OFFICE OF SIGNAL DESIGN	Date: 09-25-08 Des: CRK Chk: AFE: 87933	UNION PACIFIC RAILROAD LAWNDALE, ILLINOIS LINCOLN STREET SPRINGFIELD SUBDIVISION Office of AVP Engineering - Signal Omaha, Nebraska	Sh.: 9C 9D DOT 290978H MP: 150.15 ID: CSL15007 9C 9DX

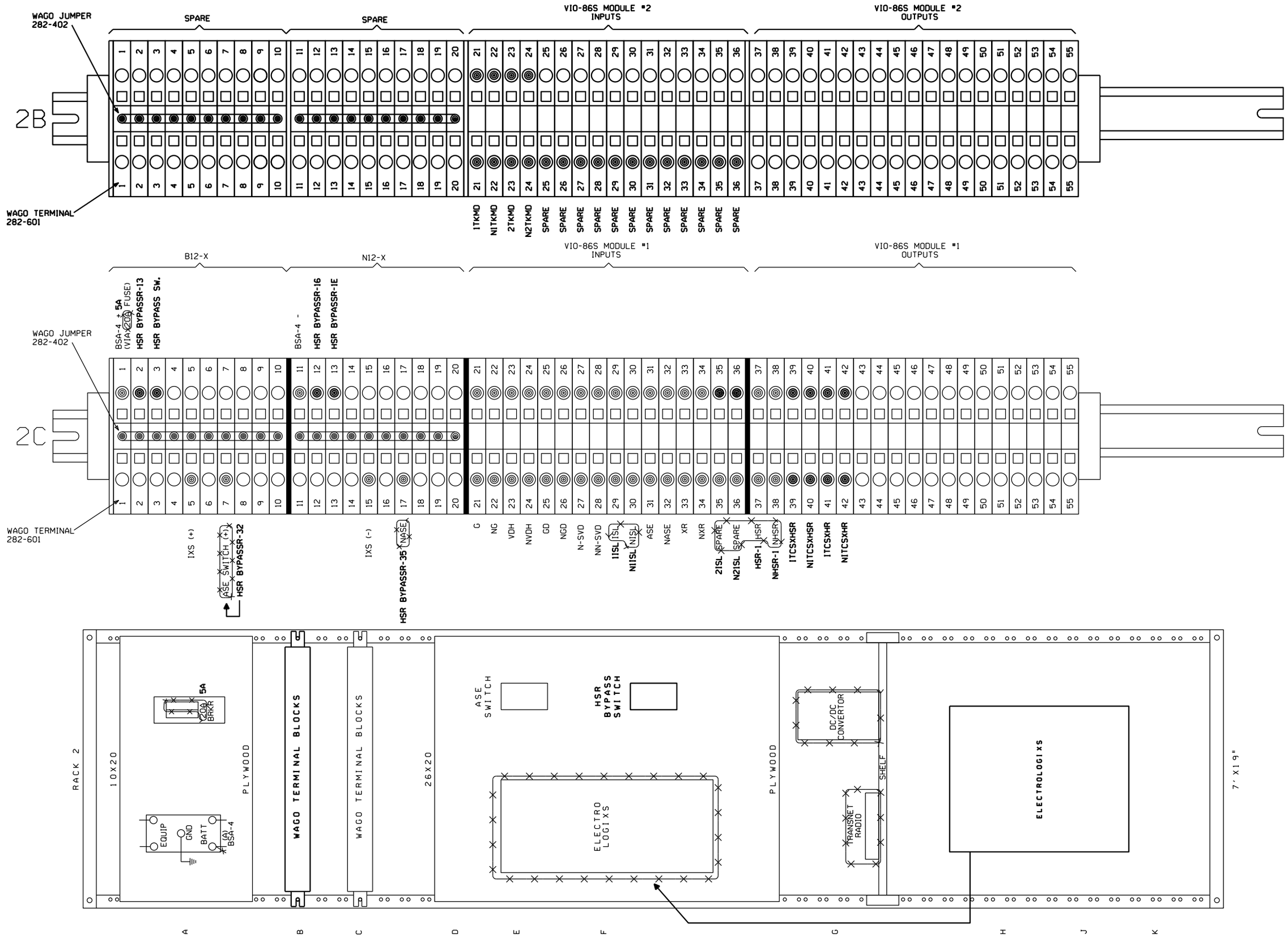

						Designed: 10/11/12 TIER 3 PHASE 4 M.P.161.00 TO M.P.147.00 UPGRADE XINGS AND CP'S FOR HIGH SPEED RAIL Rec#: WO#: 22821 IS: MWK/ / /NST/MJF	02-24-09 INSTALL MONITOR RACK FOR XINGS W.O. 87933 MAS	CIRCUIT MODIFICATIONS ARE NOT TO BE MADE WITHOUT AUTHORITY FROM THE OFFICE OF SIGNAL DESIGN	Date: 09-25-08 Des: CRK Chk: AFE: 87933	UNION PACIFIC RAILROAD LAWNDALE, ILLINOIS LINCOLN STREET SPRINGFIELD SUBDIVISION Office of AVP Engineering-Signal Omaha, Nebraska	Sh.: 9D 9E DOT 290978H MP: 150.15 ID: CSL15015 9DX 9EX

GATE PARAMETERS

GATE	1	2	3	4	5	6	7	8
GATE TYPE	ENTRANCE	ENTRANCE	EXIT	EXIT	INT	INT	NONE•	NONE•
GATE DIRECTION	SOUTH	NORTH	SOUTH	NORTH	S	N	S/N	S/N
VERTICAL CHATTER TIME	00.0	00.0	00.0	00.0	00.0	00.0	00.0	00.0
HORIZONTAL CHATTER TIME	01.0	01.0	01.0	01.0	01.0	01.0	01.0	01.0
MAXIMUM ASCENT TIME	025	025	025	025	025	025	025	025
MAXIMUM DESCENT TIME	025	025	025	025	025	025	025	025

• GATE TYPE = "NONE" ALL OTHER PARAMETERS IGNORED

DETECTOR PARAMETERS

	(1) E-1400				(2) E-1400				(3) E-1400				(4) E-1400			
DETECTOR	1	2	3	4	5	6	7	8	9	10	11	12	13	14	15	16
DETECTOR TYPE	ENTR	ENTR	EXIT	EXIT	INT	INT	NONE	NONE	NONE	NONE	NONE	NONE	NONE	NONE	NONE	NONE
DETECTOR DIRECTION	S	N	S	N	S	N	S/N	S/N	S/N	S/N	S/N	S/N	S/N	S/N	S/N	S/N
STRETCH TIME•	01.0	01.0	01.0	01.0	01.0	01.0	01.0	01.0	01.0	01.0	01.0	01.0	01.0	01.0	01.0	01.0

• INCREASE STRETCH TIME AS NECESSARY TO MAINTAIN VEHICLE DETECTION FROM LOOP TO LOOP.
•• DETECTORS 5 - 16 DEFAULT TO "NONE" AND MUST BE CONFIGURED MANUALLY

NOTES

1. EGMS ISL1 INPUT: "AND" ISLAND INPUTS FROM ALL TRACKS. NOTE THAT WHEN THIS INPUT IS DE-ENERGIZED THE XR INPUT ON TB2, 15 & 16 MUST ALSO BE DE-ENERGIZED BEFORE THE EXIT GATES MAY BE DRIVEN DOWN.
2. EGMS ISL2 INPUT: MAY BE USED FOR STAND ALONE ISLAND INPUT. THIS INPUT IS NOT DEPENDENT UPON THE STATUS OF XR INPUT ON TB2, 15 & 16. THIS INPUT MUST BE FIELD SELECTED AND ENABLED DURING EGMS SETUP.
3. ALL WIRING TO EGMS TO BE #16 AWG FLEX.

EGMS PROGRAM INFORMATION

PROGRAM VERSION 2.1

EGMS PARAMETERS

PARAMETER	DEFAULT
PRIMARY MODE	DYNAMIC
SECONDARY MODE	TIMED
DIS ENTR DETS	NO
DELAY ON DOWN	01.0
REV DET ENABLE	NO
DYNAMIC EGCT	000
TIMED EGCT	012
XR DET DISABLE	YES
BIDIR DELAY	04.0
ENTRANCE DOWN REQ	YES
EXIT UP REQ	NO
ISL 2 ENABLE	NO
GATO ALARM DELAY	000
GATO GATE DELAY	005

SEE SHEET 10A FOR NEW EGMS PROGRAM INFORMATION

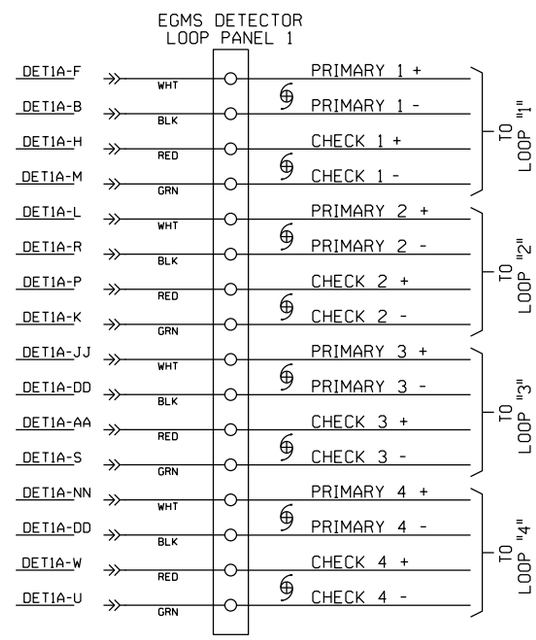

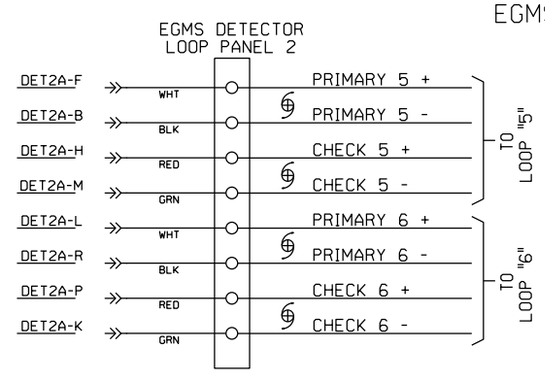

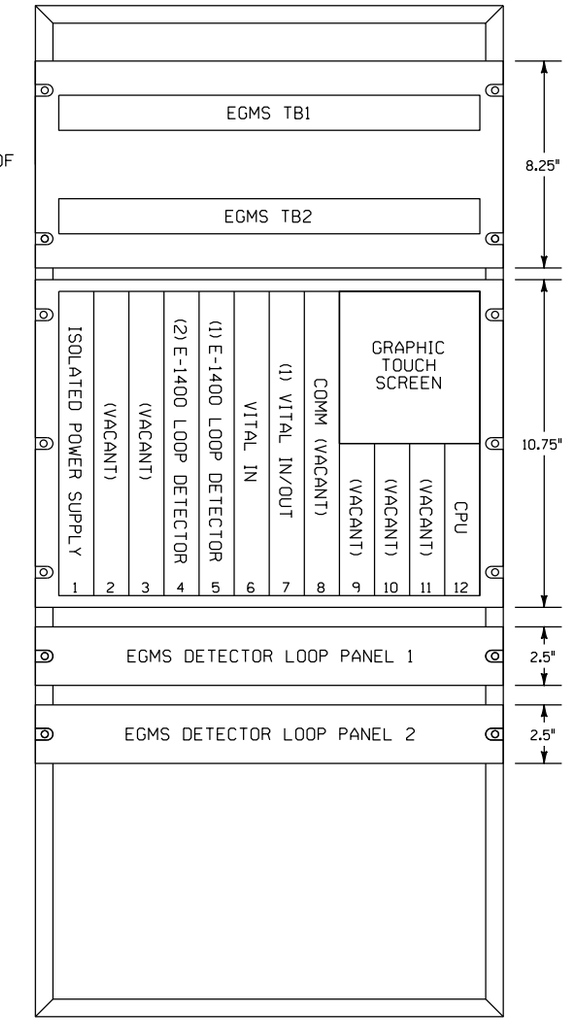

NOTES

1. E-1400 LOOP DETECTOR MODULES AND EGMS DETECTOR LOOP PANELS MAY BE REMOVED AS REQUIRED.

(1) E-1400 SETUP PARAMETERS

FUNCTION	CH. 1	CH. 2	CH. 3	CH. 4
FREQUENCY SETTING	2	4	6	8
SENSITIVIY SETTING	6•	6•	6•	6•
OPTION 1 (TEMP L DISPLAY)	OFF			
OPTION 2 (TEMP ΔL/L DISPLAY)	OFF			
OPTION 3 (NOISE FILTER)	3.00	3.00	3.00	3.00
OPTION 4 (TRACKING)	4.02	4.02	4.02	4.02
OPTION 5 (SENSITIVITY BOOST)	5.00	5.00	5.00	5.00
OPTION 6 (TEMP AUDIBLE SIGNAL)	OFF	OFF	OFF	OFF
CHECKLOOP INTERVAL	005	005	005	005
DETECTOR ID	000			
OPTION 7 (DETECTOR SYNC)	7.00			
OPTION 8 (ISL OPTION)	OFF			
OPTION 9 (SHUNT ENHANCEMENT SE)	OFF	OFF	OFF	OFF
MAIN VITAL OUTPUT DELAY	00.0	00.0	00.0	00.0
MAIN VITAL OUTPUT EXTENSION	00.0	00.0	00.0	00.0
MAIN VITAL OUTPUT MAPPING	10	20	40	80
AUX VITAL OUTPUT MAPPING	001	002	004	008
LOOP FREQUENCY (Khz)				
LOOP INDUCTANCE (MICRO HENRIES)				

SOFTWARE VERSION ___.
• FIELD VERIFY
•• OPTION #8, #9 ONLY AVAILABLE W/ E-1400 SOFTWARE VERSION 4.0 AND HIGHER

(2) E-1400 SETUP PARAMETERS

FUNCTION	CH. 1	CH. 2	CH. 3	CH. 4
FREQUENCY SETTING	2	4	6	8
SENSITIVIY SETTING	6•	6•	6•	6•
OPTION 1 (TEMP L DISPLAY)	OFF			
OPTION 2 (TEMP ΔL/L DISPLAY)	OFF			
OPTION 3 (NOISE FILTER)	3.00	3.00	3.00	3.00
OPTION 4 (TRACKING)	4.02	4.02	4.02	4.02
OPTION 5 (SENSITIVITY BOOST)	5.00	5.00	5.00	5.00
OPTION 6 (TEMP AUDIBLE SIGNAL)	OFF	OFF	OFF	OFF
CHECKLOOP INTERVAL	005	005	005	005
DETECTOR ID	000			
OPTION 7 (DETECTOR SYNC)	7.00			
OPTION 8 (ISL OPTION)	OFF			
OPTION 9 (SHUNT ENHANCEMENT SE)	OFF	OFF	OFF	OFF
MAIN VITAL OUTPUT DELAY	00.0	00.0	00.0	00.0
MAIN VITAL OUTPUT EXTENSION	00.0	00.0	00.0	00.0
MAIN VITAL OUTPUT MAPPING	10	20	40	80
AUX VITAL OUTPUT MAPPING	001	002	004	008
LOOP FREQUENCY (Khz)				
LOOP INDUCTANCE (MICRO HENRIES)				

SOFTWARE VERSION ___.
• FIELD VERIFY
•• OPTION #8, #9 ONLY AVAILABLE W/ E-1400 SOFTWARE VERSION 4.0 AND HIGHER

——— = IN
—×—×— = OUT

LAWNDALE, ILLINOIS
LINCOLN STREET
M.P. 150.15
SPRINGFIELD SUBDIVISION
D.O.T.#290-978H

REV. 6-20-08
UPGRADED CROSSING PROTECTION FOR THE HIGH SPEED RAIL PROJ. FROM MAZONIA TO SPRINGFIELD.
AFE 00183
REC# 15265
I.S. 3-8-06 JJF
JM/WITT/WITT/JNM

MODIFICATION LEVEL	
Q.A. LAST LEVEL CHK'D.	
LAST LEVEL MOD. THIS TYP.	
LAST LEVEL BY DESIGNER.	
CHANGED FROM TYP.? Y/N	

CIRCUIT MODIFICATIONS ARE NOT TO BE MADE WITHOUT AUTHORITY FROM THE OFFICE OF SIGNAL DESIGN

DES: WITT.IND.
DIG: WITT.IND.
CHK: J.J.F.
A.F.E. 00183
ID= CSL15015.10X

UNION PACIFIC RAILROAD
BLOOMINGTON, ILLINOIS TO VALLEY JCT., ILLINOIS
C.T.C. CIRCUITS
Office of AVP Engineering-Signal OMAHA NEBR.

DATE 06-20-08
SHEET 10
DWG 150.15
RTE-CSL

(REV. 7-9-00) (CIRCUIT.TYP)

EGMS
PROGRAM INFORMATION

PROGRAM VERSION 4.4

EGMS DISPLAY PARAMETERS

PARAMETER	
STARTUP LOGO	UPRR
BACKLIGHT TIMEOUT	015
BUZZER ENABLE	YES
DIRECTION INDICATORS	↓E ↑W
BUNGALOW QUAD	NB ENTR
DISPLAY QZI	NO
LOCAL PREFIX	'R'
REMOTE PREFIX	'T'
CROSSING NAME	LINCOLN STREET
CROSSING DESCRIPTION	4 QUAD PUB @ GRADE
CROSSING DOT #	290978H

EGMS OPERATIONAL PARAMETERS

PARAMETER	
PRIMARY MODE	DYNAMIC
SECONDARY MODE	NONE
DIS ENTR DETS	NO
DELAY ON DOWN	01.0
REV DET ENABLE	NO
DYNAMIC EGCT	000
TIMED EGCT	012
ISLAND INHIBIT TIME	015
XR DET DISABLE	YES
BIDIR DELAY	04.0
DYN ENTRANCE MONITOR	YES
ENTRANCE DOWN REQ	YES
EXIT UP REQ	NO
EGH SENSE	B12 HOLDS
ISL 2 ENABLE	NO
DUAL EGMS ENABLED	NO

EGMS ALARM PARAMETERS

PARAMETER	
GATO ALARM DELAY	000
GATO GATE DELAY	000
MAX GATE RELEASE	09.0 •
MAX GATE RESPONSE	03.0 •
CYCLE RESTORE	001
MTCD PRESENCE	000
DET FAIL ALARM	YES
DET RESTORE DELAY	000
MAX DET FAILS	000
AUX IN 1 ENABLE	NO
AUX IN 1 RESTORE	000
AUX IN 2 ENABLE	NO
AUX IN 2 RESTORE	000
AUX IN 3 ENABLE	NO
AUX IN 3 RESTORE	000
AUX IN 4 ENABLE	NO
AUX IN 4 RESTORE	000

• ADJUST GATE RELEASE, AND RESPONSE TIMES IN FIELD BASED ON ACTUAL GATE OPERATIONS, AS NECESSARY.

EGMS AUX OUTPUT MAPPING

PARAMETER	
AUX OUT 1 FUNCTION	DET XRISL
AUX OUT 1 SOURCE	BOTH
AUX OUT 2 FUNCTION	DET HLTH
AUX OUT 2 SOURCE	BOTH
AUX OUT 3 FUNCTION	GP
AUX OUT 3 SOURCE	BOTH
AUX OUT 4 FUNCTION	DET OBSTL
AUX OUT 4 SOURCE	BOTH

GATE PARAMETERS

GATE	1(A)	2(B)	3(C)	4(D)	5(E)	6(F)	7(G)	8(H)
GATE TYPE	ENTRANCE	ENTRANCE	EXIT	EXIT	INT	INT	NONE•	NONE•
GATE DIRECTION	↓E	↑W	↓E	↑W	↓E	↓W	↓S	↓S
VERTICAL CHATTER TIME	01.0	01.0	01.0	01.0	01.0	01.0	02.0	02.0
HORIZONTAL CHATTER TIME	01.0	01.0	01.0	01.0	01.0	01.0	02.0	02.0
MINIMUM ASCENT TIME	003	003	003	003	003	003	003	003
MAXIMUM ASCENT TIME	015	015	015	015	015	015	015	015
MINIMUM DESCENT TIME	003	003	003	003	003	003	003	003
MAXIMUM DESCENT TIME	015	015	015	015	015	015	015	015

• GATE TYPE = "NONE" ALL OTHER PARAMETERS IGNORED

DETECTOR PARAMETERS

	(1) E-1400				(2) E-1400				(3) E-1400				(4) E-1400			
DETECTOR	1	2	3	4	5	6	7	8	9	10	11	12	13	14	15	16
DETECTOR TYPE	ENTR	ENTR	EXIT	EXIT	INT	INT	NONE	NONE	NONE	NONE	NONE	NONE	NONE	NONE	NONE	NONE
DETECTOR DIRECTION	↓E	↑W	↓E	↑W	↓E	↑W	↓S	↓S	↓S	↓S	↓S	↓S	↓S	↓S	↓S	↓S
STRETCH TIME•	01.0	01.0	01.0	01.0	01.0	01.0	01.0	01.0	01.0	01.0	01.0	01.0	01.0	01.0	01.0	01.0
LONG-TERM OBSTRUCTION	001	001	001	001	001	001	000	000	000	000	000	000	000	000	000	000
DISABLE ON DOWN	NO	NO	NO	NO	NO	NO	NO	NO	NO	NO	NO	NO	NO	NO	NO	NO
AUX OUTPUT 1	YES	YES	YES	YES	YES	YES	YES	YES	YES	YES	YES	YES	YES	YES	YES	YES
AUX OUTPUT 2	YES	YES	YES	YES	YES	YES	YES	YES	YES	YES	YES	YES	YES	YES	YES	YES
AUX OUTPUT 3	YES	YES	YES	YES	YES	YES	YES	YES	YES	YES	YES	YES	YES	YES	YES	YES
AUX OUTPUT 4	YES	YES	YES	YES	YES	YES	YES	YES	YES	YES	YES	YES	YES	YES	YES	YES

• INCREASE STRETCH TIME AS NECESSARY TO MAINTAIN VEHICLE DETECTION FROM LOOP TO LOOP.
•• DETECTORS 5 - 16 DEFAULT TO "NONE" AND MUST BE CONFIGURED MANUALLY
DETECTORS 5 & 6 DEFAULT TO "INT" WHEN 2TK DEFAULT CONFIGURATION IS SELECTED.
WHEN DETECTOR TYPE IS "NONE", ALL OTHER PARAMETERS IGNORED.

NEW SHEET

Designed: 10/11/12
TIER 3 PHASE 4
M.P.161.00 TO
M.P.147.00
UPGRADE XINGS AND
CP'S FOR HIGH
SPEED RAIL
Rec#: WO#: 22821
IS: MWK/
/ /NST/MJF

MODIFICATION LEVEL	
Q. A. LAST LEVEL CHECKED	DU
LAST LEVEL MOD THIS TYPICAL	DU
LAST LEVEL BY DESIGNER	DU
CHANGED FROM TYPICAL?	Y

REV 01.24.11 4K 2TKEGMS.8

CIRCUIT MODIFICATIONS ARE NOT TO BE MADE WITHOUT AUTHORITY FROM THE OFFICE OF SIGNAL DESIGN

Date: 10/11/12
Des: NST
Chk: MWK
AFE: 22821

UNION PACIFIC RAILROAD
LAWNDALE, ILLINOIS
LINCOLN STREET
SPRINGFIELD SUBDIVISION
Office of AVP Engineering - Signal Omaha, Nebraska

Sh.: 10A
DOT 290978H
MP: 150.07
ID: CSL15007.10AX

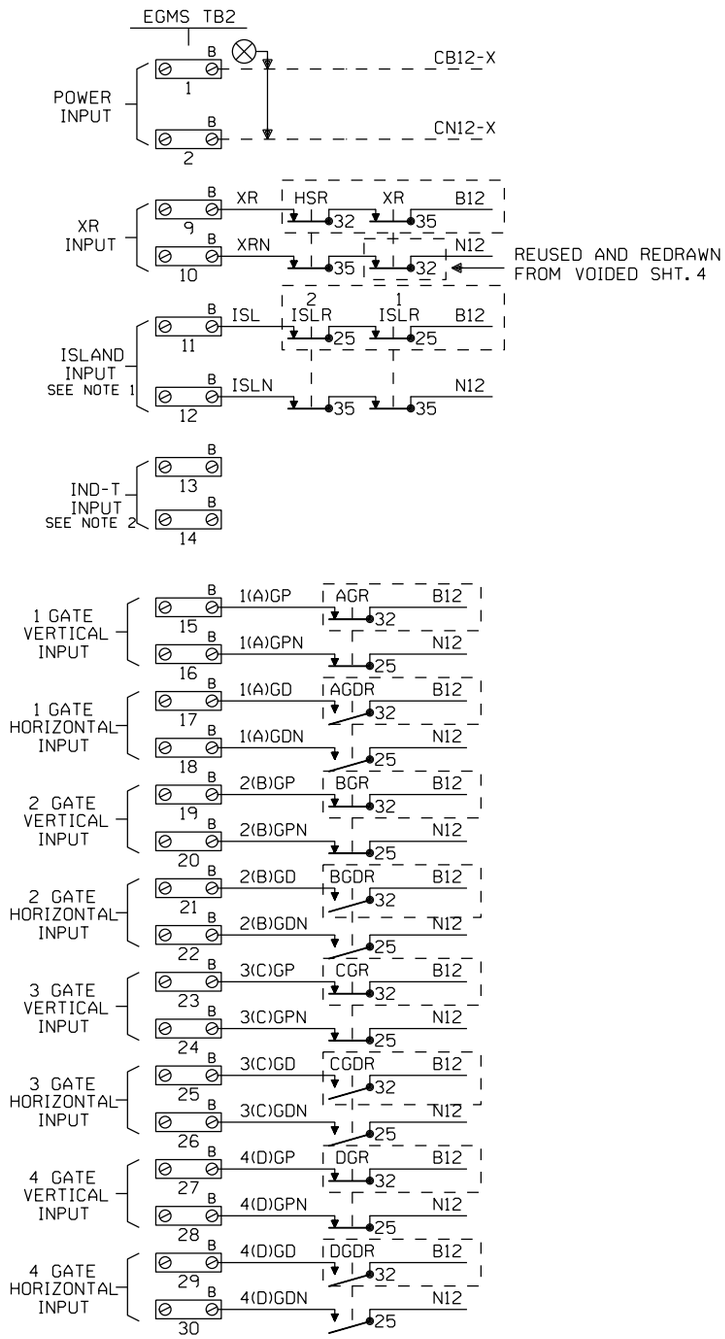

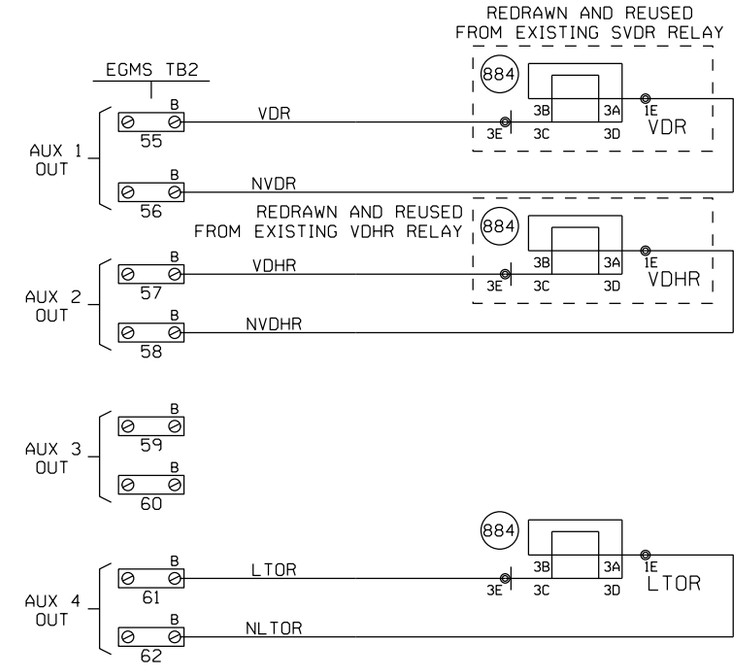

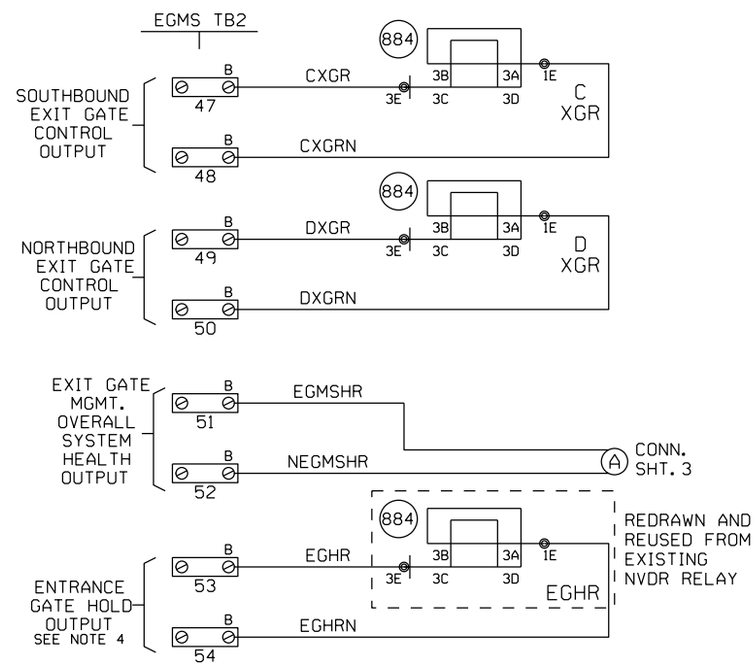

NOTES

1. EGMS ISL1 INPUT: "AND" ISLAND INPUTS FROM ALL TRACKS. NOTE THAT WHEN THIS INPUT IS DE-ENERGIZED THE XR INPUT ON TB2, 9 & 10 MUST ALSO BE DE-ENERGIZED BEFORE THE EXIT GATES MAY BE DRIVEN DOWN.
2. EGMS ISL2 INPUT: MAY BE USED FOR STAND ALONE ISLAND INPUT. THIS INPUT IS NOT DEPENDENT UPON THE STATUS OF XR INPUT ON TB2, 9 & 10. THIS INPUT MUST BE FIELD SELECTED AND ENABLED DURING EGMS SETUP.
3. ALL WIRING TO EGMS TO BE #16 AWG FLEX.
4. ENTRANCE GATE HOLD (EGH) CAN BE PROGRAMMED AS A NORMALLY ENERGIZED OR NORMALLY DE-ENERGIZED OUTPUT.

- - - - - = REDRAWN AND REUSED FROM SHEET 2

NEW SHEET

Designed: 10/11/12 TIER 3 PHASE 4 M.P.161.00 TO M.P.147.00 UPGRADE XINGS AND CP'S FOR HIGH SPEED RAIL Rec#: WO#: 22821 IS: MWK / / /NST/MJF	MODIFICATION LEVEL		CIRCUIT MODIFICATIONS ARE NOT TO BE MADE WITHOUT AUTHORITY FROM THE OFFICE OF SIGNAL DESIGN	Date: 10/11/12	UNION PACIFIC RAILROAD	Sh.: 10B
	Q.A. LAST LEVEL CHECKED	DU		Des: NST	LAWNDALE, ILLINOIS	DOT 290978H
	LAST LEVEL MOD THIS TYPICAL	DU		Chk: MWK	LINCOLN STREET	MP: 150.07
	LAST LEVEL BY DESIGNER	DU		AFE: 22821	SPRINGFIELD SUBDIVISION	ID: CSL15007.10BX
	CHANGED FROM TYPICAL?	Y			Office of AVP Engineering - Signal Omaha, Nebraska	
	REV 01.24.11 4K 2TKEGMS.8A					