ITCS HIGH SPEED WARNING TIME 86 SECONDS
PRIME WARNING TIME = 37 SECONDS

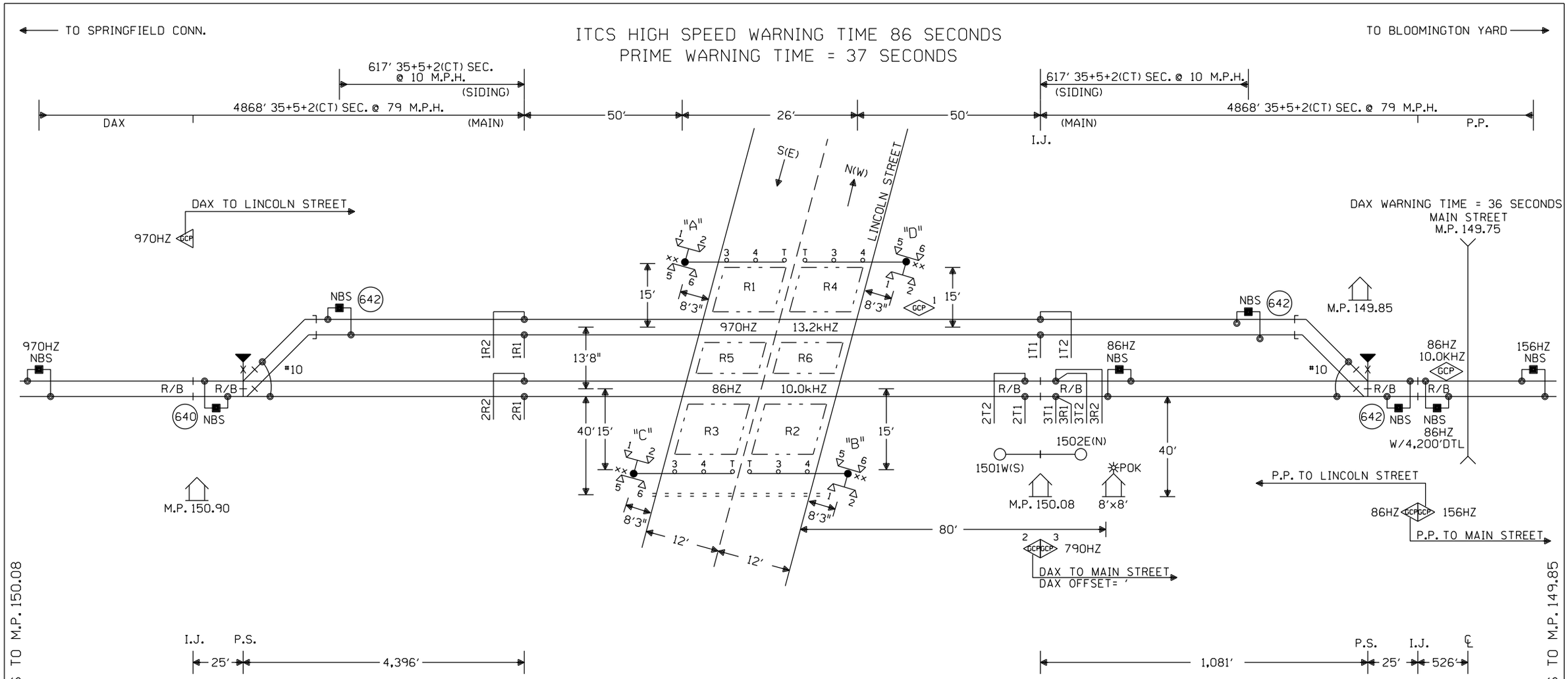

NOTES:

⊗ = TWISTED WIRES
INSULATED 1 TWIST PER FT.
ALL TRACK WIRES 2C. #6

TRANSMITTER AND RECEIVER LEADS TO BE SEPARATED BY AT LEAST 12" IN TRENCH, LENGTHS SHOULD NOT EXCEED MANUFACTURES RECOMMENDATION.

TOP OF FOUNDATION TO BE AT SAME ELEVATION AS THE SURFACE OF THE TRAVELED WAY & NO MORE THAN 4" ABOVE THE SURFACE OF THE GROUND.

ALL BUNGALOW WIRING TO BE #16 AWG FLEX UNLESS OTHERWISE SPECIFIED EXCEPT ALL GROUND WIRE TO BE #6 AWG FLEX OR LARGER.

ALL WIRING IN GATE MECHANISM TO BE #10 "AWG FLEX".

REFER TO UP STANDARD DWG FOR BUNGALOW GROUNDING.

PORTABLE GENERATOR EXTENSION CORD FOR 240V TO 240V IS PROVIDED AS WELL AS A 120V TO 240V ADAPTER.

ALL LIGHTS TO BE 12" ROUNDELS.

= = = = = = 4" X 65' CONDUIT

LIGHTS: LED LIGHTS

GATE A: 20'
GATE B: 20'
GATE C: 20'
GATE D: 20'

xx = BELL

EXIT GATE MANAGEMENT SYSTEM (EGMS) LOOP LOCATION:

1.) 12" FROM CONCRETE CROSSING PANEL. MAY VARY FROM 6" TO 12" DEPENDING ON PAVEMENT QUALITY.

2.) 2' FROM CROSSING CENTERLINE.

3.) 3.5' FROM GATE ARM.

4.) 2' FROM THE EDGE OF THE TRAVELED WAY. MAY BE INCREASED UP TO A MAXIMUM OF 5' WHERE AN IMPROVED SHOULDER OR OTHER EXISTS.

5.) MAXIMUM LOOP WIDTH NOT TO EXCEED 8' AND MINIMUM WIDTH TYPICALLY NOT TO BE LESS THAN 5'. LOOPS BETWEEN TRACKS MUST NOT BE LESS THAN 3'. HOWEVER SMALLER LOOPS ARE ACCEPTABLE.

6.) DISTANCE BETWEEN ADJACENT LOOPS FOR ONE DIRECTION OF TRAFFIC MUST NOT EXCEED 13'.

7.) MAXIMUM LOOP AREA NOT TO EXCEED 144 SQUARE FEET.

8.) MAXIMUM LENGTH OF THE LONGEST SIDE OF A LOOP SHALL NOT EXCEED 28'6".

— — = EGMS LOOP

CONSTRUCTION NOTES:

1. REUSE EXISTING 8'X8' HOUSE.
2. REUSE AND RELOCATE EXISTING GATES TO BE 15' FROM CENTERLINE OF CLOSEST TRACK AND 8'3" FROM EDGE OF ROAD.
3. REPLACE ALL VEHICLE DETECTION LOOPS.

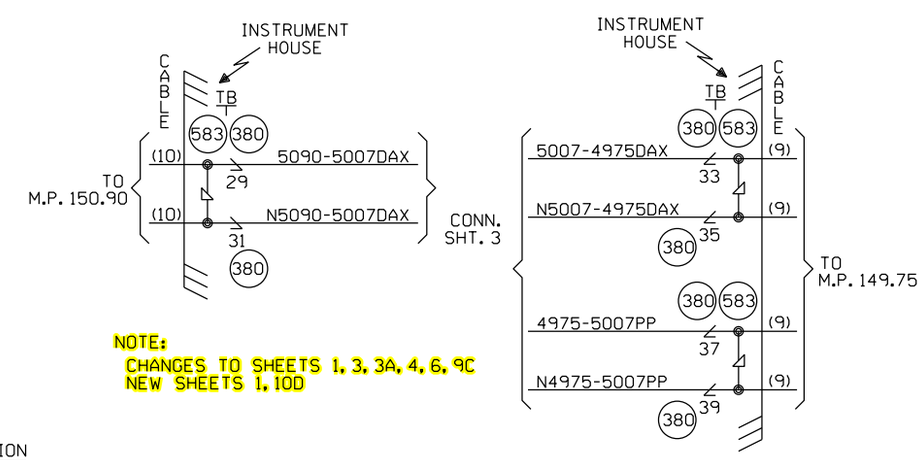

NOTE:
CHANGES TO SHEETS 1, 3, 3A, 4, 6, 9C
NEW SHEETS 1, 10D

W(S) ← → E(N)

CABLE TABULATION
CABLE NO.9 7C NO.14 U.G.B.T. HOUSE TO M.P. 149.75 (EXISTING)
CABLE NO.10 7C NO.14 U.G.B.T. HOUSE TO M.P. 150.90

NEW SHEET

Designed: 9/28/16	MODIFICATION LEVEL		CIRCUIT MODIFICATIONS ARE NOT TO BE MADE WITHOUT AUTHORITY FROM THE OFFICE OF SIGNAL DESIGN	Date: 09/28/16	UNION PACIFIC RAILROAD
REVISE ROAD ANGLE AND LOOPS AT LINCOLN STREET M.P. 150.07	G. A. LAST LEVEL CHECKED	DU		Des: NST	LAWNDALE, ILLINOIS LINCOLN STREET SPRINGFIELD SUBDIVISION
	LAST LEVEL MOD THIS TYPICAL	DU		Chk: NBT	
	LAST LEVEL BY DESIGNER	DU		AFE: 22821	Office of AVP Engineering - Signal Omaha, Nebraska
Rec#: WO#: 22821	CHANGED FROM TYPICAL?	Y			
IS: NBT NST/JVJ	REV 01.24.11 4K 2TKEGMS.1				

Sh.:	1
DOT	290978H
MP:	150.07
ID:	CSL15007.1X

The Incremental Train Control System (ITCS) provides advance activation of the crossings for all ITCS equipped trains travleing over 20 M.P.H. The ITCS is a communication-based train control system that provides enforcement and advanced start of public crossings. ITCS vitally monitors the existing crossings as a basis for determining permissible action and uses a radio frequency (RF) data link with a vital communication protocol to send wayside status to the trains. Enforcement of speed limits is performed vitally by an onboard computer (OBC). The wayside components monitor Crossing Warning Systems and relay the information to the train over the RF network as a list of device statuses. The OBC interprets the statuses and enforces all speed limits and braking based upon those statuses. The OBC must receive an acknowledgment from the crossing, verifying the proper operation of the Crossing Warning System, before the train can proceed at high speed through the crossings aprroach circuit. This is the High Speed OK (HSOK) status. If this status is not true, a 79 M.P.H. target speed limit is placed at the start of the conventional track circuit based approach of the crossing.
Conditions that would cause this to happen are:

- The Advance Start Enable test switch is open.
- The Crossing has been activated longer than 3.5 minutes but less than 5 minutes, without a train present on the crossing.
- The loss of communitations longer than 2 minutes 30 seconds.

The most restrictive status in the health status. If the health status for the crossing is not true a 15 M.P.H. target speed limit is placed at the leading island wires of the crossing.
Conditions that would cause this to happen are:

- Activation failure detected. (No vertical gate contact indicating de-energized within 10 seconds of request for crossing to activate)

  If this failure has occurred it requires the advance start enable test switch to be opened to reset the box before any further High Speed operation is allowed.
- The crossing has been activated longer than 5 minutes, without a train present on the crossing.
- The vehicle detector does not indicate clear, or the Gate Down circuit not energized within 20 seconds (Field adjustable) of crossing being requested to activate.
- The vehicle detector health not true. This input consists of the detector loop health, EGMS health, Battery health, and Long Term Occupancy of Vehicle Detector Loop (Greater than 1 minute.)

NEW SHEET

							Designed: 10/11/12 TIER 3 PHASE 4 M.P.161.00 TO M.P.147.00 UPGRADE XINGS AND CP'S FOR HIGH SPEED RAIL Rec#: WO#: 22821 IS: MWK/ / /NST/MJF	CIRCUIT MODIFICATIONS ARE NOT TO BE MADE WITHOUT AUTHORITY FROM THE OFFICE OF SIGNAL DESIGN	Date: 10/11/12 Des: NST Chk: MWK AFE: 22821	UNION PACIFIC RAILROAD LAWNDALE, ILLINOIS LINCOLN STREET SPRINGFIELD SUBDIVISION Office of AVP Engineering - Signal Omaha, Nebraska	Sh.: 1A DOT 290978H MP: 150.07 ID: CSL15007.1AX

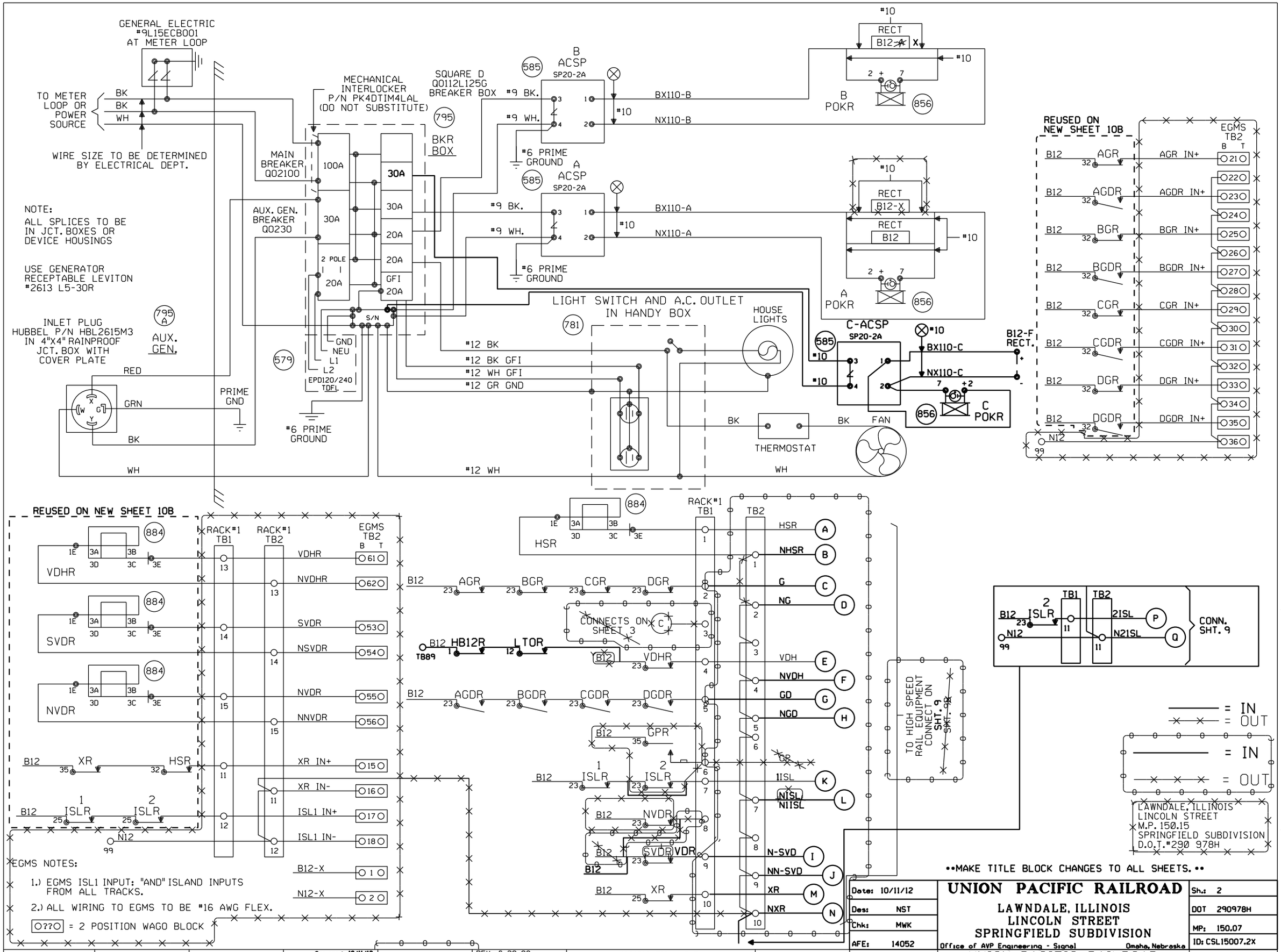

Designed: 10/11/12
TIER 3 PHASE 4
M.P.161.00 TO M.P.147.00
UPGRADE XINGS AND CP'S FOR HIGH SPEED RAIL
Rec': WO': 22821
IS: MWK/ /NST/MJF

02-24-09
INSTALL MONITOR RACK FOR XINGS
W.O. 87933 MAS

REV. 6-20-08
UPGRADED CROSSING PROTECTION FOR THE HIGH SPEED RAIL PROJ. FROM MAZONIA TO SPRINGFIELD
W.O. #00183
REC. #15265
3-8-06 JJF
CM/WITT/WITT/JNM

MODIFICATION LEVEL	
Q.A. LAST LEVEL CHK'D.	DA
LAST LEVEL MOD. THIS TYP.	CZ
LAST LEVEL BY DESIGNER.	DD
CHANGED FROM TYP.? Y/N	Y

CIRCUIT MODIFICATIONS ARE NOT TO BE MADE WITHOUT AUTHORITY FROM THE OFFICE OF SIGNAL DESIGN

Date:	10/11/12
Des:	NST
Chk:	MWK
AFE:	14052
DES:	WITT.IND.
DIG:	WITT.IND.
CHK:	J.J.F.
A.F.E.	00183
ID=	CSL15015.2X

UNION PACIFIC RAILROAD

LAWNDALE, ILLINOIS
LINCOLN STREET
SPRINGFIELD SUBDIVISION

Office of AVP Engineering - Signal Omaha, Nebraska

UNION PACIFIC RAILROAD
BLOOMINGTON, ILLINOIS TO VALLEY JCT., ILLINOIS
C.T.C. CIRCUITS

Office of AVP Engineering-Signal OMAHA NEBR.

Sh.:	2
DOT	290978H
MP:	150.07
ID:	CSL15007.2X
DATE	4-1-02
SHEET	2
DWG	150.15
RTE-CSL	

(REV. 7-9-00) (HCA4G.2)

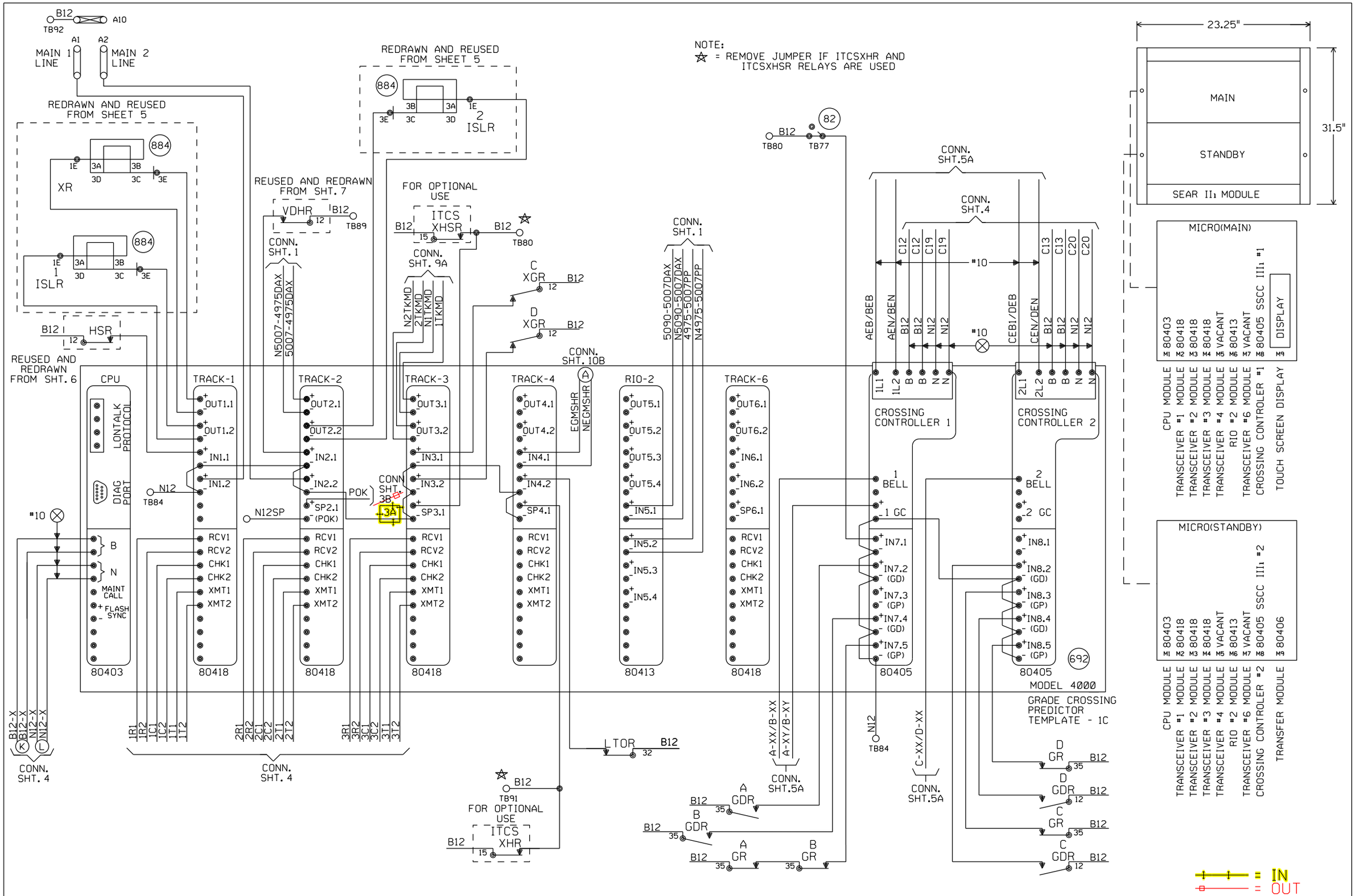

"Mf" FREQUENCY (HZ)	MAXIMUM TRANSMIT WIRE LENGTH (FEET)
86	100
114	125
156	150
211	200
285-970	250

NOTE:
EACH TRANSMITTER TO RAIL WIRE FROM XMT1 AND XMT2 MUST NOT EXCEED THE MAXIMUM LENGTH SPECIFIED IN THE TABLE SHOWN. THE RECEIVER WIRE LENGTH IS NOT CRITICAL. DOES NOT APPLY TO 6 TRACK WIRE APPLICATION. ~~NEW SHEET~~

Designed: 9/28/16
REVISE ROAD ANGLE AND LOOPS AT LINCOLN STREET M.P. 150.07
Rec*: WO*: 22821 /NBT
IS: /NST/JVJ

Designed: 10/11/12
TIER 3 PHASE 4 M.P.161.00 TO M.P.147.00 UPGRADE XINGS AND CP'S FOR HIGH SPEED RAIL
Rec*: WO*: 22821 MWK/
IS: / /NST/MJF

MODIFICATION LEVEL	
Q. A. LAST LEVEL CHECKED	DU
LAST LEVEL MOD THIS TYPICAL	DU
LAST LEVEL BY DESIGNER	DU
CHANGED FROM TYPICAL?	Y

REV 01.24.11 4K 2TKEGMS.3

CIRCUIT MODIFICATIONS ARE NOT TO BE MADE WITHOUT AUTHORITY FROM THE OFFICE OF SIGNAL DESIGN

Date: 10/11/12
Des: NST
Chk:
AFE: 22821

UNION PACIFIC RAILROAD
LAWNDALE, ILLINOIS
LINCOLN STREET
SPRINGFIELD SUBDIVISION
Office of AVP Engineering - Signal — Omaha, Nebraska

Sh.: 3
DOT 290978H
MP: 150.07
ID: CSL15007.3X

Minimum Program Steps Report

Location and SIN

DOT Number: 290978H
Milepost Number: 150.07
Site Name: LAWNDALE, IL

SIN: 762010010016 *

* Parameter is part of office check number calculation.

MCF and Template Selection

MCF Name: GCP-T6X-02-4.mcf
MCF Revision: 24
MCFCRC: 09FC363B

Template = 1C:2 Bi, 2 Uni pairs (OCCN) *

* Parameter is part of office check number calculation.

Minimum Program Steps

BASIC: module configuration
Track 5/RIO 2 Slot = RIO (OCCN) *

PREDICTORS: track 2
Track 2 : Dax A Used = Yes (OCCN) *

GCP: track 1
Track 1 : GCP Frequency = 970 Hz (Set in Field,TCN)
Track 1 : Approach Distance = 617 ft (Set in Field,TCN)
Track 1 : Island Distance = 126 ft (Set in Field,TCN)

GCP: track 1 prime
Track 1 : Prime Warning Time = 37 sec (OCCN) *

GCP: track 2
Track 2 : GCP Frequency = 86 Hz (Set in Field,TCN)
Track 2 : Approach Distance = 4421 ft (Set in Field,TCN)
Track 2 : Island Distance = 126 ft (Set in Field,TCN)

GCP: track 2 prime
Track 2 : Prime Warning Time = 37 sec (OCCN) *
Track 2 : Prime UAX = IP (OCCN) *
Track 2 : Prime UAX Pickup = 15 sec (OCCN) *

GCP: track 2 Dax A
Track 2 : Dax A Warning Time = 36 sec (OCCN) *
Track 2 : Dax A Offset Distance = 1694 ft (Set in Field)

GCP: track 3
Track 3 : GCP Frequency = 790 Hz (Set in Field,TCN)
Track 3 : Approach Distance = 1106 ft (Set in Field,TCN)

GCP: track 3 prime
Track 3 : Prime Warning Time = 37 sec (OCCN) *
Track 3 : Prime UAX = IP (OCCN) *
Track 3 : Prime UAX Pickup = 15 sec (OCCN) *

ISLAND: track 1

```
Track 1 : Isl Frequency = 13.2 kHz (Set in Field)
Track 1 : Pickup Delay (2s +) = 2 sec (OCCN) *

ISLAND:  track 2
Track 2 : Isl Frequency = 10.0 kHz (Set in Field)
Track 2 : Pickup Delay (2s +) = 2 sec (OCCN) *

AND:  track Anding
AND 2 Used = Yes (OCCN) *

AND:  AND 1 XR
AND 1 Enable Used = Yes (OCCN) *

AND:  AND 2
AND 2 Track 2 = Prime (OCCN) *
AND 2 Track 3 = Prime (OCCN) *

ADVANCED:  out of service
OOS Control = OOS IPs (OCCN) *

ADVANCED:  out of service 2
T3 OOS Control = OOS Input 2 (OCCN) *

SSCC
Bell On Gate Rising = Yes (OCCN) *

SSCC:  2
SSCC-2 Number of GPs = 2 (OCCN) *
SSCC-2 Number of GDs = 2 (OCCN) *

OUTPUT:  assignment page 1
OUT 1.1 = AND 1 XR (OCCN) *
OUT 1.2 = T1 Island (OCCN) *
OUT 2.1 = T2 Dax A (OCCN) *
OUT 2.2 = T2 Island (OCCN) *
OUT 3.1 = T1 Prime (OCCN) *
OUT 3.2 = AND 2 (OCCN) *

INPUT:  assignment page 1
IN 1.1 = AND 1 XR Enable (OCCN) *
IN 1.2 = Out Of Service IP 1 (OCCN) *
IN 2.1 = GP 1.1 (OCCN) *
IN 2.2 = Out Of Service IP 2 (OCCN) *

INPUT:  assignment page 2
IN 5.1 = T2 Prime UAX (OCCN) *
IN 5.2 = T3 Prime UAX (OCCN) *

IO:  assignment SSCC
IN 7.1 = AND 1 XR Enable (OCCN) *
IN 7.2 = GD 1.1 (OCCN) *
IN 7.4 = GD 1.2 (OCCN) *
IN 8.2 = GD 2.1 (OCCN) *
IN 8.3 = GP 2.1 (OCCN) *
IN 8.4 = GD 2.2 (OCCN) *
IN 8.5 = GP 2.2 (OCCN) *

SEAR:  inputs
SP 3.1 = General 3 (OCCN) *
SP 4.1 = General 4 (OCCN) *

SEAR:  slot 1-4 inputs
IN 3.1 = General 2 (OCCN) *
```

IN 3.2 = General 1 (OCCN) *
IN 4.1 = Vehicle Det Hlth (OCCN) *
IN 4.2 = 3 Vehicle Detect (OCCN) *

* Parameter is part of office check number calculation.

Check Numbers

Office Check Number: 1CEF1854
Config. Check Number: 4AFE9156
(Based on MCF Revision 24)

Parameters not part of office check number calculation:

Track 1 : GCP Frequency = 970 Hz (Set in Field)
Track 1 : Approach Distance = 617 ft (Set in Field)
Track 1 : Island Distance = 126 ft (Set in Field)
Track 2 : GCP Frequency = 86 Hz (Set in Field)
Track 2 : Approach Distance = 4421 ft (Set in Field)
Track 2 : Island Distance = 126 ft (Set in Field)
Track 2 : Dax A Offset Distance = 1694 ft (Set in Field)
Track 3 : GCP Frequency = 790 Hz (Set in Field)
Track 3 : Approach Distance = 1106 ft (Set in Field)
Track 1 : Isl Frequency = 13.2 kHz (Set in Field)
Track 2 : Isl Frequency = 10.0 kHz (Set in Field)

Comments

<none>

Configuration Package File

Filename: CSL15007_290978H.pac
Path: H:\UP\Springfield Sub Tier 3 Ph. 4 Lincoln St. CO 11-404-4\PAC Files\150.07\
Date/Time: 9/28/2016 17:25:36
DT Version: 5.7.3

NOTE:
1) DO NOT JUMPER UNUSED INPUTS
2) THE CAR14 SERIAL PORT IS AVAILABLE TO ADD REMOTE CONNECTIVITY TO EXISTING LOGGING EQUIPMENT. USE NULL MODEM CABLE WITH SHIELDING DISCONNECTED AT ONE OR BOTH SIDES.

ANALOG INPUTS:
A1) B12X BATTERY BANK
A2) B12 BATTERY BANK
A3) B12-F BATTERY BANK
A4) BATTERY BANK 4

DIGITAL INPUTS
D1) XR (BLUE WIRE)
D2) HSR
D3) ANALYZER FAILURE (WHITE WIRE)
D4) HIGH TEMPERATURE (ORANGE WIRE)
D5) GATES NOT UP OR DOWN PROPERLY (GREEN WIRE)
D6)
D7) VDHR - EGMS LOOP HEALTH
D8) LTOR - EGMS LONG-TERM OBSTACLE
D9) ITCS HEALTH (JUMPER TO B12SP IF UNUSED)
D10) POWER OFF INDICATION

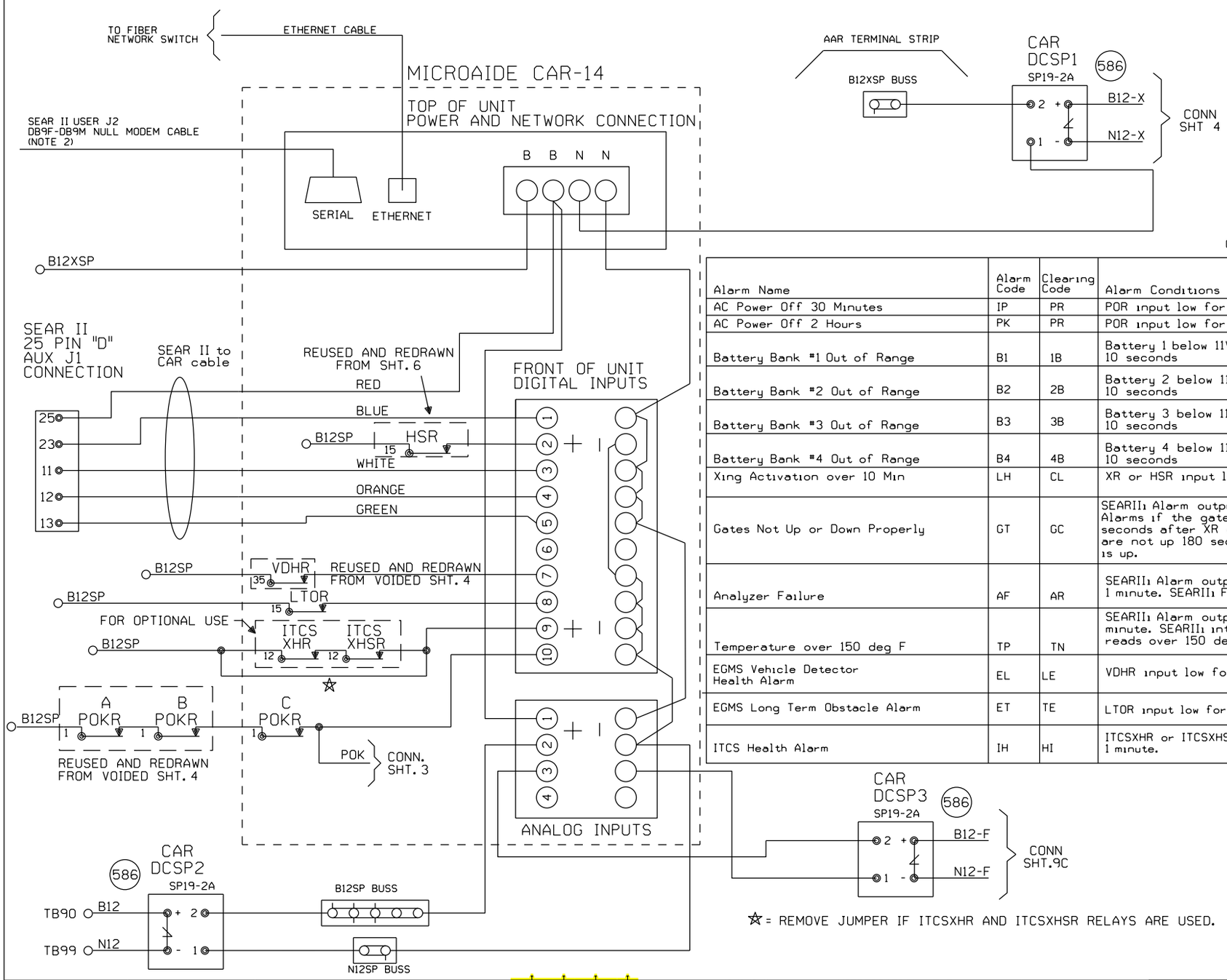

CONFIG: C14HISPEED

Alarm Name	Alarm Code	Clearing Code	Alarm Conditions	Alarm Clearing Conditions	Cleared by Maintainer Mode?
AC Power Off 30 Minutes	IP	PR	POR input low for 30 minutes.	POR input high for 5 minutes.	No
AC Power Off 2 Hours	PK	PR	POR input low for 2 Hours.	POR input high for 5 minutes.	No
Battery Bank #1 Out of Range	B1	1B	Battery 1 below 11V or over 19V for 10 seconds	Battery 1 between 11V or over 19V for 5 minutes	No
Battery Bank #2 Out of Range	B2	2B	Battery 2 below 11V or over 19V for 10 seconds	Battery 2 between 11V or over 19V for 5 minutes	No
Battery Bank #3 Out of Range	B3	3B	Battery 3 below 11V or over 19V for 10 seconds	Battery 3 between 11V or over 19V for 5 minutes	No
Battery Bank #4 Out of Range	B4	4B	Battery 4 below 11V or over 19V for 10 seconds	Battery 4 between 11V or over 19V for 5 minutes	No
Xing Activation over 10 Min	LH	CL	XR or HSR input low for 10 minutes.	XR and HSR input high for 10 seconds.	Yes
Gates Not Up or Down Properly	GT	GC	SEARII1 Alarm output high for 5 seconds. Alarms if the gates are not down 45 seconds after XR drops, or the gates are not up 180 seconds after the XR is up.	SEARII1 alarm output low for 5 seconds. Gates have recovered	No
Analyzer Failure	AF	AR	SEARII1 Alarm output high for 1 minute. SEARII1 Failure	SearII1 alarm output low for 5 seconds. SEARII1 has recovered after an analyzer failure alarm.	No
Temperature over 150 deg F	TP	TN	SEARII1 Alarm output high for 1 minute. SEARII1 internal thermometer reads over 150 degrees F.	SEARII1 Alarm Output low for 5 minutes. Temperature has reduced after a High-Temp alarm.	No
EGMS Vehicle Detector Health Alarm	EL	LE	VDHR input low for 10 seconds	VDHR input is high for 5 seconds	No
EGMS Long Term Obstacle Alarm	ET	TE	LTOR input low for 1 minute	LTOR input is high for 5 seconds	No
ITCS Health Alarm	IH	HI	ITCSXHR or ITCSXHSR low for 1 minute.	ITCSXHR or ITCSXHSR high for 5 seconds.	No

☆ = REMOVE JUMPER IF ITCSXHR AND ITCSXHSR RELAYS ARE USED.

= IN
= OUT

~~NEW SHEET~~

Designed: 4/28/16
REVISE ROAD ANGLE AND LOOPS AT LINCOLN STREET M.P. 150.07
Rec#: WO#: 22821 /NBT
IS: /NST/JVJ

Designed: 10/11/12
TIER 3 PHASE 4
M.P.161.00 TO M.P.147.00
UPGRADE XINGS AND CP'S FOR HIGH SPEED RAIL
Rec#: WO#: 22821 MWK/
IS: /NST/MJF

MODIFICATION LEVEL	
Q. A. LAST LEVEL CHECKED	DU
LAST LEVEL MOD THIS TYPICAL	DU
LAST LEVEL BY DESIGNER	DU
CHANGED FROM TYPICAL?	Y

REV 01.24.11 4K ACDCCAR14SII.3

CIRCUIT MODIFICATIONS ARE NOT TO BE MADE WITHOUT AUTHORITY FROM THE OFFICE OF SIGNAL DESIGN

Date: 10/11/12
Des: NST
Chk: MWK
AFE: 22821

UNION PACIFIC RAILROAD
LAWNDALE, ILLINOIS
LINCOLN STREET
SPRINGFIELD SUBDIVISION
Office of AVP Engineering - Signal Omaha, Nebraska

Sh.: ~~3B~~ 3A
DOT 290978H
MP: 150.07
ID: CSL15007.3B~~X~~ 3AX

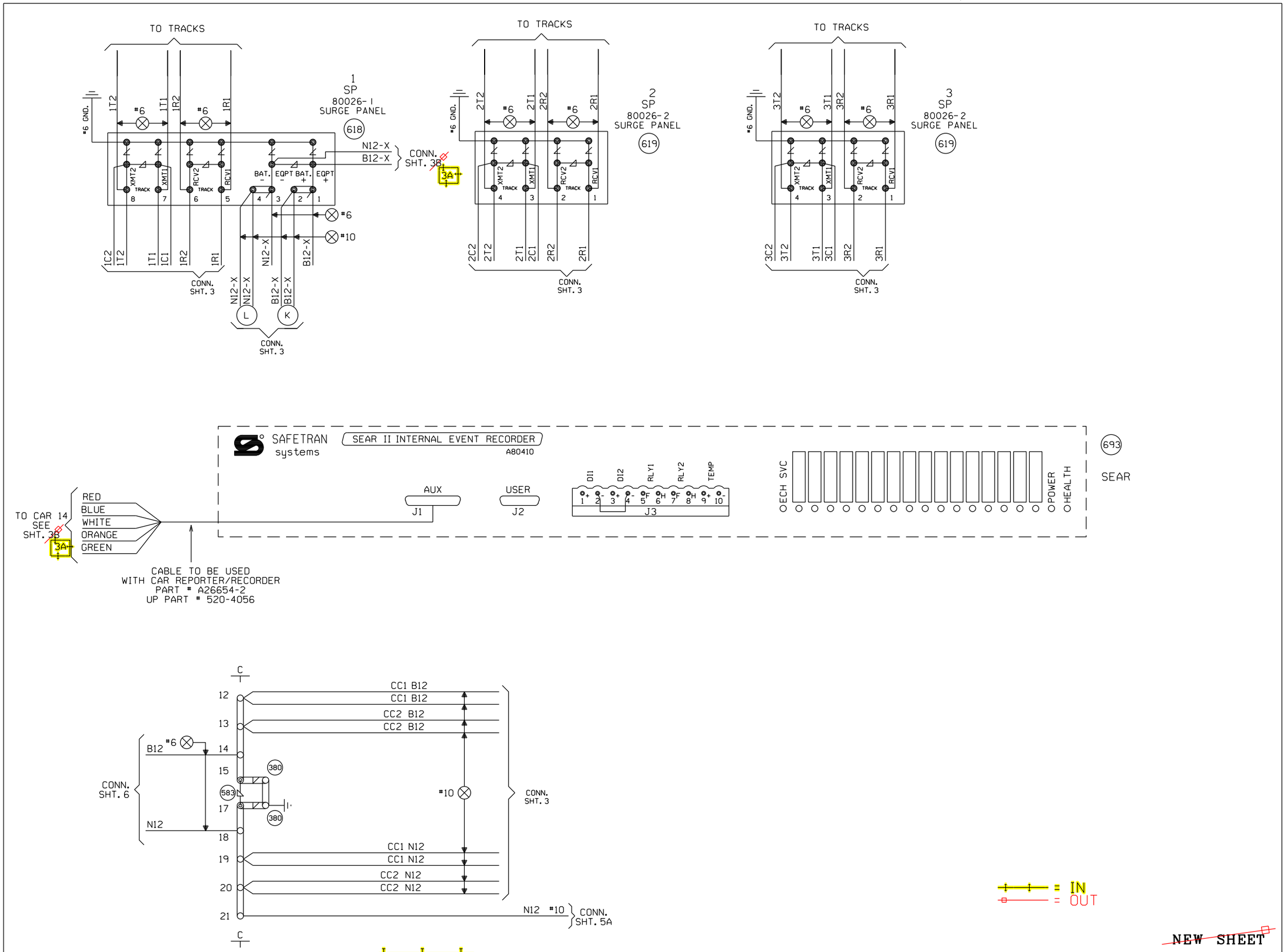

Designed: 9/28/16
REVISE ROAD ANGLE AND LOOPS AT LINCOLN STREET M.P. 150.07
Rec#: WO#: 22821
IS: /NBT /NST/JVJ

Designed: 10/11/12
TIER 3 PHASE 4
M.P.161.00 TO M.P.147.00
UPGRADE XINGS AND CP'S FOR HIGH SPEED RAIL
Rec#: WO#: 22821
IS: MWK / /NST/MJF

MODIFICATION LEVEL	
Q. A. LAST LEVEL CHECKED	DU
LAST LEVEL MOD THIS TYPICAL	DU
LAST LEVEL BY DESIGNER	DU
CHANGED FROM TYPICAL?	Y

REV 01.24.11 4K 2TKEGMS.4

CIRCUIT MODIFICATIONS ARE NOT TO BE MADE WITHOUT AUTHORITY FROM THE OFFICE OF SIGNAL DESIGN

Date:	10/11/12
Des:	NST
Chk:	MWK
AFE:	22821

UNION PACIFIC RAILROAD

LAWNDALE, ILLINOIS
LINCOLN STREET
SPRINGFIELD SUBDIVISION

Office of AVP Engineering - Signal Omaha, Nebraska

Sh.:	4
DOT	290978H
MP:	150.07
ID:	CSL15007.4X

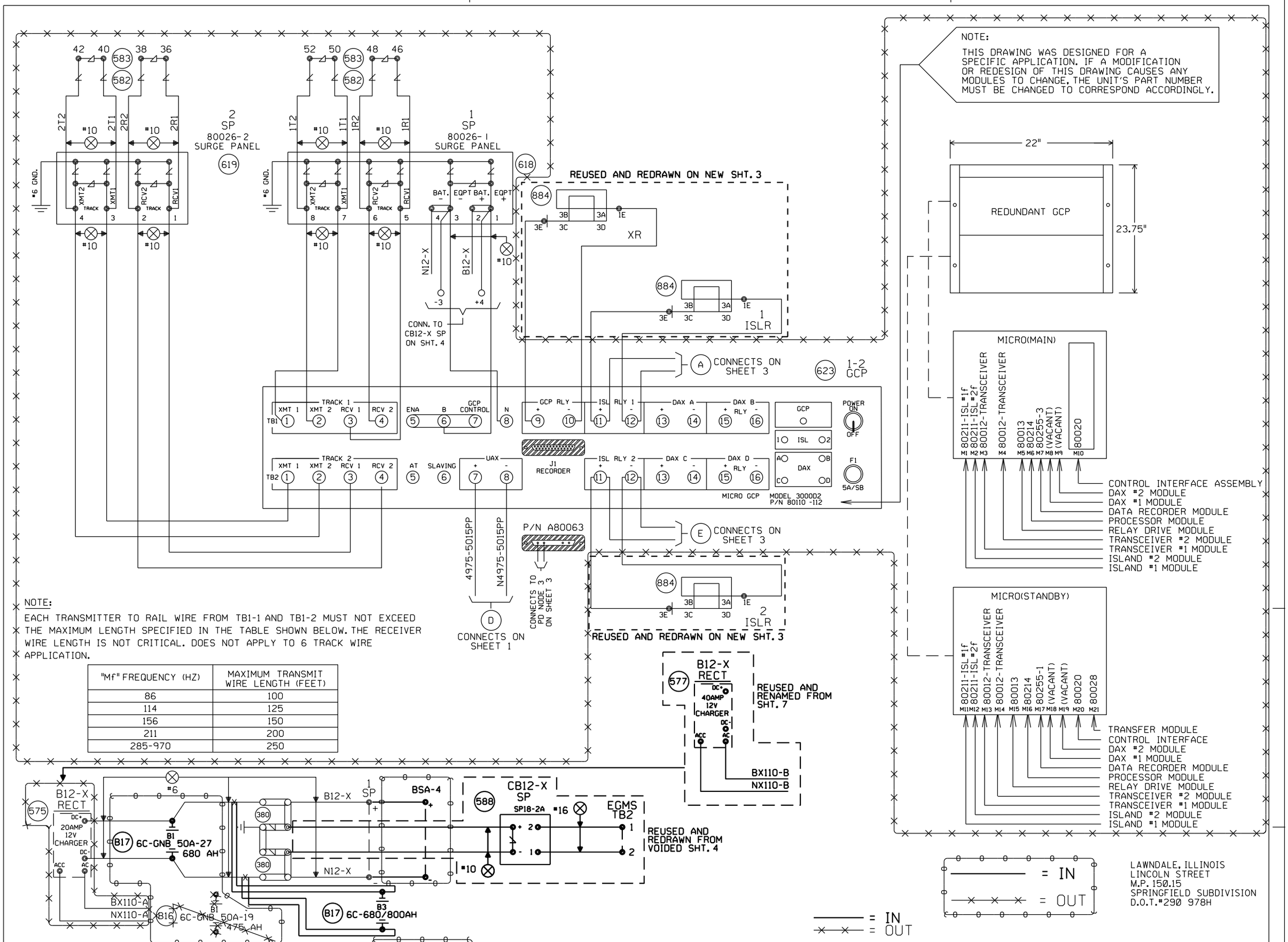

NOTE:

EACH TRANSMITTER TO RAIL WIRE FROM TB1-1 AND TB1-2 MUST NOT EXCEED THE MAXIMUM LENGTH SPECIFIED IN THE TABLE SHOWN BELOW. THE RECEIVER WIRE LENGTH IS NOT CRITICAL. DOES NOT APPLY TO 6 TRACK WIRE APPLICATION.

"Mf" FREQUENCY (HZ)	MAXIMUM TRANSMIT WIRE LENGTH (FEET)
86	100
114	125
156	150
211	200
285-970	250

Designed: 10/11/12
TIER 3 PHASE 4
M.P.161.00 TO M.P.147.00
UPGRADE XINGS AND CP'S FOR HIGH SPEED RAIL
Rec': WO#: 22821
IS: MWK/ / /NST/MJF

02-24-09
INSTALL MONITOR RACK FOR XINGS
W.O. 87933 MAS

REV. 6-20-08
UPGRADED CROSSING PROTECTION FOR THE HIGH SPEED RAIL PROJ. FROM MAZONIA TO SPRINGFIELD
W.O. #00183
REC. #15265
3-8-06 JJF
CM/WITT/WITT/JNM

MODIFICATION LEVEL	
Q.A. LAST LEVEL CHK'D.	DA
LAST LEVEL MOD. THIS TYP.	CZ
LAST LEVEL BY DESIGNER.	DD
CHANGED FROM TYP.? Y/N	Y

CIRCUIT MODIFICATIONS ARE NOT TO BE MADE WITHOUT AUTHORITY FROM THE OFFICE OF SIGNAL DESIGN

DES: WITT.IND.
DIG: WITT.IND.
CHK: J.J.F.
A.F.E. 00183
ID= CSL15015.5X

UNION PACIFIC RAILROAD
BLOOMINGTON, ILLINOIS TO VALLEY JCT., ILLINOIS
C.T.C. CIRCUITS
Office of AVP Engineering-Signal OMAHA NEBR.

DATE 4-1-02
SHEET 5
DWG 150.15
RTE-CSL

(REV. 7-9-00) (3K2TKUG.4)

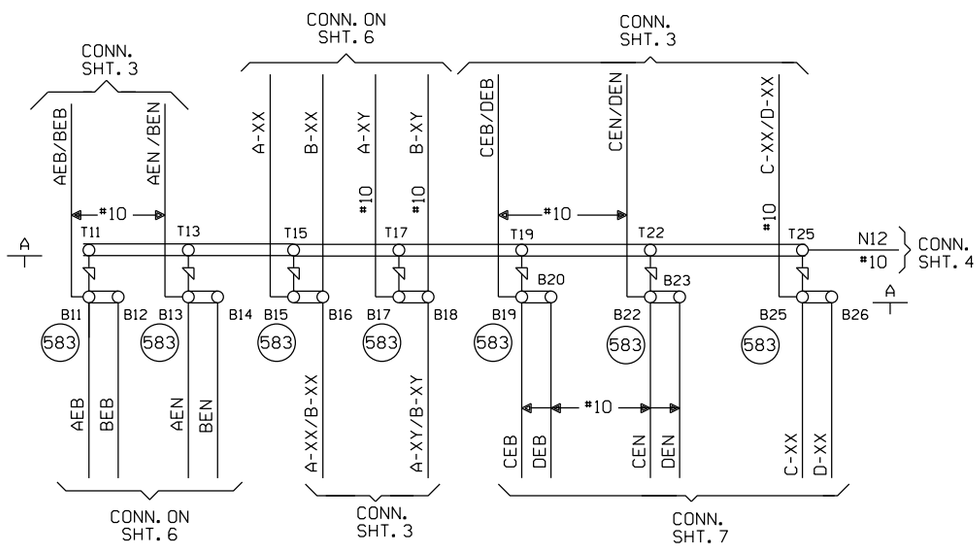

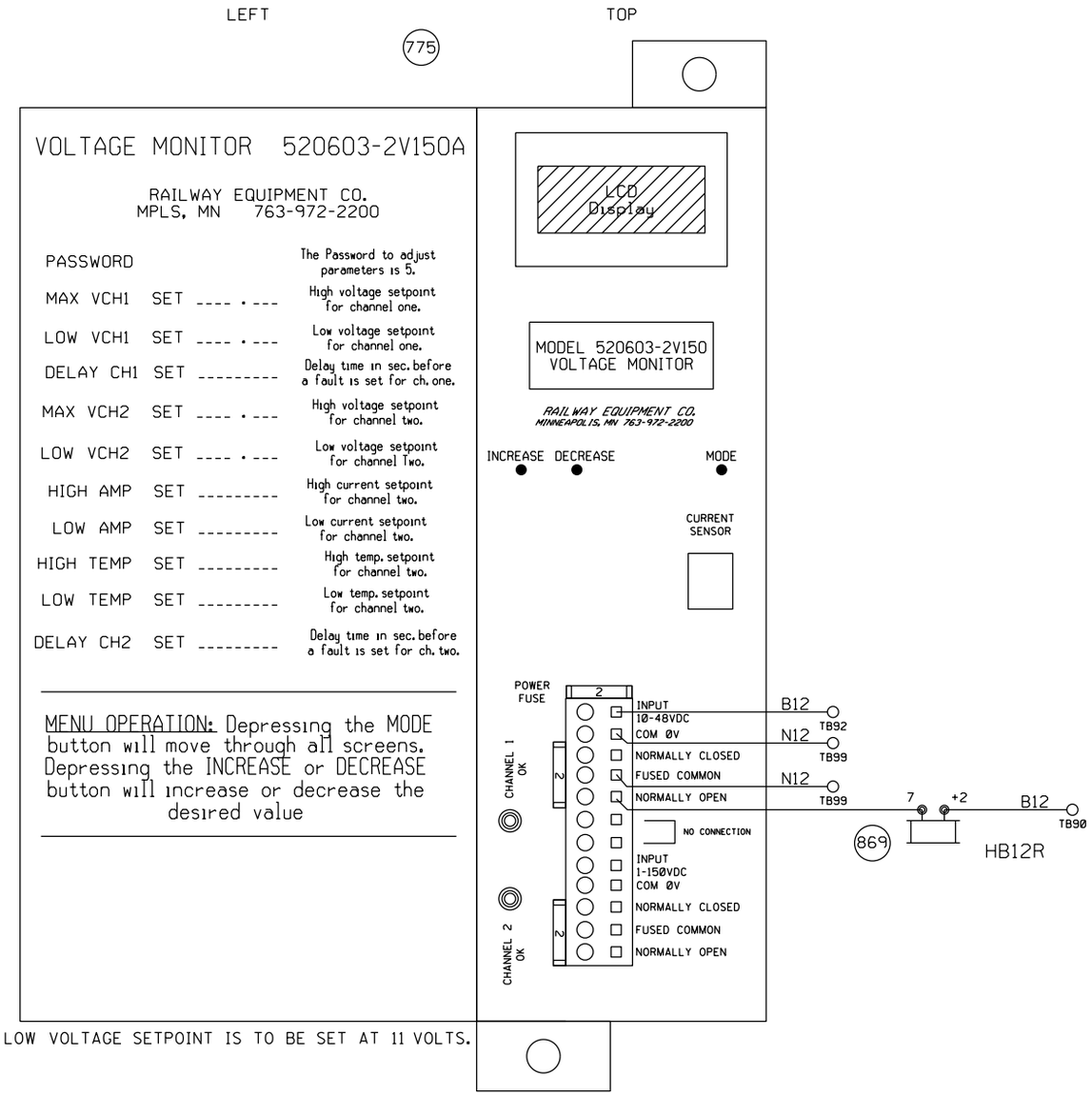

LOW VOLTAGE SETPOINT IS TO BE SET AT 11 VOLTS.

NEW SHEET

Designed: 10/11/12 TIER 3 PHASE 4 M.P.161.00 TO M.P.147.00 UPGRADE XINGS AND CP'S FOR HIGH SPEED RAIL Rec#: WO#: 22821 IS: MWK/ / /NST/MJF	MODIFICATION LEVEL		CIRCUIT MODIFICATIONS ARE NOT TO BE MADE WITHOUT AUTHORITY FROM THE OFFICE OF SIGNAL DESIGN	Date: 10/11/12	UNION PACIFIC RAILROAD	Sh.: 5A
	Q. A. LAST LEVEL CHECKED	DU		Des: NST	LAWNDALE, ILLINOIS	DOT 290978H
	LAST LEVEL MOD THIS TYPICAL	DU		Chk: MWK	LINCOLN STREET	MP: 150.07
	LAST LEVEL BY DESIGNER	DU		AFE: 22821	SPRINGFIELD SUBDIVISION	ID: CSL15007.5AX
	CHANGED FROM TYPICAL? REV 01.24.11 4K 2TKEGMS.5	Y			Office of AVP Engineering - Signal Omaha, Nebraska	

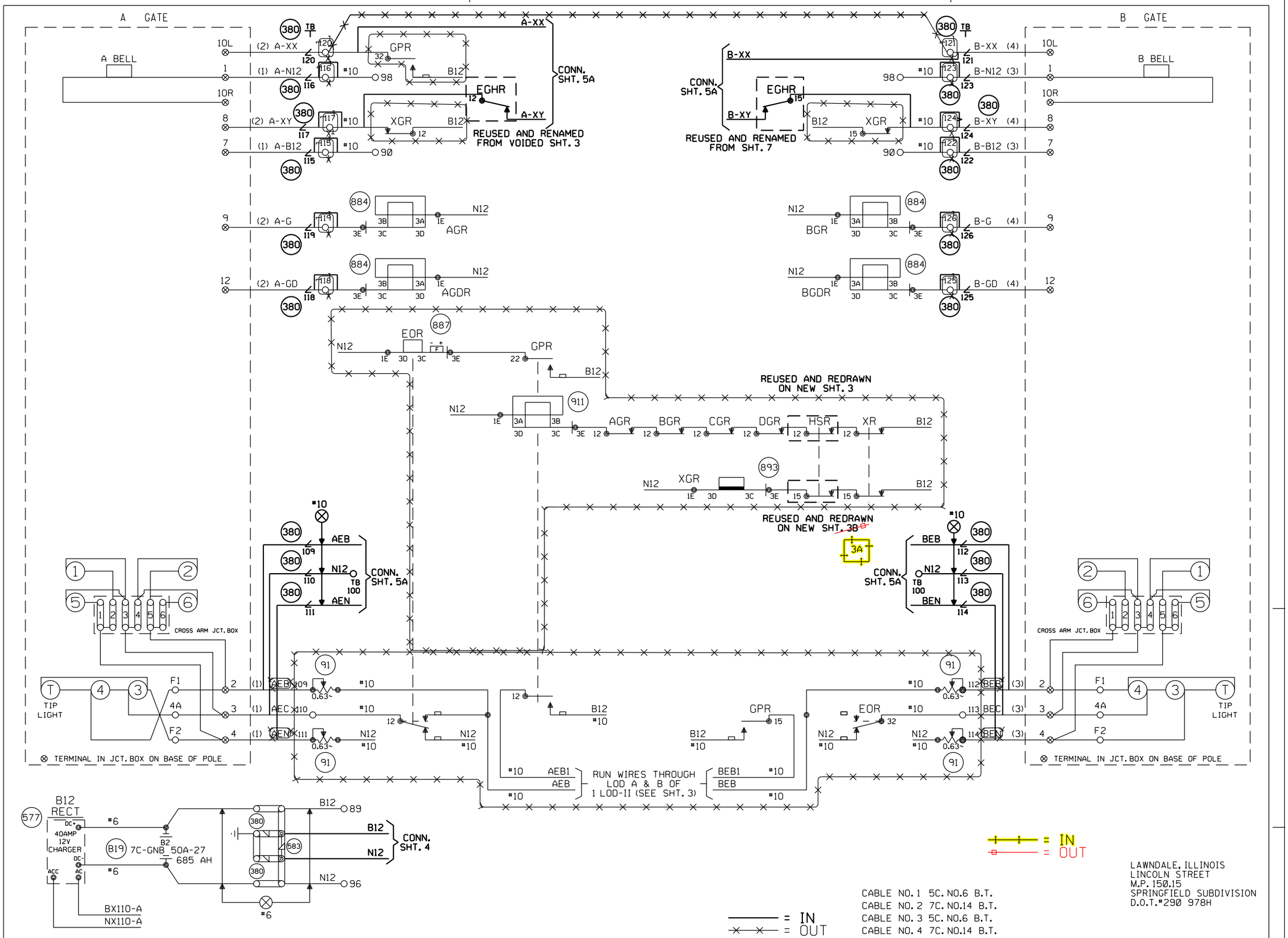

LAWNDALE, ILLINOIS
LINCOLN STREET
M.P. 150.15
SPRINGFIELD SUBDIVISION
D.O.T.#290 978H

CABLE NO. 1 5C. NO.6 B.T.
CABLE NO. 2 7C. NO.14 B.T.
CABLE NO. 3 5C. NO.6 B.T.
CABLE NO. 4 7C. NO.14 B.T.

Designed: 4/28/16
REVISE ROAD ANGLE AND LOOPS AT LINCOLN STREET M.P. 150.07
Rec#: WO#: 22821
IS: NST/VJ

Designed: 10/11/12
TIER 3 PHASE 4
M.P.161.00 TO M.P.147.00
UPGRADE XINGS AND CP'S FOR HIGH SPEED RAIL
Rec#: WO#: 22821
IS: MWK/ /NST/MJF

REV. 6-20-08
UPGRADED CROSSING PROTECTION FOR THE HIGH SPEED RAIL PROJ. FROM MAZONIA TO SPRINGFIELD
W.O. #00183
REC. #15265
3-8-06 JJF
CM/WITT/WITT/JNM

MODIFICATION LEVEL	
Q.A. LAST LEVEL CHK'D.	DA
LAST LEVEL MOD. THIS TYP.	CZ
LAST LEVEL BY DESIGNER.	DD
CHANGED FROM TYP.? Y/N	Y

CIRCUIT MODIFICATIONS ARE NOT TO BE MADE WITHOUT AUTHORITY FROM THE OFFICE OF SIGNAL DESIGN

DES: WITT.IND.
DIG: WITT.IND.
CHK: J.J.F.
A.F.E. 00183
ID= CSL15015.6X

UNION PACIFIC RAILROAD
BLOOMINGTON, ILLINOIS TO VALLEY JCT., ILLINOIS
C.T.C. CIRCUITS
Office of AVP Engineering-Signal OMAHA NEBR.

DATE 4-1-02
SHEET 6
DWG 150.15
RTE-CSL

(REV. 7-9-00) (4GTYP.5)

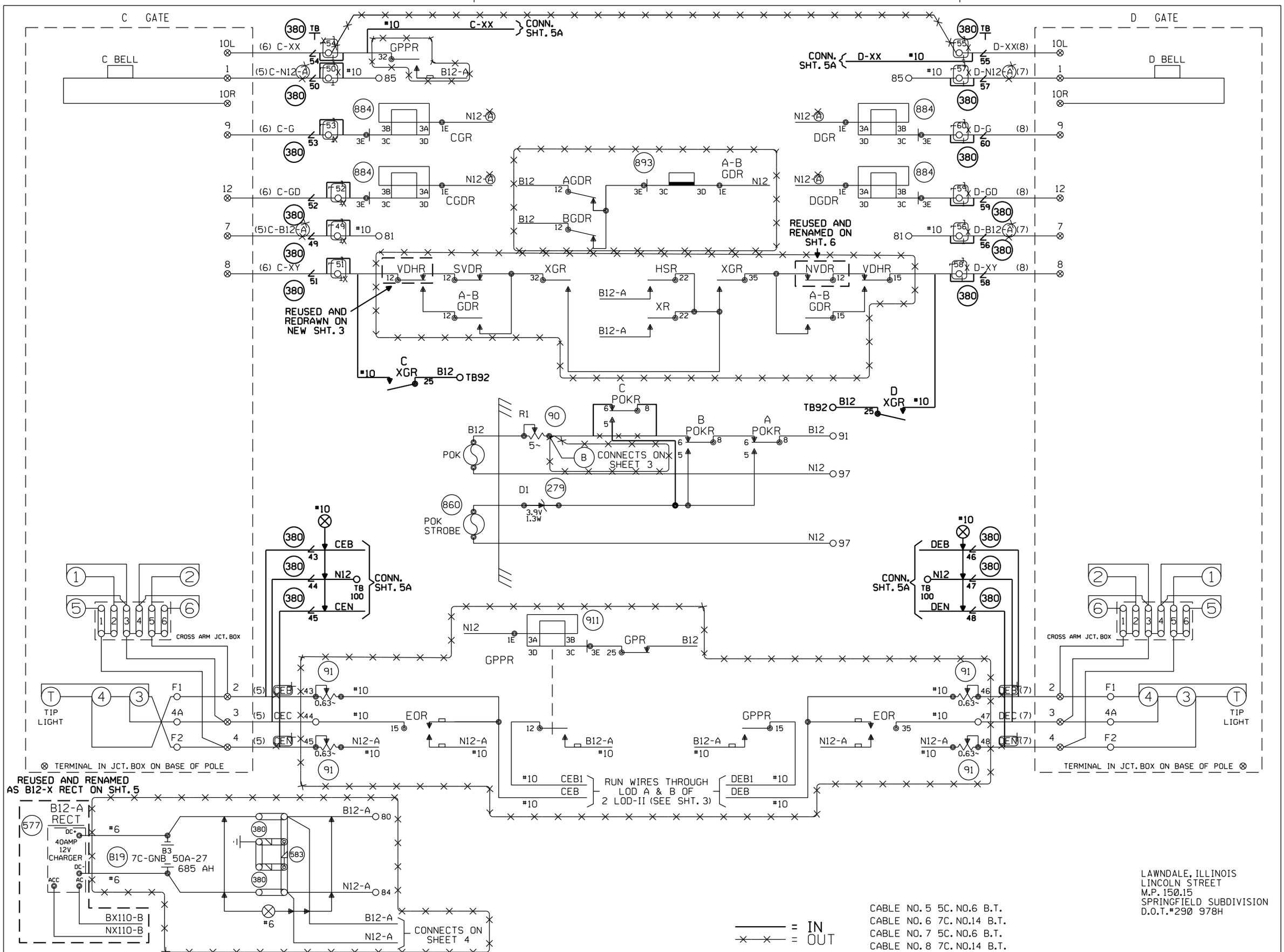

CABLE NO. 5 5C. NO.6 B.T.
CABLE NO. 6 7C. NO.14 B.T.
CABLE NO. 7 5C. NO.6 B.T.
CABLE NO. 8 7C. NO.14 B.T.

LAWNDALE, ILLINOIS
LINCOLN STREET
M.P. 150.15
SPRINGFIELD SUBDIVISION
D.O.T.#290 978H

Designed: 10/11/12
TIER 3 PHASE 4
M.P.161.00 TO
M.P.147.00
UPGRADE XINGS AND
CP'S FOR HIGH
SPEED RAIL
Rec'd: WO#: 22821
IS: MWK/
/ /NST/MJF

REV. 6-20-08
UPGRADED CROSSING
PROTECTION FOR THE
HIGH SPEED RAIL
PROJ. FROM MAZONIA
TO SPRINGFIELD
W.O. #00183
REC. #15265
3-8-06 JJF
CM/WITT/WITT/JNM

MODIFICATION LEVEL	
Q.A. LAST LEVEL CHK'D.	DA
LAST LEVEL MOD. THIS TYP.	CZ
LAST LEVEL BY DESIGNER.	DD
CHANGED FROM TYP.? Y/N	Y

CIRCUIT MODIFICATIONS ARE NOT TO BE MADE WITHOUT AUTHORITY FROM THE OFFICE OF SIGNAL DESIGN

DES: WITT.IND.
DIG: WITT.IND.
CHK: J.J.F.
A.F.E. 00183
ID= CSL15015.7X

UNION PACIFIC RAILROAD
BLOOMINGTON, ILLINOIS TO
VALLEY JCT., ILLINOIS
C.T.C. CIRCUITS
Office of AVP Engineering-Signal OMAHA NEBR.

DATE 4-1-02
SHEET 7
DWG 150.15
RTE-CSL

(REV. 7-9-00) (4GTYP.6)