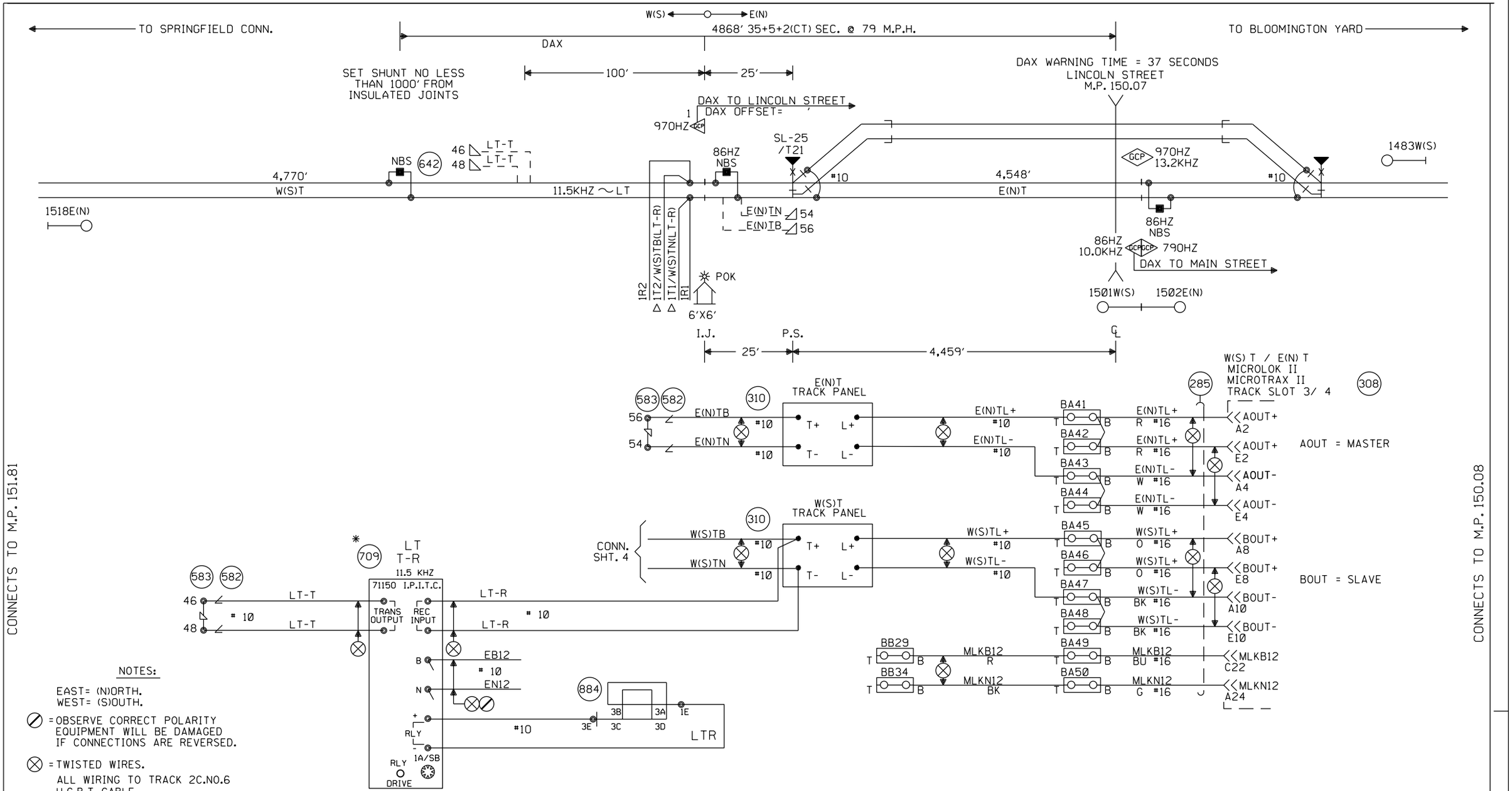

NOTES:

EAST= (N)ORTH.
WEST= (S)OUTH.

⊘ = OBSERVE CORRECT POLARITY EQUIPMENT WILL BE DAMAGED IF CONNECTIONS ARE REVERSED.

⊗ = TWISTED WIRES.

ALL WIRING TO TRACK 2C.NO.6 U.G.B.T. CABLE

ALL HOUSE WIRING TO BE NO.16 UNLESS OTHERWISE SPECIFIED

REFER TO STANDARDS DRAWING FOR CASE GROUNDING SCHEME.

ALL GROUND CONNECTIONS TO BE #6 OR LARGER, SIGNAL WIRING SHOP TO RUN ALL GROUND CONNECTIONS.

✳ - PROGRAMMABLE MODULE

PORTABLE GENERATOR EXTENSION CORD FOR 240V TO 240V IS PROVIDED AS WELL AS A 120V TO 240V ADAPTER.

△ = ENSURE TRACK POLARITY IS TRANSPOSED ACROSS ALL INSULATED JOINTS.

⧖ = TEST TERMINALS MUST BE INSTALLED ON ALL WIRING CONNECTED TO EXTERNAL CABLES (EXCEPT TRACK AND A.C. POWER WIRES).

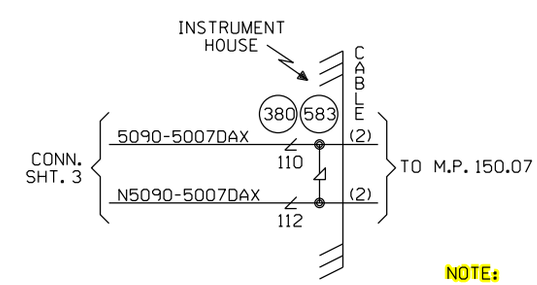

NOTE:
CHANGES TO SHT. 3A

CABLE TABULATION

CABLE NO. 1 7C#14 HOUSE TO SW. JCT. BOX
CABLE NO. 2 7C#14 HOUSE TO M.P. 150.07

= IN
= OUT

~~NEW SHEET~~

Designed: 9/28/16
REVISE ROAD ANGLE AND LOOPS AT LINCOLN STREET M.P. 150.07
Rec#: WO#: 22821
IS: /NBT / /NST/JVJ

Designed: 10/11/12
TIER 3 PHASE 4 M.P.161.00 TO M.P.147.00 UPGRADE XINGS AND CP'S FOR HIGH SPEED RAIL
Rec#: WO#: 22821
IS: MWK/ / /NST/MJF

MODIFICATION LEVEL	
Q. A. LAST LEVEL CHECKED	DU
LAST LEVEL MOD THIS TYPICAL	DU
LAST LEVEL BY DESIGNER	DU
CHANGED FROM TYPICAL?	Y

REV 8/20/10 1TMLHBINTU.1

CIRCUIT MODIFICATIONS ARE NOT TO BE MADE WITHOUT AUTHORITY FROM THE OFFICE OF SIGNAL DESIGN

Date: 10/11/12
Des: NST
Chk: MWK
AFE: 22821

UNION PACIFIC RAILROAD
LAWNDALE, ILLINOIS
ELECTRIC LOCK/REMOTE LOCATION
SPRINGFIELD SUBDIVISION
Office of AVP Engineering - Signal Omaha, Nebraska

Sh.: 1
000000R
MP: 150.90
ID: CSL15090.1S

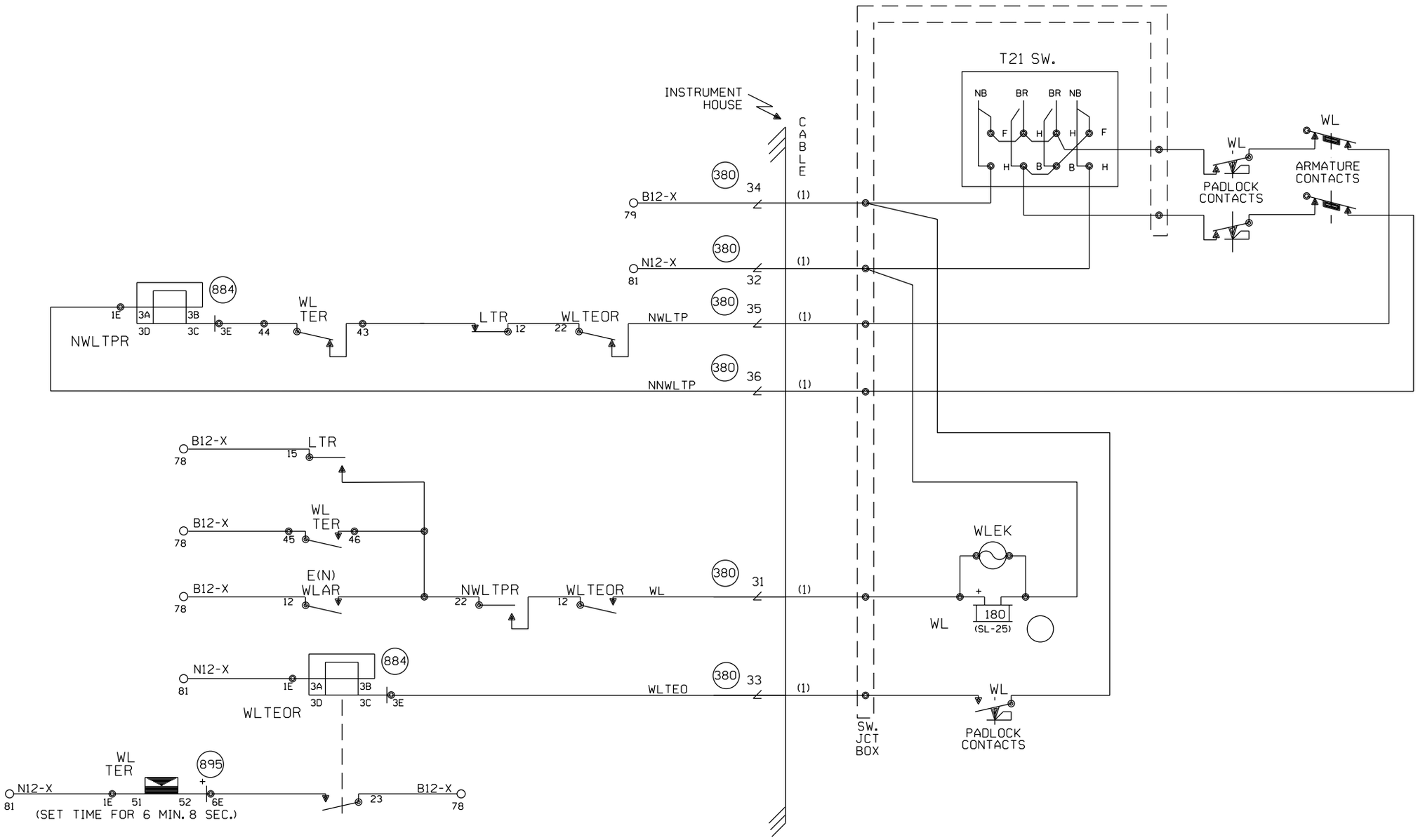

NEW SHEET

					Designed: 10/11/12 TIER 3 PHASE 4 M.P.161.00 TO M.P.147.00 UPGRADE XINGS AND CP'S FOR HIGH SPEED RAIL Rec#: WO#: 22821 IS: MWK/ / /NST/MJF	MODIFICATION LEVEL Q.A. LAST LEVEL CHECKED DU LAST LEVEL MOD THIS TYPICAL DU LAST LEVEL BY DESIGNER DU CHANGED FROM TYPICAL? Y REV 5/16/11 ELOCK10SF.1	CIRCUIT MODIFICATIONS ARE NOT TO BE MADE WITHOUT AUTHORITY FROM THE OFFICE OF SIGNAL DESIGN	Date: 10/11/12 Des: NST Chk: MWK AFE: 22821	UNION PACIFIC RAILROAD LAWNDALE, ILLINOIS ELECTRIC LOCK/REMOTE LOCATION SPRINGFIELD SUBDIVISION Office of AVP Engineering - Signal Omaha, Nebraska	Sh.: 1A 000000R MP: 150.90 ID: CSL15090.1AS

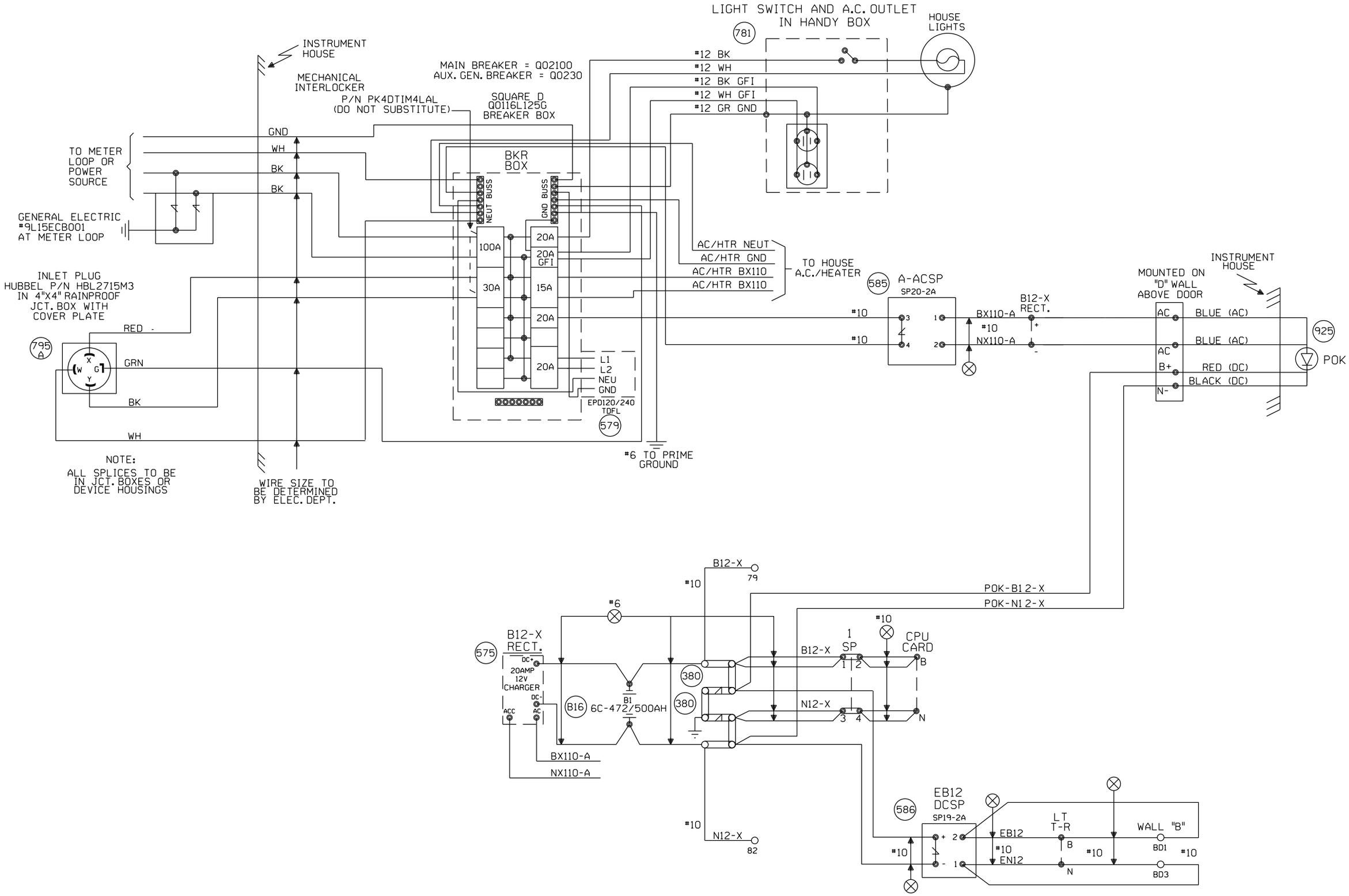

NEW SHEET

					Designed: 10/11/12 TIER 3 PHASE 4 M.P.161.00 TO M.P.147.00 UPGRADE XINGS AND CP'S FOR HIGH SPEED RAIL Rec#: WO#: 22821 IS: MWK / / /NST/MJF	MODIFICATION LEVEL		CIRCUIT MODIFICATIONS ARE NOT TO BE MADE WITHOUT AUTHORITY FROM THE OFFICE OF SIGNAL DESIGN	Date: 10/11/12	UNION PACIFIC RAILROAD	Sh.: 2
						Q.A. LAST LEVEL CHECKED	DU		Des: NST	LAWNDALE, ILLINOIS	000000R
						LAST LEVEL MOD THIS TYPICAL	DU		Chk: MWK	ELECTRIC LOCK/REMOTE LOCATION	MP: 150.90
						LAST LEVEL BY DESIGNER	DU		AFE: 22821	SPRINGFIELD SUBDIVISION	ID: CSL15090.2S
						CHANGED FROM TYPICAL?	Y			Office of AVP Engineering - Signal Omaha, Nebraska	
						REV 8/20/10 1TMLHBINTU.2					

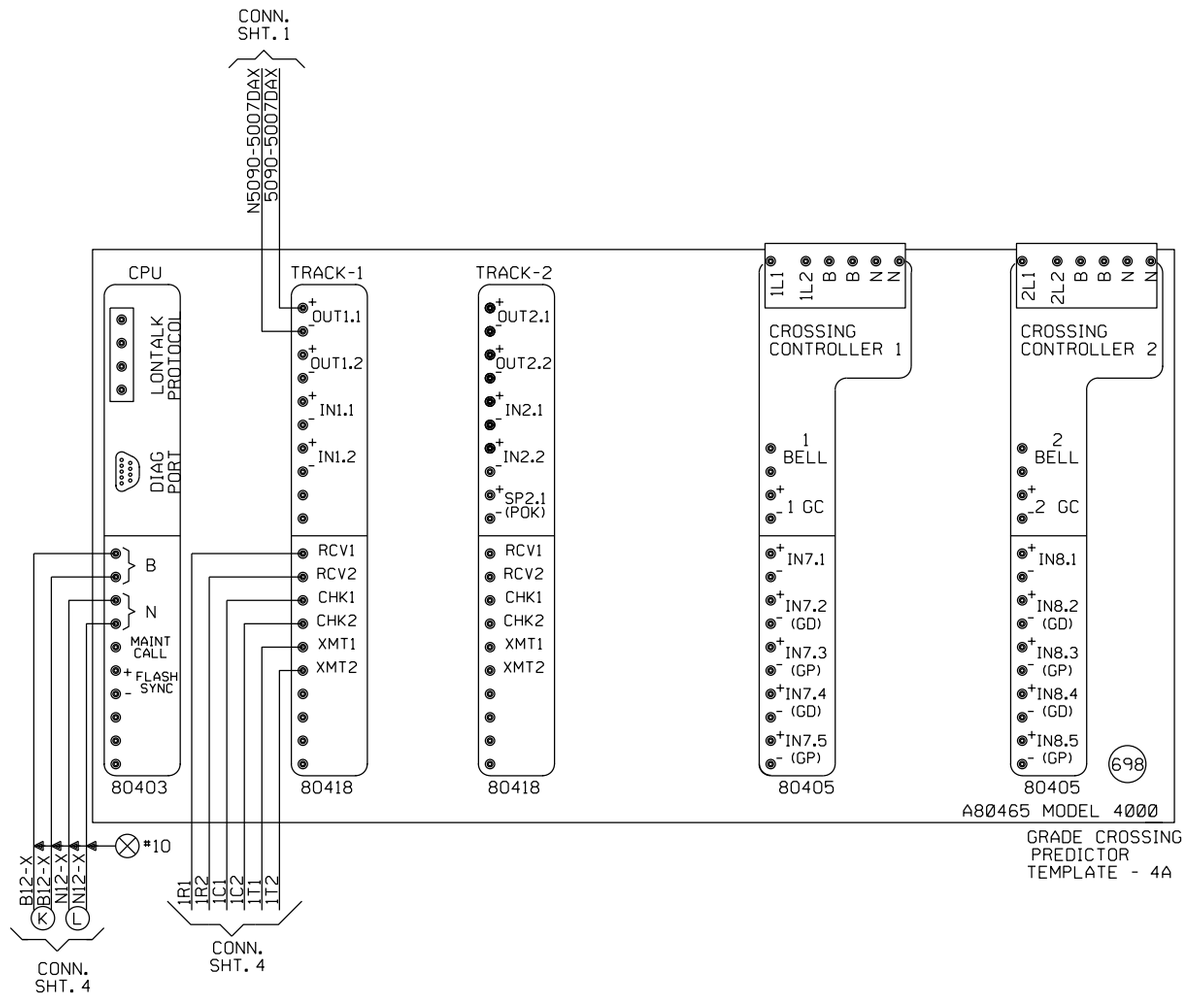

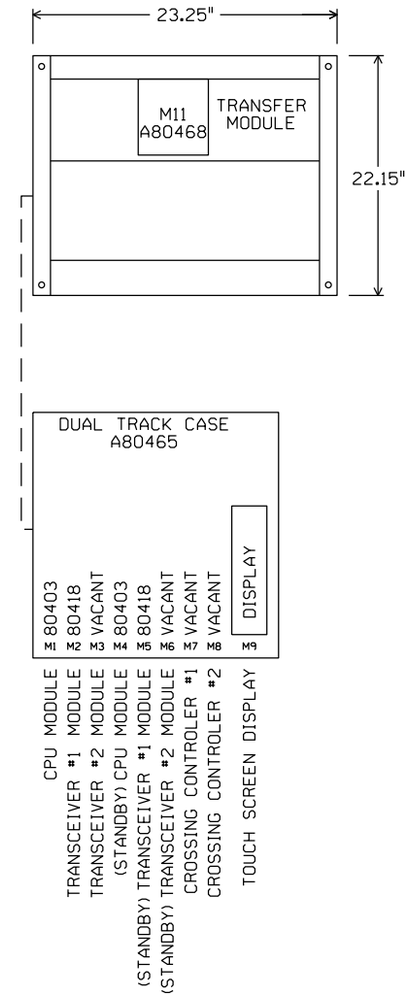

"Mf" FREQUENCY (HZ)	MAXIMUM TRANSMIT WIRE LENGTH (FEET)
86	100
114	125
156	150
211	200
285-970	250

NOTE:
EACH TRANSMITTER TO RAIL WIRE FROM XMT1 AND XMT2 MUST NOT EXCEED THE MAXIMUM LENGTH SPECIFIED IN THE TABLE SHOWN. THE RECEIVER WIRE LENGTH IS NOT CRITICAL. DOES NOT APPLY TO 6 TRACK WIRE APPLICATION.

NEW SHEET

Designed: 10/11/12
TIER 3 PHASE 4
M.P.161.00 TO M.P.147.00
UPGRADE XINGS AND CP'S FOR HIGH SPEED RAIL
Rec#: WO#: 22821
IS: MWK/ / /NST/MJF

MODIFICATION LEVEL	
Q. A. LAST LEVEL CHECKED	DU
LAST LEVEL MOD THIS TYPICAL	DU
LAST LEVEL BY DESIGNER	DU
CHANGED FROM TYPICAL?	Y

REV 01.24.11 4K 2TKGF.3

CIRCUIT MODIFICATIONS ARE NOT TO BE MADE WITHOUT AUTHORITY FROM THE OFFICE OF SIGNAL DESIGN

Date: 10/11/12
Des: NST
Chk: MWK
AFE: 22821

UNION PACIFIC RAILROAD
LAWNDALE, ILLINOIS
ELECTRIC LOCK/REMOTE LOCATION
SPRINGFIELD SUBDIVISION
Office of AVP Engineering - Signal Omaha, Nebraska

Sh.: 3
000000R
MP: 150.90
ID: CSL15090.3X

Minimum Program Steps Report

Location and SIN

DOT Number: 000000R
Milepost Number: 150.90
Site Name: LAWNDALE, IL

SIN: 762010010016 *

* Parameter is part of office check number calculation.

MCF and Template Selection

MCF Name: GCP-T6X-02-4.mcf
MCF Revision: 24
MCFCRC: 09FC363B

Template = 4A:6 Remotes (OCCN) *

* Parameter is part of office check number calculation.

Minimum Program Steps

GCP: track 1
Track 1 : GCP Frequency = 970 Hz (Set in Field,TCN)
Track 1 : Approach Distance = 1000 ft (Set in Field,TCN)

GCP: track 1 Dax A
Track 1 : Dax A Warning Time = 37 sec (OCCN) *
Track 1 : Dax A Offset Distance = 4421 ft (Set in Field)

AND: track Anding
AND 1 XR Used = No (OCCN) *

OUTPUT: assignment page 1
OUT 1.1 = T1 Dax A (OCCN) *

* Parameter is part of office check number calculation.

Check Numbers

Office Check Number: 7B1B9F4A
Config. Check Number: 49EA6EE4
(Based on MCF Revision 24)

Parameters not part of office check number calculation:

Track 1 : GCP Frequency = 970 Hz (Set in Field)
Track 1 : Approach Distance = 1000 ft (Set in Field)
Track 1 : Dax A Offset Distance = 4421 ft (Set in Field)

Comments

<none>

Configuration Package File

Filename: CSL15090_000000R.pac
Path: H:\UP\Springfield Sub Tier 3 Ph. 4 Lincoln St. CO 11-404-4\PAC Files\150.90\
Date/Time: 9/28/2016 17:39:05
DT Version: 5.7.3

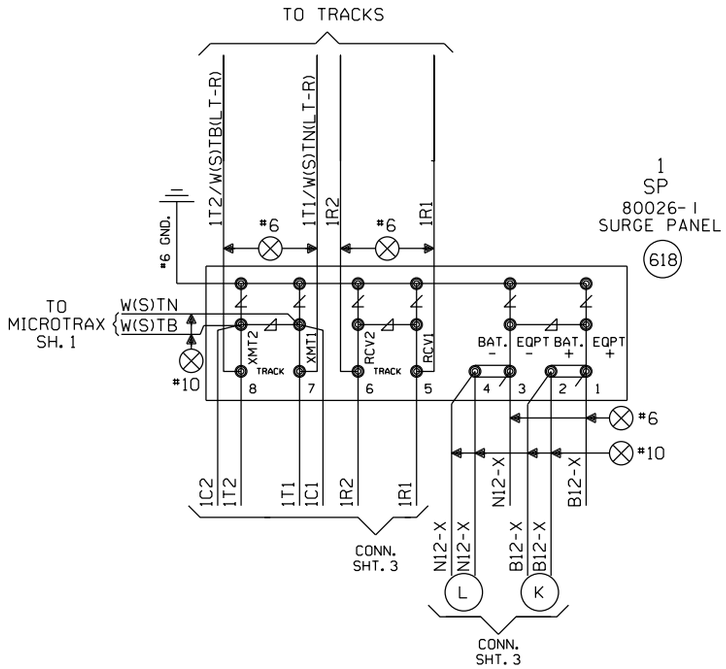

NEW SHEET

					Designed: 10/11/12 TIER 3 PHASE 4 M.P.161.00 TO M.P.147.00 UPGRADE XINGS AND CP'S FOR HIGH SPEED RAIL Rec#: WO#: 22821 IS: MWK/ / /NST/MJF	MODIFICATION LEVEL		CIRCUIT MODIFICATIONS ARE NOT TO BE MADE WITHOUT AUTHORITY FROM THE OFFICE OF SIGNAL DESIGN	Date: 10/11/12	UNION PACIFIC RAILROAD	Sh.: 4
						Q. A. LAST LEVEL CHECKED	DU		Des: NST	LAWNDALE, ILLINOIS ELECTRIC LOCK/REMOTE LOCATION SPRINGFIELD SUBDIVISION	000000R
						LAST LEVEL MOD THIS TYPICAL	DU		Chk: MWK		MP: 150.90
						LAST LEVEL BY DESIGNER	DU		AFE: 22821		ID: CSL15090.4X
						CHANGED FROM TYPICAL? REV 01.24.11 4K REMOTE.4	Y			Office of AVP Engineering - Signal Omaha, Nebraska	

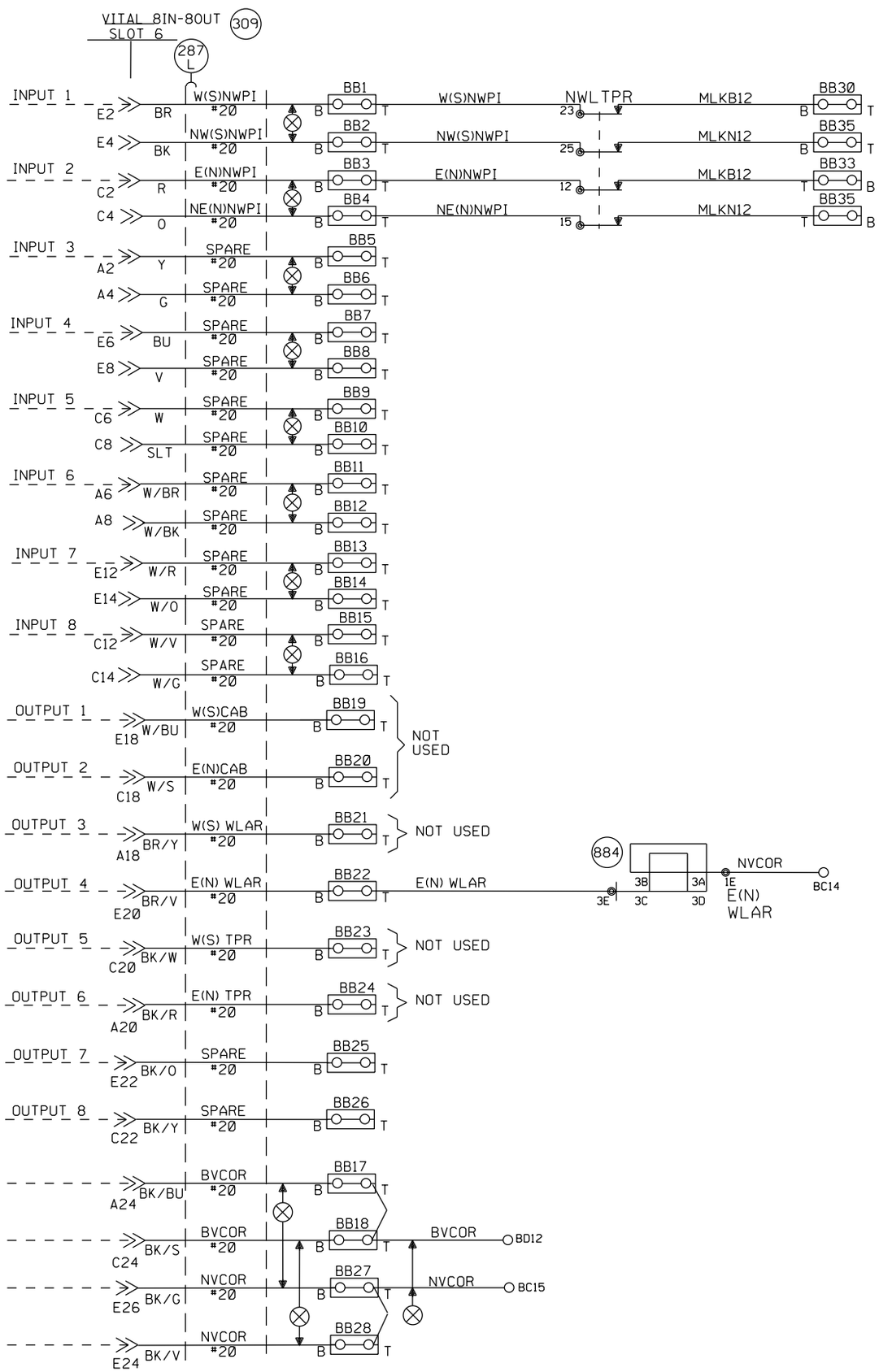

NEW SHEET

Designed: 10/11/12 TIER 3 PHASE 4 M.P.161.00 TO M.P.147.00 UPGRADE XINGS AND CP'S FOR HIGH SPEED RAIL Rec#: WO#: 22821 IS: MWK/ / /NST/MJF	MODIFICATION LEVEL		CIRCUIT MODIFICATIONS ARE NOT TO BE MADE WITHOUT AUTHORITY FROM THE OFFICE OF SIGNAL DESIGN	Date: 10/11/12 Des: NST Chk: MWK AFE: 22821	UNION PACIFIC RAILROAD LAWNDALE, ILLINOIS ELECTRIC LOCK/REMOTE LOCATION SPRINGFIELD SUBDIVISION Office of AVP Engineering - Signal Omaha, Nebraska	Sh.: 5 000000R MP: 150.90 ID: CSL15090.5S
	Q.A. LAST LEVEL CHECKED	DU				
	LAST LEVEL MOD THIS TYPICAL	DU				
	LAST LEVEL BY DESIGNER	DU				
	CHANGED FROM TYPICAL? REV 8/20/10 1TMLHBINTU.3A	Y				

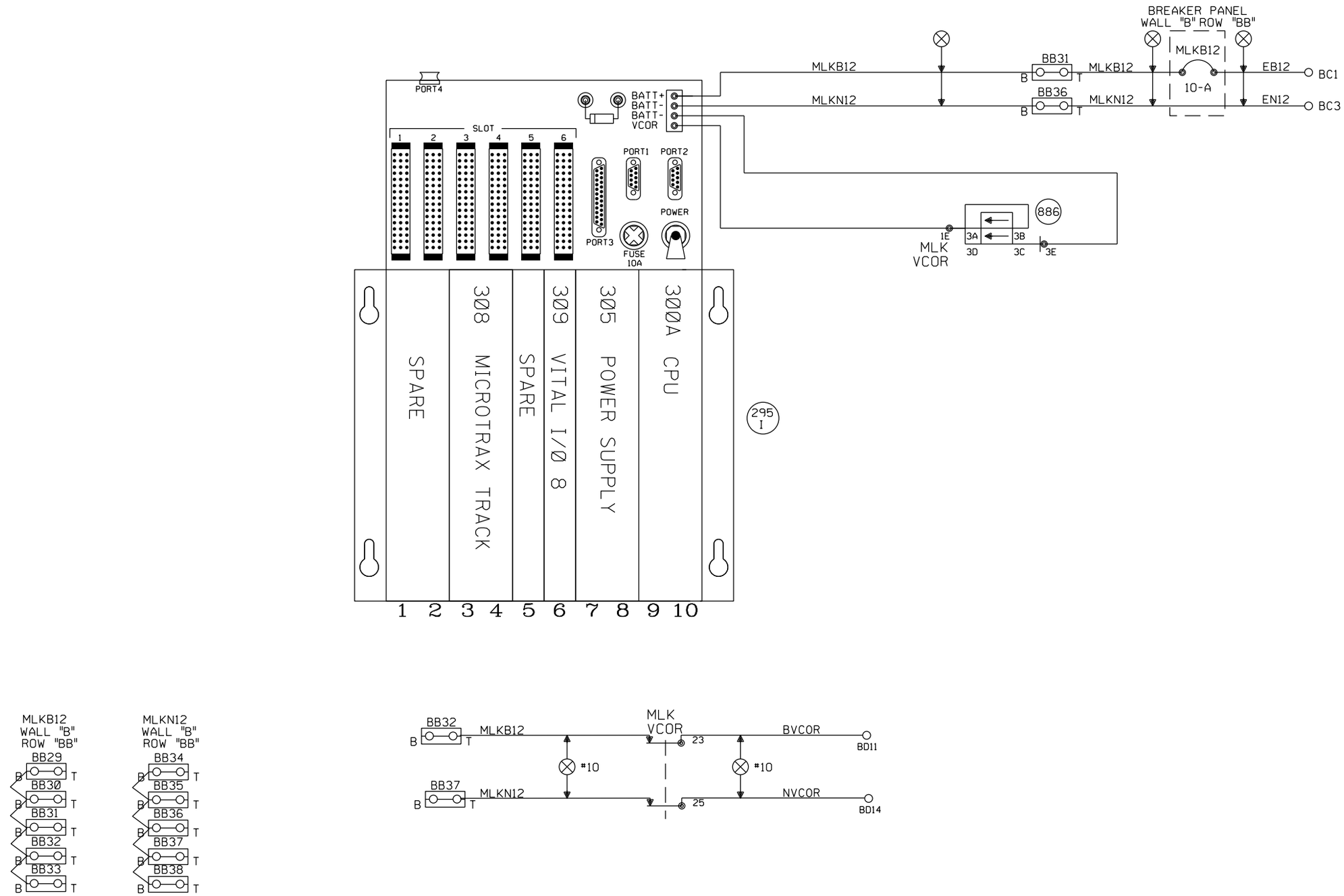

NEW SHEET

					Designed: 10/11/12 TIER 3 PHASE 4 M.P.161.00 TO M.P.147.00 UPGRADE XINGS AND CP'S FOR HIGH SPEED RAIL Rec#: WO#: 22821 IS: MWK/ / /NST/MJF	MODIFICATION LEVEL Q.A. LAST LEVEL CHECKED DU LAST LEVEL MOD THIS TYPICAL DU LAST LEVEL BY DESIGNER DU CHANGED FROM TYPICAL? Y REV 8/20/10 1TMLHBINTU.4	CIRCUIT MODIFICATIONS ARE NOT TO BE MADE WITHOUT AUTHORITY FROM THE OFFICE OF SIGNAL DESIGN	Date: 10/11/12 Des: NST Chk: MWK AFE: 22821	UNION PACIFIC RAILROAD LAWNDALE, ILLINOIS ELECTRIC LOCK/REMOTE LOCATION SPRINGFIELD SUBDIVISION Office of AVP Engineering - Signal Omaha, Nebraska	Sh.: 6 000000R MP: 150.90 ID: CSL15090.6S

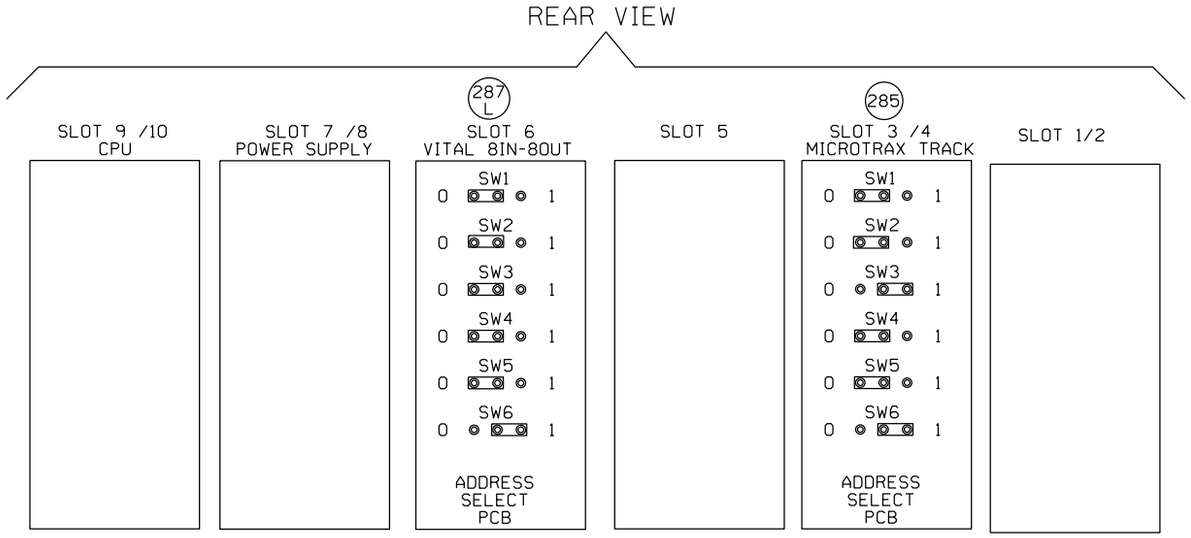

NOTE: FOR PTC COMPATIBLE CPU JUMPER SETTINGS REFER TO
ANSALDO MANUAL 1D1.0028 PAGE 1-26 1-27 1-28 REV.1 DATE 8/2009

ML8RRH REV. B

15 SEC SLOW PICK ET TO PREVENT JOINT HOP	
15 SEC SLOW PICK WT TO PREVENT JOINT HOP	
PROGRAM ID 1 (BINARY 1)	
PROGRAM ID 2 (BINARY 2)	
PROGRAM ID 3 (BINARY 4)	X
PROGRAM ID 4 (BINARY 8)	
PROGRAM ID 5 (BINARY 16)	
PROGRAM ID 6 (BINARY 32)	X
PROGRAM ID 7 (BINARY 64)	
PROGRAM ID 8 (BINARY 128)	
CODE P?	

NEW SHEET

Designed: 10/11/12
TIER 3 PHASE 4
M.P.161.00 TO
M.P.147.00
UPGRADE XINGS AND
CP'S FOR HIGH
SPEED RAIL
Rec#: WO#: 22821
IS: MWK/
/ /NST/MJF

MODIFICATION LEVEL	
Q. A. LAST LEVEL CHECKED	DU
LAST LEVEL MOD THIS TYPICAL	DU
LAST LEVEL BY DESIGNER	DU
CHANGED FROM TYPICAL?	Y

REV 8/20/10 1TMLHBINTU.5

CIRCUIT MODIFICATIONS ARE NOT TO BE MADE WITHOUT AUTHORITY FROM THE OFFICE OF SIGNAL DESIGN

Date: 10/11/12
Des: NST
Chk: MWK
AFE: 22821

UNION PACIFIC RAILROAD

LAWNDALE, ILLINOIS
ELECTRIC LOCK/REMOTE LOCATION
SPRINGFIELD SUBDIVISION

Office of AVP Engineering - Signal Omaha, Nebraska

Sh.: 7
000000R
MP: 150.90
ID: CSL15090.7S

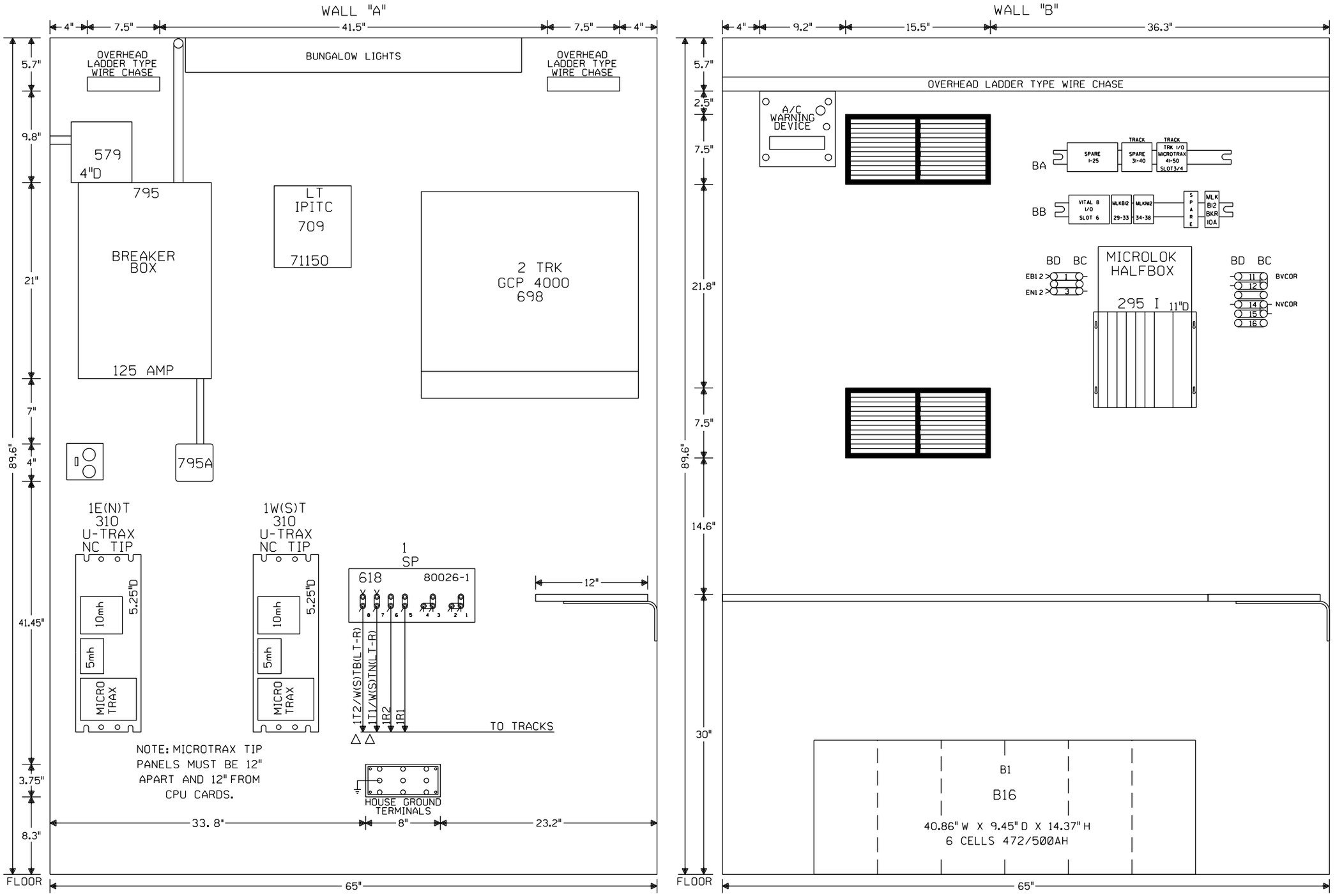

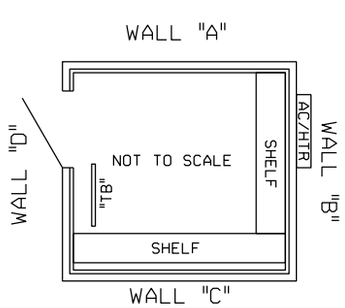

△ = FIELD VERIFY POLARITY

NOTE: ALL DIMENSIONS SHOWN ARE APPROXIMATE.

NEW SHEET

Designed: 10/11/12
TIER 3 PHASE 4
M.P.161.00 TO M.P.147.00
UPGRADE XINGS AND CP'S FOR HIGH SPEED RAIL
Rec*: WO*: 22821
IS: MWK/ / /NST/MJF

CIRCUIT MODIFICATIONS ARE NOT TO BE MADE WITHOUT AUTHORITY FROM THE OFFICE OF SIGNAL DESIGN

Date:	10/11/12
Des:	NST
Chk:	MWK
AFE:	22821

UNION PACIFIC RAILROAD

LAWNDALE, ILLINOIS
ELECTRIC LOCK/REMOTE LOCATION
SPRINGFIELD SUBDIVISION

Office of AVP Engineering - Signal — Omaha, Nebraska

Sh.:	8
	000000R
MP:	150.90
ID:	CSL15090.8S

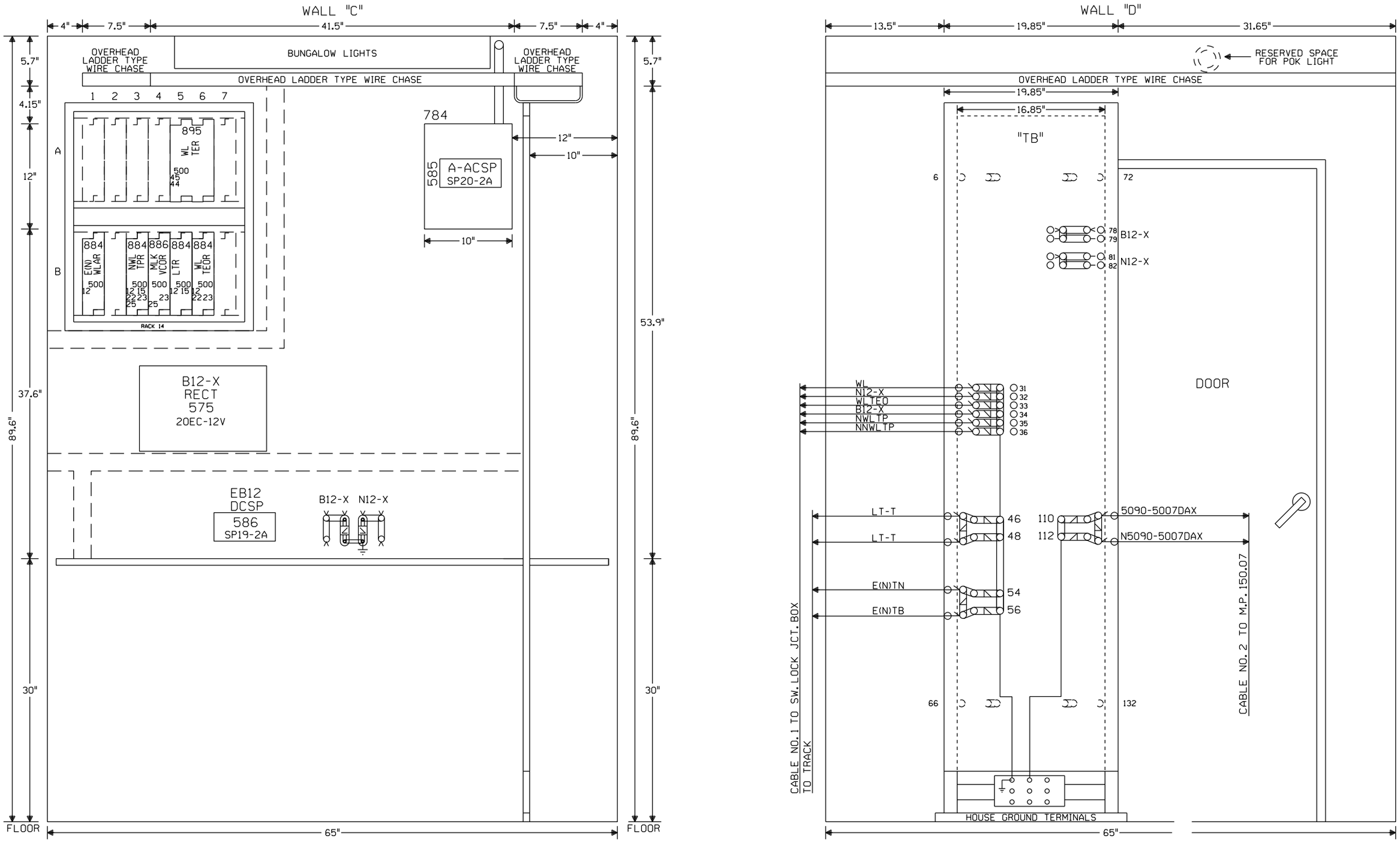

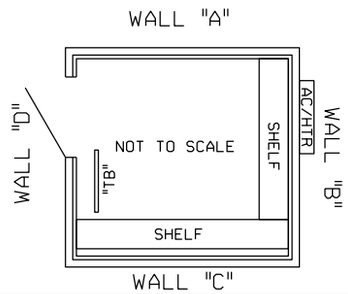

NOTE: ALL DIMENSIONS SHOWN ARE APPROXIMATE.

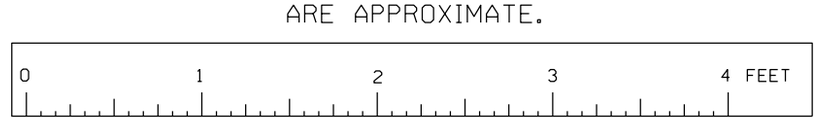

SCALE: 1.5 INCHES = 1 FOOT

NEW SHEET

Designed: 10/11/12 TIER 3 PHASE 4 M.P.161.00 TO M.P.147.00 UPGRADE XINGS AND CP'S FOR HIGH SPEED RAIL Rec#: WO#: 22821 IS: MWK / / /NST/MJF	CIRCUIT MODIFICATIONS ARE NOT TO BE MADE WITHOUT AUTHORITY FROM THE OFFICE OF SIGNAL DESIGN	Date: 10/11/12 Des: NST Chk: MWK AFE: 22821	**UNION PACIFIC RAILROAD** LAWNDALE, ILLINOIS ELECTRIC LOCK/REMOTE LOCATION SPRINGFIELD SUBDIVISION Office of AVP Engineering-Signal Omaha, Nebraska	Sh.: 9 000000R MP: 150.90 ID: CSL15090.9S

Minimum Program Steps Report

Location and SIN

DOT Number: 000000R
Milepost Number: 150.90
Site Name: LAWNDALE, IL

SIN: 762010010016 *

* Parameter is part of office check number calculation.

MCF and Template Selection

MCF Name: GCP-T6X-02-4.mcf
MCF Revision: 24
MCFCRC: 09FC363B

Template = 4A:6 Remotes (OCCN) *

* Parameter is part of office check number calculation.

Minimum Program Steps

TEMPLATE: track 1-Remote Dax
Track 1 : GCP Frequency = 970 Hz (Field,TCN)
Track 1 : Approach Distance = 1000 ft (Set in Field,TCN)
Track 1 : Dax A Warning Time = 37 sec (OCCN) *
Track 1 : Dax A Offset Distance = 4422 ft (Set in Field)
Track 1 : GCP Transmit Level = Medium (Set in Field,TCN)

TEMPLATE: track Anding
AND 1 XR Used = No (OCCN) *

TEMPLATE: OOS
OOS Timeout = 1 hrs (Set in Field)

TEMPLATE: OP assignment 1
OUT 1.1 = T1 Dax A (OCCN) *

ADVANCED: site options
Daylight Savings = Off (Set in Field)

* Parameter is part of office check number calculation.

Check Numbers

Office Check Number: 7B1B9F4A
Config. Check Number: 76F8920A
(Based on MCF Revision 24)

Parameters not part of office check number calculation:

Track 1 : GCP Frequency = 970 Hz
Track 1 : Approach Distance = 1000 ft (Set in Field)
Track 1 : Dax A Offset Distance = 4422 ft (Set in Field)
Track 1 : GCP Transmit Level = Medium (Set in Field)
OOS Timeout = 1 hrs (Set in Field)
Daylight Savings = Off (Set in Field)

Comments

<none>

Configuration Package File

Filename: CSL15090_000000R.pac
Path: H:\UP\Springfield Sub Tier 3 Ph. 4 11-404-4\PAC Files\150.90\
Date/Time: 11/24/2014 16:18:43

TO BE VOIDED
09/28/16
W.O. 22821 NST/JVJ

NEW SHEET

				Designed: 10/11/12 TIER 3 PHASE 4 M.P.161.00 TO M.P.147.00 UPGRADE XINGS AND CP'S FOR HIGH SPEED RAIL Rec#: WO#: 22821 IS: / / /NST/MJF	**NOTE: Actual OFFSET and ISLAND distances must be verified by field personnel.**	CIRCUIT MODIFICATIONS ARE NOT TO BE MADE WITHOUT AUTHORITY FROM THE OFFICE OF SIGNAL DESIGN	Date: 10/11/12 Des: NST Chk: AFE: 22821	**UNION PACIFIC RAILROAD** LAWNDALE, ILLINOIS ELECTRIC LOCK/REMOTE LOCATION SPRINGFIELD SUBDIVISION Office of AVP Engineering - Signal Omaha, Nebraska	Sh.: 3A 000000R MP: 150.90 ID: CSL15090.3AX