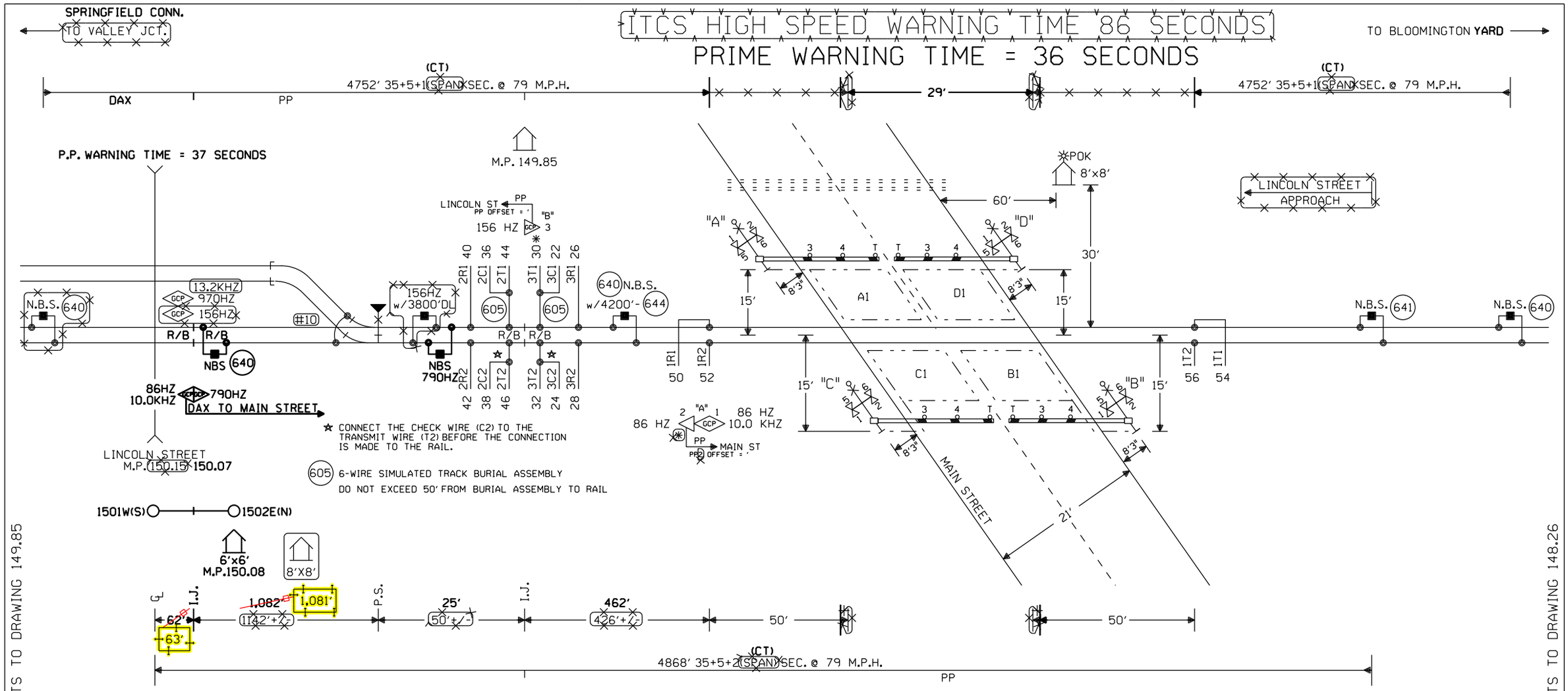

NOTES:

⊗ = TWISTED WIRES
INSULATED 1 TWIST PER FT.
ALL TRACK WIRES 2C. #6

TRANSMITTER AND RECEIVER LEADS TO BE SEPARATED BY AT LEAST 12" IN TRENCH, LENGTHS SHOULD NOT EXCEED MANUFACTURES RECOMMENDATION.

TOP OF FOUNDATION TO BE AT SAME ELEVATION AS THE SURFACE OF THE TRAVELED WAY & NO MORE THAN 4" ABOVE THE SURFACE OF THE GROUND.

ALL BUNGALOW WIRING TO BE #16 AWG FLEX UNLESS OTHERWISE SPECIFIED EXCEPT ALL GROUND WIRE TO BE #6 AWG FLEX OR LARGER.

ALL WIRING IN GATE MECHANISM TO BE #10 "AWG FLEX".

REFER TO UP STANDARD DWG FOR BUNGALOW GROUNDING.

DO NOT USE 7 CELLS OF B12 BATTERY UNLESS REQUIRED TO MAINTAIN MINIMUM LAMP VOLTAGE.

ALL LIGHTS TO BE 12" ROUNDELS.

= = = = = = 4" X 70' CONDUIT

LIGHTS: LED LIGHTS

GATE A,C: 23'
GATE B,D: 23'

CRTU CELLEMETRY

✳ = WIRE GCP AS A SEMI-BIDIRECTIONAL UNIT

EXIT GATE MANAGEMENT SYSTEM (EGMS) LOOP LOCATION:

1.) 12" FROM CONCRETE CROSSING PANEL. MAY VARY FROM 6" TO 12" DEPENDING ON PAVEMENT QUALITY.

2.) 2' FROM CROSSING CENTERLINE.

3.) 3.5' FROM GATE ARM.

4.) 2' FROM THE EDGE OF THE TRAVELED WAY. MAY BE INCREASED UP TO A MAXIMUM OF 5' WHERE AN IMPROVED SHOULDER OR OTHER EXISTS.

5.) MAXIMUM LOOP WIDTH NOT TO EXCEED 8' AND MINIMUM WIDTH NOT TO BE LESS THAN 3'.

— - - = EGMS LOOP

NOTE:
CHANGES TO SHT. 1

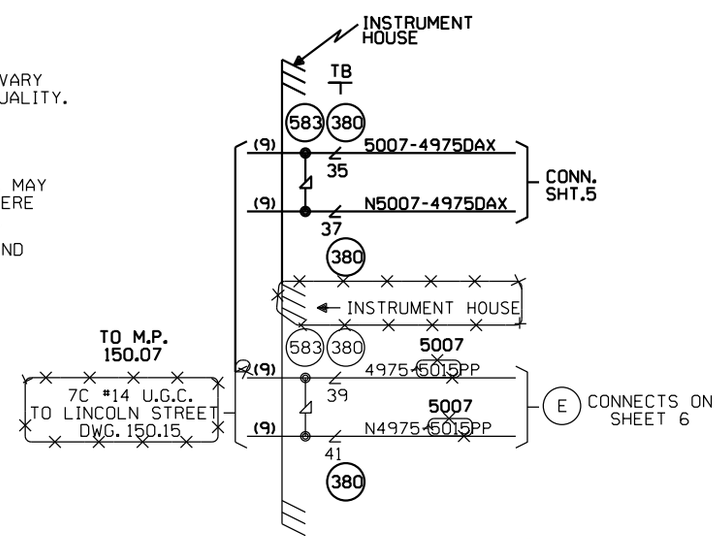

= IN

= EXISTING/REVISE ORIGINALS IF A.C.'D

= IN
= OUT

= IN
= OUT

S ◄—○—► N

LAWNDALE, ILLINOIS
MAIN STREET
M.P. 149.75
SPRINGFIELD SUBDIVISION
D.O.T.#290 977B

CABLE TABULATION

CABLE NO. 9 7C#14 U.G.B.T. HOUSE TO M.P. 150.07 (EXISTING)

Designed: 9/28/16 REVISE ROAD ANGLE AND LOOPS AT LINCOLN STREET M.P. 150.07 Rec#: IS: WO#: 22821 /NBT /NST/JVJ	Designed: 03/06/15 TIER 3 PHASE 4 M.P. 161.00 TO M.P. 147.00 HSR SCOPE CHANGE Rec#: IS: WO#: 22821 MWK/ /NST/JVJ	Designed: 10/11/12 TIER 3 PHASE 4 M.P.161.00 TO M.P.147.00 UPGRADE XINGS AND CP'S FOR HIGH SPEED RAIL Rec#: IS: WO#: 22821 /MWK /NST/MJF	REV. 2-20-08 UPGRADED CROSSING PROTECTION FOR THE HIGH SPEED RAIL PROJ. FROM MAZONIA TO SPRINGFIELD. AFE #00183 REC. #15252 I.S. 3-11-06 JJF CM/WITT/WITT/JNM	MODIFICATION LEVEL		CIRCUIT MODIFICATIONS ARE NOT TO BE MADE WITHOUT AUTHORITY FROM THE OFFICE OF SIGNAL DESIGN	DES: WITT.IND.	UNION PACIFIC RAILROAD BLOOMINGTON, ILLINOIS TO VALLEY JCT., ILLINOIS C.T.C. CIRCUITS	DATE 4-1-02
				Q.A. LAST LEVEL CHK'D.	DA		DIG: WITT.IND.		SHEET 1
				LAST LEVEL MOD. THIS TYP.	CZ		CHK: J.J.F.		DWG 149.75
				LAST LEVEL BY DESIGNER.	DD		A.F.E. 00183		RTE-CSL
				CHANGED FROM TYP.? Y/N	Y		ID= CSL14975.1X	Office of AVP Engineering-Signal OMAHA NEBR.	

(REV. 7-9-00) (1TKBG.1)

The Incremental Train Control System (ITCS) provides advance activation of the crossings for all ITCS equipped trains travleing over 20 M.P.H. The ITCS is a communication-based train control system that provides enforcement and advanced start of public crossings. ITCS vitally monitors the existing crossings as a basis for determining permissible action and uses a radio frequency (RF) data link with a vital communication protocol to send wayside status to the trains. Enforcement of speed limits is performed vitally by an onboard computer (OBC). The wayside components monitor Crossing Warning Systems and relay the information to the train over the RF network as a list of device statuses. The OBC interprets the statuses and enforces all speed limits and braking based upon those statuses. The OBC must receive an acknowledgment from the crossing, verifying the proper operation of the Crossing Warning System, before the train can proceed at high speed through the crossings aprroach circuit. This is the High Speed OK (HSOK) status. If this status is not true, a 79 M.P.H. target speed limit is placed at the start of the conventional track circuit based approach of the crossing.
Conditions that would cause this to happen are:

- The Advance Start Enable test switch is open.
- The Crossing has been activated longer than 3.5 minutes but less than 5 minutes, without a train present on the crossing.
- The loss of communitations longer than 2 minutes 30 seconds.

The most restrictive status in the health status. If the health status for the crossing is not true a 15 M.P.H. target speed limit is placed at the leading island wires of the crossing.
Conditions that would cause this to happen are:

- Activation failure detected. (No vertical gate contact indicating de-energized within 10 seconds of request for crossing to activate)

  If this failure has occurred it requires the advance start enable test switch to be opened to reset the box before any further High Speed operation is allowed.
- The crossing has been activated longer than 5 minutes, without a train present on the crossing.
- The vehicle detector does not indicate clear, or the Gate Down circuit not energized within 20 seconds (Field adjustable) of crossing being requested to activate.
- The vehicle detector health not true. This input consists of the detector loop health, EGMS health, Battery health, and Long Term Occupancy of Vehicle Detector Loop (Greater than 1 minute.)

NEW SHEET

							Designed: 10/11/12 TIER 3 PHASE 4 M.P.161.00 TO M.P.147.00 UPGRADE XINGS AND CP'S FOR HIGH SPEED RAIL Rec#: WO#: 22821 IS: /MWK / /NST/MJF	CIRCUIT MODIFICATIONS ARE NOT TO BE MADE WITHOUT AUTHORITY FROM THE OFFICE OF SIGNAL DESIGN	Date: 10/11/12 Des: NST Chk: MWK AFE: 22821	UNION PACIFIC RAILROAD LAWNDALE, ILLINOIS MAIN STREET SPRINGFIELD SUBDIVISION Office of AVP Engineering - Signal Omaha, Nebraska	Sh.: 1A DOT 290977B MP: 149.75 ID: CSL14975.1AX

GENERAL ELECTRIC
#9L15ECB001
AT METER LOOP

TO METER LOOP OR POWER SOURCE
BK
BK
WH

WIRE SIZE TO BE DETERMINED BY ELECTRICAL DEPT.

NOTE:
ALL SPLICES TO BE IN JCT. BOXES OR DEVICE HOUSINGS

USE GENERATOR RECEPTABLE LEVITON #2613 L5-30R

INLET PLUG
HUBBEL P/N HBL2615M3
IN 4"X4" RAINPROOF
JCT. BOX WITH
COVER PLATE

795 A
AUX. GEN.

RED
GRN
BK
WH

PRIME GND

MECHANICAL INTERLOCKER
P/N PK4DTIM4LAL
(DO NOT SUBSTITUTE)

SQUARE D
Q0112L125G
BREAKER BOX

795
BKR BOX

MAIN BREAKER Q02100
100A
30A
2 POLE
20A

AUX. GEN. BREAKER Q0230

30A
30A
30A
20A
GFI
20A

S/N
GND
NEU
L1
L2
EPD120/240
TDFL

579

#6 PRIME GROUND

585
B ACSP
SP20-2A
#9 BK.
#9 WH.
#6 PRIME GROUND
BX110-B
NX110-B
#10

585
A ACSP
SP20-2A
#9 BK.
#9 WH.
#6 PRIME GROUND
BX110-A
NX110-A
#10

#10
RECT
B12-A
RECT
B12-XA
B POKR
856

#10
RECT
B12-X
RECT
B12
A POKR
856

LIGHT SWITCH AND A.C. OUTLET
IN HANDY BOX
781

HOUSE LIGHTS

#12 BK
#12 BK GFI
#12 WH GFI
#12 GR GND
#12 WH

585
C-ACSP
SP20-2A
#10
#10
BX110-C
NX110-C
#10
B12-F RECT.
856
C POKR

BK
THERMOSTAT
BK
FAN
WH

REUSED AND REDRAWN ON NEW SHT.11B

EGMS TB2
B T

B12	AGR	AGR IN+	21
B12	AGDR	AGDR IN+	22
B12	BGR	BGR IN+	23
B12	BGDR	BGDR IN+	24
B12	CGR	CGR IN+	25
B12	CGDR	CGDR IN+	26
B12	DGR	DGR IN+	27
B12	DGDR	DGDR IN+	28
			29
			30
			31
			32
			33
			34
			35
			36

32
N12
99

REUSED AND REDRAWN ON NEW SHT.11B
884
VDHR
1E 3A 3B 3D 3C 3E

REUSED AND RENAMED AS VDR ON NEW SHT.11B
884
SVDR
1E 3A 3B 3D 3C 3E

REUSED AND RENAMED AS EGHR ON NEW SHT.11B
884
NVDR
1E 3A 3B 3D 3C 3E

REUSED AND REDRAWN ON NEW SHT.11B
B12 XR 35
HSR 32
B12 ISLR 25
N12 99

RACK#1 TB1
13
14
15
11
12

RACK#1 TB2
13
14
15
11
12

EGMS TB2
B T

VDHR	61	
NVDHR	62	
SVDR	53	
NSVDR	54	
NVDR	55	
NNVDR	56	
XR IN+	15	
XR IN-	16	
ISL1 IN+	17	
ISL1 IN-	18	
B12-X	1	
N12-X	2	

884
HSR
1E 3A 3B 3D 3C 3E

B12 AGR 23 BGR 23 CGR 23 DGR 23

CONNECTS ON SHEET 3
C

B12 HB12R 1 HB12AR 1 LTOR 12
TB92

B12 VDHR 23

B12 AGDR 23 BGDR 23 CGDR 23 DGDR 23

B12 GPR 35

B12 ISLR 23

B12 NVDR 23

B12 SVDR 23 VDR
B12

B12 XR 25

RACK#1 TB1
1
2
3
4
5
6
7
8
9
10

TB2

HSR	A	
NHSR	B	
G	C	
NG	D	
VDH	E	
NVDH	F	
GD	G	
NGD	H	
ISL	K	
NISL	L	
N-SVD	I	
NN-SVD	J	
XR	M	
NXR	N	

TO HIGH SPEED RAIL EQUIPMENT CONNECT ON SHT. 10 SHT. 9B

= EXISTING/ REVISE ORIGINALS IF A.C.'D

= IN
= OUT

= IN
= OUT

LAWNDALE, ILLINOIS
MAIN STREET
M.P. 149.75
SPRINGFIELD SUBDIVISION
D.O.T.#290 977B

EGMS NOTES:

1.) EGMS ISL1 INPUT: "AND" ISLAND INPUTS FROM ALL TRACKS.

2.) ALL WIRING TO EGMS TO BE #16 AWG FLEX.

O??O = 2 POSITION WAGO BLOCK

			Designed: 10/11/12 TIER 3 PHASE 4 M.P.161.00 TO M.P.147.00 UPGRADE XINGS AND CP'S FOR HIGH SPEED RAIL Rec#: WO#: 22821 IS: /MWK / /NST/MJF	02-24-09 INSTALL MONITOR RACK FOR XINGS W.O. 87933 MAS	REV. 2-20-08 UPGRADED CROSSING PROTECTION FOR THE HIGH SPEED RAIL PROJ. FROM MAZONIA TO SPRINGFIELD. AFE #00183 REC. #15252 I.S. 3-11-06 JJF JM/WITT/WITT/JNM	MODIFICATION LEVEL		CIRCUIT MODIFICATIONS ARE NOT TO BE MADE WITHOUT AUTHORITY FROM THE OFFICE OF SIGNAL DESIGN	DES: WITT.IND. DIG: WITT.IND. CHK: J.J.F. A.F.E. 00183 ID= CSL14975.2X	UNION PACIFIC RAILROAD BLOOMINGTON, ILLINOIS TO VALLEY JCT., ILLINOIS C.T.C. CIRCUITS Office of AVP Engineering-Signal OMAHA NEBR.	DATE 4-1-02 SHEET 2 DWG 149.75 RTE-CSL
						Q.A. LAST LEVEL CHK'D.	DA				
						LAST LEVEL MOD. THIS TYP.	CZ				
						LAST LEVEL BY DESIGNER.	DD				
						CHANGED FROM TYP.? Y/N	Y				

(REV. 7-9-00) (HCA4C.2)

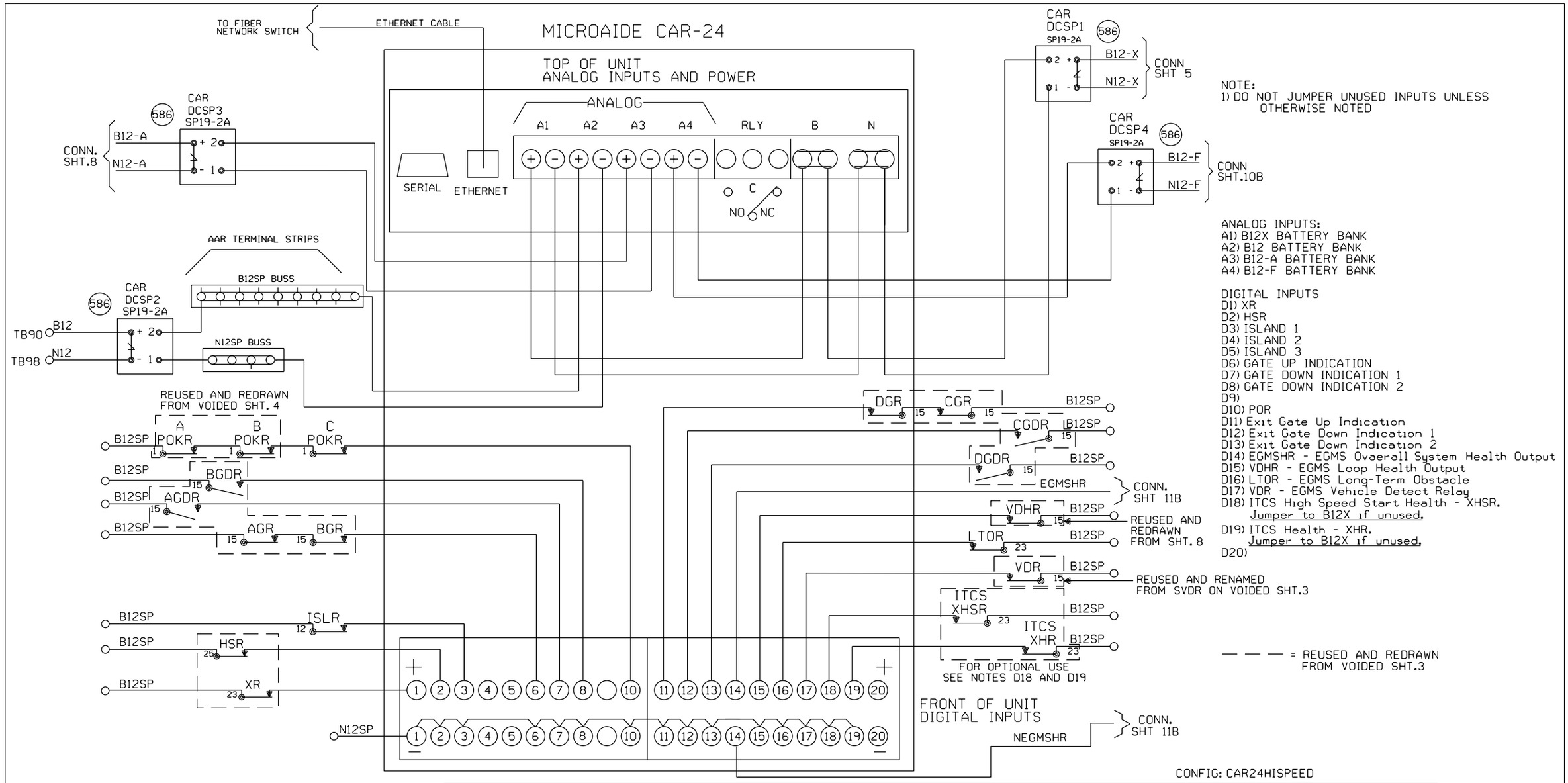

NOTE:
1) DO NOT JUMPER UNUSED INPUTS UNLESS OTHERWISE NOTED

ANALOG INPUTS:
A1) B12X BATTERY BANK
A2) B12 BATTERY BANK
A3) B12-A BATTERY BANK
A4) B12-F BATTERY BANK

DIGITAL INPUTS
D1) XR
D2) HSR
D3) ISLAND 1
D4) ISLAND 2
D5) ISLAND 3
D6) GATE UP INDICATION
D7) GATE DOWN INDICATION 1
D8) GATE DOWN INDICATION 2
D9)
D10) POR
D11) Exit Gate Up Indication
D12) Exit Gate Down Indication 1
D13) Exit Gate Down Indication 2
D14) EGMSHR - EGMS Overall System Health Output
D15) VDHR - EGMS Loop Health Output
D16) LTOR - EGMS Long-Term Obstacle
D17) VDR - EGMS Vehicle Detect Relay
D18) ITCS High Speed Start Health - XHSR.
Jumper to B12X if unused.
D19) ITCS Health - XHR.
Jumper to B12X if unused.
D20)

CONFIG: CAR24HISPEED

SETUP FILE: C24HISPEED

Alarm Name	Alarm Code	Clearing Code	Alarm Conditions	Alarm Clearing Conditions	Cleared by Maintainer Mode?
AC Power Off 30 Minutes	IP	PR	POR input low for 30 minutes.	POR input high for 5 minutes.	No
AC Power Off 2 Hours	PK	PR	POR input low for 2 Hours.	POR input high for 5 minutes.	No
Battery Bank #1 Out of Range	B1	1B	Battery 1 below 11V or over 19V for 10 seconds.	Battery 1 between 11V and 19V for 5 minutes	No
Battery Bank #2 Out of Range	B2	2B	Battery 2 below 11V or over 19V for 10 seconds.	Battery 2 between 11V and 19V for 5 minutes	No
Battery Bank #3 Out of Range	B3	3B	Battery 3 below 11V or over 19V for 10 seconds.	Battery 3 between 11V and 19V for 5 minutes	No
Battery Bank #4 Out of Range	B4	4B	Battery 4 below 11V or over 19V for 10 seconds.	Battery 4 between 11V and 19V for 5 minutes	No
Xing Activation over 10 Min - High Speed	LH	CL	XR or HSR input low for 10 minutes.	XR and HSR input high for 10 seconds.	Yes
Gate Not Up Properly	GU	GC	Gate Up indication is low and XR high for 3 minutes.	Gate Up indication high and XR high for 2 seconds.	Yes
Gate Not Down Properly	GD	GC	Gate Down indication(s) low and XR is low for 45 seconds.	Gate Down indication(s) is high and XR low for 2 seconds.	Yes
EGMS Vehicle Detector Health Alarm	EL	LE	VDHR input low for 10 seconds	VDHR input is high for 5 seconds	No
EGMS Long Term Obstruction Alarm	ET	TE	LTOR input low for 1 minute	LTOR input is high for 5 seconds	No
ITCS Health Alarm	IH	HI	ITCSXHR or ITCSXHSR low for 1 minute.	ITCSXHR and ITCSXHSR high for 5 seconds.	No

NEW SHEET

Designed: 10/11/12
TIER 3 PHASE 4
M.P.161.00 TO M.P.147.00
UPGRADE XINGS AND CP'S FOR HIGH SPEED RAIL
Rec#: WO#: 22821
IS: /MWK
/ /NST/MJF

MODIFICATION LEVEL	
O. A. LAST LEVEL CHECKED	DU
LAST LEVEL MOD THIS TYPICAL	DU
LAST LEVEL BY DESIGNER	DU
CHANGED FROM TYPICAL?	Y

REV 01.24.11 4K ACDCCAR24.3

CIRCUIT MODIFICATIONS ARE NOT TO BE MADE WITHOUT AUTHORITY FROM THE OFFICE OF SIGNAL DESIGN

Date: 10/11/12
Des: NST
Chk: MWK
AFE: 22821

UNION PACIFIC RAILROAD
LAWNDALE, ILLINOIS
MAIN STREET
SPRINGFIELD SUBDIVISION
Office of AVP Engineering - Signal Omaha, Nebraska

Sh.: 3
DOT 290977B
MP: 149.75
ID: CSL14975.3X

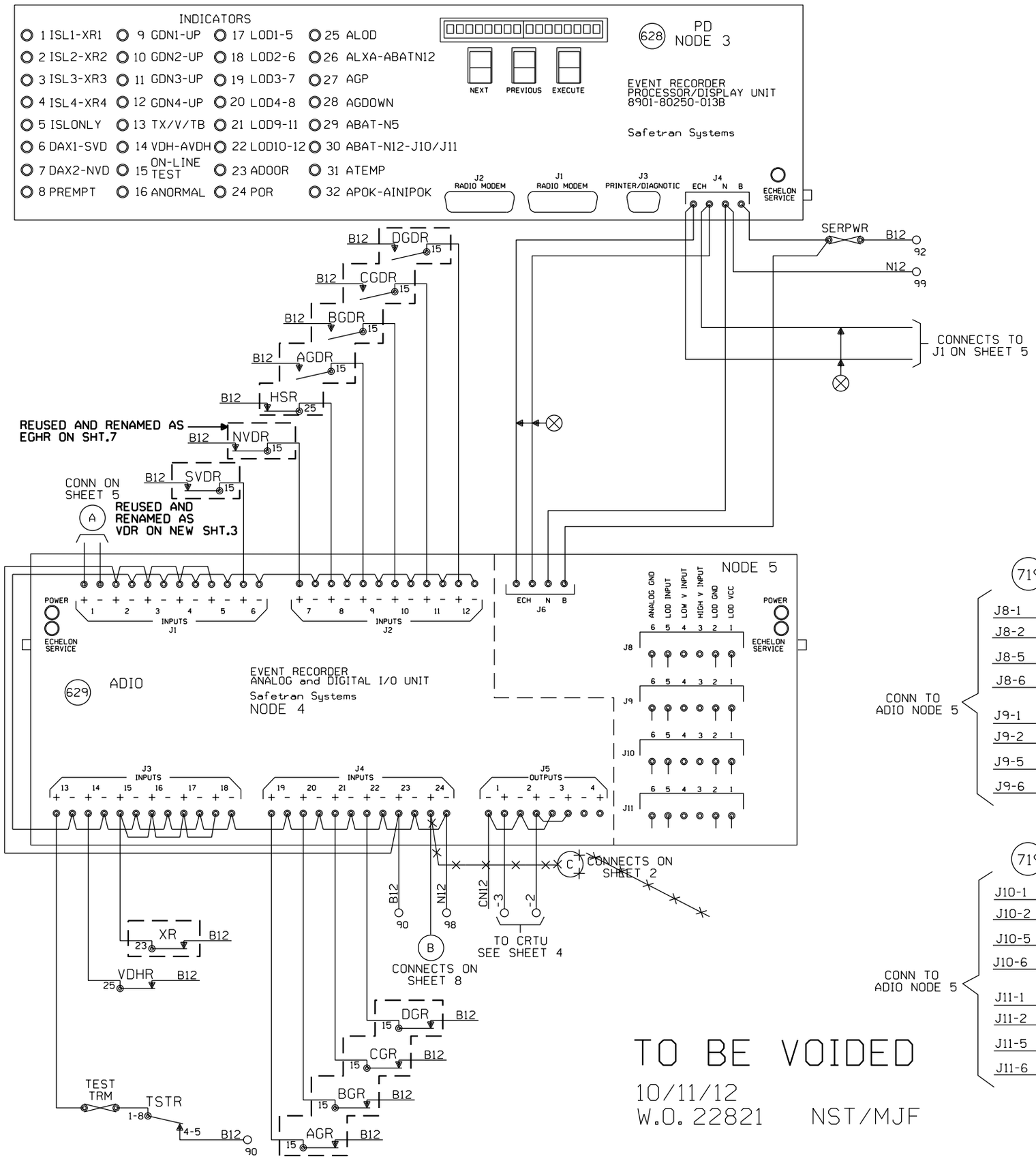

NODE #4
DIGITAL INPUTS:
1.ISL1
2.ISL2
3.ISL3
4.ISL4
5.ISONLY
6.DAX1-SVD
7.DAX2-NVD
8.PREMPT
9.GDWN1
10.GDWN2
11.GDWN3
12.GDWN4
13.TX/V/TB
14.VDH
15.XR1
16.XR2
17.XR3
18.XR4
19.GP1
20.GP2
21.GP3
22.GP4
23.POK/DO
24.POR

NODE #4
DIGITAL OUTPUTS:
J5-1 ALRM1
J5-2 ALRM2
J5-3 HEALTH
J5-4 DOORBUZ

NODE #5
ANALOG INPUTS:
J8-LOD1
J9-LOD2
J10-LOD3
J11-LOD4
NB-BATT5

GCP NODES:
6 GCP "A" NORMAL
7 GCP "B" NORMAL
16 GCP "A" STANDBY
17 GCP "B" STANDBY

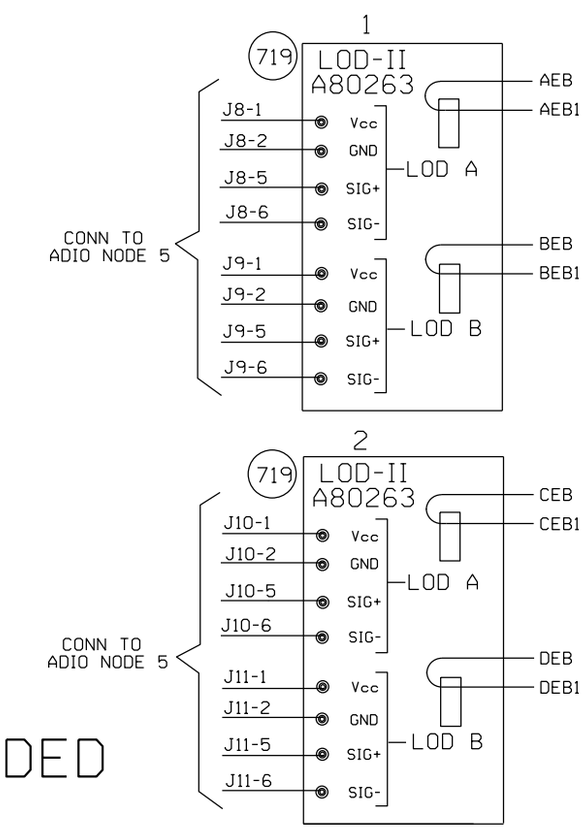

SER NOTES:
1. JUMPER ALL UNUSED DIGITAL "+" INPUTS TO THE B TERMINAL
2. JUMPER ALL UNUSED DIGITAL "-" INPUTS TO THE N TERMINAL.
3. DO NOT JUMPER INPUTS WITH DIFFERENT VOLTAGE REFERENCES TOGETHER.
4. WHEN L.E.D. #15 IS LIT THE SER IS IN TEST MODE.

⊗ = TWISTED WIRES.

— — — = REUSED AND REDRAWN ON NEW SHT.3

——— = IN

—×—×—×— = OUT

TO BE VOIDED

10/11/12
W.O. 22821 NST/MJF

LAWNDALE, ILLINOIS
MAIN STREET
M.P. 149.75
SPRINGFIELD SUBDIVISION
D.O.T.#290 977B

02-24-09 INSTALL MONITOR RACK FOR XINGS W.O. 87933 MAS	REV. 2-20-08 UPGRADED CROSSING PROTECTION FOR THE HIGH SPEED RAIL PROJ. FROM MAZONIA TO SPRINGFIELD. AFE #00183 REC. #15252 I.S. 3-11-06 JJF JM/WITT/WITT/JNM	MODIFICATION LEVEL	
		Q.A. LAST LEVEL CHK'D.	DA
		LAST LEVEL MOD. THIS TYP.	CZ
		LAST LEVEL BY DESIGNER.	DD
		CHANGED FROM TYP.? Y/N	Y

CIRCUIT MODIFICATIONS ARE NOT TO BE MADE WITHOUT AUTHORITY FROM THE OFFICE OF SIGNAL DESIGN

DES: WITT.IND.
DIG: WITT.IND.
CHK: J.J.F.
A.F.E. 00183
ID= CSL14975.3X

UNION PACIFIC RAILROAD
BLOOMINGTON, ILLINOIS TO
VALLEY JCT., ILLINOIS
C.T.C. CIRCUITS
Office of AVP Engineering-Signal OMAHA NEBR.

DATE 4-1-02
SHEET 3
DWG 149.75
RTE-CSL

(REV. 4-4-00) (SER.TYP)

LEFT

775

VOLTAGE MONITOR 520603-2V150A

RAILWAY EQUIPMENT CO.
MPLS, MN 763-972-2200

PASSWORD			The Password to adjust parameters is 5.
MAX VCH1	SET	---- . ---	High voltage setpoint for channel one.
LOW VCH1	SET	---- . ---	Low voltage setpoint for channel one.
DELAY CH1	SET	---------	Delay time in sec. before a fault is set for ch. one.
MAX VCH2	SET	---- . ---	High voltage setpoint for channel two.
LOW VCH2	SET	---- . ---	Low voltage setpoint for channel Two.
HIGH AMP	SET	---------	High current setpoint for channel two.
LOW AMP	SET	---------	Low current setpoint for channel two.
HIGH TEMP	SET	---------	High temp. setpoint for channel two.
LOW TEMP	SET	---------	Low temp. setpoint for channel two.
DELAY CH2	SET	---------	Delay time in sec. before a fault is set for ch. two.

MENU OPERATION: Depressing the MODE button will move through all screens. Depressing the INCREASE or DECREASE button will increase or decrease the desired value

LOW VOLTAGE SETPOINT IS TO BE SET AT 11 VOLTS.

TOP

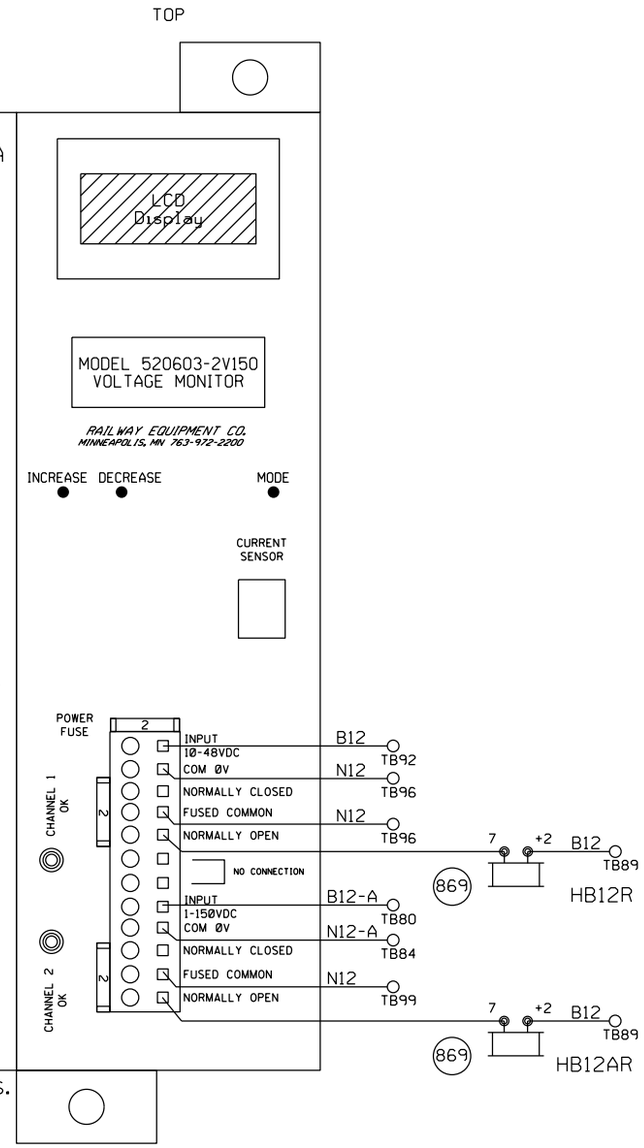

NEW SHEET

					Designed: 10/11/12 TIER 3 PHASE 4 M.P.161.00 TO M.P.147.00 UPGRADE XINGS AND CP'S FOR HIGH SPEED RAIL Rec#: WO#: 22821 IS: /MWK / /NST/MJF	MODIFICATION LEVEL		CIRCUIT MODIFICATIONS ARE NOT TO BE MADE WITHOUT AUTHORITY FROM THE OFFICE OF SIGNAL DESIGN	Date: 10/11/12	UNION PACIFIC RAILROAD	Sh.: 4
						O. A. LAST LEVEL CHECKED	DU		Des: NST	LAWNDALE, ILLINOIS MAIN STREET SPRINGFIELD SUBDIVISION	DOT 290977B
						LAST LEVEL MOD THIS TYPICAL	DU		Chk: MWK		MP: 149.75
						LAST LEVEL BY DESIGNER	DU		AFE: 22821		ID: CSL14975.4X
						CHANGED FROM TYPICAL?	Y				
						REV 01.24.11 4K 2TKEGMS.5				Office of AVP Engineering - Signal Omaha, Nebraska	

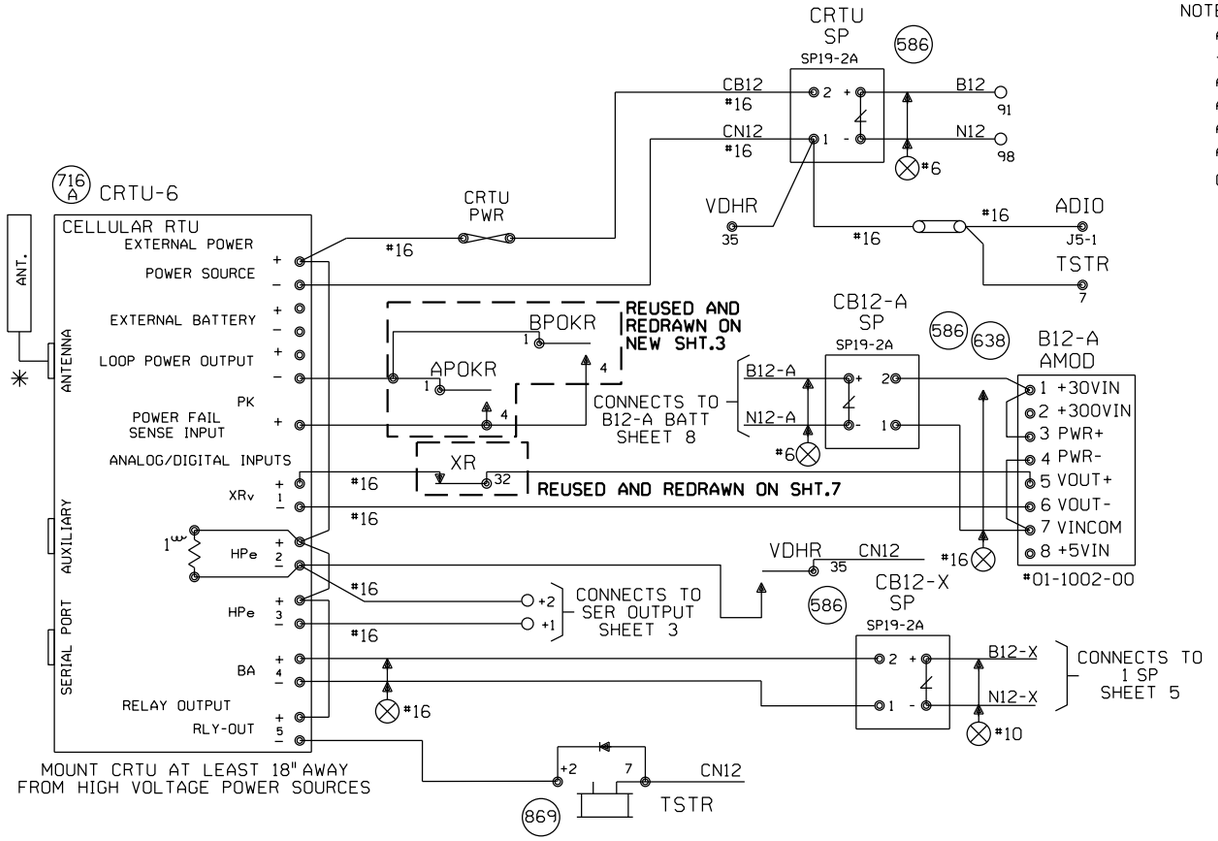

NOTES:

ALL DIODES 1N5060 OR 1N4004 UNLESS OTHERWISE NOTED.
✳ MOUNT ANTENNA ON TOP OF HOUSE.
ALL WIRES #18 UNLESS OTHERWISE NOTED.
ALL UNUSED 'NC' INPUTS MUST BE TIED HIGH TO BATTERY
ALL UNUSED ANALOG INPUTS MUST BE TIED HIGH TO BATTERY
ALL UNUSED 'NO' INPUTS MUST BE DISCONNECTED

CRTU FRONT PANEL DISPLAY CHART INDICATES NORMAL STATE

■ DIGITAL INPUT HIGH, OR POWER FAIL INPUT CLOSED

□ DIGITAL INPUT LOW, OR POWER FAIL INPUT OPEN

NORMAL STATE FOR ANALOG CHANNELS IS EQUAL TO THE STORED NOMINAL VOLTAGE +120% OR -81%

□ L ← LATCH IS SET BECAUSE CRTU DETECTED AN ALARM CONDITION

■ 12.06V L ←

'sRUN MODE' 'sRUN MODE-SILENT'

CRTU RADIO IS DISABLED. REPROGRAM CRTU WITH LAPTOP.

MEASURE NOMINAL VOLTAGE ON ANALOG INPUT MODULE BETWEEN 1 +30VIN AND 7 VINCOM

ANALOG AND AC INPUT MODULES MUST BE MOUNTED LESS THAN 12" FROM THE CRTU

ANALOG MODULES CONVERT DC VOLTAGE TO A SQUARE WAVE. A WORKING ANALOG MODULE WILL HAVE 4.5VDC TO 8.0VDC BETWEEN 5VOUT+ AND 6VOUT-. WHERE, 0VOLTS = 0HZ OUT, 30VOLTS = 10KHZ OUT, AND 15VOLTS = 5KHZ OUT
MAKE SURE CRTU IS PROGRAMMED WITH CALIBRATION SETTINGS.

TO BE VOIDED

10/11/12
W.O. 22821 NST/MJF

UNIT INSTALLATION AND SETUP

R.R. SITE ID WHERE; SSSS = 4 CHARACTER SUBDIVISION ID. FILL WITH PRECEDING ZEROS AS REQUIRED. THE MAIN TRACK SUBDIVISION ID# IS IN THE CURRENT TIMETABLE. INDUSTRIAL LEADS, LEASED, AND LEAD TRACKS LISTED WITHIN THE SUBDIVISION MAY HAVE THEIR OWN UNIQUE SUBDIVISION ID#. ALWAYS REFER TO CURRENT PRINTED COPY OF THE TIMETABLE.
LLLLLLLL = 8 CHARACTERS USE DOT# AT CROSSINGS, AND
WDLLLLLL = USE 'WD' THEN MP# AT WAYSIDE LOCATIONS.
EXAMPLE = 0785WD1801.5UT
HBLLLLLL = USE 'HB' THEN MP# AT HBD SITES.
EXAMPLE = 0100-HB55.62TX
THE MP# MUST USE A DECIMAL POINT TO SEPARATE NUMBERS. FILL WITH PRECEDING DASHES AS REQUIRED.
AA = 2 CHARACTER STATE NAME FOR ALL LOCATIONS. MUST BE 14 CHARACTERS LONG, NO SPACES ALLOWED.

SITE IDENTIFIER: SSSSLLLLLLLLAA	0029-290977BIL
OPERATION TO RESUME: RUN	
SIGNAL STRENGTH dBm	
CARRIER ID	
FIRMWARE VERSION	2.3.
BOOT VERSION:	
CMM VERSION:	
SERIAL NUMBER	
MIN ASSIGNMENT	
ESN: (MICROBURST ONLY)	
CONFIGURATION NET	CELLEMETRY
SILENCE INTERVAL	60 MINUTES
HEALTHCHECK INTERVAL	EVERY 2 DAYS
ALARM DEFER DELAY	240 MINUTES (4 HOURS)
SIGNAL STATUS	
SCADANET STATUS	
CALIBRATION CONSTANT CH1	
CALIBRATION CONSTANT CH2	
CALIBRATION CONSTANT CH3	
CALIBRATION CONSTANT CH4	
CALIBRATION CONSTANT PS	

FIELD PROVIDES: SAMPLED NOMINAL VOLTAGES, SCADANET STATUS CALIBRATION CONSTANTS, SERIAL NUMBER, AND SIGNAL STATUS.

CHANNEL SETUP - STANDARD CONFIGURATION 3:XRv,HPe,HPe,Ba

CHANNEL NORMAL STATE	SENSE (NO/NC)	NAME FUNCTION	RECOGNITION DELAY SECONDS ACTIVE	RECOGNITION DELAY SECONDS NORMAL	RETURN TO NORMAL	REPORTING MODE	ALARM LINKED CHANNEL	ALARM LINKED CRITERIA	EVENT LOGGING ENABLED OPTIONS
POWER FAIL (CH5) ■	POWER FAIL DETECT NO	PF1n-PK AC POWER FAIL	7,200 ALARM	300 NORMAL	ENABLED	ALERT	DISABLED	N/A	
CH1 STORED NOMINAL VOLTAGE	ANALOG INPUT N/A	CH1-XR/V XR DOWN TO LONG BATTERY LOW	1800 ALARM	1200 NORMAL	ENABLED	ALERT W/UPDATE	DISABLED	N/A	ANALOG VALUE SENT
CH2 □	DIGITAL INPUT NO	CH2-HPe LIGHT OUT GATE NOT UP/DOWN	120 ALARM	10 NORMAL	ENABLED	ALERT	DISABLED	N/A	
CH3 □	DIGITAL INPUT NO	CH3-HPe VEHICLE DETECTOR HEALTH FAILURE	120 ALARM	10 NORMAL	ENABLED	ALERT	DISABLED	N/A	DIGITAL EVENTS
CH4 STORED NOMINAL VOLTAGE	ANALOG INPUT N/A	CH4-Ba/V BATTERY MONITOR BATTERY LOW	600 ALARM	1200 NORMAL	ENABLED	ALERT W/UPDATE	DISABLED	N/A	PF1n-PK CH2-HPe CH3-HPe
POWER SOURCE (CH6)	ANALOG INPUT N/A	PS-Ba/V BATTERY MONITOR BATTERY LOW	600 ALARM	1200 NORMAL	ENABLED	ALERT W/UPDATE	DISABLED	N/A	

ANALOG CHANNEL	USEFUL RANGE VOLTS LOW	USEFUL RANGE VOLTS HIGH	DISPLAYED RANGE VOLTS LOW	DISPLAYED RANGE VOLTS HIGH	RELATIVE ALARM POINT LOW	RELATIVE ALARM POINT HIGH	ABSOLUTE ALARM POINT LOW	ABSOLUTE ALARM POINT HIGH	AUTOMATIC UPDATE INTERVAL	STORED NOMINAL VOLTAGE	SAMPLED NOMINAL VOLTAGE
CH1	0.0	30.00	0.0	30.00	81%	120%	10.0	29.0	14 DAYS	12.69	
CH2											
CH3											
CH4	0.0	30.00	0.0	30.00	81%	120%	10.0	29.0	14 DAYS	12.69	
POWER SOURCE	0.0	30.00	0.0	30.00	81%	120%	10.0	29.0	14 DAYS	12.69	
RELAY OUTPUT	NAME RLY-OUT		ACTIVE SET-UP-OPEN		NORMAL CLR-DN-CLOSE		PULSE DURATION		15 SECONDS	StdCfg Ver: 2.3.3 REV'D 9-20-02	

MAINTENANCE OPERATIONS

TO START OR ABORT ANY PROCEDURE

1. PRESS THE 'CANCEL' BUTTON FIRST

WHEN RESPONDING TO A CALL, PUT THE CRTU IN THE 'SILENCE ALARMS' MODE

1. PRESS 'SELECT' AND THEN '+ ARROW' BUTTON UNTIL
   DISPLAY: ACTION?
   SILENCE ALARMS
2. PRESS THE 'SELECT' BUTTON TWICE
3. CORRECT PROBLEM AND SIMULATE NORMAL TRAIN MOVEMENT THROUGH THE LOCATION
4. EXAMINE EACH CHANNEL ON THE CRTU
5. PRESS THE '+/- ARROW' BUTTON
   VERIFY ALL CHANNELS INDICATE A NORMAL STATE
NORMAL STATES ARE ON THE CHANNEL SETUP CHART

CLEAR TIMERS, LATCHES AND SEND ALL NORMAL

1. DO STEPS #1 - #5 ABOVE, AND PRESS 'CANCEL'.
2. PRESS 'SELECT' AND THEN '- ARROW' BUTTON UNTIL
   DISPLAY: ACTION?
   SERVICE MODE
3. PRESS 'SELECT' AGAIN TO RESET TIMERS, AND IF
   DISPLAY: SERVICE MODE
   ALL NORMAL
4. PRESS 'SELECT' AGAIN TO CLEAR LATCHES, AND SEND ALL NORMAL. SKIP STEPS #5-#6.
5. HOWEVER, IF ALARMS ARE NOT CLEARED;
   DISPLAY: SERVICE MODE
   ALARMS PENDING/PRESENT
6. PRESS 'CANCEL', CORRECT PROBLEM AND REPEAT STEPS #2 THRU #5 UNTIL ALL NORMAL SENT.

TO CANCEL THE 'SILENCE ALARMS' MODE

1. PRESS 'SELECT' AND THEN '+ ARROW' BUTTON UNTIL
   DISPLAY: ACTION?
   CANCEL SILENCE
2. PRESS THE 'SELECT' BUTTON AGAIN

EXAMINE & SET BATTERY VOLTAGE NOMINAL VALUE

1. PRESS THE '+ ARROW' OR '- ARROW' BUTTON UNTIL THE DESIRED CHANNEL IS DISPLAYED.
   DISPLAY: PS-BA:
   13.83V NORMAL
2. VERIFY THE DISPLAYED READING WITH A DIGITAL VOLTMETER
3. PRESS THE 'SELECT' BUTTON, AND THE CRTU DISPLAY WILL SWITCH BETWEEN CURRENT/SAVED NOMINAL VOLTAGE VALUES.
   DISPLAY: NOMINAL ON #6? (CURRENT)
   13.83
   DISPLAY: SAVED NOMINAL 6 (STORED)
   12.69
4. PRESS THE 'SELECT' BUTTON AND THE CURRENT OR 'NOMINAL ON' VALUE WILL BE SAMPLED AND STORED AS THE 'SAVED NOMINAL' VALUE
5. VERIFY THE 'NOMINAL ON' AND 'SAVED NOMINAL' VALUES ARE EQUIVALENT, REPEAT STEPS #1 THRU #3 & PRESS THE 'CANCEL' BUTTON.

LAWNDALE, ILLINOIS
MAIN STREET
M.P. 149.75
SPRINGFIELD SUBDIVISION
D.O.T.#290 977B

REV. 2-20-08
UPGRADED CROSSING PROTECTION FOR THE HIGH SPEED RAIL PROJ. FROM MAZONIA TO SPRINGFIELD.
AFE #00183
REC. #15252
I.S. 3-11-06 JJF
CM/WITT/WITT/JNM

MODIFICATION LEVEL	
Q.A. LAST LEVEL CHK'D.	DA
LAST LEVEL MOD. THIS TYP.	CZ
LAST LEVEL BY DESIGNER.	DD
CHANGED FROM TYP.? Y/N	Y

CIRCUIT MODIFICATIONS ARE NOT TO BE MADE WITHOUT AUTHORITY FROM THE OFFICE OF SIGNAL DESIGN

DES: WITT.IND.
DIG: WITT.IND.
CHK: J.J.F.
A.F.E. 00183
ID= CSL14975.4X

UNION PACIFIC RAILROAD
BLOOMINGTON, ILLINOIS TO VALLEY JCT., ILLINOIS
C.T.C. CIRCUITS
Office of AVP Engineering-Signal OMAHA NEBR.

DATE 4-1-02
SHEET 4
DWG 149.75
RTE-CSL

(REV. 7-9-00) (CRTU4G.3)

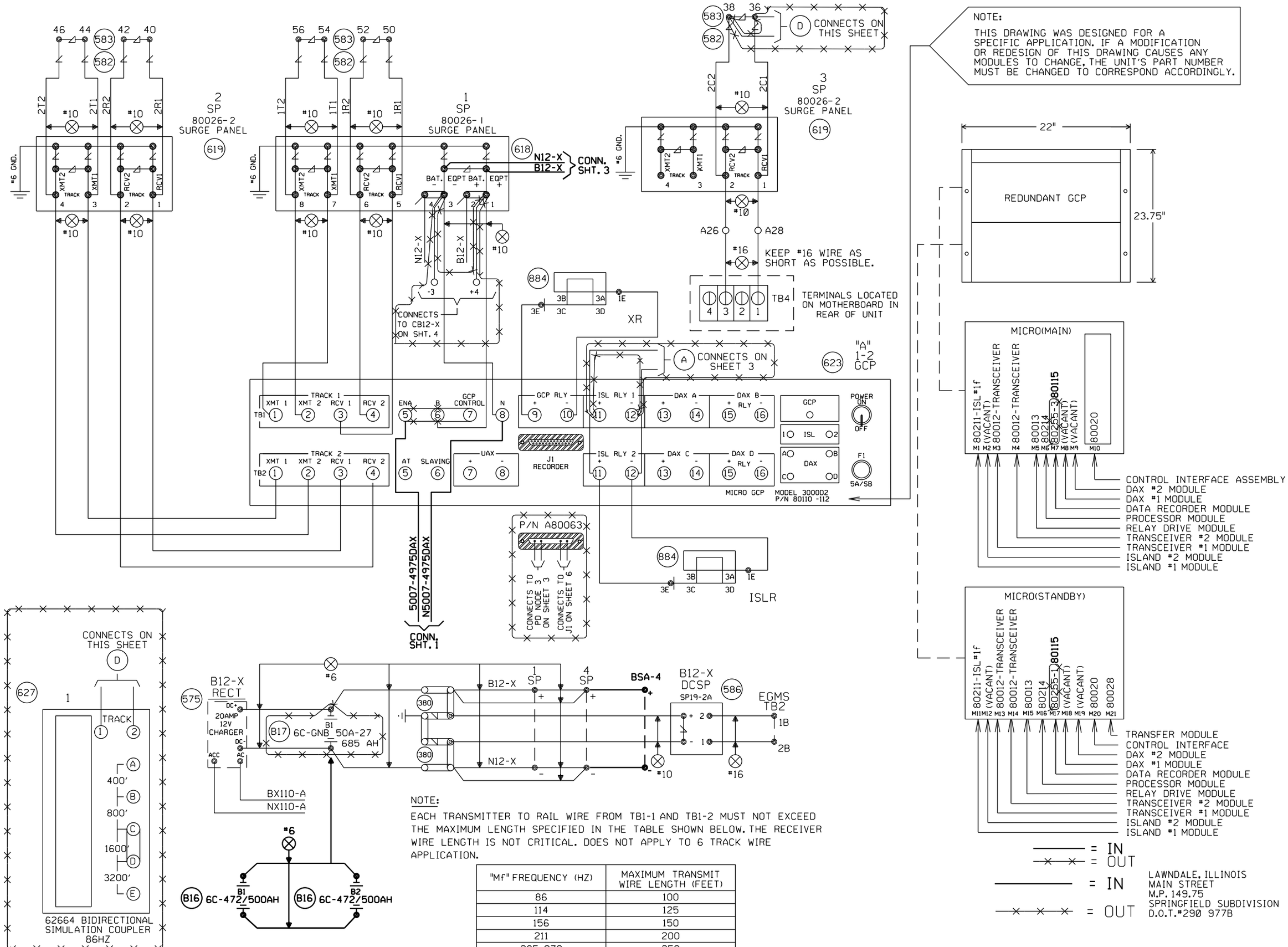

NOTE:

EACH TRANSMITTER TO RAIL WIRE FROM TB1-1 AND TB1-2 MUST NOT EXCEED THE MAXIMUM LENGTH SPECIFIED IN THE TABLE SHOWN BELOW. THE RECEIVER WIRE LENGTH IS NOT CRITICAL. DOES NOT APPLY TO 6 TRACK WIRE APPLICATION.

"Mf" FREQUENCY (HZ)	MAXIMUM TRANSMIT WIRE LENGTH (FEET)
86	100
114	125
156	150
211	200
285-970	250

Designed: 10/11/12
TIER 3 PHASE 4
M.P.161.00 TO M.P.147.00
UPGRADE XINGS AND CP'S FOR HIGH SPEED RAIL
Rec": WO": 22821 MWK
IS: / /NST/MJF

02-24-09
INSTALL MONITOR RACK FOR XINGS
W.O. 87933 MAS

REV. 2-20-08
UPGRADED CROSSING PROTECTION FOR THE HIGH SPEED RAIL PROJ. FROM MAZONIA TO SPRINGFIELD.
AFE #00183
REC. #15252
I.S. 3-11-06 JJF
CM/WITT/WITT/JNM

MODIFICATION LEVEL	
Q.A. LAST LEVEL CHK'D.	DA
LAST LEVEL MOD. THIS TYP.	CZ
LAST LEVEL BY DESIGNER.	DD
CHANGED FROM TYP.? Y/N	Y

CIRCUIT MODIFICATIONS ARE NOT TO BE MADE WITHOUT AUTHORITY FROM THE OFFICE OF SIGNAL DESIGN

DES: WITT.IND.
DIG: WITT.IND.
CHK: J.J.F.
A.F.E. 00183
ID= CSL14975.5X

UNION PACIFIC RAILROAD
BLOOMINGTON, ILLINOIS TO VALLEY JCT., ILLINOIS
C.T.C. CIRCUITS
Office of AVP Engineering-Signal OMAHA NEBR.

DATE 4-1-02
SHEET 5
DWG 149.75
RTE-CSL

(REV. 7-9-00) (3K2TKUG.4)

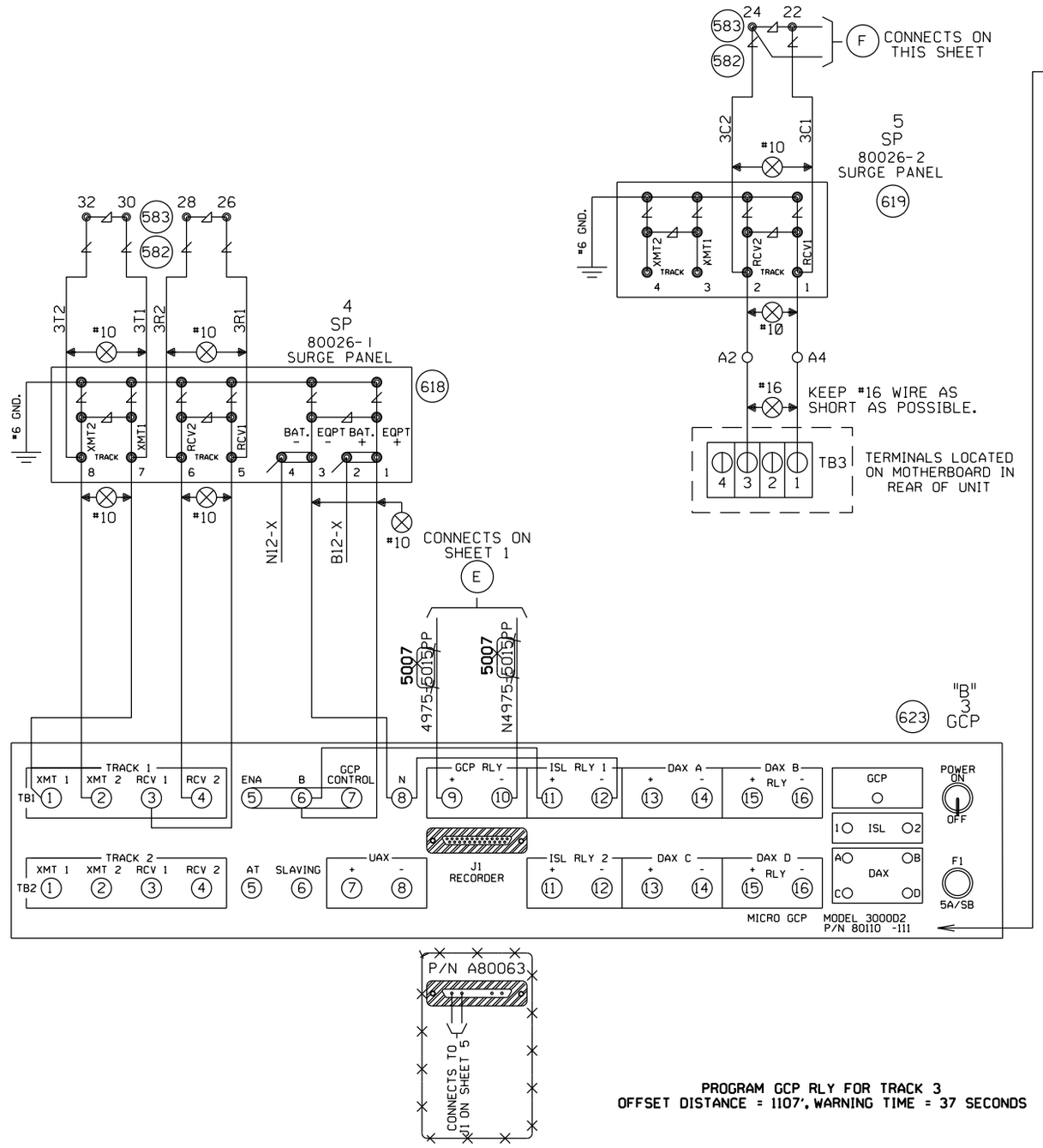

NOTE:

THIS DRAWING WAS DESIGNED FOR A SPECIFIC APPLICATION. IF A MODIFICATION OR REDESIGN OF THIS DRAWING CAUSES ANY MODULES TO CHANGE, THE UNIT'S PART NUMBER MUST BE CHANGED TO CORRESPOND ACCORDINGLY.

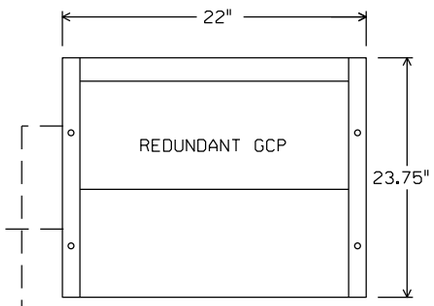

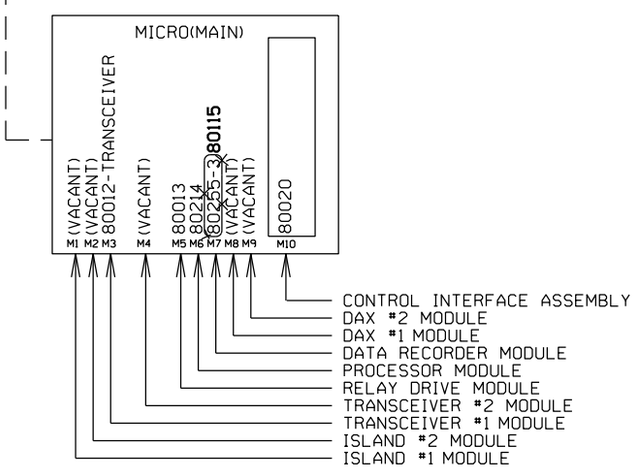

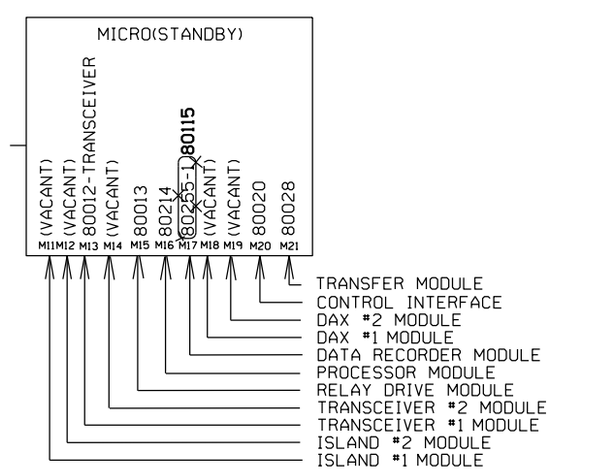

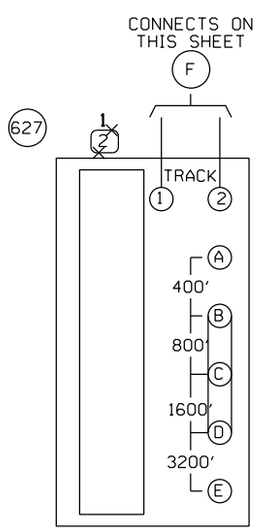

62664 BIDIRECTIONAL SIMULATION COUPLER 156HZ

PROGRAM GCP RLY FOR TRACK 3
OFFSET DISTANCE = 1107', WARNING TIME = 37 SECONDS

NOTE:

EACH TRANSMITTER TO RAIL WIRE FROM TB1-1 AND TB1-2 MUST NOT EXCEED THE MAXIMUM LENGTH SPECIFIED IN THE TABLE SHOWN BELOW. THE RECEIVER WIRE LENGTH IS NOT CRITICAL. DOES NOT APPLY TO 6 TRACK WIRE APPLICATION.

"Mf" FREQUENCY (HZ)	MAXIMUM TRANSMIT WIRE LENGTH (FEET)
86	100
114	125
156	150
211	200
285-970	250

——— = IN
—×—×— = OUT

LAWNDALE, ILLINOIS
MAIN STREET
M.P. 149.75
SPRINGFIELD SUBDIVISION
D.O.T.#290 977B

Designed: 10/11/12
TIER 3 PHASE 4
M.P.161.00 TO M.P.147.00
UPGRADE XINGS AND CP'S FOR HIGH SPEED RAIL
Rec': WO': 22821
IS: /MWK
/ /NST/MJF

REV. 2-20-08
UPGRADED CROSSING PROTECTION FOR THE HIGH SPEED RAIL PROJ. FROM MAZONIA TO SPRINGFIELD.
AFE #00183
REC. #15252
I.S. 3-11-06 JJF
CM/WITT/WITT/JNM

MODIFICATION LEVEL	
Q.A. LAST LEVEL CHK'D.	DA
LAST LEVEL MOD. THIS TYP.	CZ
LAST LEVEL BY DESIGNER.	DD
CHANGED FROM TYP.? Y/N	Y

CIRCUIT MODIFICATIONS ARE NOT TO BE MADE WITHOUT AUTHORITY FROM THE OFFICE OF SIGNAL DESIGN

DES: WITT.IND.
DIG: WITT.IND.
CHK: J.J.F.
A.F.E. 00183
ID= CSL14975.6X

UNION PACIFIC RAILROAD
BLOOMINGTON, ILLINOIS TO VALLEY JCT., ILLINOIS
C.T.C. CIRCUITS
Office of AVP Engineering-Signal OMAHA NEBR.

DATE 4-1-02
SHEET 6
DWG 149.75
RTE-CSL

(REV. 7-9-00) (3K2TKUG.4)

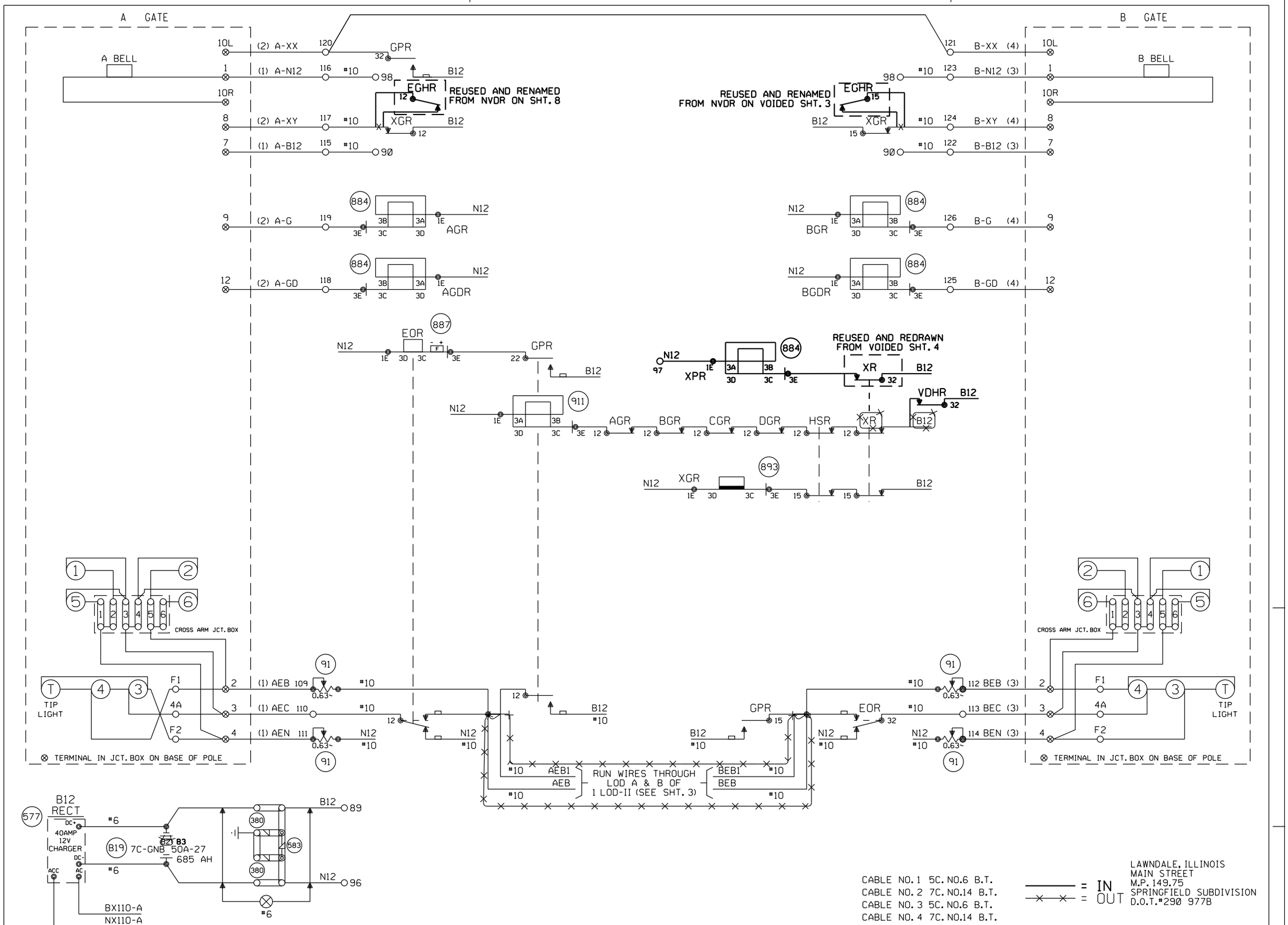

Designed: 10/11/12
TIER 3 PHASE 4
M.P.161.00 TO M.P.147.00
UPGRADE XINGS AND CP'S FOR HIGH SPEED RAIL
Rec#: WO#: 22821
IS: /MWK / /NST/MJF

REV. 2-20-08
UPGRADED CROSSING PROTECTION FOR THE HIGH SPEED RAIL PROJ. FROM MAZONIA TO SPRINGFIELD.
AFE #00183
REC. #15252
I.S. 3-11-06 JJF
CM/WITT/WITT/JNM

MODIFICATION LEVEL	
Q.A. LAST LEVEL CHK'D.	DA
LAST LEVEL MOD. THIS TYP.	CZ
LAST LEVEL BY DESIGNER.	DD
CHANGED FROM TYP.? Y/N	Y

CIRCUIT MODIFICATIONS ARE NOT TO BE MADE WITHOUT AUTHORITY FROM THE OFFICE OF SIGNAL DESIGN

DES: WITT.IND.
DIG: WITT.IND.
CHK: J.J.F.
A.F.E. 00183
ID= CSL14975.7X

UNION PACIFIC RAILROAD
BLOOMINGTON, ILLINOIS TO VALLEY JCT., ILLINOIS
C.T.C. CIRCUITS
Office of AVP Engineering-Signal OMAHA NEBR.

DATE 4-1-02
SHEET 7
DWG 149.75
RTE-CSL

(REV. 7-9-00) (4GTYP.5)

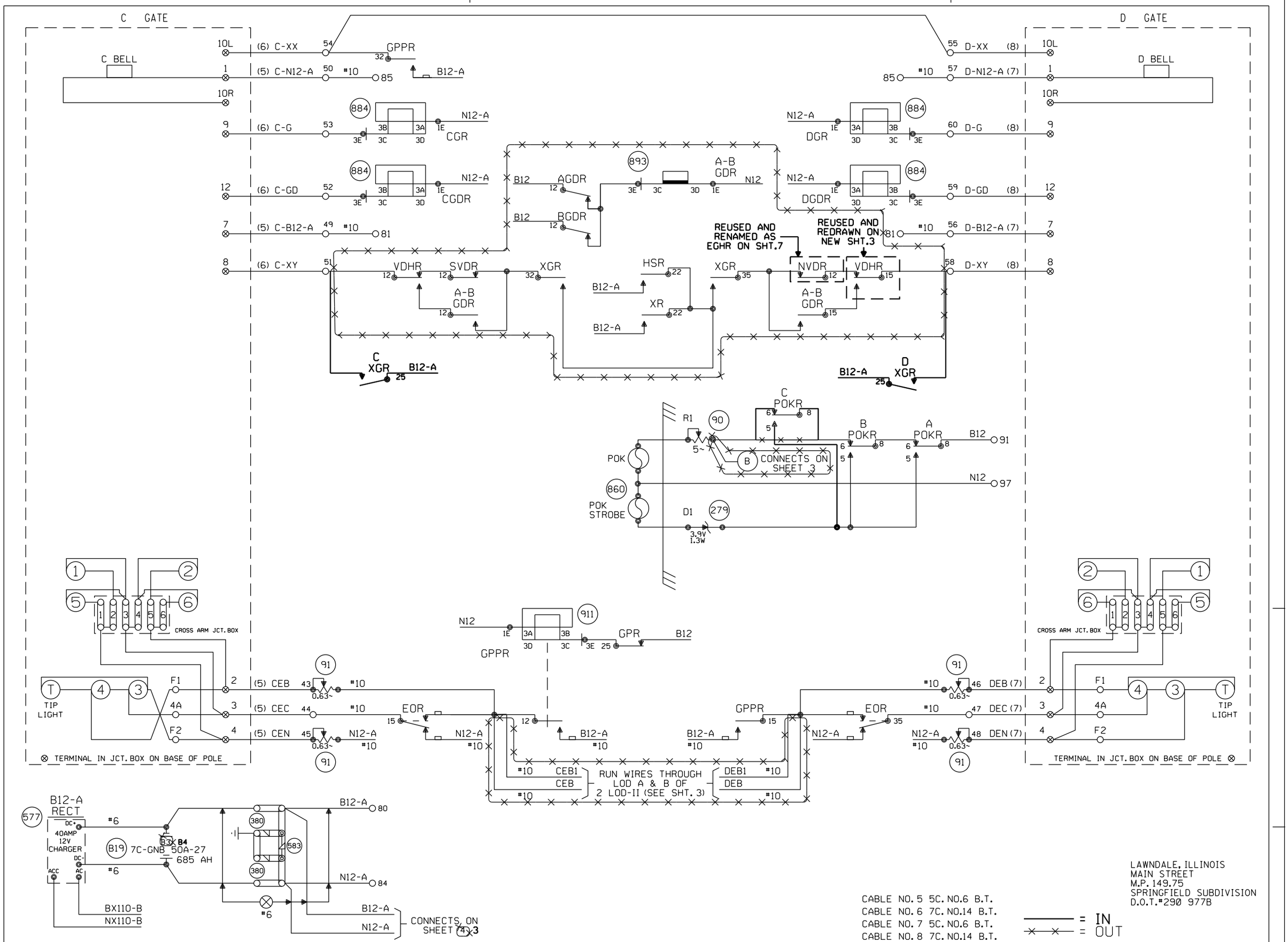

CABLE NO. 5 5C. NO.6 B.T.
CABLE NO. 6 7C. NO.14 B.T.
CABLE NO. 7 5C. NO.6 B.T.
CABLE NO. 8 7C. NO.14 B.T.

= IN
= OUT

LAWNDALE, ILLINOIS
MAIN STREET
M.P. 149.75
SPRINGFIELD SUBDIVISION
D.O.T.#290 977B

Designed: 10/11/12
TIER 3 PHASE 4
M.P.161.00 TO M.P.147.00
UPGRADE XINGS AND CP'S FOR HIGH SPEED RAIL
Rec#: WO#: 22821
IS: /MWK / /NST/MJF

REV. 2-20-08
UPGRADED CROSSING PROTECTION FOR THE HIGH SPEED RAIL PROJ. FROM MAZONIA TO SPRINGFIELD.
AFE #00183
REC. #15252
I.S. 3-11-06 JJF
CM/WITT/WITT/JNM

MODIFICATION LEVEL	
Q.A. LAST LEVEL CHK'D.	DA
LAST LEVEL MOD. THIS TYP.	CZ
LAST LEVEL BY DESIGNER.	DD
CHANGED FROM TYP.? Y/N	Y

CIRCUIT MODIFICATIONS ARE NOT TO BE MADE WITHOUT AUTHORITY FROM THE OFFICE OF SIGNAL DESIGN

DES: WITT.IND.
DIG: WITT.IND.
CHK: J.J.F.
A.F.E. 00183
ID= CSL14975.8X

UNION PACIFIC RAILROAD
BLOOMINGTON, ILLINOIS TO VALLEY JCT., ILLINOIS
C.T.C. CIRCUITS
Office of AVP Engineering-Signal OMAHA NEBR.

DATE 4-1-02
SHEET 8
DWG 149.75
RTE-CSL

(REV. 7-9-00) (4GTYP.6)

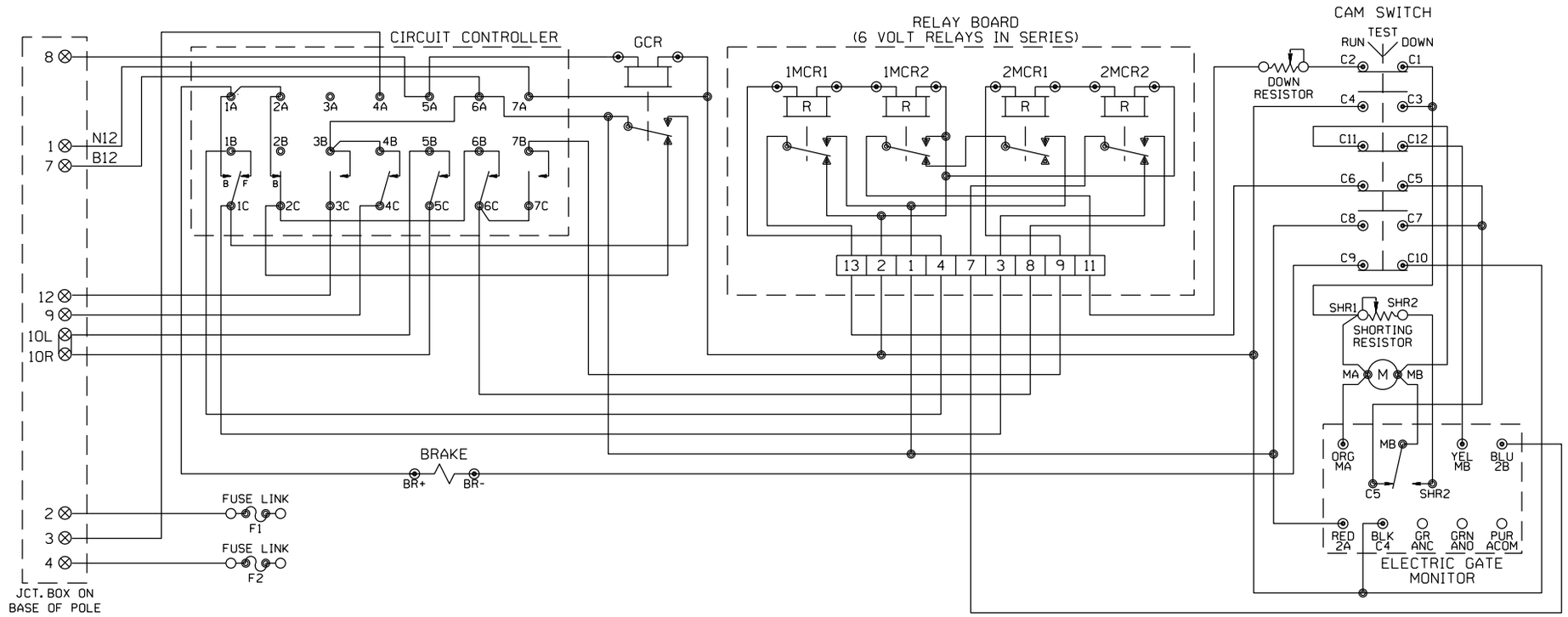

FOR WIRING GATES "C" AND "D"

WCH 3597 EXIT GATE

CONTACT	CLOSED	FUNCTION
1F	90-2	POWER DOWN
1B	2-0	ENGAGE BRAKE DOWN
2B	86-90	ENGAGE BRAKE UP
3	0-10	GATE DOWN
4	82-90	GATE CLEAR
5	10-90	BELL
6	60-90	POWER UP
7	0-75	DROP POWER UP

MECHANISM SHOWN IN CLEAR POSITION

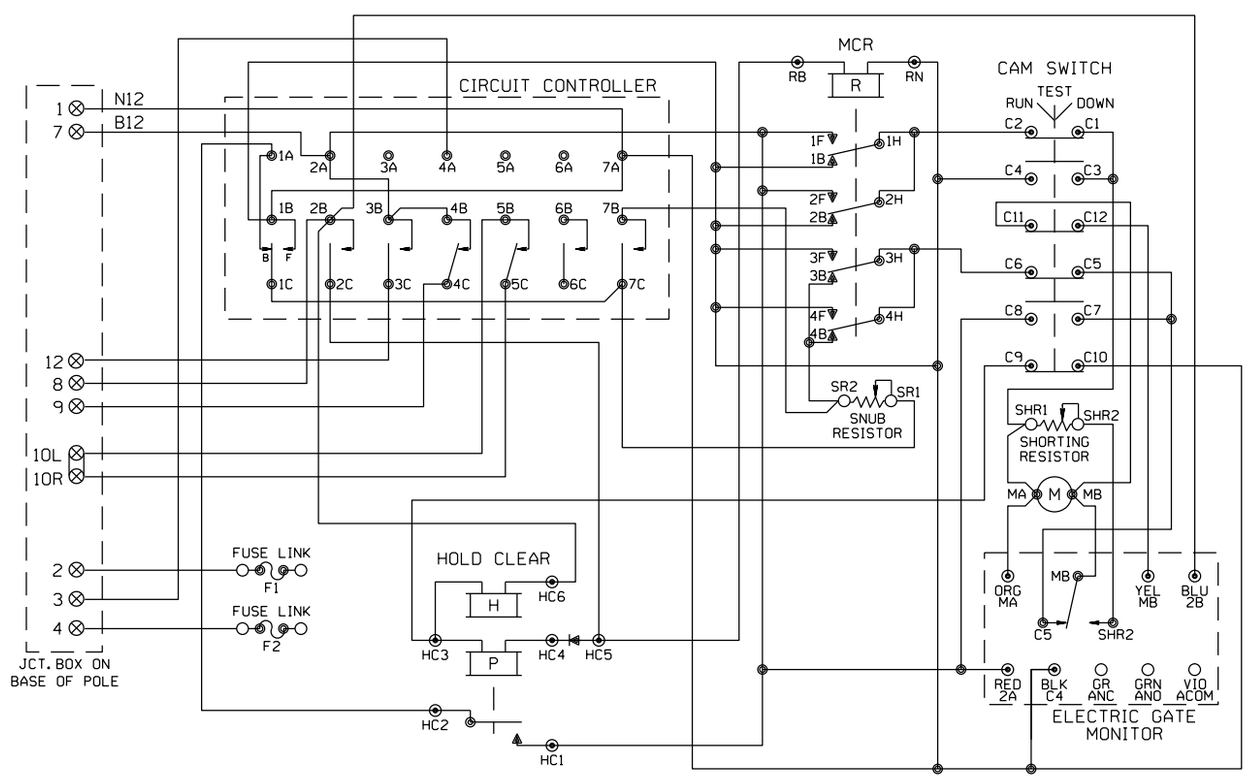

FOR WIRING GATES "A" AND "B"

WCH 3597 ENTRANCE GATE

CONTACT	CLOSED	FUNCTION
1B	75-90	POWER DOWN
1F	0-70	SNUB DOWN
2	0-86	POWER UP
3	0-10	GATE DOWN
4	82-90	GATE CLEAR
5	10-90	BELL
6	SPARE	SPARE
7	0-10	SNUB

MECHANISM SHOWN IN CLEAR POSITION

LAWNDALE, ILLINOIS
MAIN STREET
M.P. 149.75
SPRINGFIELD SUBDIVISION
D.O.T.#290 977B

REV. 2-20-08
UPGRADED CROSSING PROTECTION FOR THE HIGH SPEED RAIL PROJ. FROM MAZONIA TO SPRINGFIELD.
AFE #00183
REC. #15252
I.S. 3-11-06 JJF
CM/WITT/WITT/JNM

MODIFICATION LEVEL	
Q.A. LAST LEVEL CHK'D.	DA
LAST LEVEL MOD. THIS TYP.	CZ
LAST LEVEL BY DESIGNER.	DD
CHANGED FROM TYP.? Y/N	Y

CIRCUIT MODIFICATIONS ARE NOT TO BE MADE WITHOUT AUTHORITY FROM THE OFFICE OF SIGNAL DESIGN

DES: WITT.IND.
DIG: WITT.IND.
CHK: J.J.F.
A.F.E. 00183
ID= CSL14975.9X

UNION PACIFIC RAILROAD
BLOOMINGTON, ILLINOIS TO VALLEY JCT., ILLINOIS
C.T.C. CIRCUITS
Office of AVP Engineering-Signal OMAHA NEBR.

DATE 4-1-02
SHEET 9
DWG 149.75
RTE-CSL

(REV. 7-9-00)(GWIRING.DGN)

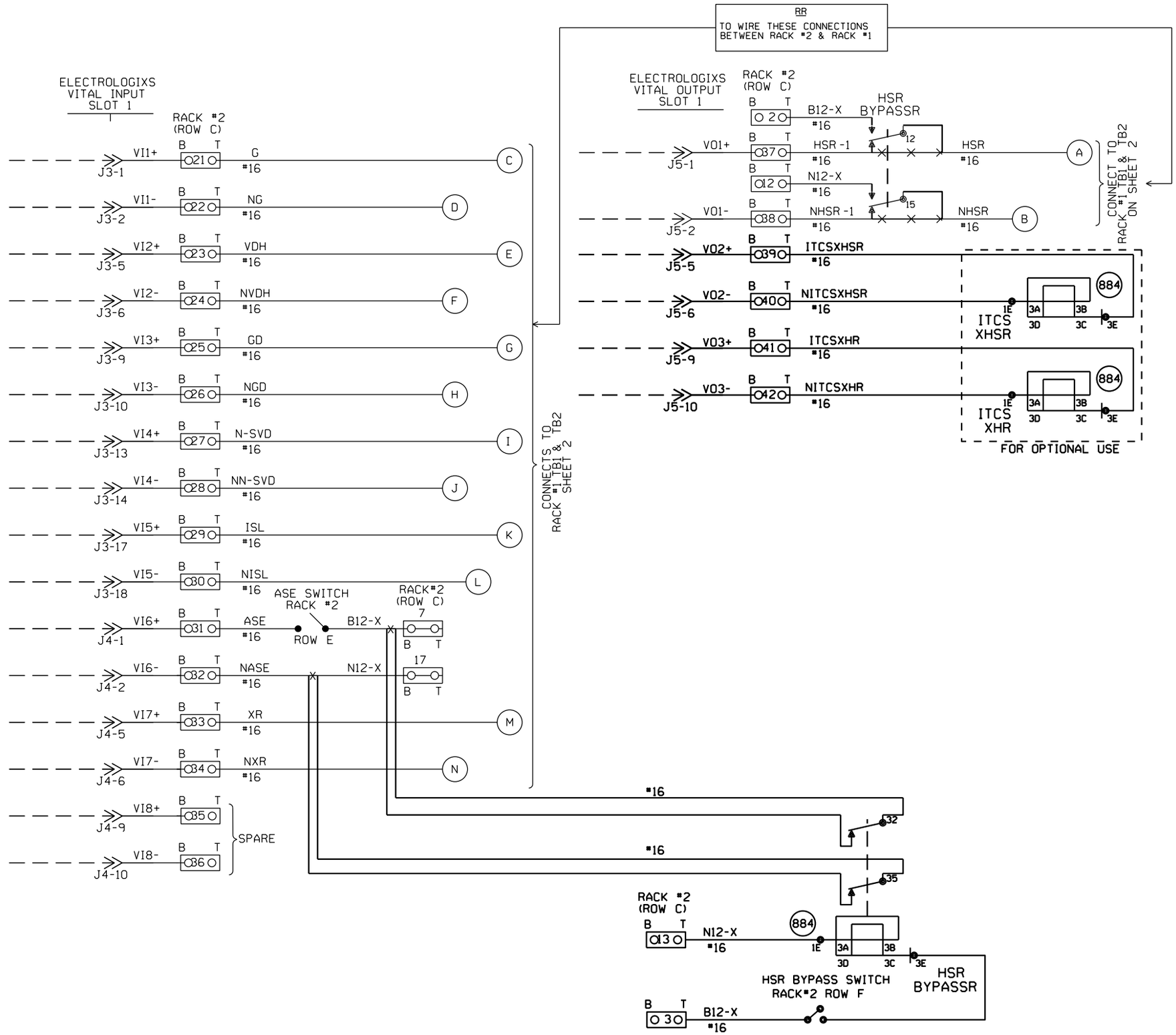

NOTES:

1. INPUT WIRES, OUTPUT WIRES, POWER WIRES, PUT IN SEPARATE BUNDLES.
2. ALL WIRES #16 UNLESS NOTED.
3. O?? O 2 POSITION WAGO BLOCK.

= IN
= OUT

NEW SHEET

						Designed: 10/11/12 TIER 3 PHASE 4 M.P.161.00 TO M.P.147.00 UPGRADE XINGS AND CP'S FOR HIGH SPEED RAIL Rec#: WO#: 22821 IS: /MWK / /NST/MJF	02-24-09 INSTALL MONITOR RACK FOR XINGS W.O. 87933 MAS	CIRCUIT MODIFICATIONS ARE NOT TO BE MADE WITHOUT AUTHORITY FROM THE OFFICE OF SIGNAL DESIGN	Date: 09-25-08 Des: CRK Chk: AFE: 87933	UNION PACIFIC RAILROAD LAWNDALE, ILLINOIS MAIN STREET SPRINGFIELD SUBDIVISION Office of AVP Engineering-Signal Omaha, Nebraska	Sh.: 10 DOT 290977B MP: 149.75 ID: CSL14975.10X

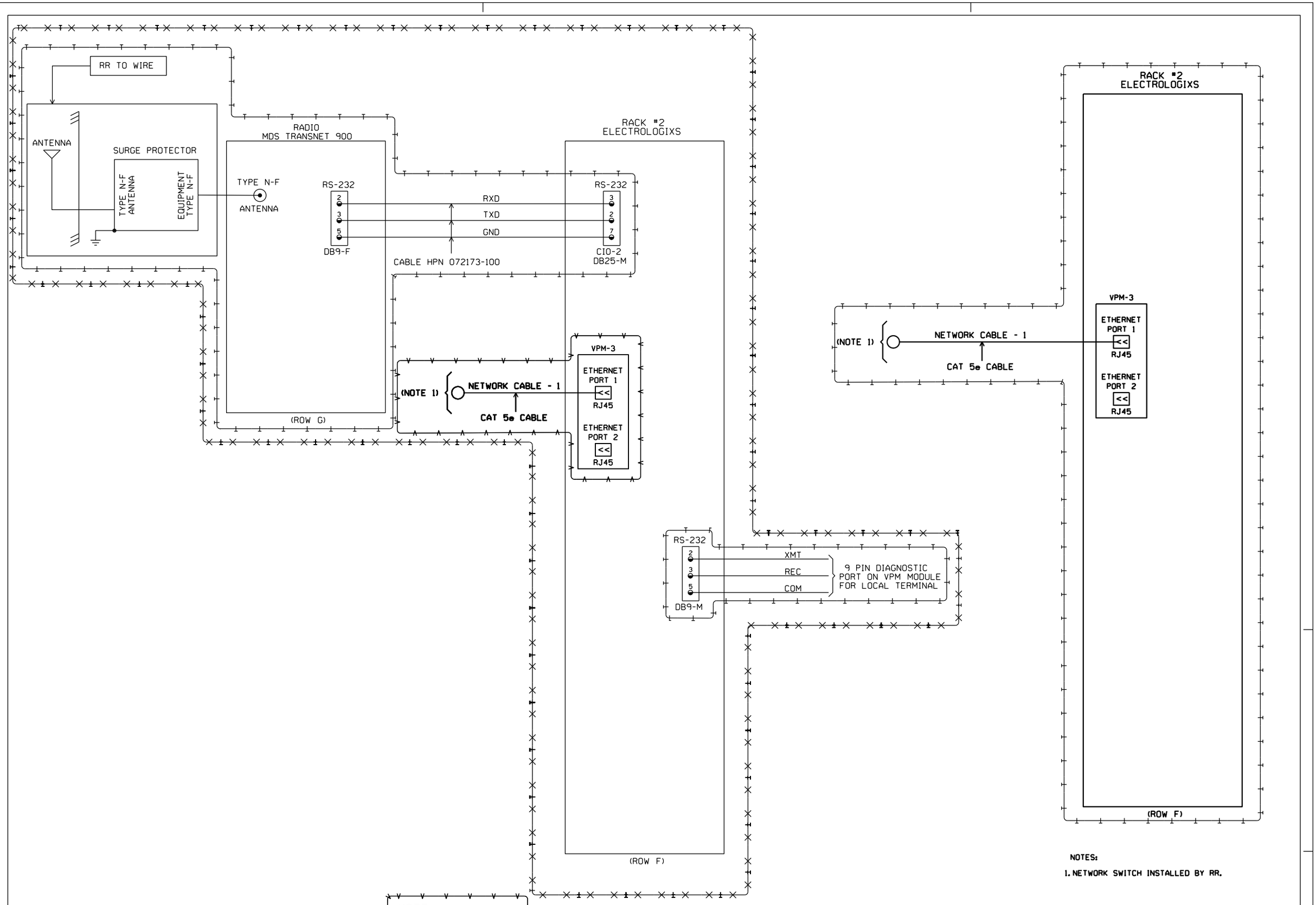

NOTES:

1. NETWORK SWITCH INSTALLED BY RR.

					Designed: 03/06/15 TIER 3 PHASE 4 M.P. 161.00 TO M.P. 147.00 HSR SCOPE CHANGE Rec#: WO#: 22821 IS: MWK / NST / JYJ	Designed: 10/11/12 TIER 3 PHASE 4 M.P.161.00 TO M.P.147.00 UPGRADE XINGS AND CP'S FOR HIGH SPEED RAIL Rec#: WO#: 22821 IS: / MWK / NST / MJF	02-24-09 INSTALL MONITOR RACK FOR XINGS W.O. 87933 MAS	CIRCUIT MODIFICATIONS ARE NOT TO BE MADE WITHOUT AUTHORITY FROM THE OFFICE OF SIGNAL DESIGN	Date: 09-25-08 Des: CRK Chk: AFE: 87933	UNION PACIFIC RAILROAD LAWNDALE, ILLINOIS MAIN STREET SPRINGFIELD SUBDIVISION Office of AVP Engineering-Signal Omaha, Nebraska	Sh.: 10A DOT 290977B MP: 149.75 ID: CSL14975.10AX

WIRING NOTE:
WIRE 30' LONG WIRES TO BSA-4

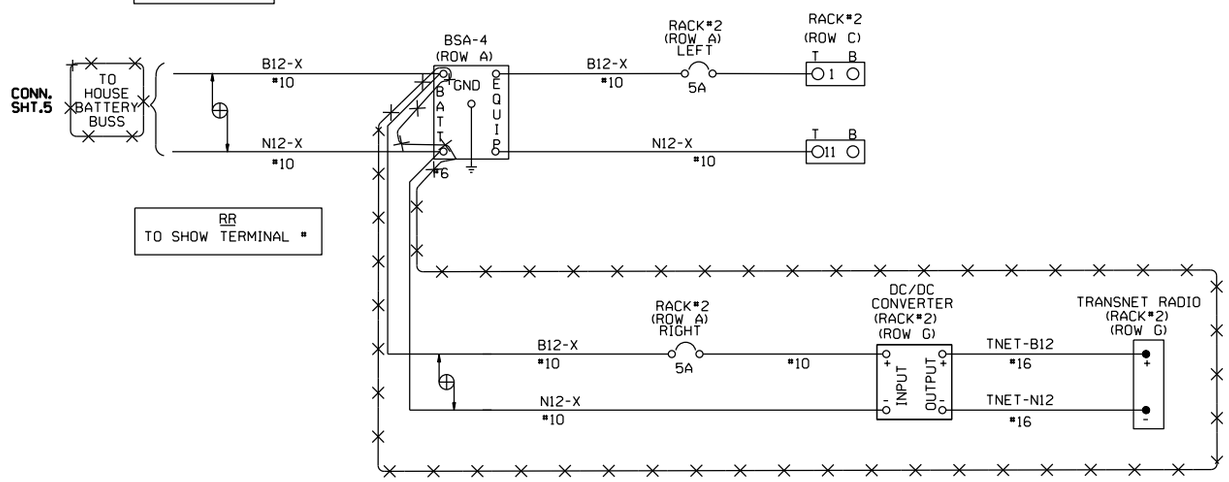

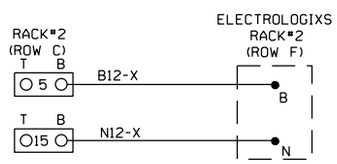

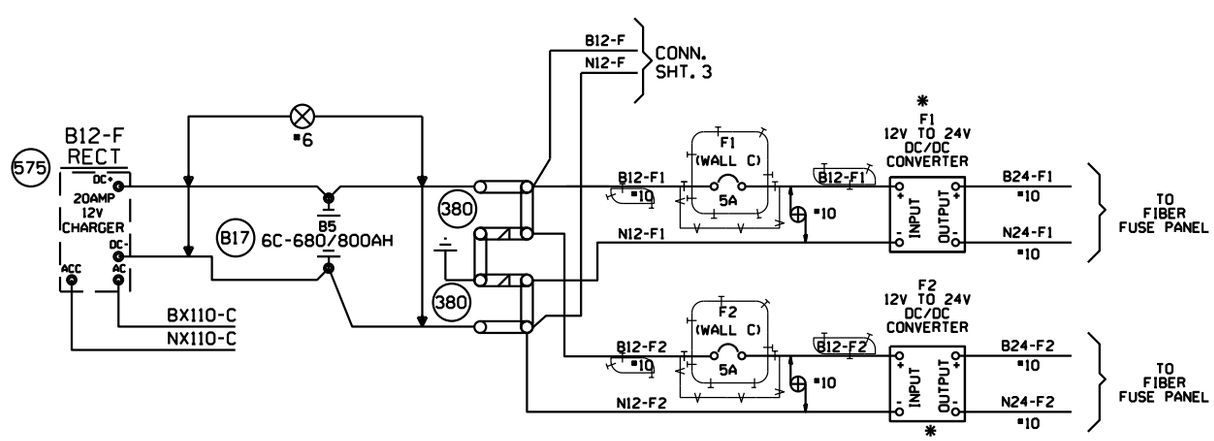

NOTES:

DENOTES TWISTED PAIR

O?? O 2 POSITION WAGO BLOCK

* - TO BE FIELD MOUNTED AFTER IT IS DETERMINED WHERE TO MOUNT.

= IN
= OUT

= IN
= OUT

NEW SHEET

					Designed: 03/08/15 TIER 3 PHASE 4 M.P. 161.00 TO M.P. 147.00 HSR SCOPE CHANGE Rec#: IS: WO#: 22821 MWK/ /NST/JVJ	Designed: 10/11/12 TIER 3 PHASE 4 M.P.161.00 TO M.P.147.00 UPGRADE XINGS AND CP'S FOR HIGH SPEED RAIL Rec#: IS: WO#: 22821 /MWK /NST/MJF	02-24-09 INSTALL MONITOR RACK FOR XINGS W.O. 87933 MAS	CIRCUIT MODIFICATIONS ARE NOT TO BE MADE WITHOUT AUTHORITY FROM THE OFFICE OF SIGNAL DESIGN	Date: 09-25-08 Des: CRK Chk: AFE: 87933	UNION PACIFIC RAILROAD LAWNDALE, ILLINOIS MAIN STREET SPRINGFIELD SUBDIVISION Office of AVP Engineering-Signal Omaha, Nebraska	Sh.: 10B DOT 290977B MP: 149.75 ID: CSL14975.10BX

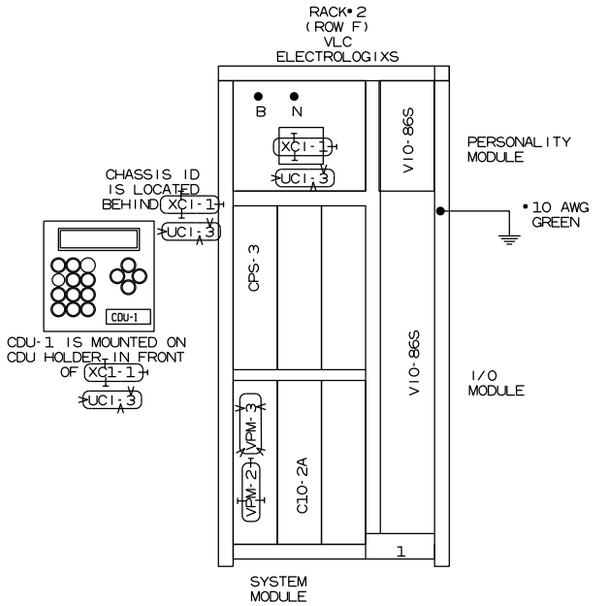

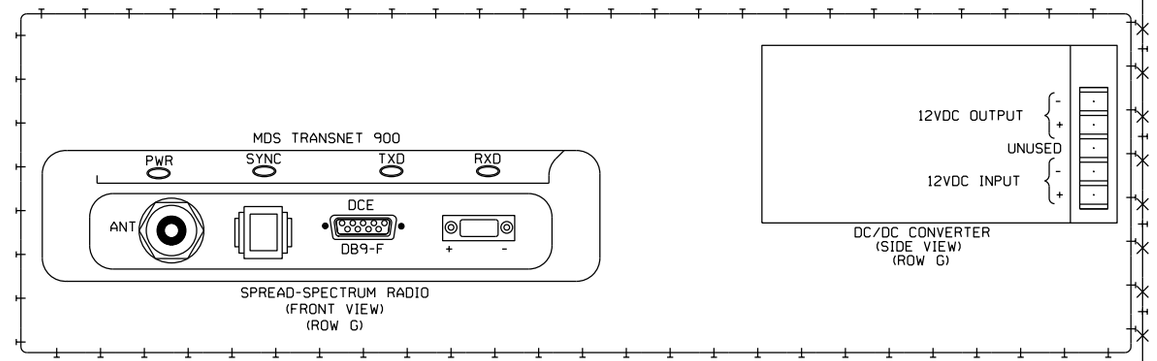

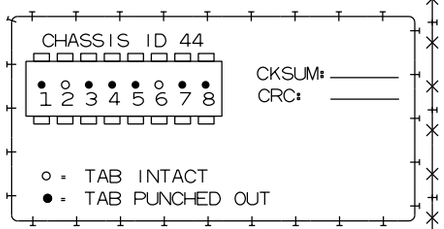

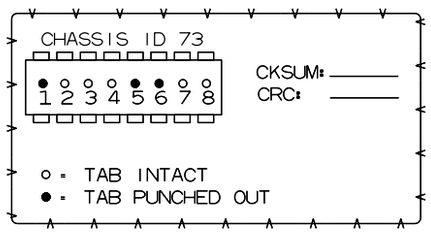

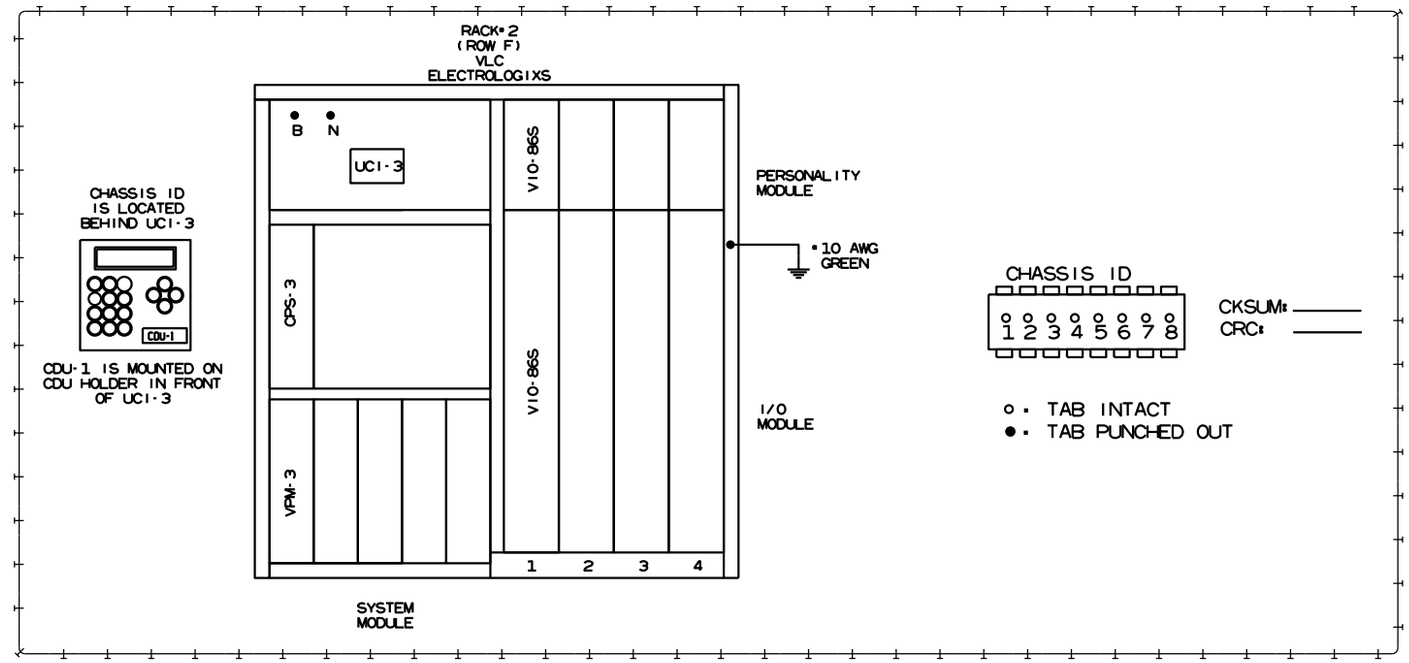

NOTE:
REUSE EXISTING ELECTROLOGIX BOX, BUT REPLACE THE FOLLOWING:
1.XCI-1 WITH UCI-3
2.VPM-2 WITH VPM-3

= IN
= OUT

= IN
= OUT

NEW SHEET

					Designed: 03/06/15 TIER 3 PHASE 4 M.P. 161.00 TO M.P. 147.00 HSR SCOPE CHANGE Rec#: IS: WO#: 22821 MWK/ /NST/JYJ	Designed: 10/11/12 TIER 3 PHASE 4 M.P.161.00 TO M.P.147.00 UPGRADE XINGS AND CP'S FOR HIGH SPEED RAIL Rec#: IS: WO#: 22821 /MWK /NST/MJF	02-24-09 INSTALL MONITOR RACK FOR XINGS W.O. 87933 MAS	CIRCUIT MODIFICATIONS ARE NOT TO BE MADE WITHOUT AUTHORITY FROM THE OFFICE OF SIGNAL DESIGN	Date: 09-25-08 Des: CRK Chk: AFE: 87933	UNION PACIFIC RAILROAD LAWNDALE, ILLINOIS MAIN STREET SPRINGFIELD SUBDIVISION Office of AVP Engineering-Signal Omaha, Nebraska	Sh.: 10C DOT 290977B MP: 149.75 ID: CSL14975.10CX

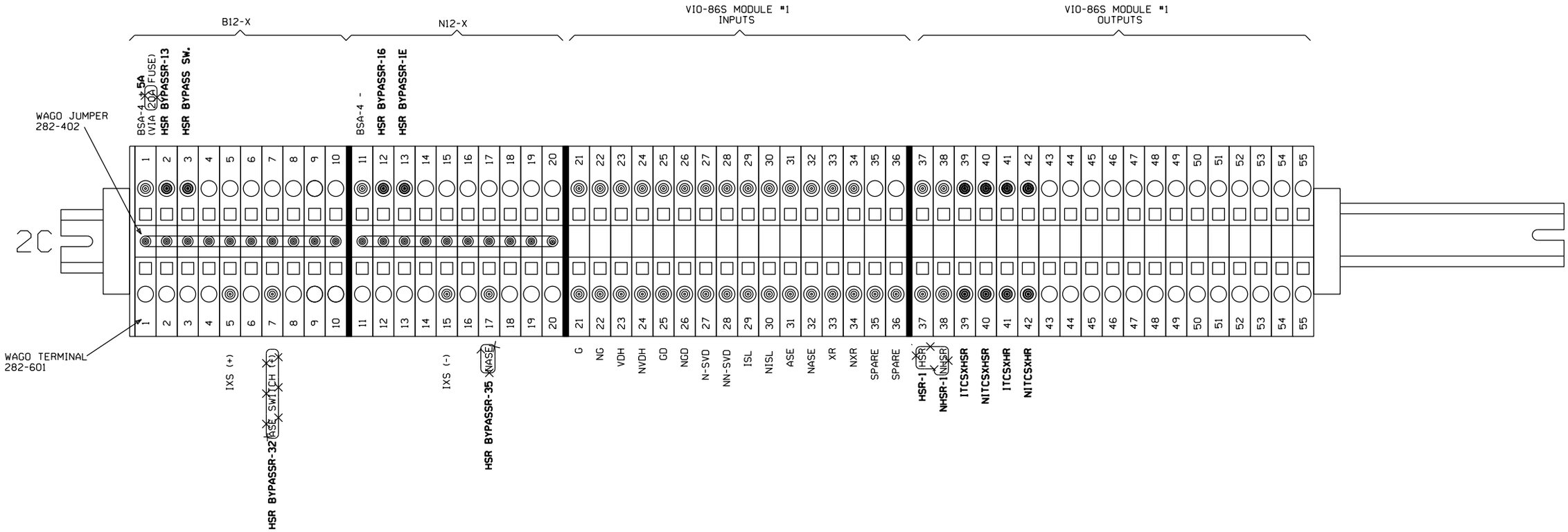

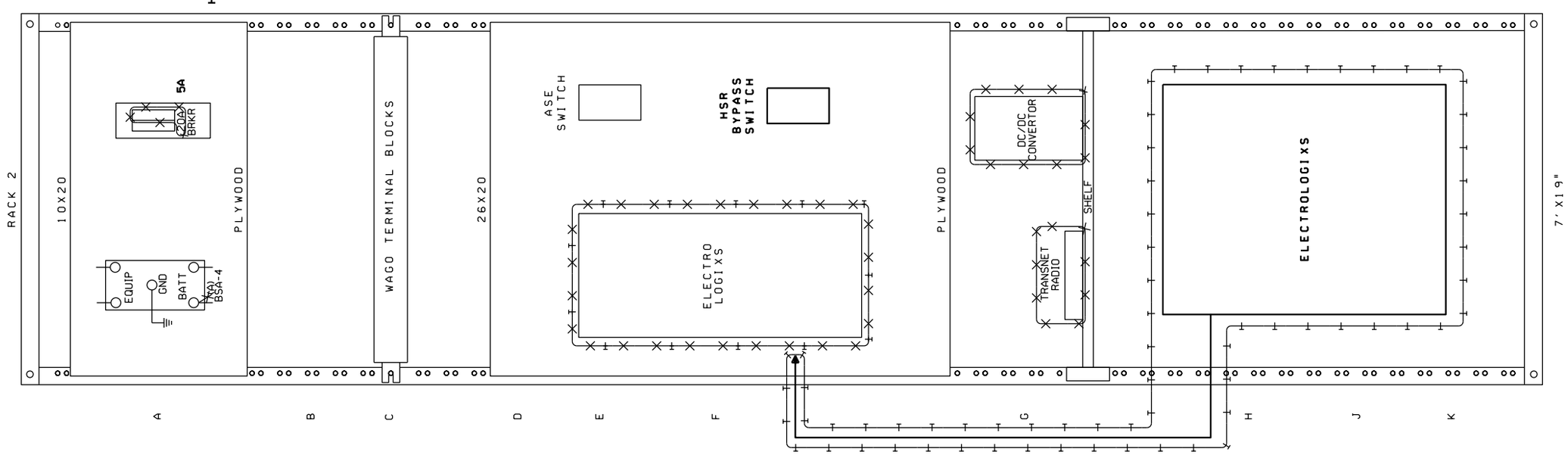

NOTE:
REUSE EXISTING ELECTROLOGIX BOX.

= IN
= OUT

= IN
= OUT

NEW SHEET

					Designed: 03/06/15 TIER 3 PHASE 4 M.P. 161.00 TO M.P. 147.00 HSR SCOPE CHANGE Rec*: WO*: 22821 IS: MWK / NST/JVJ	Designed: 10/11/12 TIER 3 PHASE 4 M.P.161.00 TO M.P.147.00 UPGRADE XINGS AND CP'S FOR HIGH SPEED RAIL Rec*: WO*: 22821 IS: /MWK / /NST/MJF	02-24-09 INSTALL MONITOR RACK FOR XINGS W.O. 87933 MAS	CIRCUIT MODIFICATIONS ARE NOT TO BE MADE WITHOUT AUTHORITY FROM THE OFFICE OF SIGNAL DESIGN	Date: 09-25-08 Des: CRK Chk: AFE: 87933	UNION PACIFIC RAILROAD LAWNDALE, ILLINOIS MAIN STREET SPRINGFIELD SUBDIVISION Office of AVP Engineering-Signal Omaha, Nebraska	Sh.: 10D DOT 290977B MP: 149.75 ID: CSL14975.10DX

EGMS
PROGRAM INFORMATION

PROGRAM VERSION 2.1

EGMS PARAMETERS

PARAMETER	DEFAULT
PRIMARY MODE	DYNAMIC
SECONDARY MODE	TIMED
DIS ENTR DETS	NO
DELAY ON DOWN	01.0
REV DET ENABLE	NO
DYNAMIC EGCT	000
TIMED EGCT	012
XR DET DISABLE	YES
BIDIR DELAY	04.0
ENTRANCE DOWN REQ	YES
EXIT UP REQ	NO
ISL 2 ENABLE	NO
GATO ALARM DELAY	000
GATO GATE DELAY	005

NOTES

1. EGMS ISL1 INPUT: "AND" ISLAND INPUTS FROM ALL TRACKS. NOTE THAT WHEN THIS INPUT IS DE-ENERGIZED THE XR INPUT ON TB2, 15 & 16 MUST ALSO BE DE-ENERGIZED BEFORE THE EXIT GATES MAY BE DRIVEN DOWN.
2. EGMS ISL2 INPUT: MAY BE USED FOR STAND ALONE ISLAND INPUT. THIS INPUT IS NOT DEPENDENT UPON THE STATUS OF XR INPUT ON TB2, 15 & 16. THIS INPUT MUST BE FIELD SELECTED AND ENABLED DURING EGMS SETUP.
3. ALL WIRING TO EGMS TO BE #16 AWG FLEX.

GATE PARAMETERS

GATE	1	2	3	4	5	6	7	8
GATE TYPE	ENTRANCE	ENTRANCE	EXIT	EXIT	NONE•	NONE•	NONE•	NONE•
GATE DIRECTION	SOUTH	NORTH	SOUTH	NORTH	S/N	S/N	S/N	S/N
VERTICAL CHATTER TIME	00.0	00.0	00.0	00.0	00.0	00.0	00.0	00.0
HORIZONTAL CHATTER TIME	01.0	01.0	01.0	01.0	01.0	01.0	01.0	01.0
MAXIMUM ASCENT TIME	025	025	025	025	025	025	025	025
MAXIMUM DESCENT TIME	025	025	025	025	025	025	025	025

• GATE TYPE = "NONE" ALL OTHER PARAMETERS IGNORED

DETECTOR PARAMETERS

	(1) E-1400				(2) E-1400				(3) E-1400				(4) E-1400			
DETECTOR	1	2	3	4	5	6	7	8	9	10	11	12	13	14	15	16
DETECTOR TYPE	ENTR	ENTR	EXIT	EXIT	NONE	NONE	NONE	NONE	NONE	NONE	NONE	NONE	NONE	NONE	NONE	NONE
DETECTOR DIRECTION	S	N	S	N	S/N	S/N	S/N	S/N	S/N	S/N	S/N	S/N	S/N	S/N	S/N	S/N
STRETCH TIME•	01.0	01.0	01.0	01.0	01.0	01.0	01.0	01.0	01.0	01.0	01.0	01.0	01.0	01.0	01.0	01.0

• INCREASE STRETCH TIME AS NECESSARY TO MAINTAIN VEHICLE DETECTION FROM LOOP TO LOOP.
•• DETECTORS 5 - 16 DEFAULT TO "NONE" AND MUST BE CONFIGURED MANUALLY

SEE SHEET 11A FOR NEW EGMS PROGRAM INFORMATION

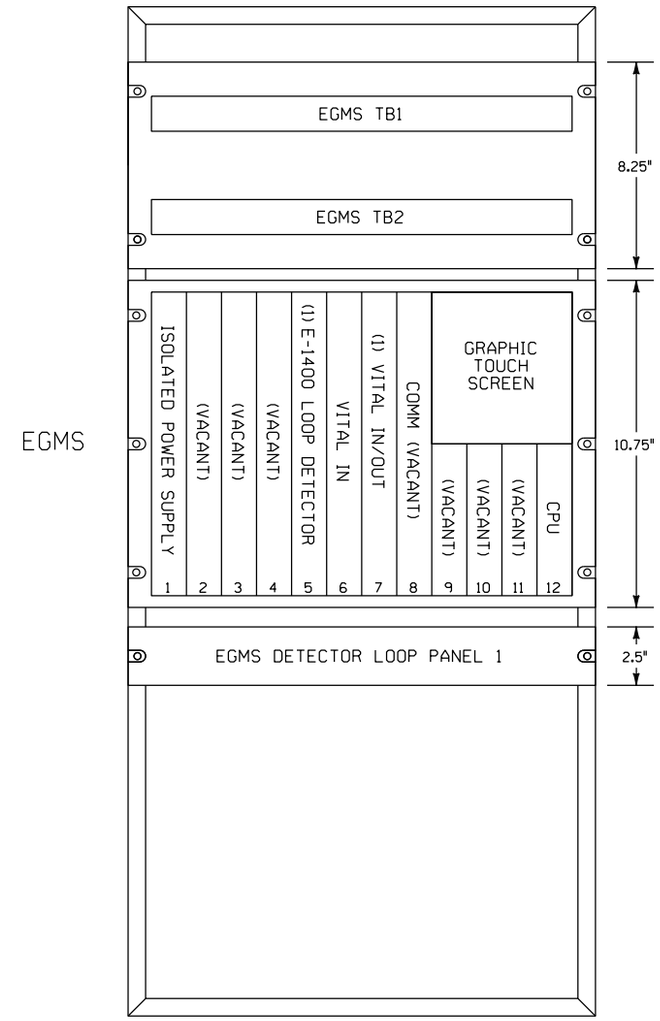

NOTES

1. E-1400 LOOP DETECTOR MODULES AND EGMS DETECTOR LOOP PANELS MAY BE REMOVED AS REQUIRED.

(1) E-1400 SETUP PARAMETERS

FUNCTION	CH. 1	CH. 2	CH. 3	CH. 4
FREQUENCY SETTING	2	4	6	8
SENSITIVIY SETTING	6•	6•	6•	6•
OPTION 1 (TEMP L DISPLAY)	OFF			
OPTION 2 (TEMP ΔL/L DISPLAY)	OFF			
OPTION 3 (NOISE FILTER)	3.00	3.00	3.00	3.00
OPTION 4 (TRACKING)	4.02	4.02	4.02	4.02
OPTION 5 (SENSITIVITY BOOST)	5.00	5.00	5.00	5.00
OPTION 6 (TEMP AUDIBLE SIGNAL)	OFF	OFF	OFF	OFF
CHECKLOOP INTERVAL	005	005	005	005
DETECTOR ID	000			
OPTION 7 (DETECTOR SYNC)	7.00			
OPTION 8 (ISL OPTION)	OFF			
OPTION 9 (SHUNT ENHANCEMENT SE)	OFF	OFF	OFF	OFF
MAIN VITAL OUTPUT DELAY	00.0	00.0	00.0	00.0
MAIN VITAL OUTPUT EXTENSION	00.0	00.0	00.0	00.0
MAIN VITAL OUTPUT MAPPING	10	20	40	80
AUX VITAL OUTPUT MAPPING	001	002	004	008
LOOP FREQUENCY (Khz)				
LOOP INDUCTANCE (MICRO HENRIES)				

SOFTWARE VERSION ---.-
* FIELD VERIFY
** OPTION #8, #9 ONLY AVAILABLE W/ E-1400 SOFTWARE VERSION 4.0 AND HIGHER

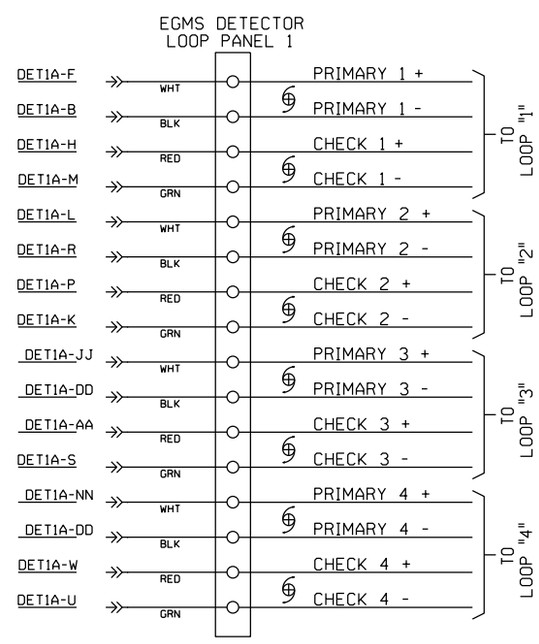

= IN
= OUT

LAWNDALE, ILLINOIS
MAIN STREET
M.P. 149.75
SPRINGFIELD SUBDIVISION
D.O.T.#290-977B

						Designed: 10/11/12 TIER 3 PHASE 4 M.P.161.00 TO M.P.147.00 UPGRADE XINGS AND CP'S FOR HIGH SPEED RAIL Rec#: WO#: 22821 IS: /MWK / /NST/MJF	REV. 2-20-08 INSTALLED MICROLOK PER FIELD AC. REC. #15252 I.S. 3-11-06 GNT/WITT	CIRCUIT MODIFICATIONS ARE NOT TO BE MADE WITHOUT AUTHORITY FROM THE OFFICE OF SIGNAL DESIGN	DES: WITT.IND. DIG: WITT.IND. CHK: J.J.F. A.F.E. 00183 ID= CSL149.75.11X	UNION PACIFIC RAILROAD BLOOMINGTON, ILLINOIS TO VALLEY JCT., ILLINOIS C.T.C. CIRCUITS Office of AVP Engineering-Signal OMAHA NEBR.	DATE 2-20-08 SHEET 11 DWG 149.75 RTE-CSL

EGMS
PROGRAM INFORMATION

PROGRAM VERSION 4.4

EGMS DISPLAY PARAMETERS

PARAMETER	
STARTUP LOGO	UPRR
BACKLIGHT TIMEOUT	015
BUZZER ENABLE	YES
DIRECTION INDICATORS	↓E ↑W
BUNGALOW QUAD	NB EXIT
DISPLAY QZI	NO
LOCAL PREFIX	'R'
REMOTE PREFIX	'T'
CROSSING NAME	MAIN STREET
CROSSING DESCRIPTION	4 QUAD PUB AT GRADE
CROSSING DOT #	290977B

EGMS ALARM PARAMETERS

PARAMETER	
GATO ALARM DELAY	000
GATO GATE DELAY	000
MAX GATE RELEASE	09.0 *
MAX GATE RESPONSE	03.0 *
CYCLE RESTORE	001
MTCD PRESENCE	000
DET FAIL ALARM	YES
DET RESTORE DELAY	000
MAX DET FAILS	000
AUX IN 1 ENABLE	NO
AUX IN 1 RESTORE	000
AUX IN 2 ENABLE	NO
AUX IN 2 RESTORE	000
AUX IN 3 ENABLE	NO
AUX IN 3 RESTORE	000
AUX IN 4 ENABLE	NO
AUX IN 4 RESTORE	000

* ADJUST GATE RELEASE, AND RESPONSE TIMES IN FIELD BASED ON ACTUAL GATE OPERATIONS, AS NECESSARY.

EGMS OPERATIONAL PARAMETERS

PARAMETER	
PRIMARY MODE	DYNAMIC
SECONDARY MODE	NONE
DIS ENTR DETS	NO
DELAY ON DOWN	01.0
REV DET ENABLE	NO
DYNAMIC EGCT	000
TIMED EGCT	012
ISLAND INHIBIT TIME	015
XR DET DISABLE	YES
BIDIR DELAY	04.0
DYN ENTRANCE MONITOR	YES
ENTRANCE DOWN REQ	YES
EXIT UP REQ	NO
EGH SENSE	B12 HOLDS
ISL 2 ENABLE	NO
DUAL EGMS ENABLED	NO

EGMS AUX OUTPUT MAPPING

PARAMETER	
AUX OUT 1 FUNCTION	DET XRISL
AUX OUT 1 SOURCE	BOTH
AUX OUT 2 FUNCTION	DET HLTH
AUX OUT 2 SOURCE	BOTH
AUX OUT 3 FUNCTION	GP
AUX OUT 3 SOURCE	BOTH
AUX OUT 4 FUNCTION	DET OBSTL
AUX OUT 4 SOURCE	BOTH

GATE PARAMETERS

GATE	1(A)	2(B)	3(C)	4(D)	5(E)	6(F)	7(G)	8(H)
GATE TYPE	ENTRANCE	ENTRANCE	EXIT	EXIT	NONE*	NONE*	NONE*	NONE*
GATE DIRECTION	↓E	↑W	↓E	↑W	↓S	↓S	↓S	↓S
VERTICAL CHATTER TIME	01.0	01.0	01.0	01.0	02.0	02.0	02.0	02.0
HORIZONTAL CHATTER TIME	01.0	01.0	01.0	01.0	02.0	02.0	02.0	02.0
MINIMUM ASCENT TIME	003	003	003	003	003	003	003	003
MAXIMUM ASCENT TIME	015	015	015	015	015	015	015	015
MINIMUM DESCENT TIME	003	003	003	003	003	003	003	003
MAXIMUM DESCENT TIME	015	015	015	015	015	015	015	015

* GATE TYPE = "NONE" ALL OTHER PARAMETERS IGNORED

DETECTOR PARAMETERS

	(1) E-1400				(2) E-1400				(3) E-1400				(4) E-1400			
DETECTOR	1	2	3	4	5	6	7	8	9	10	11	12	13	14	15	16
DETECTOR TYPE	ENTR	ENTR	EXIT	EXIT	INT	INT	NONE	NONE	NONE	NONE	NONE	NONE	NONE	NONE	NONE	NONE
DETECTOR DIRECTION	↓E	↑W	↓E	↑W	↓S	↑N	↓S	↓S	↓S	↓S	↓S	↓S	↓S	↓S	↓S	↓S
STRETCH TIME*	01.0	01.0	01.0	01.0	01.0	01.0	01.0	01.0	01.0	01.0	01.0	01.0	01.0	01.0	01.0	01.0
LONG-TERM OBSTRUCTION	001	001	001	001	000	000	000	000	000	000	000	000	000	000	000	000
DISABLE ON DOWN	NO	NO	NO	NO	NO	NO	NO	NO	NO	NO	NO	NO	NO	NO	NO	NO
AUX OUTPUT 1	YES	YES	YES	YES	YES	YES	YES	YES	YES	YES	YES	YES	YES	YES	YES	YES
AUX OUTPUT 2	YES	YES	YES	YES	YES	YES	YES	YES	YES	YES	YES	YES	YES	YES	YES	YES
AUX OUTPUT 3	YES	YES	YES	YES	YES	YES	YES	YES	YES	YES	YES	YES	YES	YES	YES	YES
AUX OUTPUT 4	YES	YES	YES	YES	YES	YES	YES	YES	YES	YES	YES	YES	YES	YES	YES	YES

* INCREASE STRETCH TIME AS NECESSARY TO MAINTAIN VEHICLE DETECTION FROM LOOP TO LOOP.
** DETECTORS 5 - 16 DEFAULT TO "NONE" AND MUST BE CONFIGURED MANUALLY
DETECTORS 5 & 6 DEFAULT TO "INT" WHEN 2TK DEFAULT CONFIGURATION IS SELECTED.
WHEN DETECTOR TYPE IS "NONE", ALL OTHER PARAMETERS IGNORED.

NEW SHEET

Designed: 10/11/12
TIER 3 PHASE 4
M.P.161.00 TO
M.P.147.00
UPGRADE XINGS AND
CP'S FOR HIGH
SPEED RAIL
Rec#: WO#: 22821
IS: / MWK /NST/MJF

MODIFICATION LEVEL	
O. A. LAST LEVEL CHECKED	DU
LAST LEVEL MOD THIS TYPICAL	DU
LAST LEVEL BY DESIGNER	DU
CHANGED FROM TYPICAL?	Y

REV 01.24.11 4K 2TKEGMS.8

CIRCUIT MODIFICATIONS ARE NOT TO BE MADE WITHOUT AUTHORITY FROM THE OFFICE OF SIGNAL DESIGN

Date: 10/11/12
Des: NST
Chk: MWK
AFE: 22821

UNION PACIFIC RAILROAD
LAWNDALE, ILLINOIS
MAIN STREET
SPRINGFIELD SUBDIVISION
Office of AVP Engineering - Signal Omaha, Nebraska

Sh.: 11A
DOT 290977B
MP: 149.75
ID: CSL14975.11AX

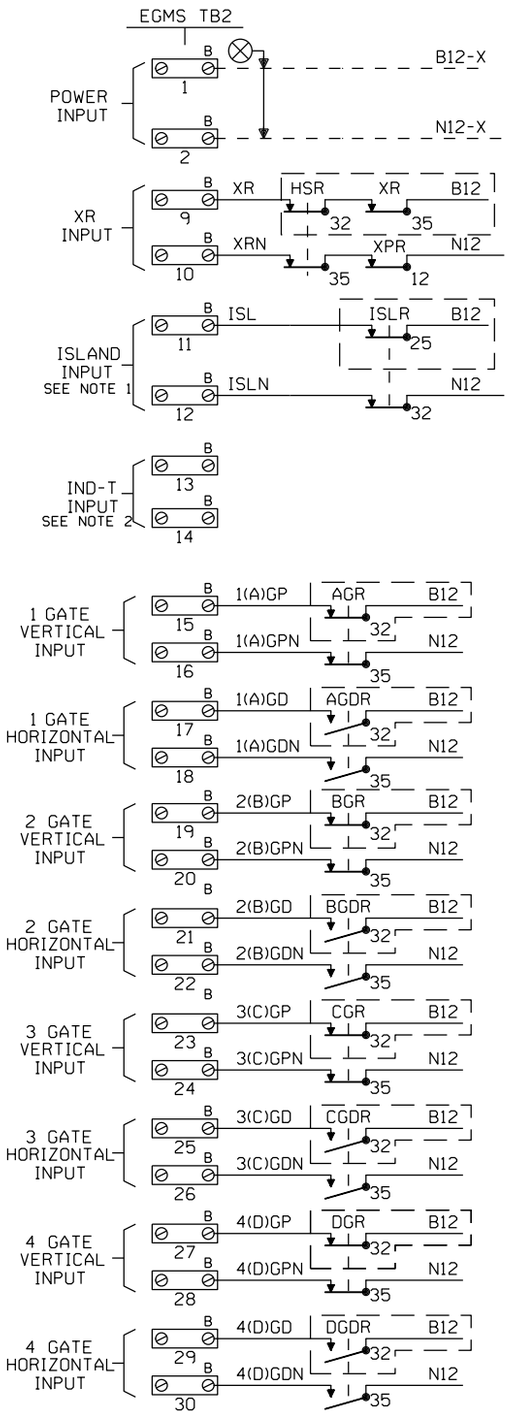

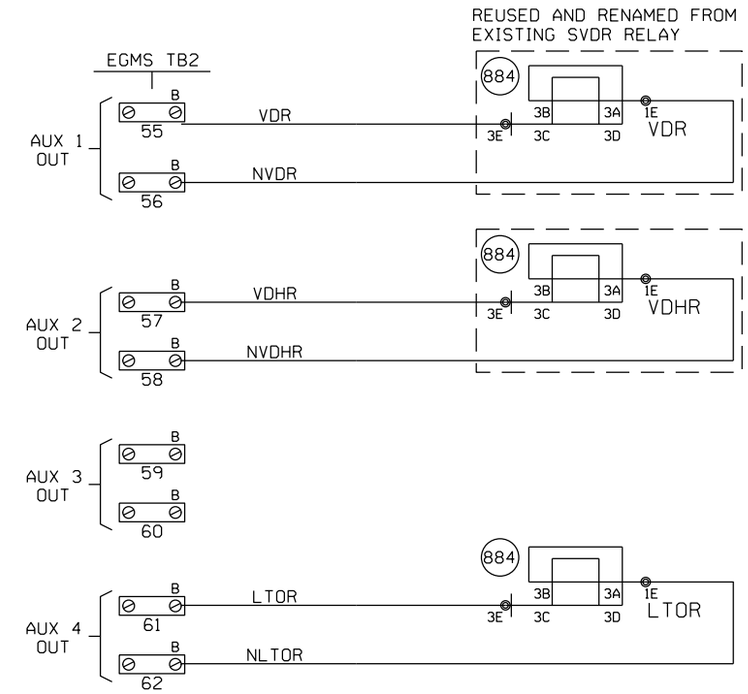

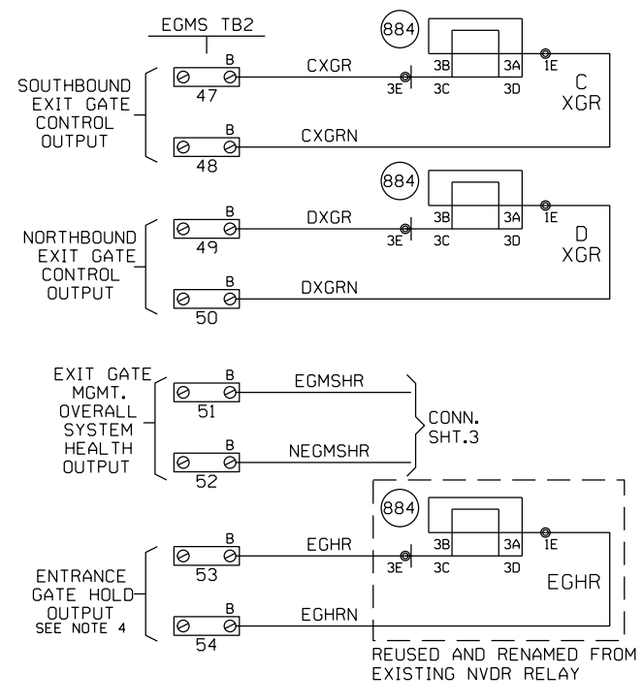

NOTES

1. EGMS ISL1 INPUT: "AND" ISLAND INPUTS FROM ALL TRACKS. NOTE THAT WHEN THIS INPUT IS DE-ENERGIZED THE XR INPUT ON TB2, 9 & 10 MUST ALSO BE DE-ENERGIZED BEFORE THE EXIT GATES MAY BE DRIVEN DOWN.
2. EGMS ISL2 INPUT: MAY BE USED FOR STAND ALONE ISLAND INPUT. THIS INPUT IS NOT DEPENDENT UPON THE STATUS OF XR INPUT ON TB2, 9 & 10. THIS INPUT MUST BE FIELD SELECTED AND ENABLED DURING EGMS SETUP.
3. ALL WIRING TO EGMS TO BE #16 AWG FLEX.
4. ENTRANCE GATE HOLD (EGH) CAN BE PROGRAMMED AS A NORMALLY ENERGIZED OR NORMALLY DE-ENERGIZED OUTPUT.

— — — = REUSED AND REDRAWN FROM SHT.2

NEW SHEET

Designed: 10/11/12
TIER 3 PHASE 4
M.P.161.00 TO M.P.147.00
UPGRADE XINGS AND CP'S FOR HIGH SPEED RAIL
Rec#: WO#: 22821
IS: /MWK / /NST/MJF

MODIFICATION LEVEL	
O. A. LAST LEVEL CHECKED	DU
LAST LEVEL MOD THIS TYPICAL	DU
LAST LEVEL BY DESIGNER	DU
CHANGED FROM TYPICAL?	Y

REV 01.24.11 4K 2TKEGMS.8A

CIRCUIT MODIFICATIONS ARE NOT TO BE MADE WITHOUT AUTHORITY FROM THE OFFICE OF SIGNAL DESIGN

Date: 10/11/12
Des: NST
Chk: MWK
AFE: 22821

UNION PACIFIC RAILROAD
LAWNDALE, ILLINOIS
MAIN STREET
SPRINGFIELD SUBDIVISION
Office of AVP Engineering - Signal Omaha, Nebraska

Sh.: 11B
DOT 290977B
MP: 149.75
ID: CSL14975.11BX

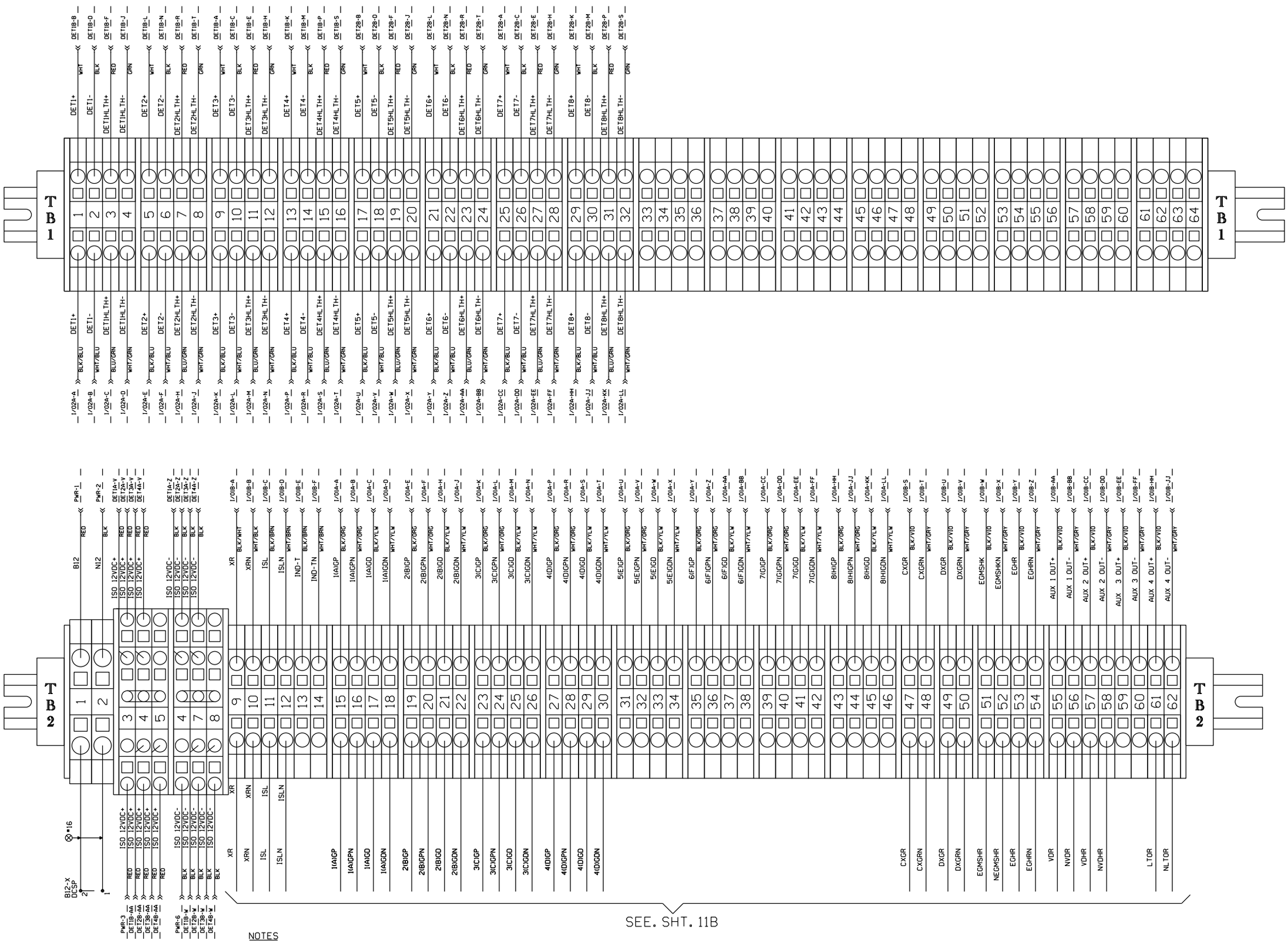

NOTES

1. TB1 PROVIDES AN EXTERNAL PASS THROUGH BETWEEN THE E-1400 MODULES AND THE VITAL INPUT MODULE IN CHASSIS POSITION 6. EGMS OR EGMS+ UNITS CONFIGURED FOR LESS THAN 4 EACH E-1400 MODULES WILL ONLY BE WIRED AS REQUIRED.
2. TB2-3 THROUGH TB2-8 PROVIDE A CONNECTION BUS FOR INTERNAL SUPPLY VOLTAGES AND MUST NOT BE USED TO SUPPLY OTHER CIRCUITS.

NEW SHEET

					Designed: 10/11/12 TIER 3 PHASE 4 M.P.161.00 TO M.P.147.00 UPGRADE XINGS AND CP'S FOR HIGH SPEED RAIL Rec#: WO#: 22821 IS: /MWK / /NST/MJF	MODIFICATION LEVEL		CIRCUIT MODIFICATIONS ARE NOT TO BE MADE WITHOUT AUTHORITY FROM THE OFFICE OF SIGNAL DESIGN	Date: 10/11/12	UNION PACIFIC RAILROAD	Sh.: 11C
						D.A. LAST LEVEL CHECKED	DU		Des: NST	LAWNDALE, ILLINOIS MAIN STREET SPRINGFIELD SUBDIVISION	DOT 290977B
						LAST LEVEL MOD THIS TYPICAL	DU		Chk: MWK		MP: 149.75
						LAST LEVEL BY DESIGNER	DU		AFE: 22821	Office of AVP Engineering - Signal Omaha, Nebraska	ID: CSL14975.11CX
						CHANGED FROM TYPICAL?	Y				
						REV 01.24.11 4K 2TKEGMS.9C					

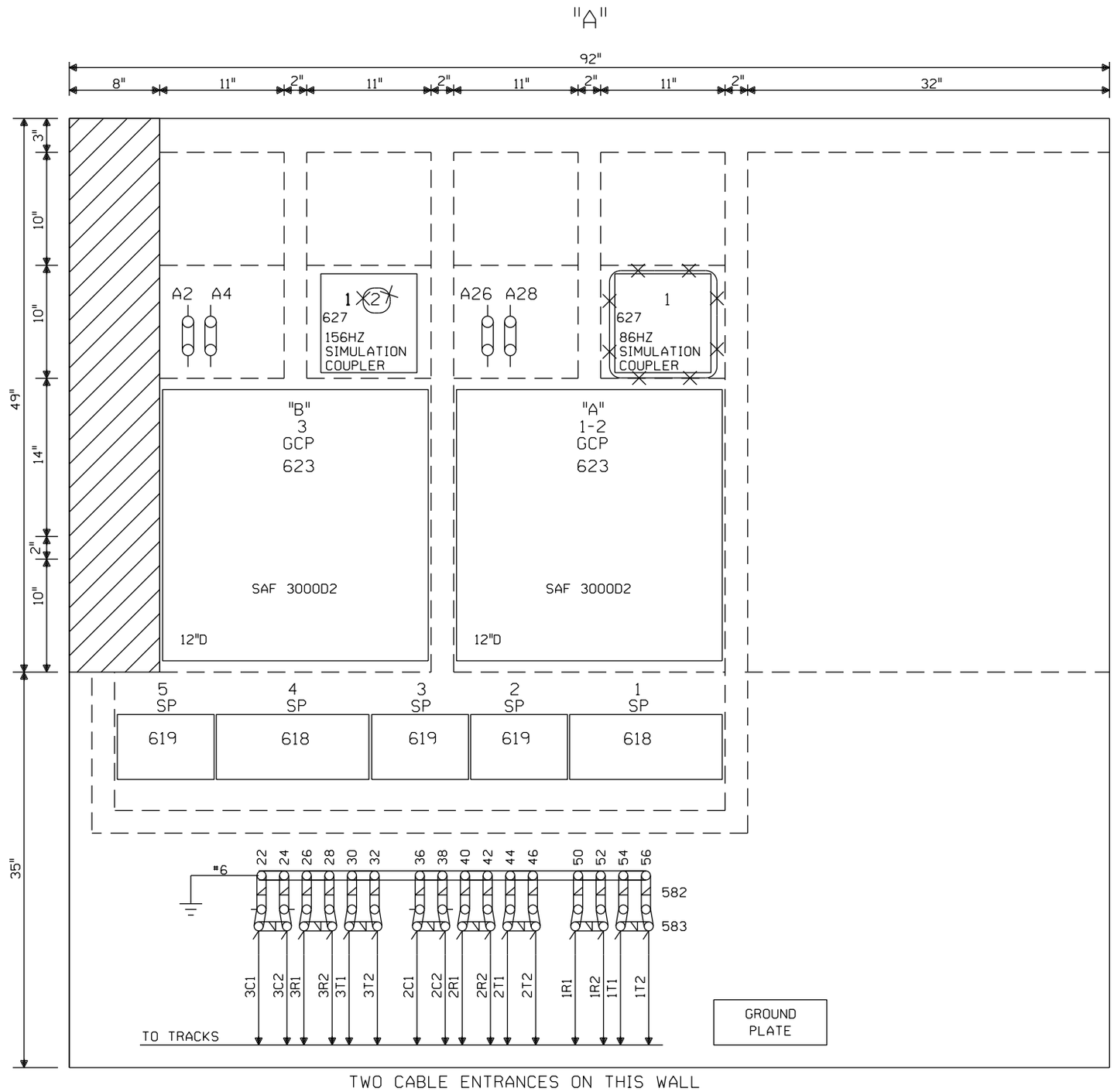

TWO CABLE ENTRANCES ON THIS WALL

= IN
= OUT

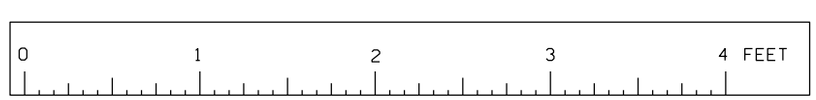

SCALE: 1.5 INCHES = 1 FOOT

LAWNDALE, ILLINOIS
MAIN STREET
M.P.149.75
SPRINGFIELD SUBDIVISION
D.O.T.#290 977B

				Designed: 10/11/12 TIER 3 PHASE 4 M.P.161.00 TO M.P.147.00 UPGRADE XINGS AND CP'S FOR HIGH SPEED RAIL Rec#: WO#: 22821 IS: /MWK / /NST/MJF	REV. 2-20-08 UPGRADED CROSSING PROTECTION FOR THE HIGH SPEED RAIL PROJ. FROM MAZONIA TO SPRINGFIELD. AFE #00183 REC. #15252 I.S. 3-11-06 JJF CM/WITT/WITT/JNM	MODIFICATION LEVEL		CIRCUIT MODIFICATIONS ARE NOT TO BE MADE WITHOUT AUTHORITY FROM THE OFFICE OF SIGNAL DESIGN	DES: WITT.IND.	UNION PACIFIC RAILROAD BLOOMINGTON, ILLINOIS TO VALLEY JCT., ILLINOIS C.T.C. CIRCUITS	DATE 4-1-02
						Q.A. LAST LEVEL CHK'D.	DA		DIG: WITT.IND.		SHEET 12
						LAST LEVEL MOD. THIS TYP.	CZ		CHK: J.J.F.		DWG 149.75
						LAST LEVEL BY DESIGNER.	DD		A.F.E. 00183		RTE-CSL
						CHANGED FROM TYP.? Y/N	Y		ID= CSL14975.12X	Office of AVP Engineering-Signal OMAHA NEBR.	

(REV. 7-9-00) (HOUSE.TYP)

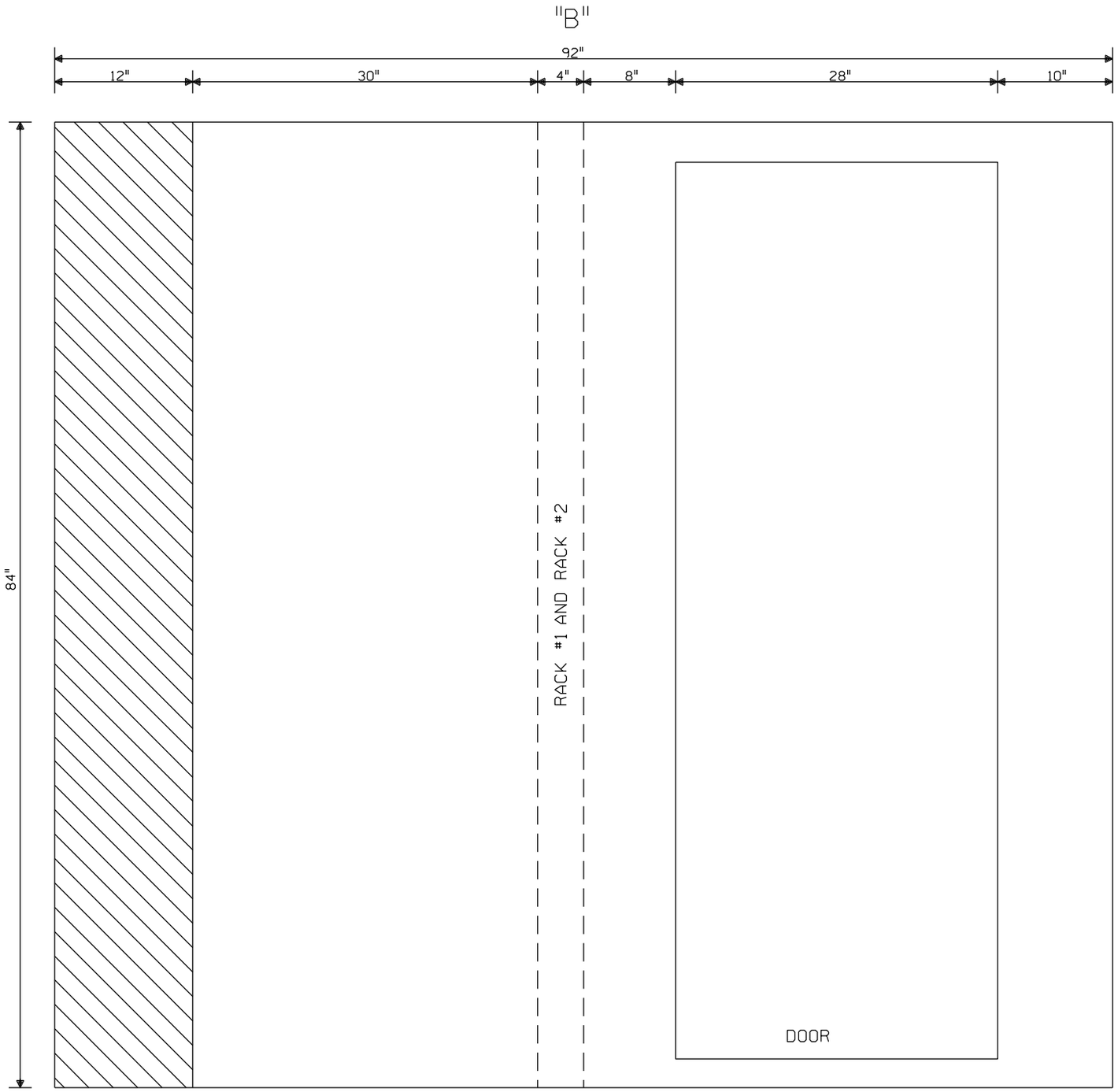

PLAN VIEW
8'x8' HOUSE
—NO SCALE—

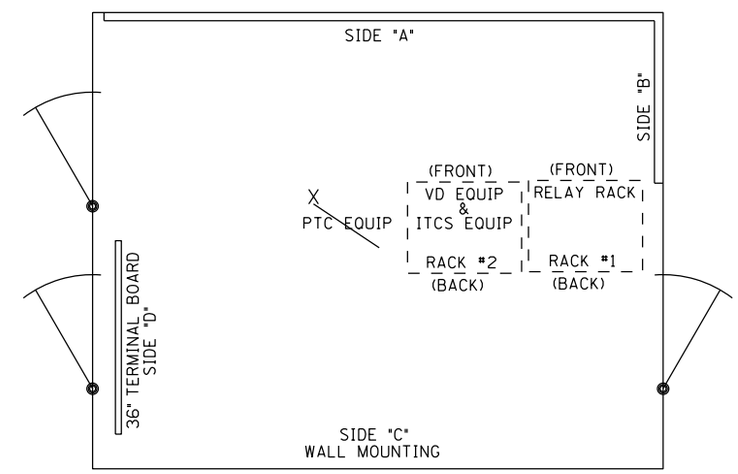

FIELD TO VERIFY LOCATION OF ANTENNAS, AND SURGE SUPPRESSORS FOR ANTENNAS.

——— = IN

—X—X— = OUT

0 1 2 3 4 FEET

SCALE: 1.5 INCHES = 1 FOOT

LAWNDALE, ILLINOIS
MAIN STREET
M.P.149.75
SPRINGFIELD SUBDIVISION
D.O.T.#290 977B

				02-24-09 INSTALL MONITOR RACK FOR XINGS W.O. 87933 MAS	REV. 2-20-08 UPGRADED CROSSING PROTECTION FOR THE HIGH SPEED RAIL PROJ. FROM MAZONIA TO SPRINGFIELD. AFE #00183 REC. #15252 I.S. 3-11-06 JJF CM/WITT/WITT/JNM	MODIFICATION LEVEL		CIRCUIT MODIFICATIONS ARE NOT TO BE MADE WITHOUT AUTHORITY FROM THE OFFICE OF SIGNAL DESIGN	DES: WITT.IND.	UNION PACIFIC RAILROAD BLOOMINGTON, ILLINOIS TO VALLEY JCT., ILLINOIS C.T.C. CIRCUITS	DATE 4-1-02
						Q.A. LAST LEVEL CHK'D.	DA		DIG: WITT.IND.		SHEET 13
						LAST LEVEL MOD. THIS TYP.	CZ		CHK: J.J.F.		DWG 149.75
						LAST LEVEL BY DESIGNER.	DD		A.F.E. 00183		RTE-CSL
						CHANGED FROM TYP.? Y/N	Y		ID= CSL14975.13X	Office of AVP Engineering-Signal OMAHA NEBR.	

(REV. 7-9-00) (HOUSE.TYP)

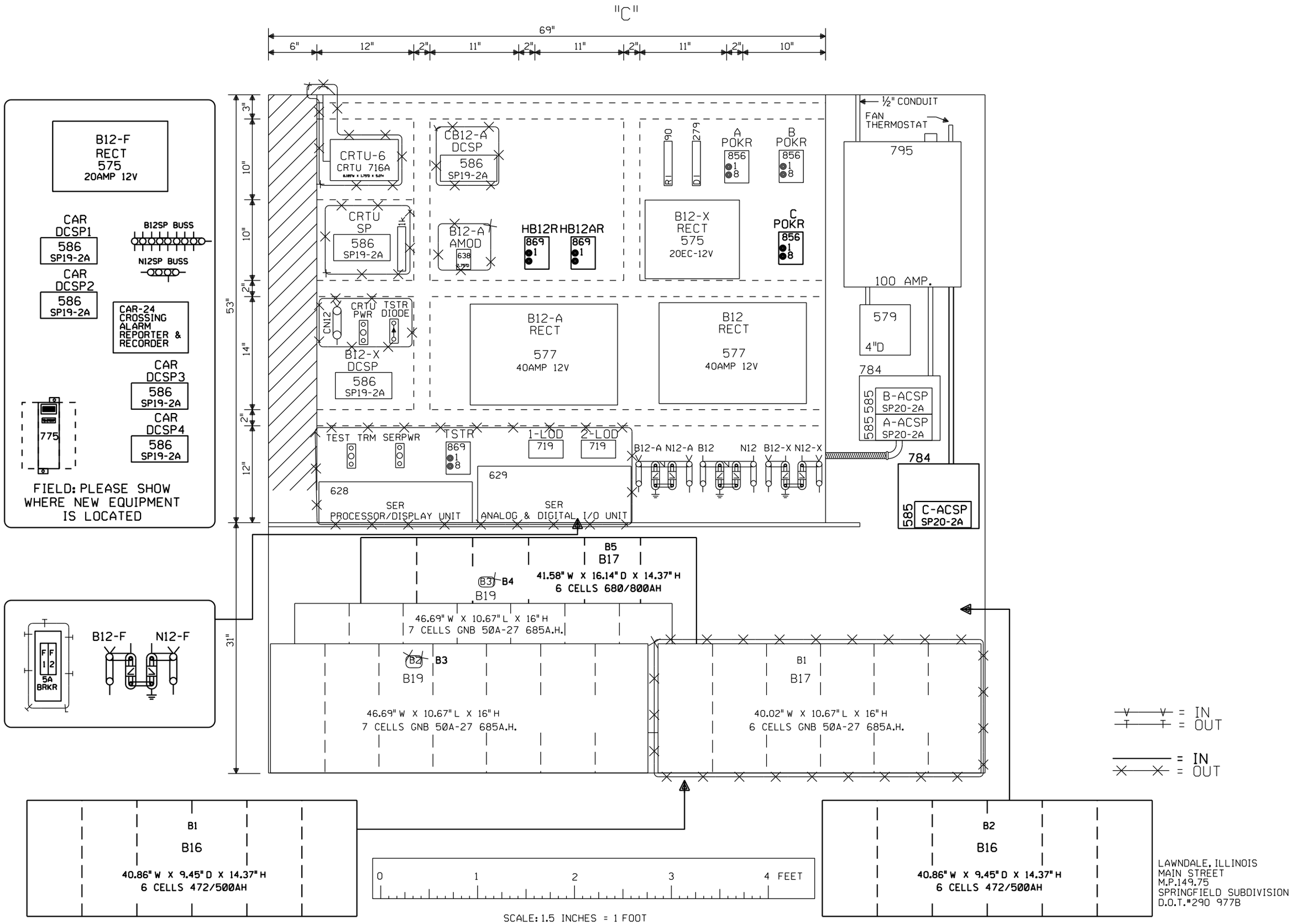

LAWNDALE, ILLINOIS
MAIN STREET
M.P.149.75
SPRINGFIELD SUBDIVISION
D.O.T.#290 977B

Designed: 03/06/15 TIER 3 PHASE 4 M.P.161.00 TO M.P.147.00 HSR SCOPE CHANGE Rec#: WO#: 22821 IS: MWK/ /NST/JVJ	Designed: 10/11/12 TIER 3 PHASE 4 M.P.161.00 TO M.P.147.00 UPGRADE XINGS AND CP'S FOR HIGH SPEED RAIL Rec#: WO#: 22821 IS: /MWK / /NST/MJF	REV. 2-20-08 UPGRADED CROSSING PROTECTION FOR THE HIGH SPEED RAIL PROJ. FROM MAZONIA TO SPRINGFIELD. AFE #00183 REC. #15252 I.S. 3-11-06 JJF CM/WITT/WITT/JNM	

MODIFICATION LEVEL	
Q.A. LAST LEVEL CHK'D.	DA
LAST LEVEL MOD. THIS TYP.	CZ
LAST LEVEL BY DESIGNER.	DD
CHANGED FROM TYP.? Y/N	Y

CIRCUIT MODIFICATIONS ARE NOT TO BE MADE WITHOUT AUTHORITY FROM THE OFFICE OF SIGNAL DESIGN

DES: WITT.IND.
DIG: WITT.IND.
CHK: J.J.F.
A.F.E. 00183
ID= CSL14975.14X

UNION PACIFIC RAILROAD
BLOOMINGTON, ILLINOIS TO
VALLEY JCT., ILLINOIS
C.T.C. CIRCUITS
Office of AVP Engineering-Signal OMAHA NEBR.

DATE 4-1-02
SHEET 14
DWG 149.75
RTE-CSL

(REV. 7-9-00) (HOUSE.TYP)

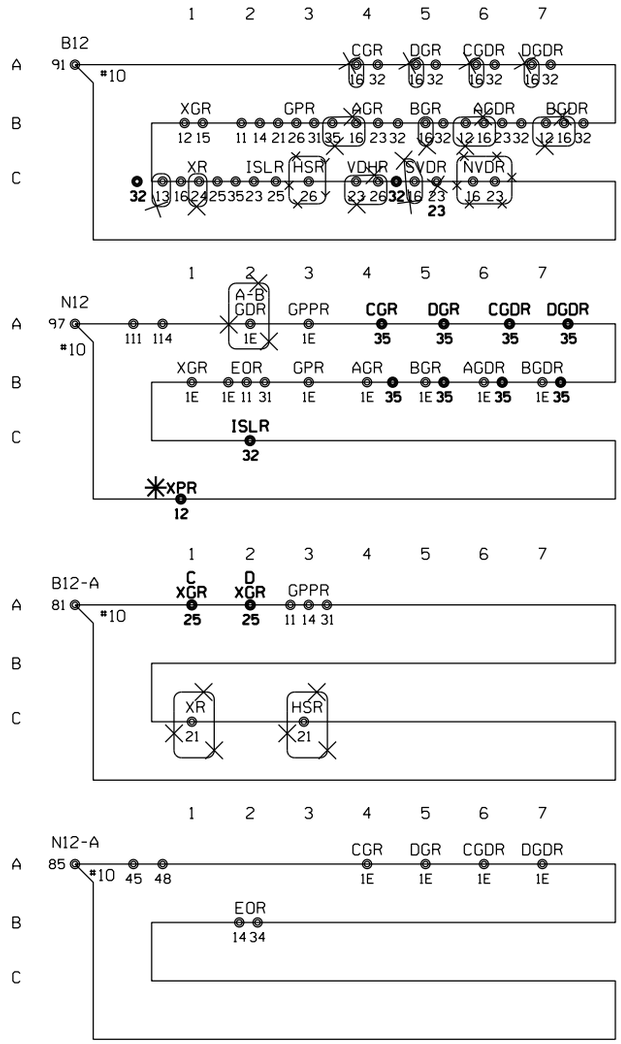

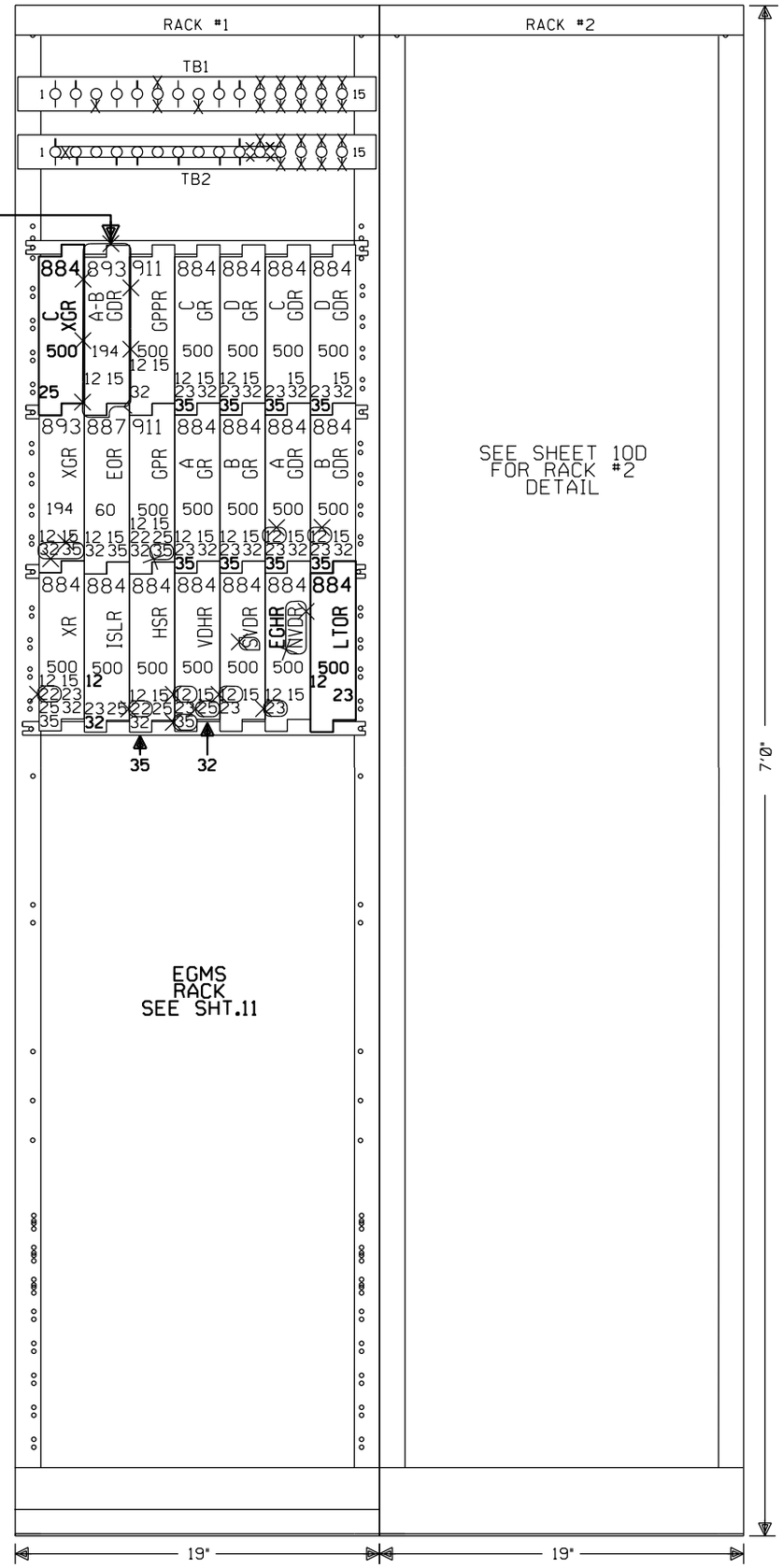

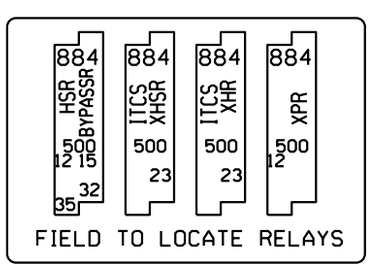

✱ = FIELD TO DETERMINE BUSS CONNECTIVITY AFTER LOCATING RELAY

= IN

= OUT

= IN

= OUT

LAWNDALE, ILLINOIS
MAIN STREET
M.P.149.75
SPRINGFIELD SUBDIVISION
D.O.T.#290 977B

			Designed: 10/11/12 TIER 3 PHASE 4 M.P.161.00 TO M.P.147.00 UPGRADE XINGS AND CP'S FOR HIGH SPEED RAIL Rec#: WO#: 22821 IS: /MWK /NST/MJF	02-24-09 INSTALL MONITOR RACK FOR XINGS W.O. 87933 MAS	REV. 2-20-08 UPGRADED CROSSING PROTECTION FOR THE HIGH SPEED RAIL PROJ. FROM MAZONIA TO SPRINGFIELD. AFE #00183 REC. #15252 I.S. 3-11-06 JJF CM/WITT/WITT/JNM	MODIFICATION LEVEL		CIRCUIT MODIFICATIONS ARE NOT TO BE MADE WITHOUT AUTHORITY FROM THE OFFICE OF SIGNAL DESIGN	DES: WITT.IND.	UNION PACIFIC RAILROAD BLOOMINGTON, ILLINOS TO VALLEY JCT., ILLINOIS C.T.C. CIRCUITS	DATE 4-1-02
						Q.A. LAST LEVEL CHK'D.	DA		DIG: WITT.IND.		SHEET 15
						LAST LEVEL MOD. THIS TYP.	CZ		CHK: J.J.F.		DWG 149.75
						LAST LEVEL BY DESIGNER.	DD		A.F.E. 00183		RTE-CSL
						CHANGED FROM TYP.? Y/N	Y		ID= CSL14975.15X	Office of AVP Engineering-Signal OMAHA NEBR.	

(REV. 7-9-00) (HOUSE.TYP)

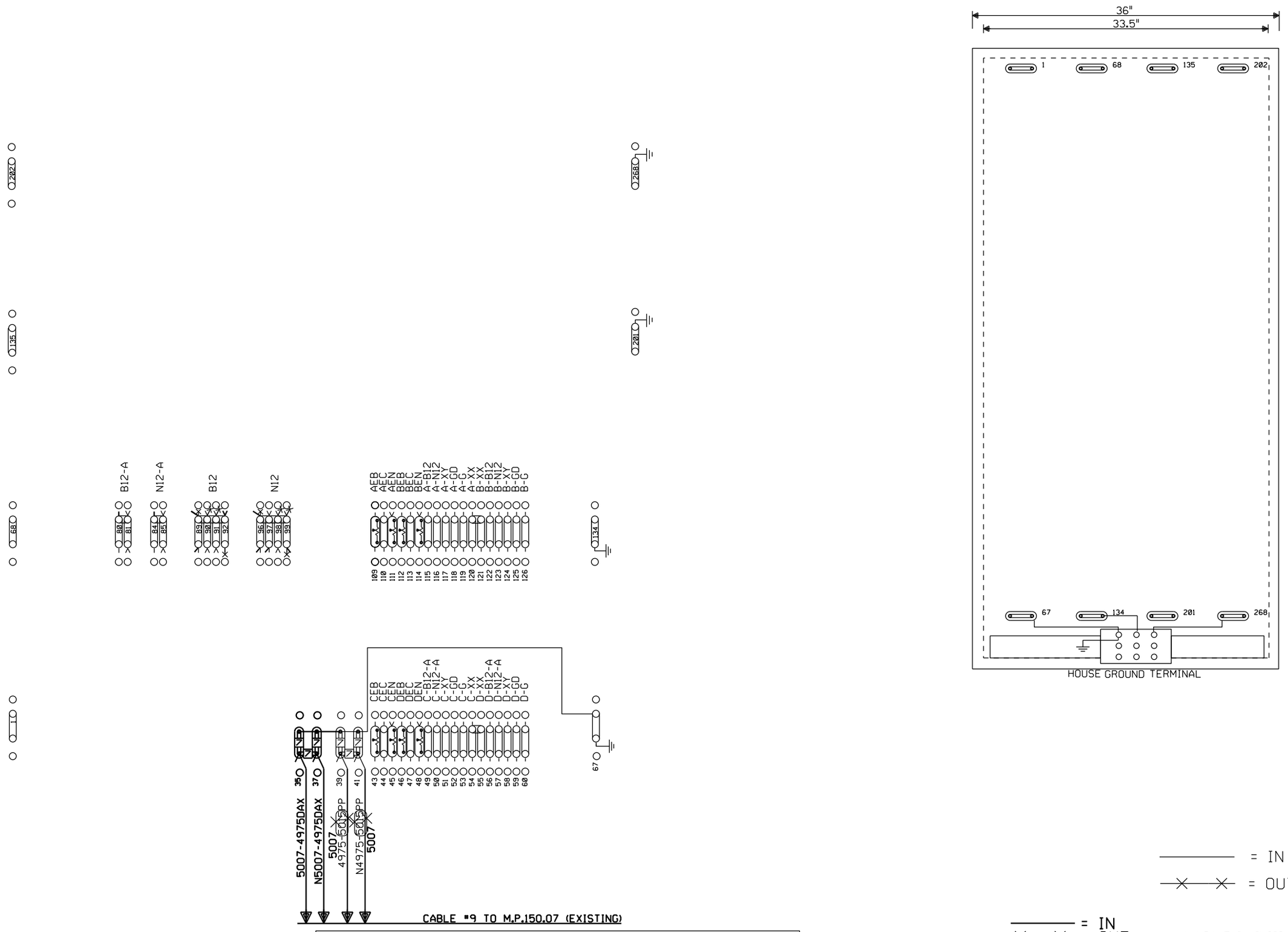

= IN
= OUT

LAWNDALE, ILLINOIS
MAIN STREET
M.P.149.75
SPRINGFIELD SUBDIVISION
D.O.T.#290 977B

			Designed: 10/11/12 TIER 3 PHASE 4 M.P.161.00 TO M.P.147.00 UPGRADE XINGS AND CP'S FOR HIGH SPEED RAIL Rec#: WO#: 22821 IS: MWK / /NST/MJF	02-24-09 INSTALL MONITOR RACK FOR XINGS W.O. 87933 MAS	REV. 2-20-08 UPGRADED CROSSING PROTECTION FOR THE HIGH SPEED RAIL PROJ. FROM MAZONIA TO SPRINGFIELD. AFE #00183 REC. #15252 I.S. 3-11-06 JJF CM/WITT/WITT/JNM	MODIFICATION LEVEL Q.A. LAST LEVEL CHK'D. DA LAST LEVEL MOD. THIS TYP. CZ LAST LEVEL BY DESIGNER. DD CHANGED FROM TYP.? Y/N Y	CIRCUIT MODIFICATIONS ARE NOT TO BE MADE WITHOUT AUTHORITY FROM THE OFFICE OF SIGNAL DESIGN	DES: WITT.IND. DIG: WITT.IND. CHK: J.J.F. A.F.E. 00183 ID= CSL14975.16X	UNION PACIFIC RAILROAD BLOOMINGTON, ILLINOIS TO VALLEY JCT., ILLINOIS C.T.C. CIRCUITS Office of AVP Engineering-Signal OMAHA NEBR.	DATE 4-1-02 SHEET 16 DWG 149.75 RTE-CSL

(REV. 7-9-00) (HOUSE.TYP)