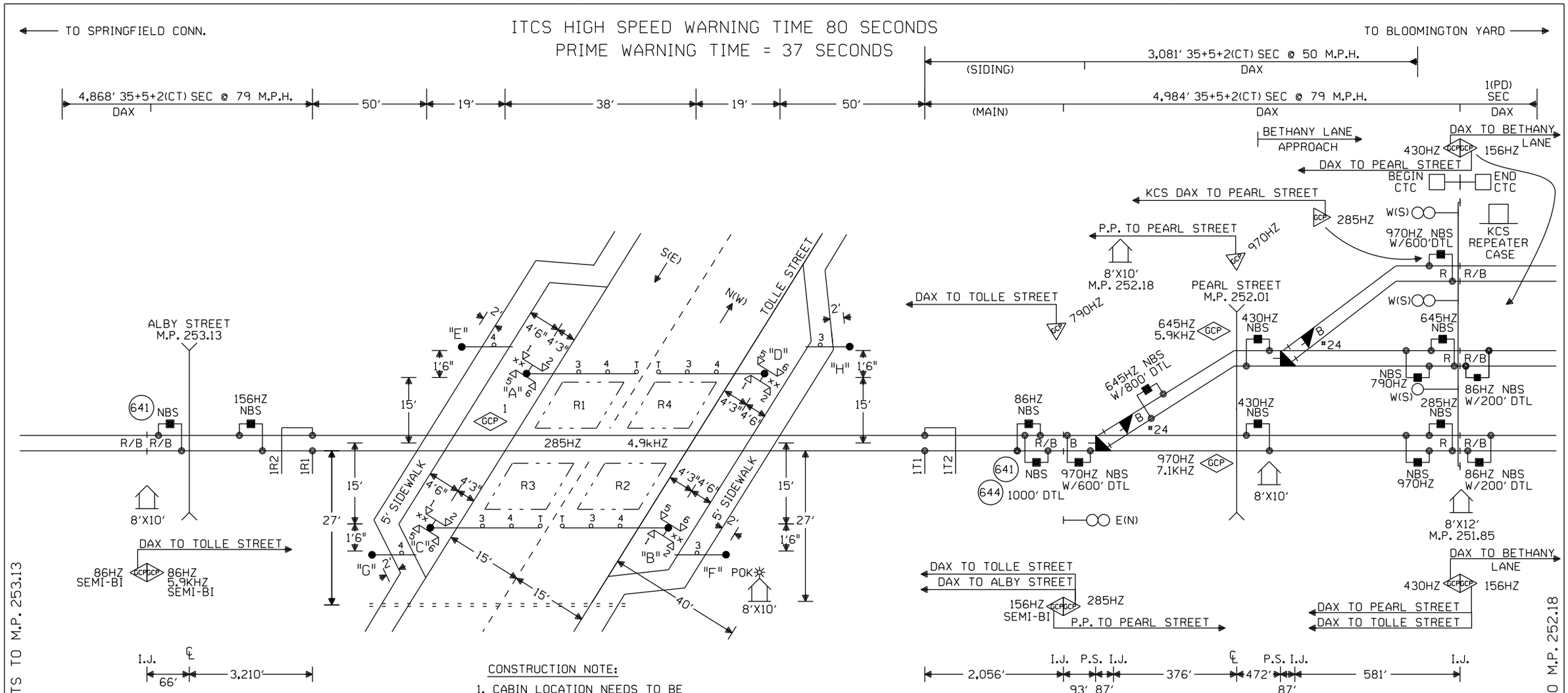

NOTES:

⊗ = TWISTED WIRES
INSULATED 1 TWIST PER FT.
ALL TRACK WIRES 2C. #6

TRANSMITTER AND RECEIVER LEADS TO BE SEPARATED BY AT LEAST 12" IN TRENCH, LENGTHS SHOULD NOT EXCEED MANUFACTURES RECOMMENDATION.

TOP OF FOUNDATION TO BE AT SAME ELEVATION AS THE SURFACE OF THE TRAVELED WAY & NO MORE THAN 4" ABOVE THE SURFACE OF THE GROUND.

ALL BUNGALOW WIRING TO BE #16 AWG FLEX UNLESS OTHERWISE SPECIFIED EXCEPT ALL GROUND WIRE TO BE #6 AWG FLEX OR LARGER.

ALL WIRING IN GATE MECHANISM TO BE #10 "AWG FLEX".

REFER TO UP STANDARD DWG FOR BUNGALOW GROUNDING.

PORTABLE GENERATOR EXTENSION CORD FOR 240V TO 240V IS PROVIDED AS WELL AS A 120V TO 240V ADAPTER.

ALL LIGHTS TO BE 12" ROUNDELS.

= = = = = = 4" X 120' CONDUIT

LIGHTS: LED LIGHTS

GATE A: 22' GATE E: 9'
GATE B: 22' GATE F: 9'
GATE C: 22' GATE G: 9'
GATE D: 22' GATE H: 9'

xx = BELL

CONSTRUCTION NOTE:

1. CABIN LOCATION NEEDS TO BE VERIFIED BY ICC PERSONNEL.
2. WHEN PLACING THE HOUSE THE 10' OR LONG SIDE OF THE HOUSE NEEDS TO BE PARALLEL WITH THE TRACKS.
3. ADD EXTENSION ARMS TO THE FLASHERS ALLOWING CLEARANCE FOR THE GATE ARM WHEN IN THE VERTICAL POSITION.

EXIT GATE MANAGEMENT SYSTEM (EGMS) LOOP LOCATION:

1.) 12" FROM CONCRETE CROSSING PANEL. MAY VARY FROM 6" TO 12" DEPENDING ON PAVEMENT QUALITY.
2.) 2' FROM CROSSING CENTERLINE.
3.) 3.5' FROM GATE ARM.
4.) 2' FROM THE EDGE OF THE TRAVELED WAY. MAY BE INCREASED UP TO A MAXIMUM OF 5' WHERE AN IMPROVED SHOULDER OR OTHER EXISTS.
5.) MAXIMUM LOOP WIDTH NOT TO EXCEED 8' AND MINIMUM WIDTH TYPICALLY NOT TO BE LESS THAN 5'. LOOPS BETWEEN TRACKS MUST NOT BE LESS THAN 3'. HOWEVER SMALLER LOOPS ARE ACCEPTABLE.
6.) DISTANCE BETWEEN ADJACENT LOOPS FOR ONE DIRECTION OF TRAFFIC MUST NOT EXCEED 13'.
7.) MAXIMUM LOOP AREA NOT TO EXCEED 144 SQUARE FEET.
8.) MAXIMUM LENGTH OF THE LONGEST SIDE OF A LOOP SHALL NOT EXCEED 28'6".

— — = EGMS LOOP

W(S) ←—○—→ E(N)

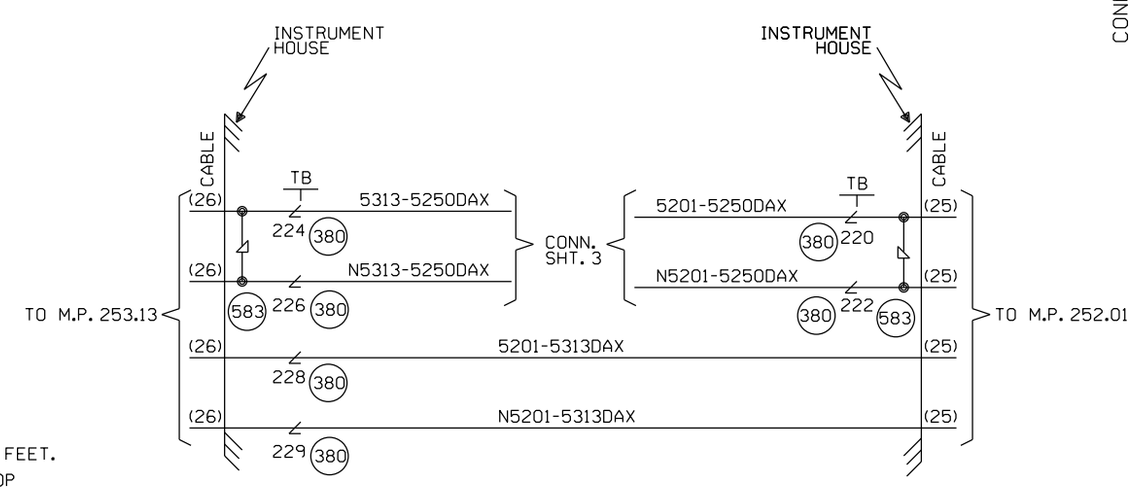

CABLE TABULATION

CABLE #25 7C #14 U.G.B.T. HOUSE TO M.P. 252.01
CABLE #26 7C #14 U.G.B.T. HOUSE TO M.P. 253.13

NEW SHEET

					Designed: 09/27/12 TIER IS PHASE 1 M.P. 239.70 TO M.P. 255.35 TO UPGRADE XING TO 4 QUAD WITH EGMS, VARIOUS C.P.'S. Rec*: WO*: 10804 IS: NBT / / NST/MJF	MODIFICATION LEVEL		CIRCUIT MODIFICATIONS ARE NOT TO BE MADE WITHOUT AUTHORITY FROM THE OFFICE OF SIGNAL DESIGN	Date: 09/27/12	UNION PACIFIC RAILROAD	Sh.: 1
						O.A. LAST LEVEL CHECKED	DU		Des: NST	GODFREY, ILLINOIS TOLLE STREET SPRINGFIELD SUBDIVISION	DOT 294429C
						LAST LEVEL MOD THIS TYPICAL	DU		Chk: NBT		MP: 252.50
						LAST LEVEL BY DESIGNER	DU		AFE: 10804		ID: CSL25250.1X
						CHANGED FROM TYPICAL?	Y				
						REV 01.24.11 4K 2TKEGMS.1				Office of AVP Engineering - Signal Omaha, Nebraska	

The Incremental Train Control System (ITCS) provides advance activation of the crossings for all ITCS equipped trains travleing over 20 M.P.H. The ITCS is a communication-based train control system that provides enforcement and advanced start of public crossings. ITCS vitally monitors the existing crossings as a basis for determining permissible action and uses a radio frequency (RF) data link with a vital communication protocol to send wayside status to the trains. Enforcement of speed limits is performed vitally by an onboard computer (OBC). The wayside components monitor Crossing Warning Systems and relay the information to the train over the RF network as a list of device statuses. The OBC interprets the statuses and enforces all speed limits and braking based upon those statuses. The OBC must receive an acknowledgment from the crossing, verifying the proper operation of the Crossing Warning System, before the train can proceed at high speed through the crossings aprroach circuit. This is the High Speed OK (HSOK) status. If this status is not true, a 79 M.P.H. target speed limit is placed at the start of the conventional track circuit based approach of the crossing.
Conditions that would cause this to happen are:

- The Advance Start Enable test switch is open.
- The Crossing has been activated longer than 3.5 minutes but less than 5 minutes, without a train present on the crossing.
- The loss of communitations longer than 2 minutes 30 seconds.

The most restrictive status in the health status. If the health status for the crossing is not true a 15 M.P.H. target speed limit is placed at the leading island wires of the crossing.
Conditions that would cause this to happen are:

- Activation failure detected. (No vertical gate contact indicating de-energized within 10 seconds of request for crossing to activate)

  If this failure has occurred it requires the advance start enable test switch to be opened to reset the box before any further High Speed operation is allowed.
- The crossing has been activated longer than 5 minutes, without a train present on the crossing.
- The vehicle detector does not indicate clear, or the Gate Down circuit not energized within 20 seconds (Field adjustable) of crossing being requested to activate.
- The vehicle detector health not true. This input consists of the detector loop health, EGMS health, Battery health, and Long Term Occupancy of Vehicle Detector Loop (Greater than 1 minute.)

NEW SHEET

							Designed: 09/27/12 TIER IS PHASE 1 M.P. 239.70 TO M.P. 255.35 TO UPGRADE XING TO 4 QUAD WITH EGMS, VARIOUS C.P.'S Rec#: WO#: 10804 IS: NBT / /NST/MJF	CIRCUIT MODIFICATIONS ARE NOT TO BE MADE WITHOUT AUTHORITY FROM THE OFFICE OF SIGNAL DESIGN	Date: 09/27/12 Des: NST Chk: NBT AFE: 10804	UNION PACIFIC RAILROAD GODFREY, ILLINOIS TOLLE STREET SPRINGFIELD SUBDIVISION Office of AVP Engineering - Signal Omaha, Nebraska	Sh.: 1A DOT 294429C MP: 252.50 ID: CSL25250.1AX

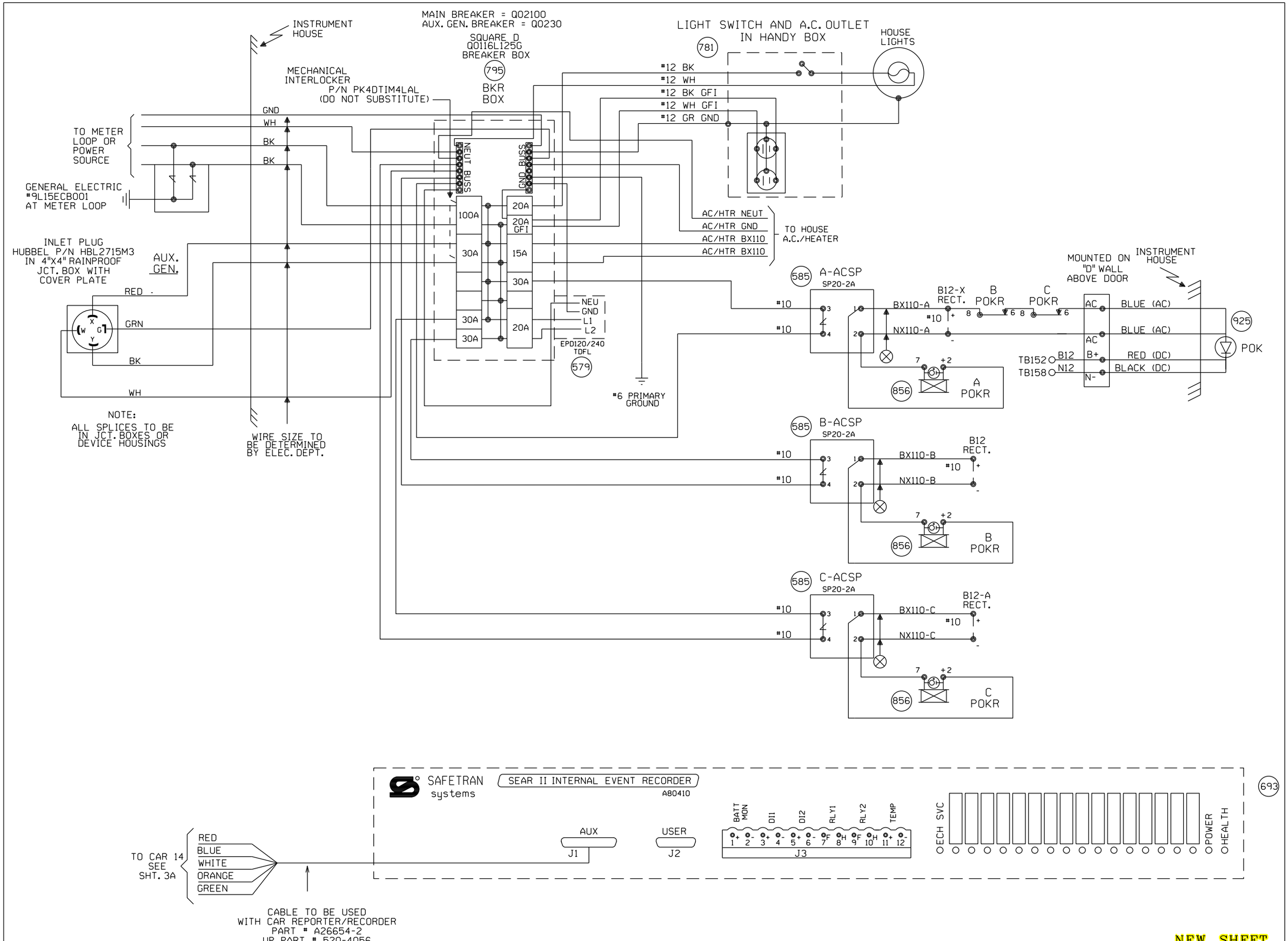

NEW SHEET

					Designed: 09/27/12 TIER IS PHASE 1 M.P. 239.70 TO M.P. 255.35 TO UPGRADE XING TO 4 QUAD WITH EGMS, VARIOUS C.P.'S Rec#: WO#: 10804 IS: NBT / / NST/MJF	MODIFICATION LEVEL		CIRCUIT MODIFICATIONS ARE NOT TO BE MADE WITHOUT AUTHORITY FROM THE OFFICE OF SIGNAL DESIGN	Date: 09/27/12	UNION PACIFIC RAILROAD	Sh.: 2
						Q.A. LAST LEVEL CHECKED	DU		Des: NST	GODFREY, ILLINOIS	DOT 294429C
						LAST LEVEL MOD THIS TYPICAL	DU		Chk: NBT	TOLLE STREET	MP: 252.50
						LAST LEVEL BY DESIGNER	DU		AFE: 10804	SPRINGFIELD SUBDIVISION	ID: CSL25250.2X
						CHANGED FROM TYPICAL?	Y				
						REV 01.24.11 4K 2TKEGMS.2				Office of AVP Engineering - Signal Omaha, Nebraska	

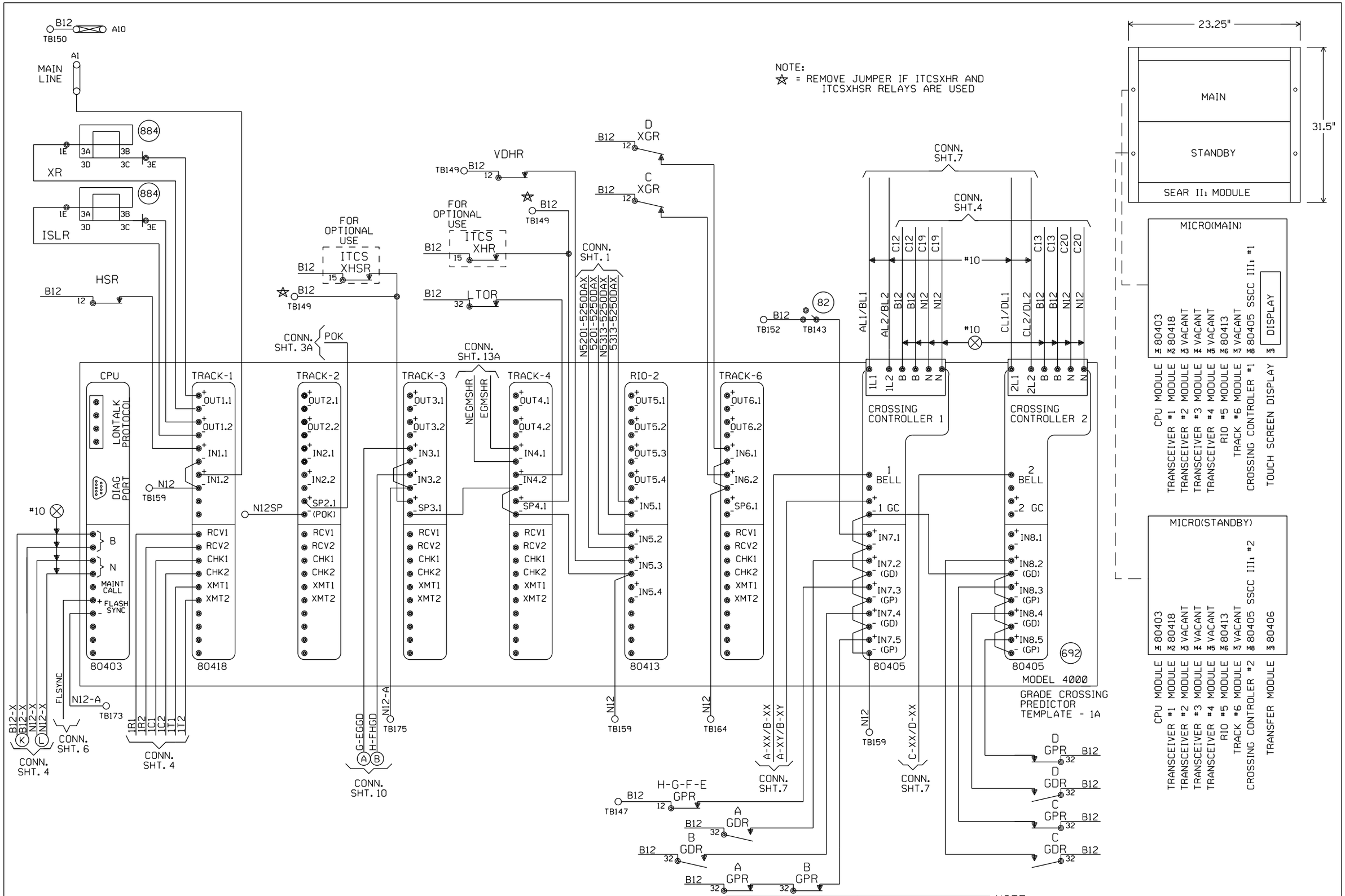

"Mf" FREQUENCY (HZ)	MAXIMUM TRANSMIT WIRE LENGTH (FEET)
86	100
114	125
156	150
211	200
285-970	250

NOTE:
EACH TRANSMITTER TO RAIL WIRE FROM XMT1 AND XMT2 MUST NOT EXCEED THE MAXIMUM LENGTH SPECIFIED IN THE TABLE SHOWN. THE RECEIVER WIRE LENGTH IS NOT CRITICAL. DOES NOT APPLY TO 6 TRACK WIRE APPLICATION.

NEW SHEET

Designed: 09/27/12

TIER IS PHASE 1 M.P. 239.70 TO M.P. 255.35 TO UPGRADE XING TO 4 QUAD WITH EGMS, VARIOUS C.P.'S

Rec*: WO*: 10804
IS: NBT / / NST/MJF

MODIFICATION LEVEL	
O. A. LAST LEVEL CHECKED	DU
LAST LEVEL MOD THIS TYPICAL	DU
LAST LEVEL BY DESIGNER	DU
CHANGED FROM TYPICAL?	Y

REV 01.24.11 4K 2TKEGMS.3

CIRCUIT MODIFICATIONS ARE NOT TO BE MADE WITHOUT AUTHORITY FROM THE OFFICE OF SIGNAL DESIGN

Date: 09/27/12
Des: NST
Chk: NBT
AFE: 10804

UNION PACIFIC RAILROAD

GODFREY, ILLINOIS
TOLLE STREET
SPRINGFIELD SUBDIVISION

Office of AVP Engineering - Signal — Omaha, Nebraska

Sh.: 3
DOT 294429C
MP: 252.50
ID: CSL25250.3X

Minimum Program Steps Report

Location and SIN

DOT Number: 294429C
Milepost Number: 252.50
Site Name: GODFREY, IL

SIN: 762010010016 *

* Parameter is part of office check number calculation.

MCF and Template Selection

MCF Name: GCP-T6X-02-6.mcf
MCF Revision: 26
MCFCRC: 494D2656

Template = 1A:6 Trk Bi (OCCN) *

* Parameter is part of office check number calculation.

Minimum Program Steps

MS4000 configuration
Track 1 : GCP Frequency = 285 Hz (OCCN,TCN) (Hidden) *
Track 1 : Prime UAX = IP (OCCN) (Hidden) *
Track 1 : Prime UAX Pickup = 15 sec (OCCN) (Hidden) *
Track 1 : Isl Frequency = 4.9 kHz (OCCN) (Hidden) *
Track 1 : Pickup Delay (2s +) = 2 sec (OCCN) (Hidden) *
IN 1.1 = AND 1 XR Enable (OCCN) (Hidden) *
IN 1.2 = Out Of Service IP 1 (OCCN) (Hidden) *

MS4000 Predictor
Track 1 : Prime Warning Time = 37 sec (OCCN) (Hidden) *

BASIC: module configuration
Track 5/RIO 2 Slot = RIO (OCCN) *

GCP: track 1
Track 1 : GCP Frequency = 285 Hz (OCCN,TCN) *
Track 1 : Approach Distance = 3276 ft (OCCN,TCN) *
Track 1 : Island Distance = 176 ft (Set in Field,TCN)

GCP: track 1 prime
Track 1 : Prime Warning Time = 37 sec (OCCN) *
Track 1 : Prime UAX = IP (OCCN) *
Track 1 : Prime UAX Pickup = 15 sec (OCCN) *

ISLAND: track 1
Track 1 : Isl Frequency = 4.9 kHz (OCCN) *
Track 1 : Pickup Delay (2s +) = 2 sec (OCCN) *

AND: AND 1 XR
AND 1 Enable Used = Yes (OCCN) *

ADVANCED: out of service
OOS Control = OOS IPs (OCCN) *

SSCC: 2
SSCC-2 Number of GPs = 2 (OCCN) *
SSCC-2 Number of GDs = 2 (OCCN) *

```
OUTPUT:  assignment page 1
OUT 1.1 = AND 1 XR (OCCN) *
OUT 1.2 = T1 Island (OCCN) *

INPUT:  assignment page 1
IN 1.1 = AND 1 XR Enable (OCCN) *
IN 1.2 = Out Of Service IP 1 (OCCN) *

INPUT:  assignment page 2
IN 5.1 = T1 Prime UAX (OCCN) *
IN 5.2 = T1 Prime UAX (OCCN) *
IN 5.3 = GP 1.1 (OCCN) *

IO:  assignment SSCC
IN 7.1 = AND 1 XR Enable (OCCN) *
IN 7.2 = GD 1.1 (OCCN) *
IN 7.4 = GD 1.2 (OCCN) *
IN 8.2 = GD 2.1 (OCCN) *
IN 8.3 = GP 2.1 (OCCN) *
IN 8.4 = GD 2.2 (OCCN) *
IN 8.5 = GP 2.2 (OCCN) *

SEAR:  inputs
SP 3.1 = General 3 (OCCN) *
SP 4.1 = General 4 (OCCN) *

SEAR:  slot 1-4 inputs
IN 3.1 = General 1 (OCCN) *
IN 3.2 = General 2 (OCCN) *
IN 4.1 = Vehicle Det Hlth (OCCN) *
IN 4.2 = 3 Vehicle Detect (OCCN) *

SEAR:  inputs slot 6
IN 6.1 = General 1 (OCCN) *
IN 6.2 = General 2 (OCCN) *

SEAR:  slot 7-8 inputs
IN 7.3 = General 3 (OCCN) *

Express: MS4000 configuration
Track 1 : GCP Frequency = 285 Hz (OCCN,TCN) (Hidden) *
Track 1 : Prime UAX = IP (OCCN) (Hidden) *
Track 1 : Prime UAX Pickup = 15 sec (OCCN) (Hidden) *
Track 1 : Pickup Delay (2s +) = 2 sec (OCCN) (Hidden) *
IN 1.1 = AND 1 XR Enable (OCCN) (Hidden) *
IN 1.2 = Out Of Service IP 1 (OCCN) (Hidden) *

Express: MS4000 Predictor
Track 1 : Prime Warning Time = 37 sec (OCCN) (Hidden) *

* Parameter is part of office check number calculation.

Check Numbers
-------------
Office Check Number: 4B85BB0D
Config. Check Number: 58593A9A
(Based on MCF Revision 26)

Parameters not part of office check number calculation:

Track 1 : Island Distance = 176 ft (Set in Field)
```

Comments

INPUT 3.1 ASSIGNED TO GENERAL 1 FOR "E" AND "G" PED GATE GD.
INPUT 3.2 ASSIGNED TO GENERAL 2 FOR "F" AND "H" PED GATE GD.
INPUT 7.3 ASSIGNED TO GENERAL 3 FOR PED GATE GP.

Configuration Package File

Filename: CSL25250_294429C.pac
Path: H:\UP\Springfield Sub Tier 1 Ph. 1 11-419-1\PAC Files\MP 252.50\
Date/Time: 1/07/2016 13:29:10
DT Version: 5.7.3

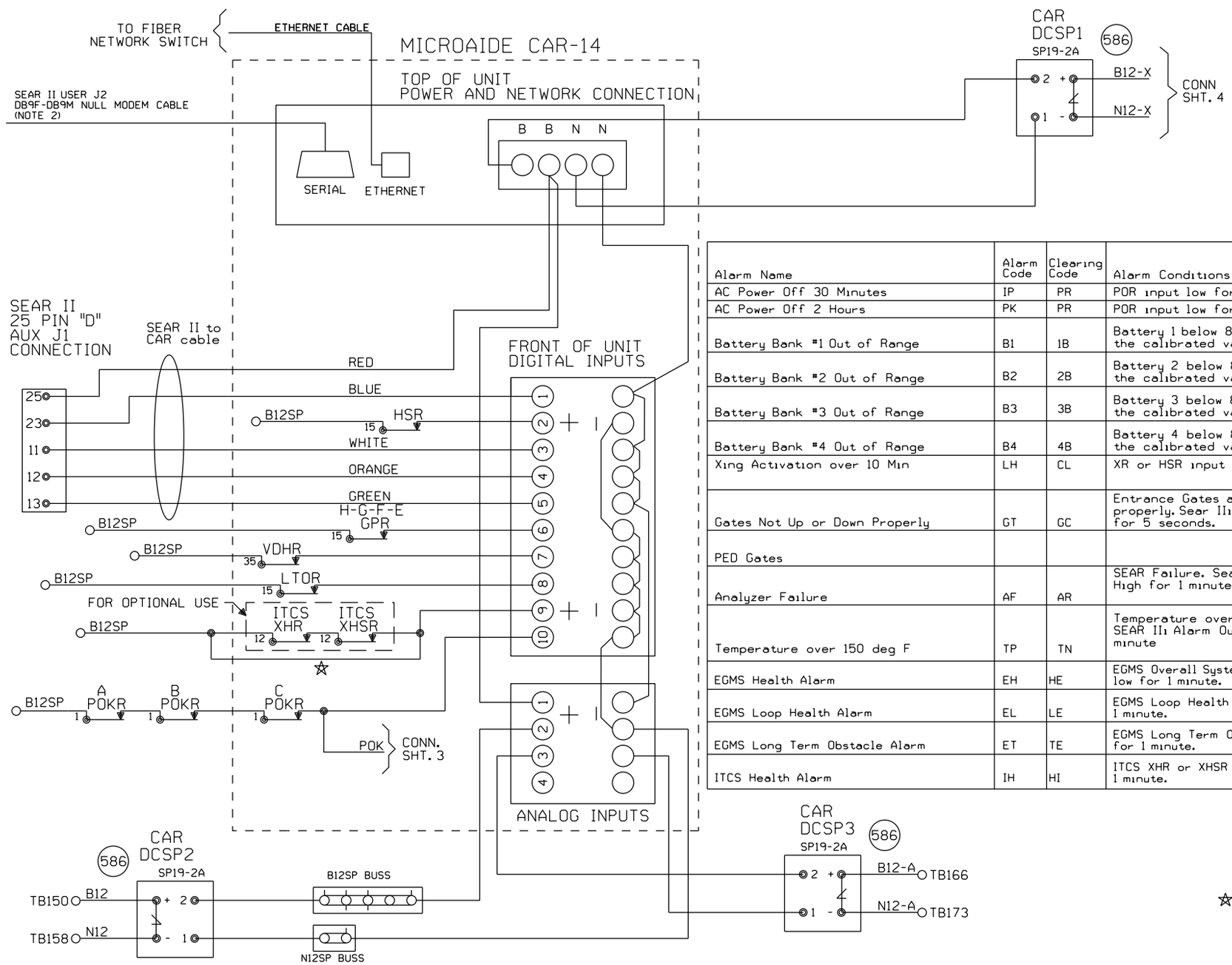

NOTE:
1) DO NOT JUMPER UNUSED INPUTS
2) THE CAR14 SERIAL PORT IS AVAILABLE TO ADD REMOTE CONNECTIVITY TO EXISTING LOGGING EQUIPMENT. USE NULL MODEM CABLE WITH SHIELDING DISCONNECTED AT ONE OR BOTH SIDES.

ANALOG INPUTS:
A1) B12X BATTERY BANK
A2) B12 BATTERY BANK
A3) B12-A BATTERY BANK
A4) BATTERY BANK 4

DIGITAL INPUTS
D1) XR (BLUE WIRE)
D2) HSR
D3) ANALYZER FAILURE (WHITE WIRE)
D4) HIGH TEMPERATURE (ORANGE WIRE)
D5) GATES NOT UP OR DOWN PROPERLY (GREEN WIRE)
D6) PED GATE UP INDICATION
D7) VDHR - EGMS LOOP HEALTH
D8) LTOR - EGMS LONG-TERM OBSTACLE
D9) ITCS HEALTH (JUMPER TO B12SP IF UNUSED)
D10) POWER OFF INDICATION

CONFIG: C14HISPEED

Alarm Name	Alarm Code	Clearing Code	Alarm Conditions	Alarm Clearing Conditions	Cleared by Maintainer Mode?
AC Power Off 30 Minutes	IP	PR	POR input low for 30 minutes.	POR input high for 5 minutes.	No
AC Power Off 2 Hours	PK	PR	POR input low for 2 Hours.	POR input high for 5 minutes.	No
Battery Bank #1 Out of Range	B1	1B	Battery 1 below 81% or above 120% of the calibrated value for 5 minutes.	Battery 1 within acceptable range for 5 minutes.	No
Battery Bank #2 Out of Range	B2	2B	Battery 2 below 81% or above 120% of the calibrated value for 5 minutes.	Battery 2 within acceptable range for 5 minutes.	No
Battery Bank #3 Out of Range	B3	3B	Battery 3 below 81% or above 120% of the calibrated value for 5 minutes.	Battery 3 within acceptable range for 5 minutes.	No
Battery Bank #4 Out of Range	B4	4B	Battery 4 below 81% or above 120% of the calibrated value for 5 minutes.	Battery 4 within acceptable range for 5 minutes.	No
Xing Activation over 10 Min	LH	CL	XR or HSR input low for 10 minutes.	XR and HSR input high for 10 seconds.	Yes
Gates Not Up or Down Properly	GT	GC	Entrance Gates are not up or down properly. Sear II1 Alarm output high for 5 seconds.	Entrance Gates are up or down properly. Sear II1 Alarm output low for 5 seconds.	No
PED Gates					
Analyzer Failure	AF	AR	SEAR Failure. SearII1 Alarm Output High for 1 minute	SearrIII has recovered after an analyzer failure alarm. Sear II1 Alarm Output low for 5 seconds	No
Temperature over 150 deg F	TP	TN	Temperature over 150 degrees F. SEAR II1 Alarm Output high for 1 minute	Termperature has reduced after a High-Temp alarm. SEARII1 Alarm Output low for 5 seconds	No
EGMS Health Alarm	EH	HE	EGMS Overall System Health alarm low for 1 minute.	EGMS Overall System Health alarm high for 5 seconds.	No
EGMS Loop Health Alarm	EL	LE	EGMS Loop Health alarm low for 1 minute.	EGMS Loop Health alarm high for 5 seconds.	No
EGMS Long Term Obstacle Alarm	ET	TE	EGMS Long Term Obstacle alarm low for 1 minute.	EGMS Long Term Obstacle alarm high for 5 seconds.	No
ITCS Health Alarm	IH	HI	ITCS XHR or XHSR output low for 1 minute.	ITCS XHR output high for 5 seconds.	No

☆ = REMOVE JUMPER IF ITCSXHR AND ITCSXHSR RELAYS ARE USED.

NEW SHEET

Designed: 09/27/12
TIER 1S PHASE 1 M.P. 239.70 TO M.P. 255.35 TO UPGRADE XING TO 4 QUAD WITH EGMS, VARIOUS C.P.'S
Rec*: WO*: 10804
1S: NBT / / /NST/MJF

MODIFICATION LEVEL	
O. A. LAST LEVEL CHECKED	DU
LAST LEVEL MOD THIS TYPICAL	DU
LAST LEVEL BY DESIGNER	DU
CHANGED FROM TYPICAL?	Y

REV 01.24.11 4K ACDCCAR14SII.3

CIRCUIT MODIFICATIONS ARE NOT TO BE MADE WITHOUT AUTHORITY FROM THE OFFICE OF SIGNAL DESIGN

Date: 09/27/12
Des: NST
Chk: NBT
AFE: 10804

UNION PACIFIC RAILROAD
GODFREY, ILLINOIS
TOLLE STREET
SPRINGFIELD SUBDIVISION
Office of AVP Engineering - Signal Omaha, Nebraska

Sh.: 3A
DOT 294429C
MP: 252.50
ID: CSL25250.3AX

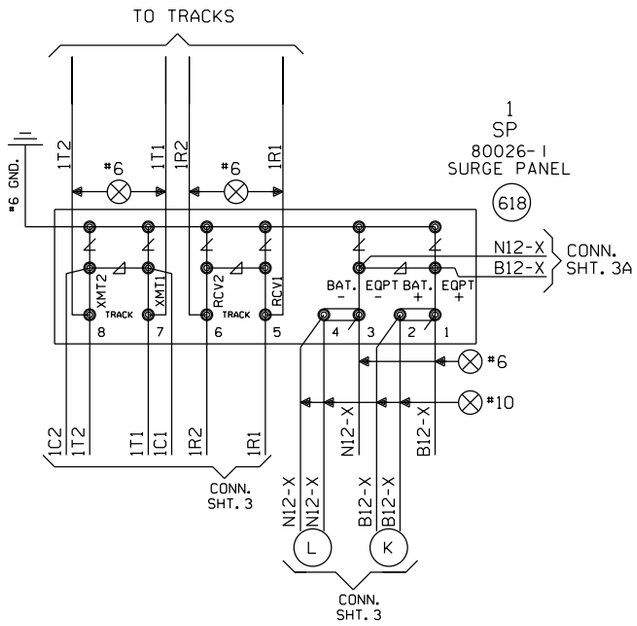

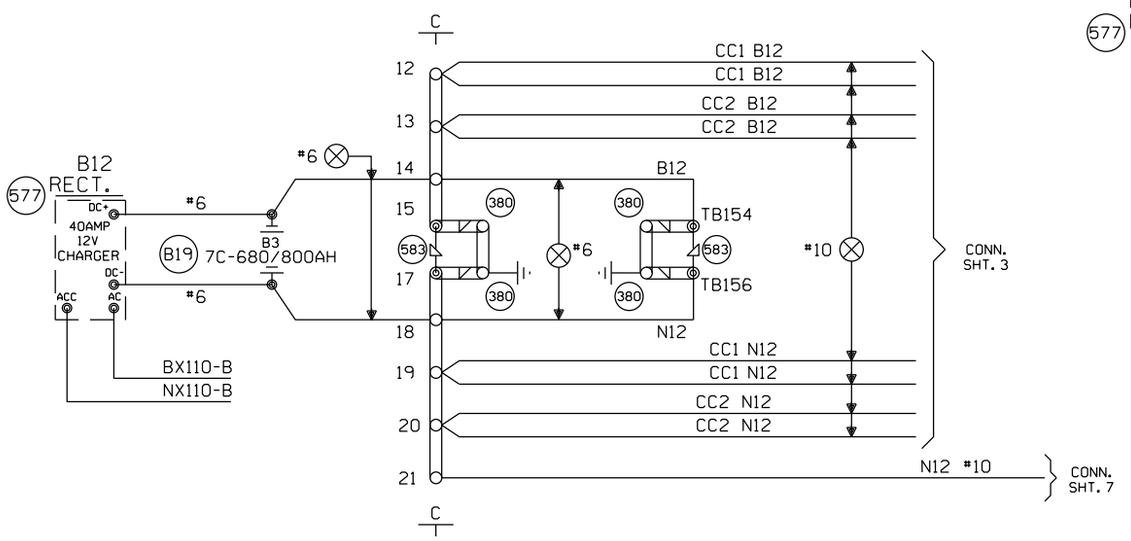

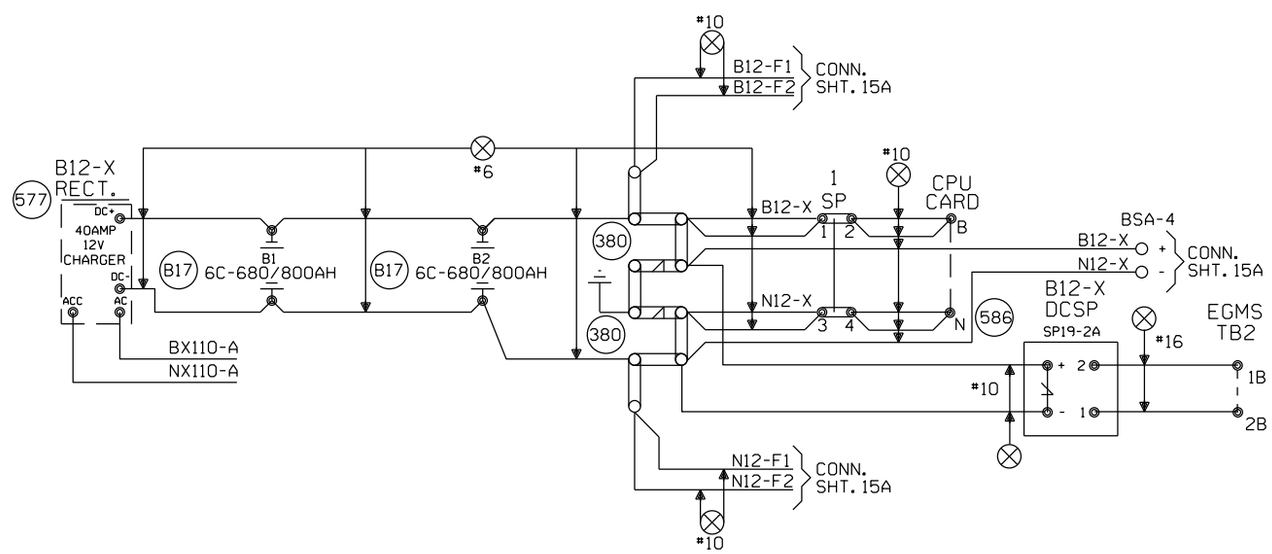

NEW SHEET

					Designed: 09/27/12 TIER 1S PHASE 1 M.P. 239.70 TO M.P. 255.35 TO UPGRADE XING TO 4 QUAD WITH EGMS, VARIOUS C.P.'S Rec#: WO#: 10804 IS: NBT/ /NST/MJF	MODIFICATION LEVEL O. A. LAST LEVEL CHECKED DU LAST LEVEL MOD THIS TYPICAL DU LAST LEVEL BY DESIGNER DU CHANGED FROM TYPICAL? Y REV 01.24.11 4K 2TKEGMS.4	CIRCUIT MODIFICATIONS ARE NOT TO BE MADE WITHOUT AUTHORITY FROM THE OFFICE OF SIGNAL DESIGN	Date: 09/27/12 Des: NST Chk: NBT AFE: 10804	UNION PACIFIC RAILROAD GODFREY, ILLINOIS TOLLE STREET SPRINGFIELD SUBDIVISION Office of AVP Engineering - Signal Omaha, Nebraska	Sh.: 4 DOT 294429C MP: 252.50 ID: CSL25250.4X

LEFT

775

TOP

VOLTAGE MONITOR 520603-2V150A

RAILWAY EQUIPMENT CO.
MPLS, MN 763-972-2200

PASSWORD			The Password to adjust parameters is 5.
MAX VCH1	SET	---- . ---	High voltage setpoint for channel one.
LOW VCH1	SET	---- . ---	Low voltage setpoint for channel one.
DELAY CH1	SET	---------	Delay time in sec. before a fault is set for ch. one.
MAX VCH2	SET	---- . ---	High voltage setpoint for channel two.
LOW VCH2	SET	---- . ---	Low voltage setpoint for channel Two.
HIGH AMP	SET	---------	High current setpoint for channel two.
LOW AMP	SET	---------	Low current setpoint for channel two.
HIGH TEMP	SET	---------	High temp. setpoint for channel two.
LOW TEMP	SET	---------	Low temp. setpoint for channel two.
DELAY CH2	SET	---------	Delay time in sec. before a fault is set for ch. two.

MENU OPERATION: Depressing the MODE button will move through all screens. Depressing the INCREASE or DECREASE button will increase or decrease the desired value

LOW VOLTAGE SETPOINT IS TO BE SET AT 11 VOLTS.

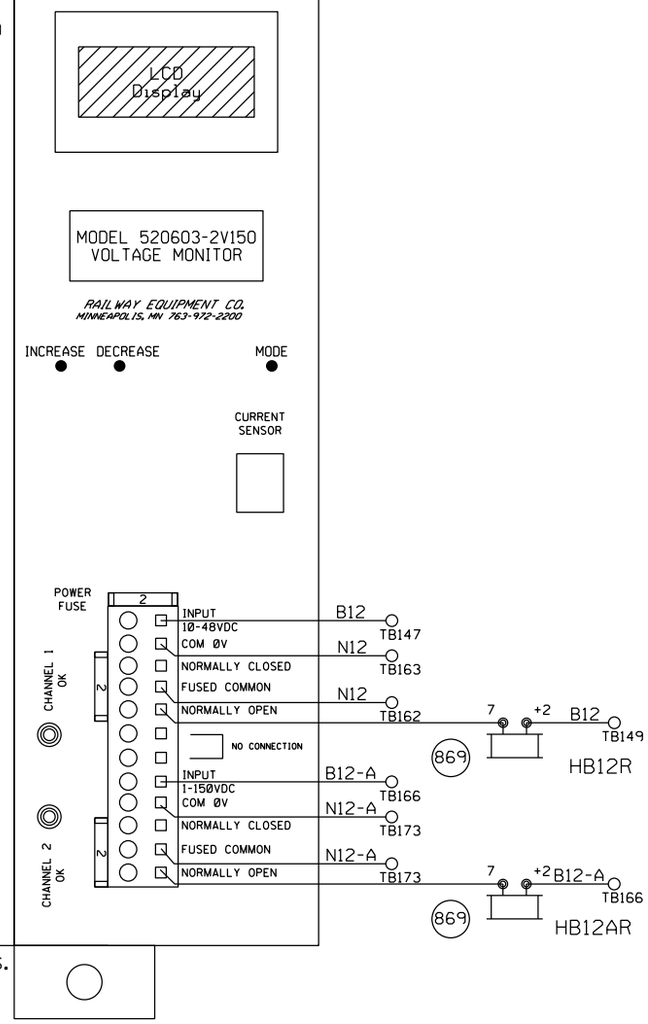

NEW SHEET

							Designed: 09/27/12 TIER IS PHASE 1 M.P. 239.70 TO M.P. 255.35 TO UPGRADE XING TO 4 QUAD WITH EGMS, VARIOUS C.P.'S Rec*: WO*: 10804 IS: NBT / / / NST/MJF	CIRCUIT MODIFICATIONS ARE NOT TO BE MADE WITHOUT AUTHORITY FROM THE OFFICE OF SIGNAL DESIGN	Date: 09/27/12 Des: NST Chk: NBT AFE: 10804	UNION PACIFIC RAILROAD GODFREY, ILLINOIS TOLLE STREET SPRINGFIELD SUBDIVISION Office of AVP Engineering - Signal Omaha, Nebraska	Sh.: 5 DOT 294429C MP: 252.50 ID: CSL25250.5X

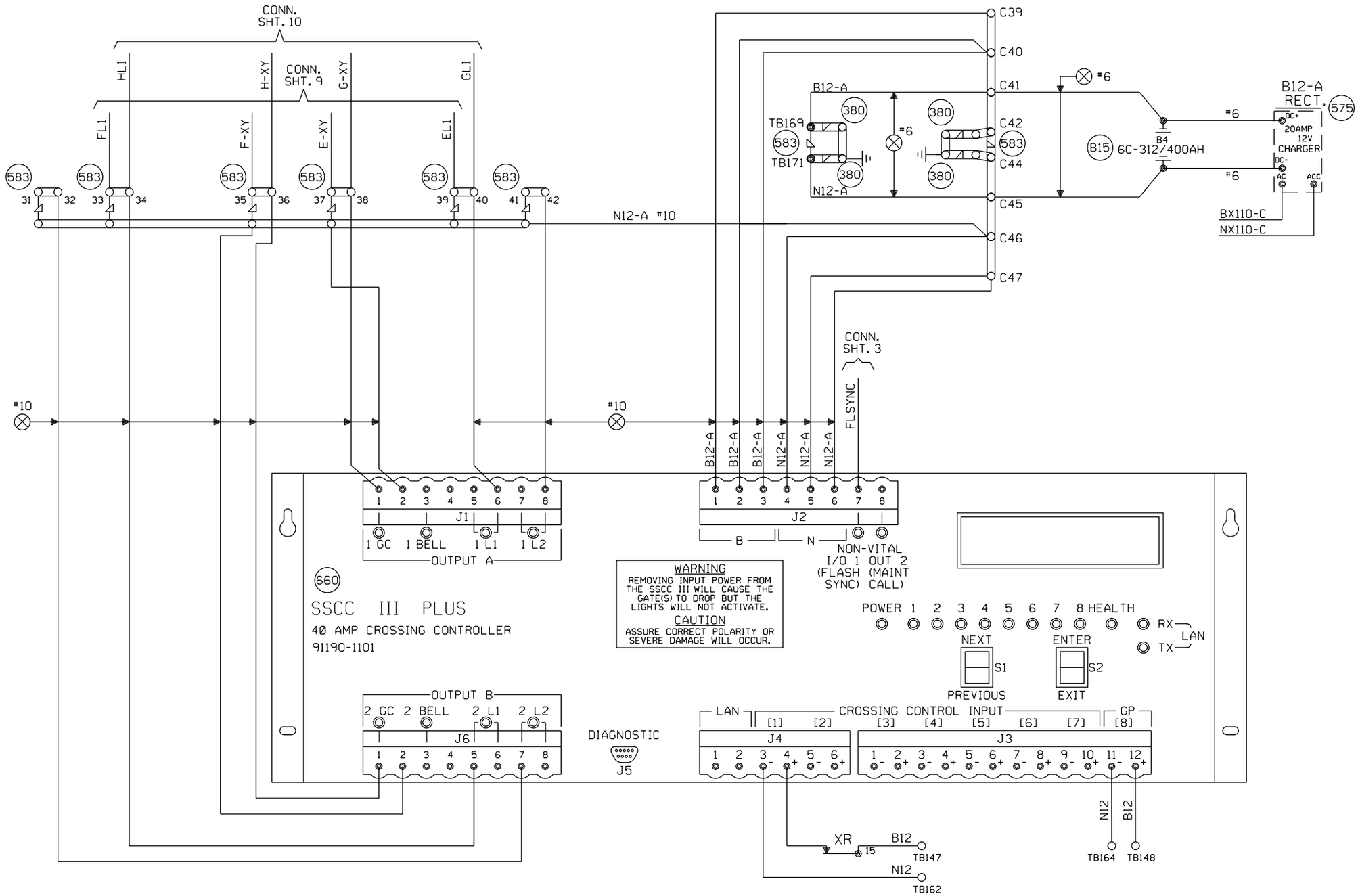

IMPORTANT

THE PROGRAM MCF AND ID LISTED BELOW MUST BE ENTERED IN THE PROGRAM SETUP ROUTINE FOR THIS SOLID STATE CROSSING CONTROLLER TO FUNCTION PROPERLY.

PROGRAM MCF: BASICPLS

PROGRAM ID: 087

NEW SHEET

Designed: 09/27/12

TIER IS PHASE 1 M.P. 239.70 TO M.P. 255.35 TO UPGRADE XING TO 4 QUAD WITH EGMS, VARIOUS C.P.'S

Rec*: WO*: 10804

IS: NBT / / NST/MJF

MODIFICATION LEVEL	
Q.A. LAST LEVEL CHK'D.	DH
LAST LEVEL MOD. THIS TYP.	DH
LAST LEVEL BY DESIGNER.	DU
CHANGED FROM TYP.? Y/N	Y

CIRCUIT MODIFICATIONS ARE NOT TO BE MADE WITHOUT AUTHORITY FROM THE OFFICE OF SIGNAL DESIGN

Date: 09/27/12
Des: NST
Chk: NBT
AFE: 10804

UNION PACIFIC RAILROAD
GODFREY, ILLINOIS
TOLLE STREET
SPRINGFIELD SUBDIVISION
Office of AVP Engineering - Signal Omaha, Nebraska

Sh.: 6
DOT 294429C
MP: 252.50
ID: CSL25250.6X

(REV. 01.01.04) (SSCC4G.5)

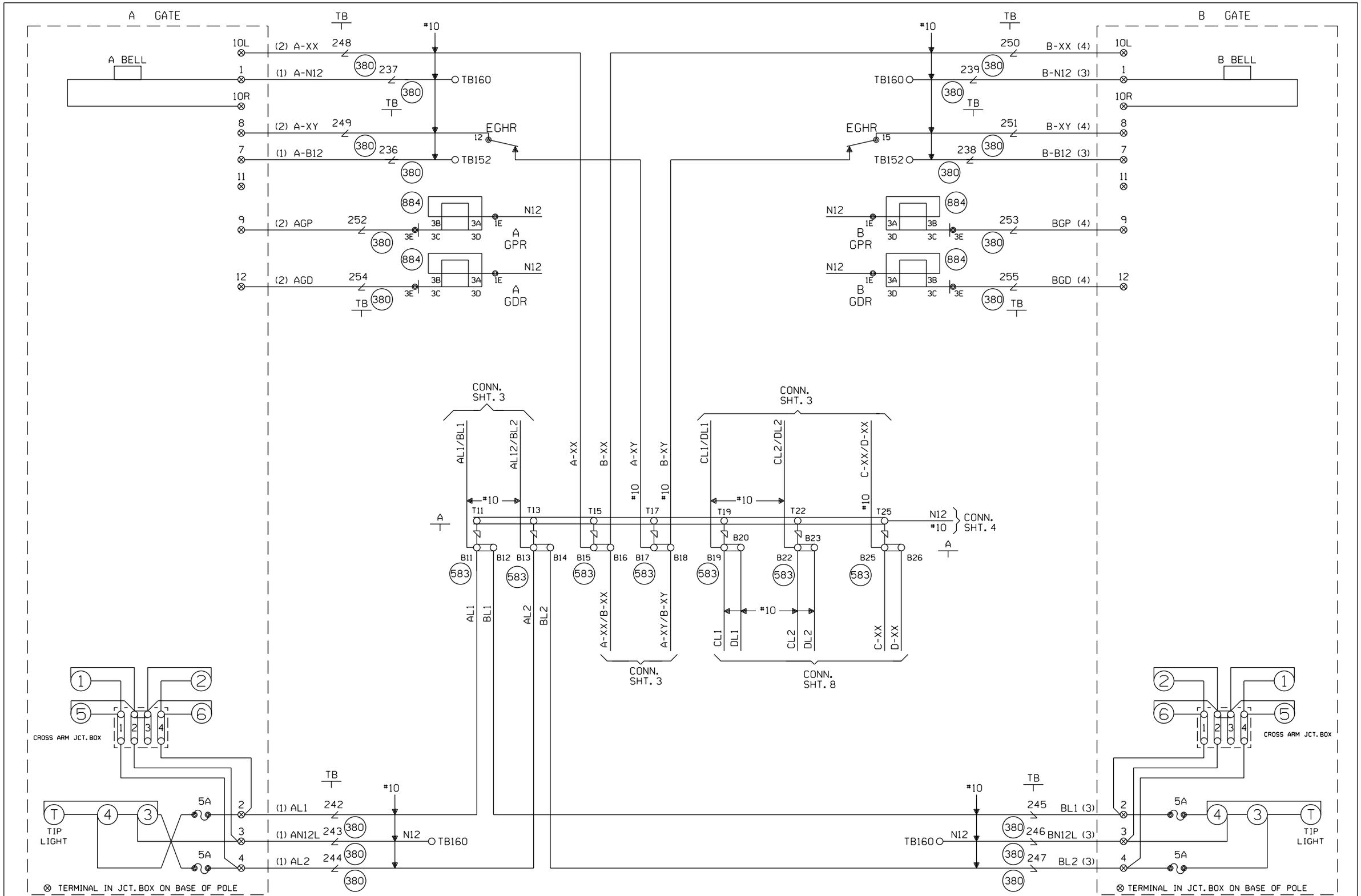

CABLE TABULATION

CABLE NO. 1 5C. NO.6 U.G.B.T.
CABLE NO. 2 7C. NO.14 U.G.B.T.
CABLE NO. 3 5C. NO.6 U.G.B.T.
CABLE NO. 4 7C. NO.14 U.G.B.T.

NEW SHEET

Designed: 09/27/12
TIER IS PHASE 1 M.P. 239.70 TO M.P. 255.35 TO UPGRADE XING TO 4 QUAD WITH EGMS, VARIOUS C.P.'S
Rec*: WO*: 10804
IS: NBT / / NST/MJF

MODIFICATION LEVEL	
O.A. LAST LEVEL CHECKED	DU
LAST LEVEL MOD THIS TYPICAL	DU
LAST LEVEL BY DESIGNER	DU
CHANGED FROM TYPICAL?	Y

REV 01.24.11 4K 2TKEGMS.5

CIRCUIT MODIFICATIONS ARE NOT TO BE MADE WITHOUT AUTHORITY FROM THE OFFICE OF SIGNAL DESIGN

Date: 09/27/12
Des: NST
Chk: NBT
AFE: 10804

UNION PACIFIC RAILROAD
GODFREY, ILLINOIS
TOLLE STREET
SPRINGFIELD SUBDIVISION
Office of AVP Engineering - Signal Omaha, Nebraska

Sh.: 7
DOT 294429C
MP: 252.50
ID: CSL25250.7X

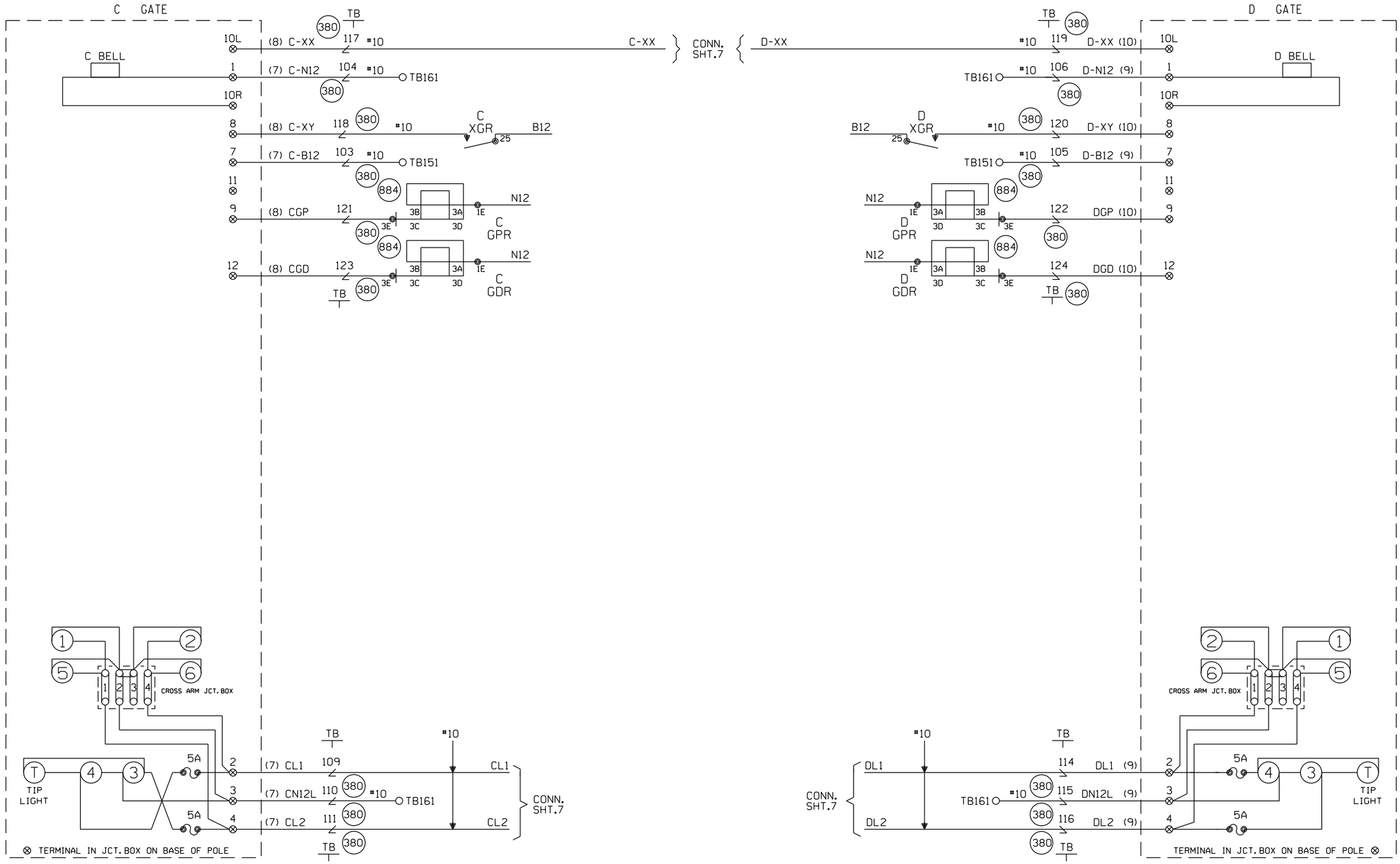

CABLE TABULATION

CABLE NO. 7 5C. NO.6 U.G.B.T.
CABLE NO. 8 7C. NO.14 U.G.B.T.
CABLE NO. 9 5C. NO.6 U.G.B.T.
CABLE NO. 10 7C. NO.14 U.G.B.T.

NEW SHEET

					Designed: 09/27/12 TIER IS PHASE 1 M.P. 239.70 TO M.P. 255.35 TO UPGRADE XING TO 4 QUAD WITH EGMS, VARIOUS C.P.'S Rec*: WO*: 10804 IS: NBT / / NST/MJF	MODIFICATION LEVEL		CIRCUIT MODIFICATIONS ARE NOT TO BE MADE WITHOUT AUTHORITY FROM THE OFFICE OF SIGNAL DESIGN	Date: 09/27/12	UNION PACIFIC RAILROAD	Sh.: 8
						O.A. LAST LEVEL CHECKED	DU		Des: NST	GODFREY, ILLINOIS TOLLE STREET SPRINGFIELD SUBDIVISION	DOT 294429C
						LAST LEVEL MOD THIS TYPICAL	DU		Chk: NBT		MP: 252.50
						LAST LEVEL BY DESIGNER	DU				
						CHANGED FROM TYPICAL?	Y		AFE: 10804	Office of AVP Engineering - Signal Omaha, Nebraska	ID: CSL25250.8X
						REV 01.24.11 4K 2TKEGMS.6					

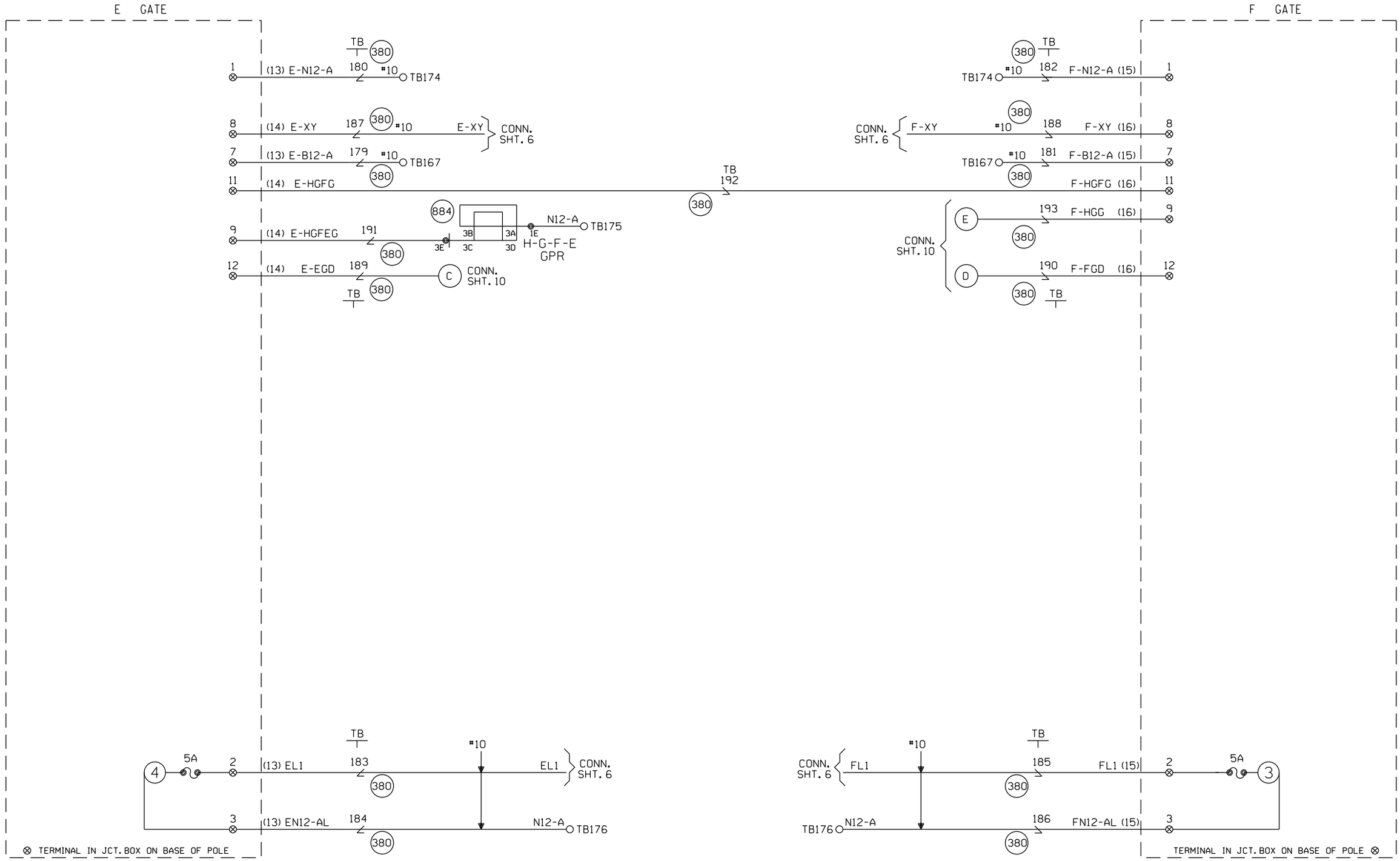

CABLE TABULATION

CABLE NO. 13 5C. NO.6 U.G.B.T. TO GATE E
CABLE NO. 14 7C. NO.14 U.G.B.T. TO GATE E
CABLE NO. 15 5C. NO.6 U.G.B.T. TO GATE F
CABLE NO. 16 7C. NO.14 U.G.B.T. TO GATE F

NEW SHEET

Designed: 09/27/12

TIER IS PHASE 1 M.P. 239.70 TO M.P. 255.35 TO UPGRADE XING TO 4 QUAD WITH EGMS, VARIOUS C.P.'S

Rec*: WO*: 10804
IS: NBT / / NST/MJF

MODIFICATION LEVEL	
O.A. LAST LEVEL CHECKED	DU
LAST LEVEL MOD THIS TYPICAL	DU
LAST LEVEL BY DESIGNER	DU
CHANGED FROM TYPICAL?	Y

REV 01.24.11 4K 4GFTYP.5

CIRCUIT MODIFICATIONS ARE NOT TO BE MADE WITHOUT AUTHORITY FROM THE OFFICE OF SIGNAL DESIGN

Date: 09/27/12
Des: NST
Chk: NBT
AFE: 10804

UNION PACIFIC RAILROAD
GODFREY, ILLINOIS
TOLLE STREET
SPRINGFIELD SUBDIVISION
Office of AVP Engineering - Signal Omaha, Nebraska

Sh.: 9
DOT 294429C
MP: 252.50
ID: CSL25250.9X

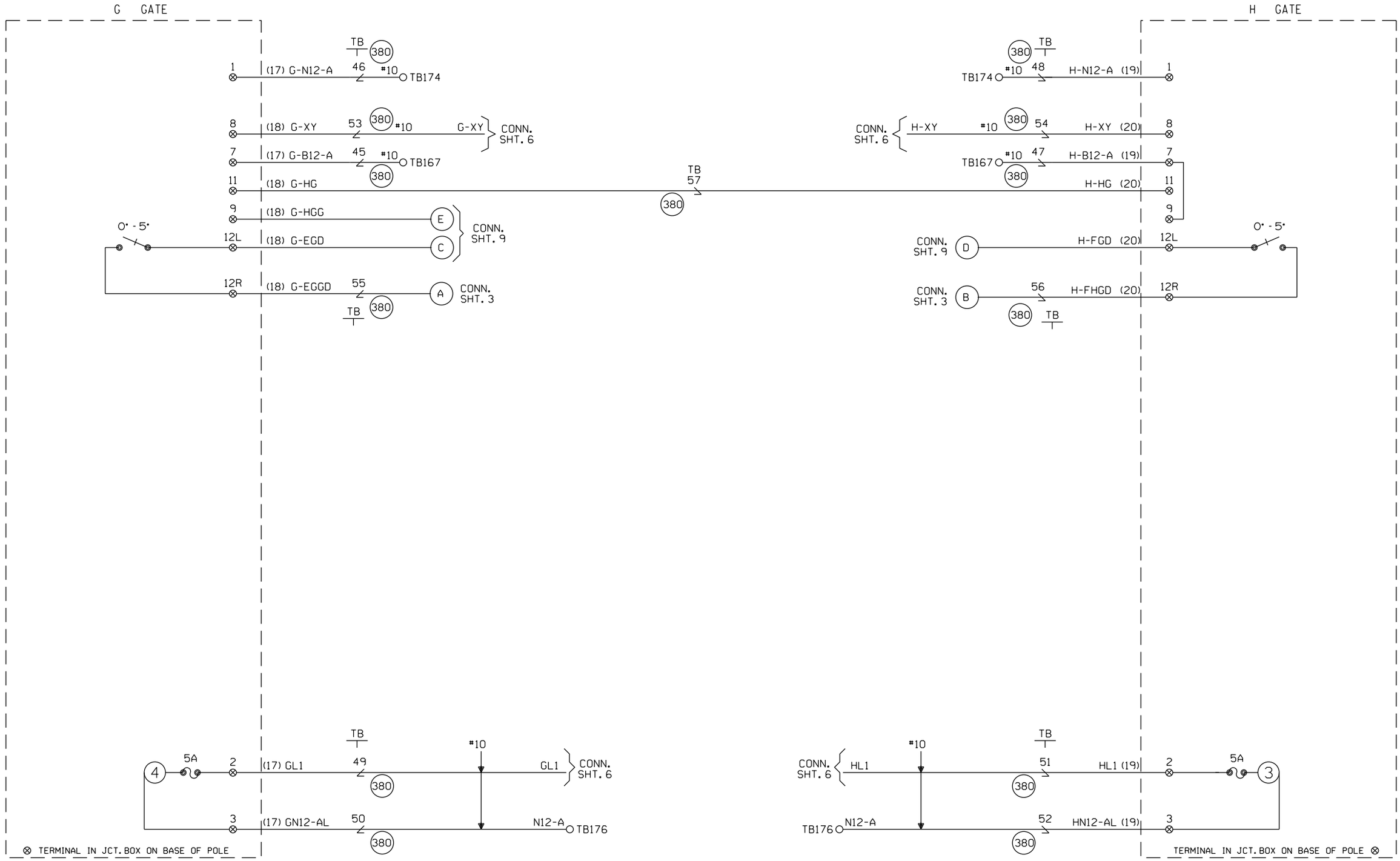

CABLE TABULATION

CABLE NO. 17 5C. NO.6 U.G.B.T. TO GATE G
CABLE NO. 18 7C. NO.14 U.G.B.T. TO GATE G
CABLE NO. 19 5C. NO.6 U.G.B.T. TO GATE H
CABLE NO. 20 7C. NO.14 U.G.B.T. TO GATE H

NEW SHEET

Designed: 09/27/12

TIER IS PHASE 1 M.P. 239.70 TO M.P. 255.35 TO UPGRADE XING TO 4 QUAD WITH EGMS, VARIOUS C.P.'S

Rec*: WO*: 10804
IS: NBT / / NST/MJF

MODIFICATION LEVEL	
O. A. LAST LEVEL CHECKED	DU
LAST LEVEL MOD THIS TYPICAL	DU
LAST LEVEL BY DESIGNER	DU
CHANGED FROM TYPICAL?	Y

REV 01.24.11 4K 4GFTYP.6

CIRCUIT MODIFICATIONS ARE NOT TO BE MADE WITHOUT AUTHORITY FROM THE OFFICE OF SIGNAL DESIGN

Date: 09/27/12
Des: NST
Chk: NBT
AFE: 10804

UNION PACIFIC RAILROAD
GODFREY, ILLINOIS
TOLLE STREET
SPRINGFIELD SUBDIVISION
Office of AVP Engineering - Signal Omaha, Nebraska

Sh.: 10
DOT 294429C
MP: 252.50
ID: CSL25250.10X

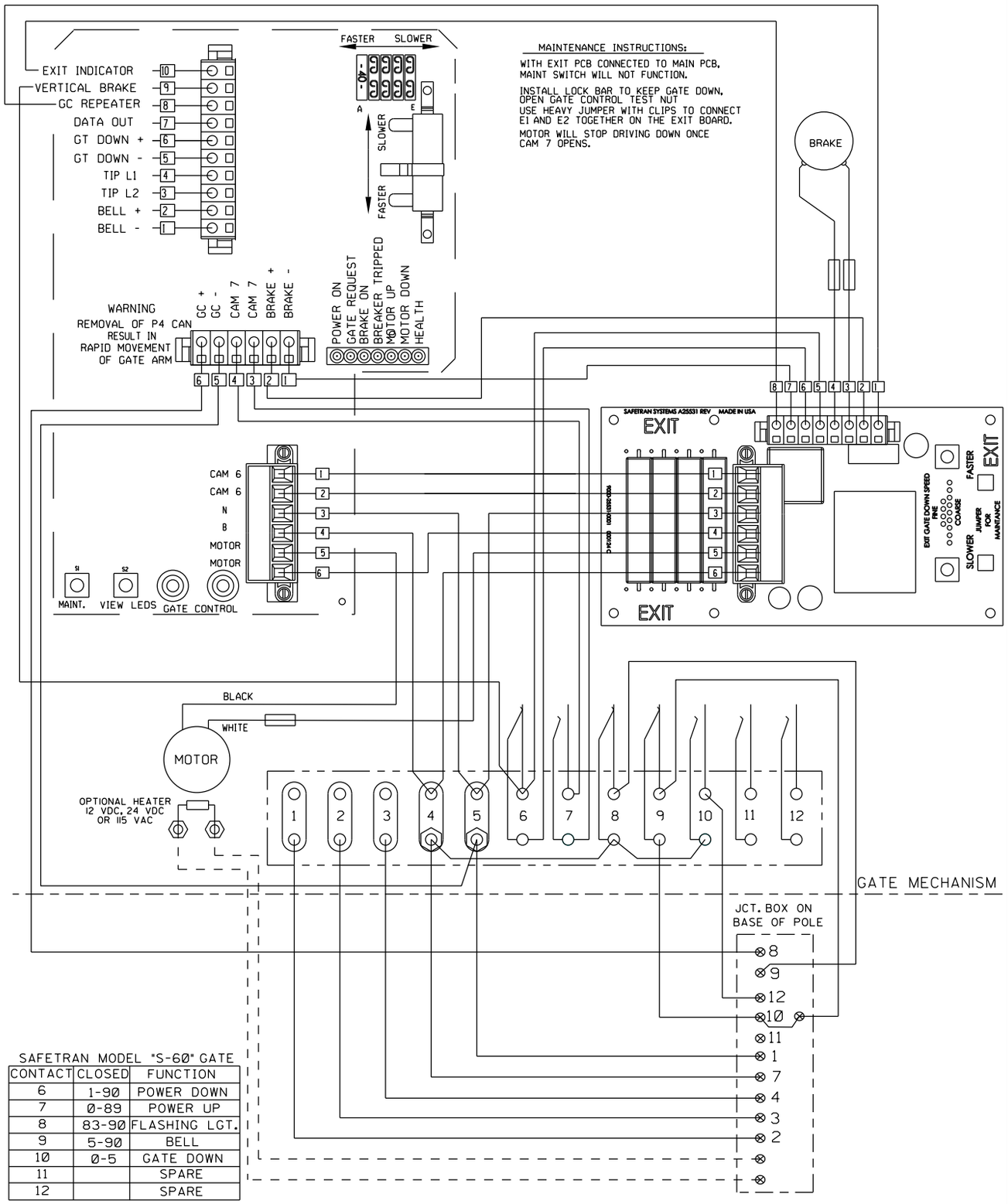

SAFETRAN MODEL "S-60" GATE

CONTACT	CLOSED	FUNCTION
6	1-90	POWER DOWN
7	0-89	POWER UP
8	83-90	FLASHING LGT.
9	5-90	BELL
10	0-5	GATE DOWN
11		SPARE
12		SPARE

NOTE:
ALL WIRING FROM JUNCTION BOX BASE TO GATE, FLASHING LIGHTS AND BELL IS TO BE #10 AWG, UNLESS OTHERWISE NOTED.

S-60 EXIT GATE

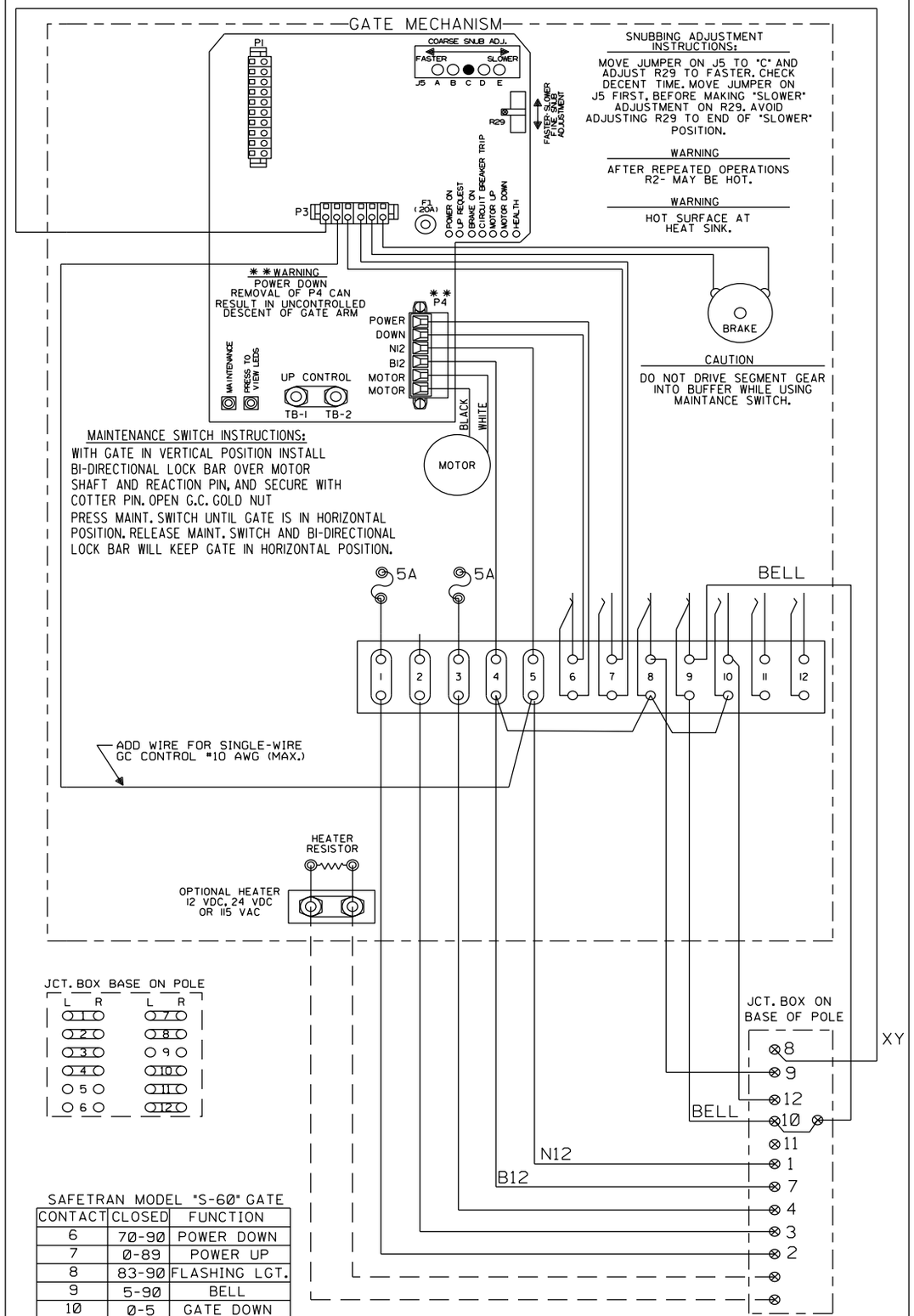

SAFETRAN MODEL "S-60" GATE

CONTACT	CLOSED	FUNCTION
6	70-90	POWER DOWN
7	0-89	POWER UP
8	83-90	FLASHING LGT.
9	5-90	BELL
10	0-5	GATE DOWN
11		SPARE
12		SPARE

NOTE:
ALL WIRING FROM JUNCTION BOX BASE TO GATE, FLASHING LIGHTS AND BELL IS TO BE #10 AWG, UNLESS OTHERWISE NOTED.

S-60 ENTRANCE GATE

NEW SHEET

Designed: 09/27/12
TIER IS PHASE 1 M.P. 239.70 TO M.P. 255.35 TO UPGRADE XING TO 4 QUAD WITH EGMS, VARIOUS C.P.'S
Rec#: WO#: 10804
IS: NBT / / NST/MJF

MODIFICATION LEVEL	
O.A. LAST LEVEL CHECKED	DU
LAST LEVEL MOD THIS TYPICAL	DU
LAST LEVEL BY DESIGNER	DU
CHANGED FROM TYPICAL?	N

REV 01.24.11 4K 2KEGMS S60GWIRING.7

CIRCUIT MODIFICATIONS ARE NOT TO BE MADE WITHOUT AUTHORITY FROM THE OFFICE OF SIGNAL DESIGN

Date: 09/27/12
Des: NST
Chk: NBT
AFE: 10804

UNION PACIFIC RAILROAD
GODFREY, ILLINOIS
TOLLE STREET
SPRINGFIELD SUBDIVISION
Office of AVP Engineering - Signal Omaha, Nebraska

Sh.: 11
DOT 294429C
MP: 252.50
ID: CSL25250.11X