ITCS HIGH SPEED WARNING TIME 80 SECONDS
PRIME WARNING TIME = 40 SECONDS

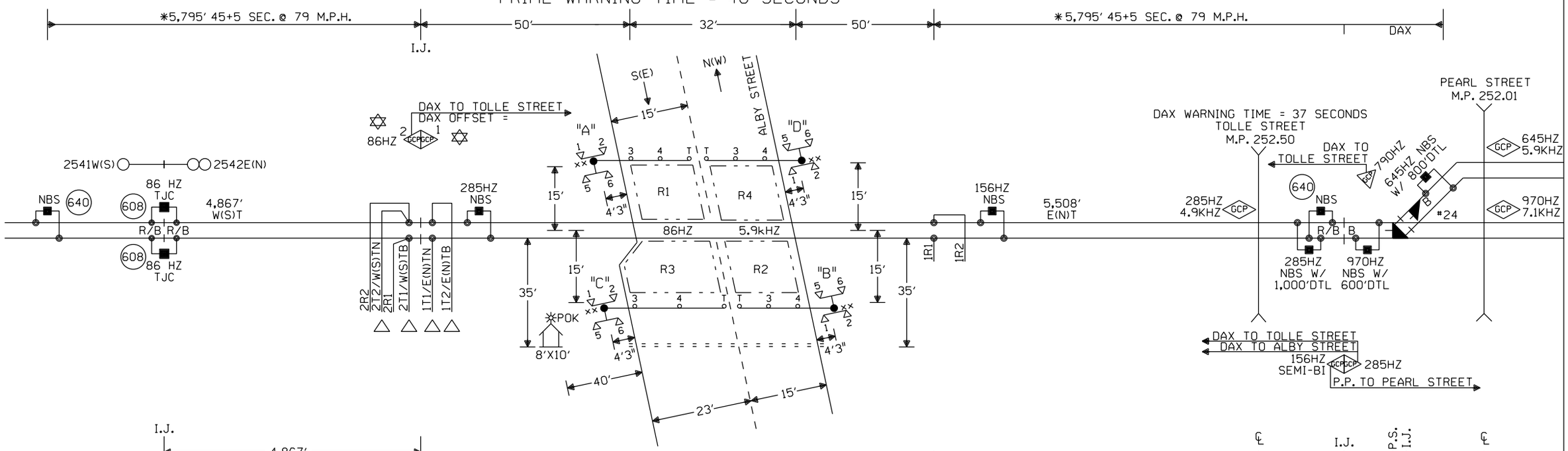

CONNECTS TO M.P. 254.12

CONNECTS TO M.P. 252.50

CONSTRUCTION NOTE:

1. CABIN LOCATION NEEDS TO BE VERIFIED BY ICC PERSONNEL.
2. WHEN PLACING THE HOUSE THE 10' OR LONG SIDE OF THE HOUSE NEEDS TO BE PARALLEL WITH THE TRACKS.
3. ADD EXTENSION ARMS TO THE FLASHERS ALLOWING CLEARANCE FOR THE GATE ARM WHEN IN THE VERTICAL POSITION.
4. * = APPROACHES DESIGNED TO ACCOMODATE ESTIMATED MINIMUM WARNING TIME OF 45 SECONDS FOR FUTURE TRAFFIC SIGNAL INTERCONNECT. PROGRAMMED PRIME WARNING TIME WILL REMAIN AT 40 SECONDS UNTIL TRAFFIC SIGNAL INTERCONNECT IS INSTALLED.

NOTES:

⊗ = TWISTED WIRES INSULATED 1 TWIST PER FT. ALL TRACK WIRES 2C. #6

TRANSMITTER AND RECEIVER LEADS TO BE SEPARATED BY AT LEAST 12" IN TRENCH, LENGTHS SHOULD NOT EXCEED MANUFACTURES RECOMMENDATION.

TOP OF FOUNDATION TO BE AT SAME ELEVATION AS THE SURFACE OF THE TRAVELED WAY & NO MORE THAN 4" ABOVE THE SURFACE OF THE GROUND.

ALL BUNGALOW WIRING TO BE #16 AWG FLEX UNLESS OTHERWISE SPECIFIED EXCEPT ALL GROUND WIRE TO BE #6 AWG FLEX OR LARGER.

ALL WIRING IN GATE MECHANISM TO BE #10 "AWG FLEX".

REFER TO UP STANDARD DWG FOR BUNGALOW GROUNDING.

PORTABLE GENERATOR EXTENSION CORD FOR 240V TO 240V IS PROVIDED AS WELL AS A 120V TO 240V ADAPTER.

ALL LIGHTS TO BE 12" ROUNDELS.

= = = = = = 4" X 120' CONDUIT

LIGHTS: LED LIGHTS

GATE A: 19'
GATE B: 19'
GATE C: 27'
GATE D: 19'

xx = BELL

✡ = GCP TO OPERATE IN SEMI-BI DIRECTIONAL MODE. USE TAB 627 COUPLER.

△ = ENSURE TRACK POLARITY IS TRANSPOSED ACROSS ALL INSULATED JOINTS.

EXIT GATE MANAGEMENT SYSTEM (EGMS) LOOP LOCATION:

1.) 12" FROM CONCRETE CROSSING PANEL. MAY VARY FROM 6" TO 12" DEPENDING ON PAVEMENT QUALITY.
2.) 2' FROM CROSSING CENTERLINE.
3.) 3.5' FROM GATE ARM.
4.) 2' FROM THE EDGE OF THE TRAVELED WAY. MAY BE INCREASED UP TO A MAXIMUM OF 5' WHERE AN IMPROVED SHOULDER OR OTHER EXISTS.
5.) MAXIMUM LOOP WIDTH NOT TO EXCEED 8' AND MINIMUM WIDTH TYPICALLY NOT TO BE LESS THAN 5'. LOOPS BETWEEN TRACKS MUST NOT BE LESS THAN 3'. HOWEVER SMALLER LOOPS ARE ACCEPTABLE.
6.) DISTANCE BETWEEN ADJACENT LOOPS FOR ONE DIRECTION OF TRAFFIC MUST NOT EXCEED 13'.
7.) MAXIMUM LOOP AREA NOT TO EXCEED 144 SQUARE FEET.
8.) MAXIMUM LENGTH OF THE LONGEST SIDE OF A LOOP SHALL NOT EXCEED 28'6".

- - — = EGMS LOOP

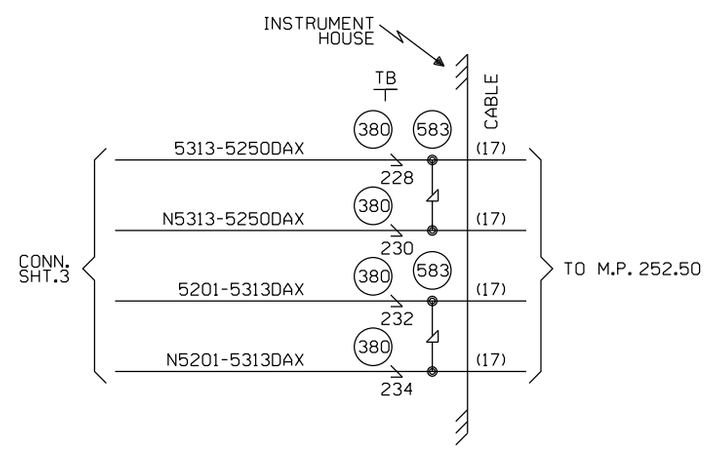

W(S) ← → E(N)

CABLE TABULATION

CABLE NO.17 7C#14 U.G.B.T. HOUSE TO M.P. 252.50

NEW SHEET

					Designed: 09/27/12 TIER IS PHASE 1 M.P. 239.70 TO M.P. 255.35 TO UPGRADE XING TO 4 QUAD WITH EGMS, VARIOUS C.P.'S Rec*: WO*: 10804 IS: NBT / / NST/MJF	MODIFICATION LEVEL		CIRCUIT MODIFICATIONS ARE NOT TO BE MADE WITHOUT AUTHORITY FROM THE OFFICE OF SIGNAL DESIGN	Date: 09/27/12	UNION PACIFIC RAILROAD	Sh.: 1
						Q.A. LAST LEVEL CHECKED	DU		Des: NST	ALTON, ILLINOIS ALBY STREET SPRINGFIELD SUBDIVISION	DOT 294430W
						LAST LEVEL MOD THIS TYPICAL	DU		Chk: NBT		MP: 253.13
						LAST LEVEL BY DESIGNER	DU		AFE: 10804	Office of AVP Engineering - Signal Omaha, Nebraska	ID: CSL25313.1X
						CHANGED FROM TYPICAL?	Y				
						REV 01.24.11 4K 2TKEGMS.1					