ITCS HIGH SPEED WARNING TIME 86 SECONDS
PRIME WARNING TIME = 36 SECONDS

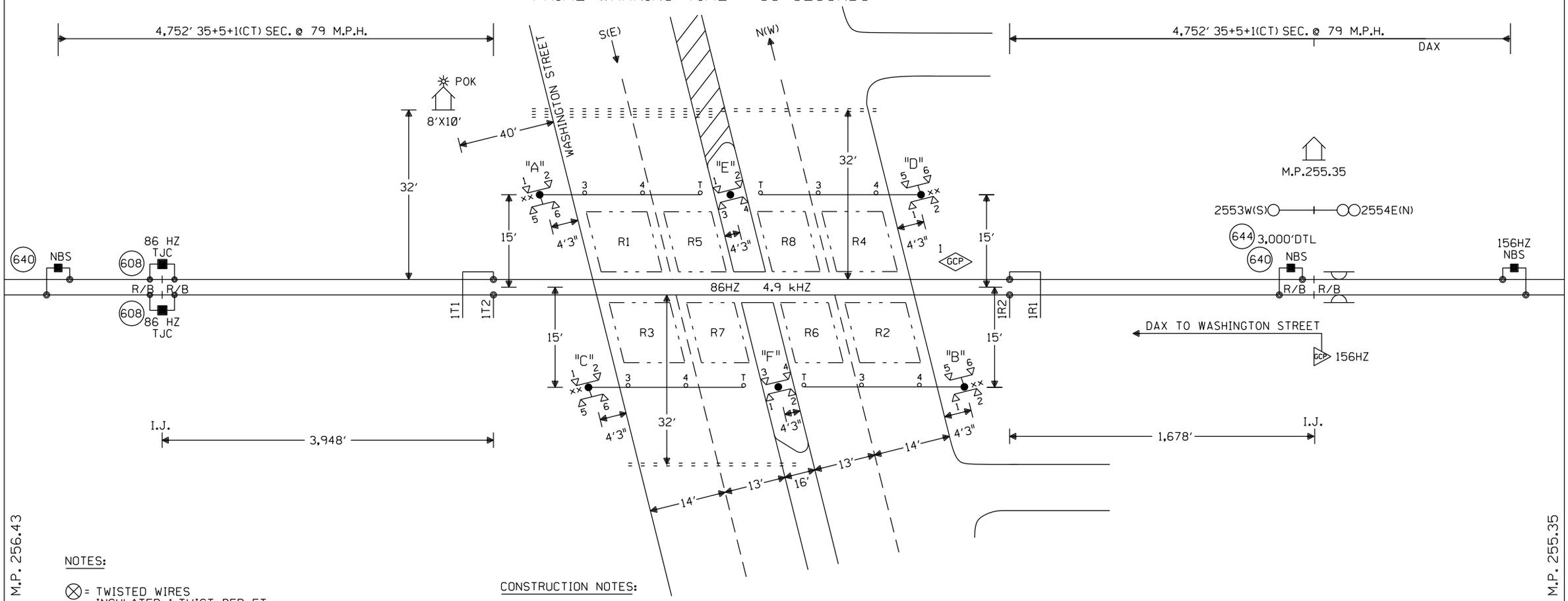

CONNECTS TO M.P. 256.43

CONNECTS TO M.P. 255.35

NOTES:

⊗ = TWISTED WIRES
INSULATED 1 TWIST PER FT.
ALL TRACK WIRES 2C. #6

TRANSMITTER AND RECEIVER LEADS TO BE SEPARATED BY AT LEAST 12" IN TRENCH, LENGTHS SHOULD NOT EXCEED MANUFACTURES RECOMMENDATION.

TOP OF FOUNDATION TO BE AT SAME ELEVATION AS THE SURFACE OF THE TRAVELED WAY & NO MORE THAN 4" ABOVE THE SURFACE OF THE GROUND.

ALL BUNGALOW WIRING TO BE #16 AWG FLEX UNLESS OTHERWISE SPECIFIED EXCEPT ALL GROUND WIRE TO BE #6 AWG FLEX OR LARGER.

ALL WIRING IN GATE MECHANISM TO BE #10 "AWG FLEX".

REFER TO UP STANDARD DWG FOR BUNGALOW GROUNDING.

PORTABLE GENERATOR EXTENSION CORD FOR 240V TO 240V IS PROVIDED AS WELL AS A 120V TO 240V ADAPTER.

ALL LIGHTS TO BE 12" ROUNDELS.

= = = = = = 4" X 270' CONDUIT

LIGHTS: LED LIGHTS

GATE A: 32'
GATE B: 32'
GATE C: 32'
GATE D: 32'

xx = BELL

= PAINTED MEDIAN

TRK 1 ISLAND DISTANCE 173' MINIMUM 120' REQUIRED

PREFERRED ISLAND WIRE CONNECTIONS ARE A MINIMUM 50' FROM FACE OF CURB

CONSTRUCTION NOTES:

1. CABIN LOCATION NEEDS TO BE VERIFIED BY ICC PERSONNEL.
2. WHEN PLACING THE HOUSE, THE 10' OR LONG SIDE OF THE HOUSE NEEDS TO BE PARALLEL WITH THE TRACKS.
3. ADD EXTENSION ARMS TO THE FLASHERS ALLOWING CLEARANCE FOR THE GATE ARM WHEN IN THE VERTICAL POSITION.

EXIT GATE MANAGEMENT SYSTEM (EGMS) LOOP LOCATION:

1.) 12" FROM CONCRETE CROSSING PANEL. MAY VARY FROM 6" TO 12" DEPENDING ON PAVEMENT QUALITY.

2.) 2' FROM CROSSING CENTERLINE.

3.) 3.5' FROM GATE ARM.

4.) 2' FROM THE EDGE OF THE TRAVELED WAY. MAY BE INCREASED UP TO A MAXIMUM OF 5' WHERE AN IMPROVED SHOULDER OR OTHER EXISTS.

5.) MAXIMUM LOOP WIDTH NOT TO EXCEED 8' AND MINIMUM WIDTH TYPICALLY NOT TO BE LESS THAN 5'. LOOPS BETWEEN TRACKS MUST NOT BE LESS THAN 3'. HOWEVER SMALLER LOOPS ARE ACCEPTABLE.

6.) DISTANCE BETWEEN ADJACENT LOOPS FOR ONE DIRECTION OF TRAFFIC MUST NOT EXCEED 13'.

7.) MAXIMUM LOOP AREA NOT TO EXCEED 144 SQUARE FEET.

8.) MAXIMUM LENGTH OF THE LONGEST SIDE OF A LOOP SHALL NOT EXCEED 28'6".

— — = EGMS LOOP

OFFSET AND ISLAND DISTANCES TO BE VERIFIED BY FIELD

W(S) ← ○ → E(N)

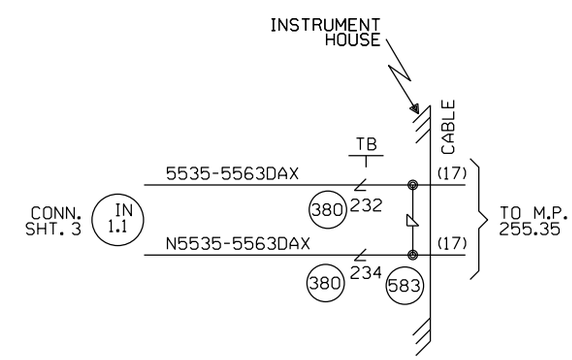

CABLE TABULATION

CABLE #17 7C #14 U.G.B.T. HOUSE TO M.P. 255.35

NEW SHEET

					Designed: 09/27/12 TIER IS PHASE 1 M.P. 239.70 TO M.P. 255.35 TO UPGRADE XING TO 4 QUAD WITH EGMS, VARIOUS C.P.'S Rec#: WO#: 10804 IS: NBT / / / NST / MJF	MODIFICATION LEVEL		CIRCUIT MODIFICATIONS ARE NOT TO BE MADE WITHOUT AUTHORITY FROM THE OFFICE OF SIGNAL DESIGN	Date: 09/27/12	UNION PACIFIC RAILROAD	Sh.: 1
						O. A. LAST LEVEL CHECKED	DU		Des: NST	ALTON, ILLINOIS	DOT 294431D
						LAST LEVEL MOD THIS TYPICAL	DU		Chk: NBT	WASHINGTON STREET	MP: 255.63
						LAST LEVEL BY DESIGNER	DU		AFE: 10804	SPRINGFIELD SUBDIVISION	ID: CSL25563.1X
						CHANGED FROM TYPICAL? REV 01.24.11 4K 2TKEGMS.1	Y			Office of AVP Engineering - Signal Omaha, Nebraska	

The Incremental Train Control System (ITCS) provides advance activation of the crossings for all ITCS equipped trains travleing over 20 M.P.H. The ITCS is a communication-based train control system that provides enforcement and advanced start of public crossings. ITCS vitally monitors the existing crossings as a basis for determining permissible action and uses a radio frequency (RF) data link with a vital communication protocol to send wayside status to the trains. Enforcement of speed limits is performed vitally by an onboard computer (OBC). The wayside components monitor Crossing Warning Systems and relay the information to the train over the RF network as a list of device statuses. The OBC interprets the statuses and enforces all speed limits and braking based upon those statuses. The OBC must receive an acknowledgment from the crossing, verifying the proper operation of the Crossing Warning System, before the train can proceed at high speed through the crossings aprroach circuit. This is the High Speed OK (HSOK) status. If this status is not true, a 79 M.P.H. target speed limit is placed at the start of the conventional track circuit based approach of the crossing.
Conditions that would cause this to happen are:

- The Advance Start Enable test switch is open.
- The Crossing has been activated longer than 3.5 minutes but less than 5 minutes, without a train present on the crossing.
- The loss of communitations longer than 2 minutes 30 seconds.

The most restrictive status in the health status. If the health status for the crossing is not true a 15 M.P.H. target speed limit is placed at the leading island wires of the crossing.
Conditions that would cause this to happen are:

- Activation failure detected. (No vertical gate contact indicating de-energized within 10 seconds of request for crossing to activate)

  If this failure has occurred it requires the advance start enable test switch to be opened to reset the box before any further High Speed operation is allowed.
- The crossing has been activated longer than 5 minutes, without a train present on the crossing.
- The vehicle detector does not indicate clear, or the Gate Down circuit not energized within 20 seconds (Field adjustable) of crossing being requested to activate.
- The vehicle detector health not true. This input consists of the detector loop health, EGMS health, Battery health, and Long Term Occupancy of Vehicle Detector Loop (Greater than 1 minute.)

NEW SHEET

							Designed: 09/27/12 TIER IS PHASE 1 M.P. 239.70 TO M.P. 255.35 TO UPGRADE XING TO 4 QUAD WITH EGMS, VARIOUS C.P.'S Rec*: WO*: 10804 IS: NBT/ / /NST/MJF	CIRCUIT MODIFICATIONS ARE NOT TO BE MADE WITHOUT AUTHORITY FROM THE OFFICE OF SIGNAL DESIGN	Date: 09/27/12 Des: NST Chk: NBT AFE: 10804	UNION PACIFIC RAILROAD ALTON, ILLINOIS WASHINGTON STREET SPRINGFIELD SUBDIVISION Office of AVP Engineering - Signal Omaha, Nebraska	Sh.: 1A DOT 294431D MP: 255.63 ID: CSL25563.1AX

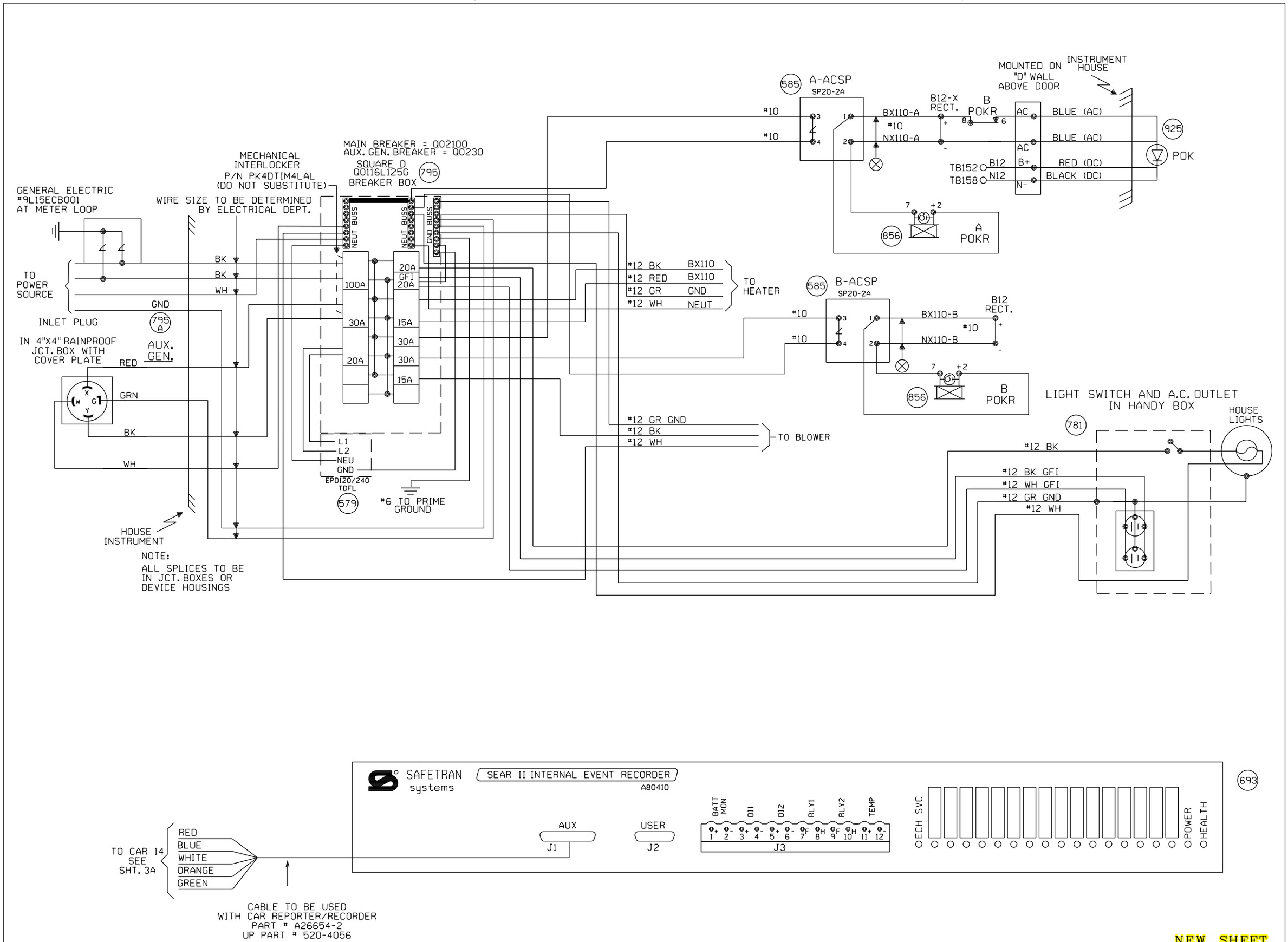

NEW SHEET

Designed: 09/27/12 TIER IS PHASE 1 M.P. 239.70 TO M.P. 255.35 TO UPGRADE XING TO 4 QUAD WITH EGMS, VARIOUS C.P.'S Rec#: WO#: 10804 IS: NBT/ / /NST/MJF	MODIFICATION LEVEL		CIRCUIT MODIFICATIONS ARE NOT TO BE MADE WITHOUT AUTHORITY FROM THE OFFICE OF SIGNAL DESIGN	Date: 09/27/12 Des: NST Chk: NBT AFE: 10804	UNION PACIFIC RAILROAD ALTON, ILLINOIS WASHINGTON STREET SPRINGFIELD SUBDIVISION Office of AVP Engineering - Signal Omaha, Nebraska	Sh.: 2 DOT 294431D MP: 255.63 ID: CSL25563.2X
	Q.A. LAST LEVEL CHECKED	DU				
	LAST LEVEL MOD THIS TYPICAL	DU				
	LAST LEVEL BY DESIGNER	DU				
	CHANGED FROM TYPICAL?	Y				
	REV 01.24.11 4K 2TKEGMS.2					

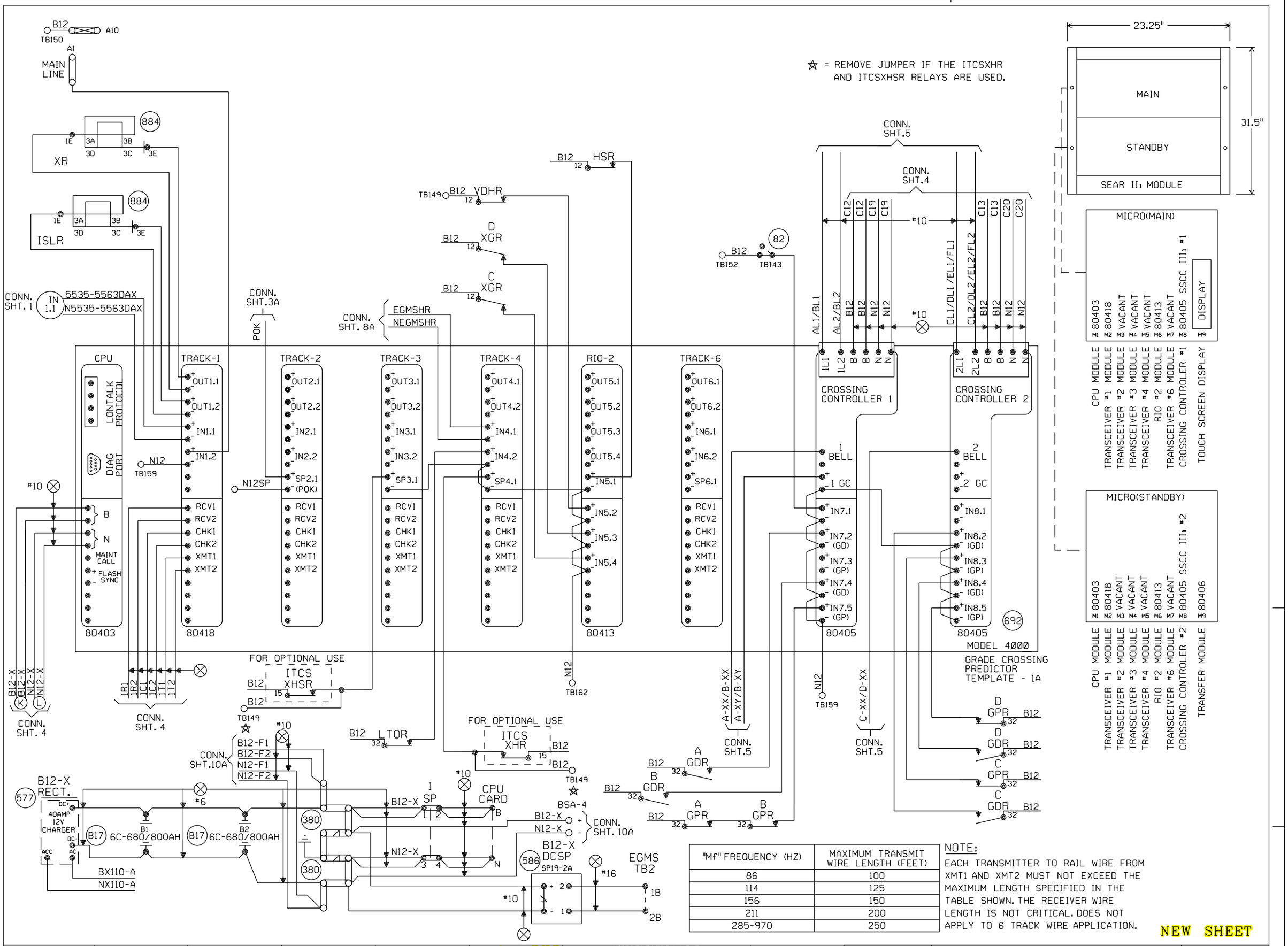

☆ = REMOVE JUMPER IF THE ITCSXHR AND ITCSXHSR RELAYS ARE USED.

"Mf" FREQUENCY (HZ)	MAXIMUM TRANSMIT WIRE LENGTH (FEET)
86	100
114	125
156	150
211	200
285-970	250

NOTE:
EACH TRANSMITTER TO RAIL WIRE FROM XMT1 AND XMT2 MUST NOT EXCEED THE MAXIMUM LENGTH SPECIFIED IN THE TABLE SHOWN. THE RECEIVER WIRE LENGTH IS NOT CRITICAL. DOES NOT APPLY TO 6 TRACK WIRE APPLICATION.

NEW SHEET

Designed: 09/27/12
TIER 1S PHASE 1 M.P. 239.70 TO M.P. 255.35 TO UPGRADE XING TO 4 QUAD WITH EGMS, VARIOUS C.P.'S
Rec*: WO*: 10804
1S: NBT/ /NST/MJF

MODIFICATION LEVEL	
O. A. LAST LEVEL CHECKED	DU
LAST LEVEL MOD THIS TYPICAL	DU
LAST LEVEL BY DESIGNER	DU
CHANGED FROM TYPICAL?	Y

REV 01.24.11 4K 2TKEGMS.3

CIRCUIT MODIFICATIONS ARE NOT TO BE MADE WITHOUT AUTHORITY FROM THE OFFICE OF SIGNAL DESIGN

Date: 09/27/12
Des: NST
Chk: NBT
AFE: 10804

UNION PACIFIC RAILROAD
ALTON, ILLINOIS
WASHINGTON STREET
SPRINGFIELD SUBDIVISION
Office of AVP Engineering - Signal Omaha, Nebraska

Sh.: 3
DOT 294431D
MP: 255.63
ID: CSL25563.3X

Minimum Program Steps Report

Location and SIN

DOT Number: 294431D
Milepost Number: 255.63
Site Name: ALTON, IL

SIN: 762010010016 *

* Parameter is part of office check number calculation.

MCF and Template Selection

MCF Name: GCP-T6X-02-6.mcf
MCF Revision: 26
MCFCRC: 494D2656

Template = 1A:6 Trk Bi (OCCN) *

* Parameter is part of office check number calculation.

Minimum Program Steps

MS4000 configuration
Track 1 : GCP Frequency = 86 Hz (OCCN,TCN) (Hidden) *
Track 1 : Prime UAX = IP (OCCN) (Hidden) *
Track 1 : Prime UAX Pickup = 15 sec (OCCN) (Hidden) *
Track 1 : Isl Frequency = 4.9 kHz (OCCN) (Hidden) *
Track 1 : Pickup Delay (2s +) = 2 sec (OCCN) (Hidden) *
IN 1.1 = T1 Prime UAX (OCCN) (Hidden) *
IN 1.2 = Out Of Service IP 1 (OCCN) (Hidden) *

MS4000 Predictor
Track 1 : Prime Warning Time = 36 sec (OCCN) (Hidden) *

BASIC: module configuration
Track 5/RIO 2 Slot = RIO (OCCN) *

GCP: track 1
Track 1 : GCP Frequency = 86 Hz (OCCN,TCN) *
Track 1 : Approach Distance = 4752 ft (OCCN,TCN) *
Track 1 : Island Distance = 173 ft (Set in Field,TCN)

GCP: track 1 prime
Track 1 : Prime Warning Time = 36 sec (OCCN) *
Track 1 : Prime UAX = IP (OCCN) *
Track 1 : Prime UAX Pickup = 15 sec (OCCN) *

ISLAND: track 1
Track 1 : Isl Frequency = 4.9 kHz (OCCN) *
Track 1 : Pickup Delay (2s +) = 2 sec (OCCN) *

AND: AND 1 XR
AND 1 Enable Used = Yes (OCCN) *

ADVANCED: out of service
OOS Control = OOS IPs (OCCN) *

SSCC
Bell On Gate Rising = Yes (OCCN) *

SSCC: 2
SSCC-2 Number of GPs = 2 (OCCN) *
SSCC-2 Number of GDs = 2 (OCCN) *

OUTPUT: assignment page 1
OUT 1.1 = AND 1 XR (OCCN) *
OUT 1.2 = T1 Island (OCCN) *

INPUT: assignment page 1
IN 1.1 = T1 Prime UAX (OCCN) *
IN 1.2 = Out Of Service IP 1 (OCCN) *

INPUT: assignment page 2
IN 5.1 = AND 1 XR Enable (OCCN) *
IN 5.2 = GP 1.1 (OCCN) *

IO: assignment SSCC
IN 7.1 = AND 1 XR Enable (OCCN) *
IN 7.2 = GD 1.1 (OCCN) *
IN 7.4 = GD 1.2 (OCCN) *
IN 8.2 = GD 2.1 (OCCN) *
IN 8.3 = GP 2.1 (OCCN) *
IN 8.4 = GD 2.2 (OCCN) *
IN 8.5 = GP 2.2 (OCCN) *

SEAR: inputs
SP 3.1 = General 3 (OCCN) *
SP 4.1 = General 4 (OCCN) *

SEAR: slot 1-4 inputs
IN 4.1 = Vehicle Det Hlth (OCCN) *
IN 4.2 = 3 Vehicle Detect (OCCN) *

SEAR: inputs slot 5
IN 5.3 = General 1 (OCCN) *
IN 5.4 = General 2 (OCCN) *

Express: MS4000 configuration
Track 1 : GCP Frequency = 86 Hz (OCCN,TCN) (Hidden) *
Track 1 : Prime UAX = IP (OCCN) (Hidden) *
Track 1 : Prime UAX Pickup = 15 sec (OCCN) (Hidden) *
Track 1 : Pickup Delay (2s +) = 2 sec (OCCN) (Hidden) *
IN 1.1 = T1 Prime UAX (OCCN) (Hidden) *
IN 1.2 = Out Of Service IP 1 (OCCN) (Hidden) *

Express: MS4000 Predictor
Track 1 : Prime Warning Time = 36 sec (OCCN) (Hidden) *

* Parameter is part of office check number calculation.

Check Numbers

Office Check Number: 544267D9
Config. Check Number: 3AA8AF61
(Based on MCF Revision 26)

Parameters not part of office check number calculation:

Track 1 : Island Distance = 173 ft (Set in Field)

Comments

<none>

Configuration Package File

Filename: CSL25563_294431D.pac
Path: H:\UP\Springfield Sub Tier 1 Ph. 1 11-419-1\PAC Files\MP 255.63\
Date/Time: 1/07/2016 9:42:38
DT Version: 5.7.3

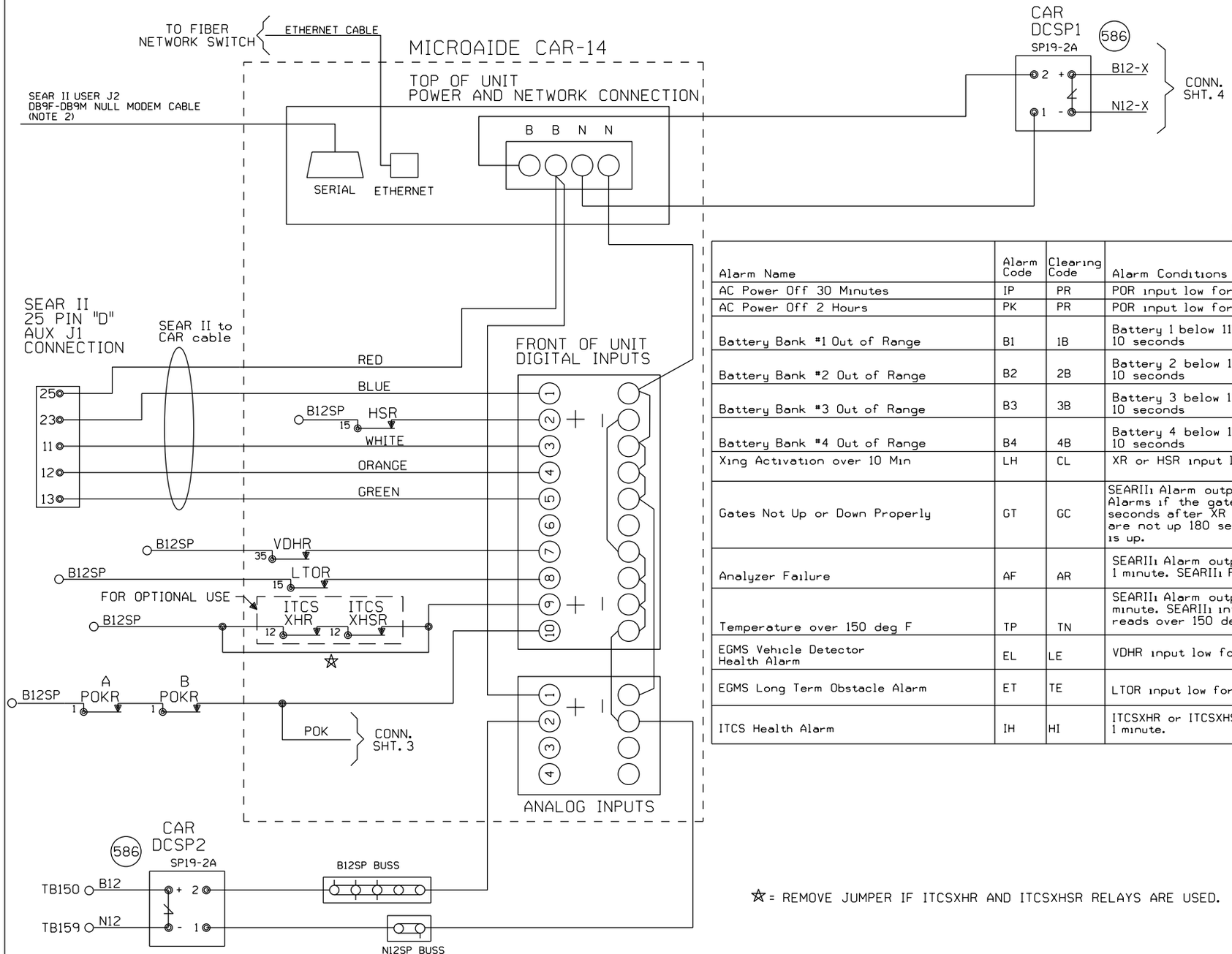

NOTE:
1) DO NOT JUMPER UNUSED INPUTS
2) THE CAR14 SERIAL PORT IS AVAILABLE TO ADD REMOTE CONNECTIVITY TO EXISTING LOGGING EQUIPMENT. USE NULL MODEM CABLE WITH SHIELDING DISCONNECTED AT ONE OR BOTH SIDES.

ANALOG INPUTS:
A1) B12X BATTERY BANK
A2) B12 BATTERY BANK
A3) BATTERY BANK 3
A4) BATTERY BANK 4

DIGITAL INPUTS
D1) XR (BLUE WIRE)
D2) HSR
D3) ANALYZER FAILURE (WHITE WIRE)
D4) HIGH TEMPERATURE (ORANGE WIRE)
D5) GATES NOT UP OR DOWN PROPERLY (GREEN WIRE)
D6)
D7) VDHR - EGMS LOOP HEALTH
D8) LTOR - EGMS LONG-TERM OBSTACLE
D9) ITCS HEALTH (JUMPER TO B12SP IF UNUSED)
D10) POWER OFF INDICATION

CONFIG: C14HISPEED

Alarm Name	Alarm Code	Clearing Code	Alarm Conditions	Alarm Clearing Conditions	Cleared by Maintainer Mode?
AC Power Off 30 Minutes	IP	PR	POR input low for 30 minutes.	POR input high for 5 minutes.	No
AC Power Off 2 Hours	PK	PR	POR input low for 2 Hours.	POR input high for 5 minutes.	No
Battery Bank #1 Out of Range	B1	1B	Battery 1 below 11V or over 19V for 10 seconds	Battery 1 between 11V or over 19V for 5 minutes	No
Battery Bank #2 Out of Range	B2	2B	Battery 2 below 11V or over 19V for 10 seconds	Battery 2 between 11V or over 19V for 5 minutes	No
Battery Bank #3 Out of Range	B3	3B	Battery 3 below 11V or over 19V for 10 seconds	Battery 3 between 11V or over 19V for 5 minutes	No
Battery Bank #4 Out of Range	B4	4B	Battery 4 below 11V or over 19V for 10 seconds	Battery 4 between 11V or over 19V for 5 minutes	No
Xing Activation over 10 Min	LH	CL	XR or HSR input low for 10 minutes.	XR and HSR input high for 10 seconds.	Yes
Gates Not Up or Down Properly	GT	GC	SEARII1 Alarm output high for 5 seconds. Alarms if the gates are not down 45 seconds after XR drops, or the gates are not up 180 seconds after the XR is up.	SEARII1 alarm output low for 5 seconds. Gates have recovered	No
Analyzer Failure	AF	AR	SEARII1 Alarm output high for 1 minute. SEARII1 Failure	SearII1 alarm output low for 5 seconds. SEARII1 has recovered after an analyzer failure alarm.	No
Temperature over 150 deg F	TP	TN	SEARII1 Alarm output high for 1 minute. SEARII1 internal thermometer reads over 150 degrees F.	SEARII1 Alarm Output low for 5 minutes. Temperature has reduced after a High-Temp alarm.	No
EGMS Vehicle Detector Health Alarm	EL	LE	VDHR input low for 10 seconds	VDHR input is high for 5 seconds	No
EGMS Long Term Obstacle Alarm	ET	TE	LTOR input low for 1 minute	LTOR input is high for 5 seconds	No
ITCS Health Alarm	IH	HI	ITCSXHR or ITCSXHSR low for 1 minute.	ITCSXHR or ITCSXHSR high for 5 seconds.	No

☆ = REMOVE JUMPER IF ITCSXHR AND ITCSXHSR RELAYS ARE USED.

NEW SHEET

Designed: 09/27/12
TIER 1S PHASE 1 M.P. 239.70 TO M.P. 255.35 TO UPGRADE XING TO 4 QUAD WITH EGMS, VARIOUS C.P.'S
Rec#: WO#: 10804
1S: NBT / / NST/MJF

MODIFICATION LEVEL	
O. A. LAST LEVEL CHECKED	DU
LAST LEVEL MOD THIS TYPICAL	DU
LAST LEVEL BY DESIGNER	DU
CHANGED FROM TYPICAL?	Y

REV 01.24.11 4K ACDCCAR14SII.3

CIRCUIT MODIFICATIONS ARE NOT TO BE MADE WITHOUT AUTHORITY FROM THE OFFICE OF SIGNAL DESIGN

Date: 09/27/12
Des: NST
Chk: NBT
AFE: 10804

UNION PACIFIC RAILROAD
ALTON, ILLINOIS
WASHINGTON STREET
SPRINGFIELD SUBDIVISION
Office of AVP Engineering - Signal Omaha, Nebraska

Sh.: 3A
DOT 294431D
MP: 255.63
ID: CSL25563.3AX

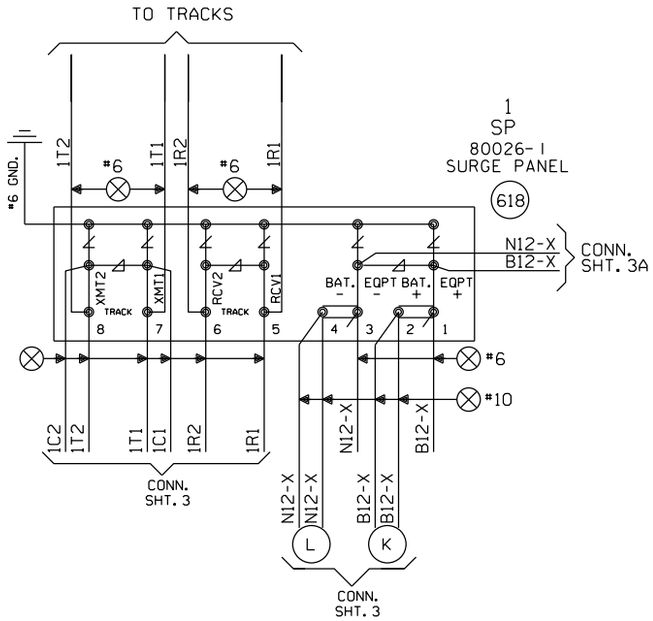

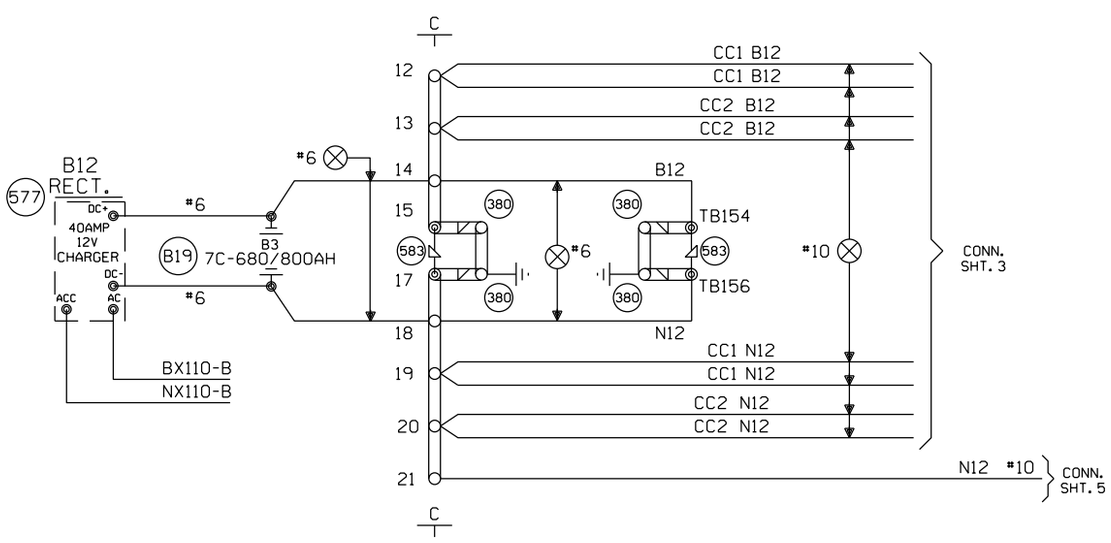

LEFT

TOP

775

VOLTAGE MONITOR 520603-2V150A

RAILWAY EQUIPMENT CO.
MPLS, MN 763-972-2200

PASSWORD		The Password to adjust parameters is 5.
MAX VCH1	SET ---- . ---	High voltage setpoint for channel one.
LOW VCH1	SET ---- . ---	Low voltage setpoint for channel one.
DELAY CH1	SET ---------	Delay time in sec. before a fault is set for ch. one.
MAX VCH2	SET ---- . ---	High voltage setpoint for channel two.
LOW VCH2	SET ---- . ---	Low voltage setpoint for channel two.
HIGH AMP	SET ---------	High current setpoint for channel two.
LOW AMP	SET ---------	Low current setpoint for channel two.
HIGH TEMP	SET ---------	High temp. setpoint for channel two.
LOW TEMP	SET ---------	Low temp. setpoint for channel two.
DELAY CH2	SET ---------	Delay time in sec. before a fault is set for ch. two.

MENU OPERATION: Depressing the MODE button will move through all screens. Depressing the INCREASE or DECREASE button will increase or decrease the desired value

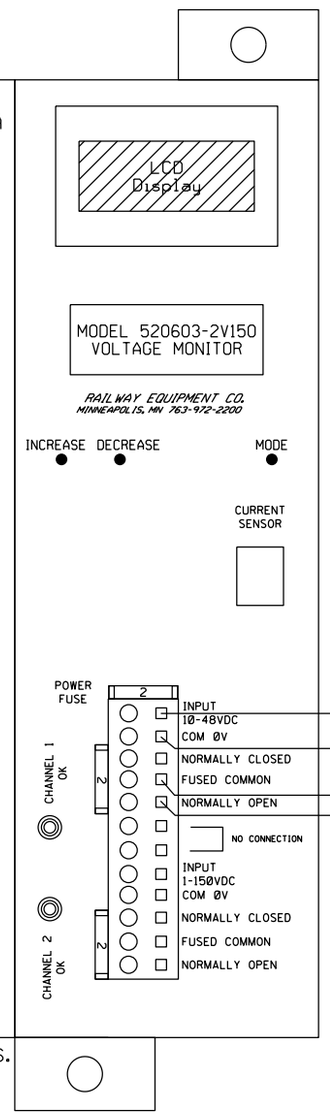

LOW VOLTAGE SETPOINT IS TO BE SET AT 11 VOLTS.

NEW SHEET

Designed: 09/27/12
TIER 1S PHASE 1 M.P. 239.70 TO M.P. 255.35 TO UPGRADE XING TO 4 QUAD WITH EGMS, VARIOUS C.P.'S
Rec*: WO*: 10804
IS: NBT/ / NST/MJF

MODIFICATION LEVEL	
O. A. LAST LEVEL CHECKED	DU
LAST LEVEL MOD THIS TYPICAL	DU
LAST LEVEL BY DESIGNER	DU
CHANGED FROM TYPICAL?	Y

REV 01.24.11 4K 2TKEGMS.4

CIRCUIT MODIFICATIONS ARE NOT TO BE MADE WITHOUT AUTHORITY FROM THE OFFICE OF SIGNAL DESIGN

Date: 09/27/12
Des: NST
Chk: NBT
AFE: 10804

UNION PACIFIC RAILROAD
ALTON, ILLINOIS
WASHINGTON STREET
SPRINGFIELD SUBDIVISION
Office of AVP Engineering - Signal Omaha, Nebraska

Sh.: 4
DOT 294431D
MP: 255.63
ID: CSL25563.4X

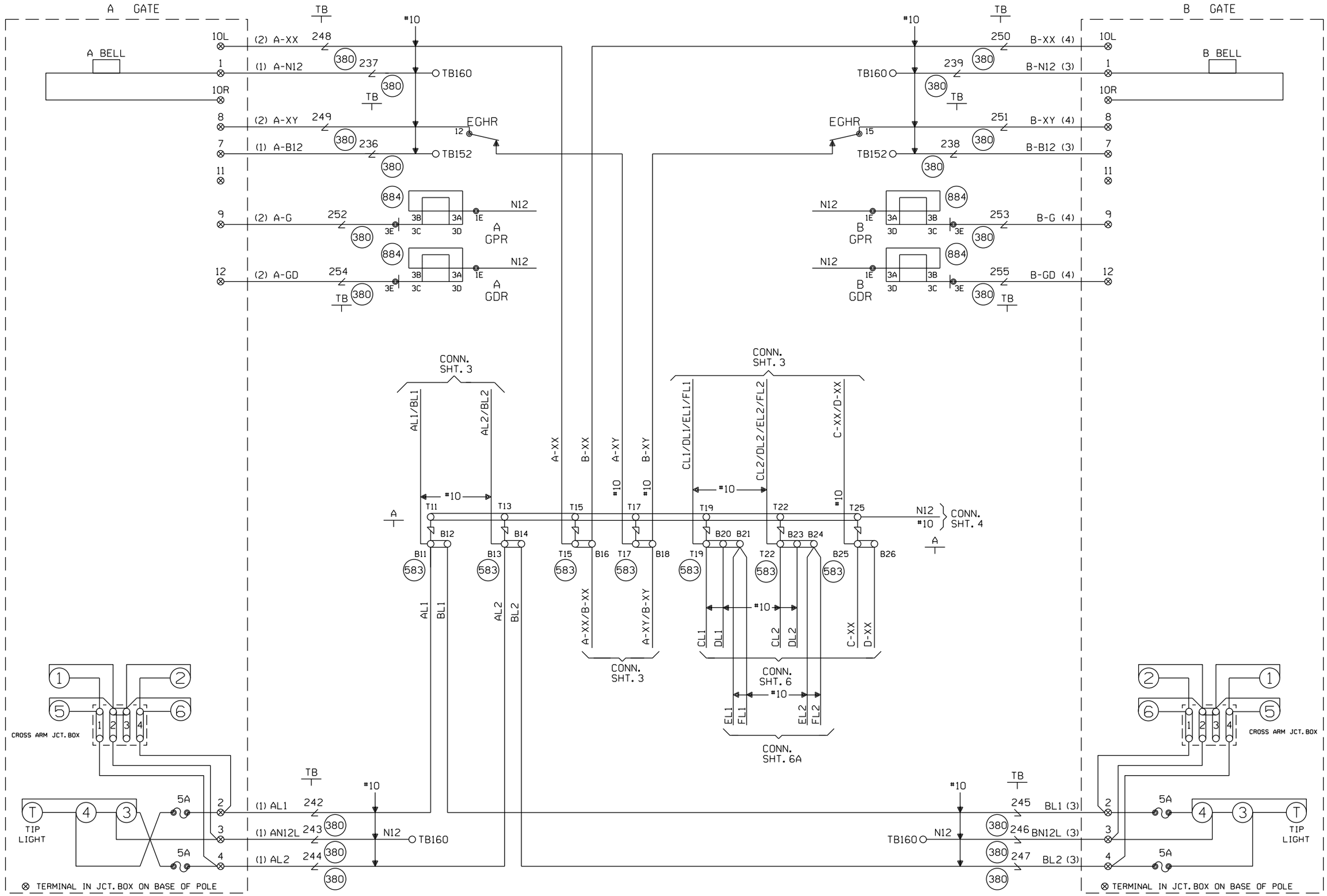

CABLE TABULATION

CABLE NO. 1 5C. NO.6 U.G.B.T.
CABLE NO. 2 7C. NO.14 U.G.B.T.
CABLE NO. 3 5C. NO.6 U.G.B.T.
CABLE NO. 4 7C. NO.14 U.G.B.T.

NEW SHEET

Designed: 09/27/12
TIER 1S PHASE 1 M.P. 239.70 TO M.P. 255.35 TO UPGRADE XING TO 4 QUAD WITH EGMS, VARIOUS C.P.'S
Rec*: WO*: 10804
IS: NBT/ / /NST/MJF

MODIFICATION LEVEL	
O.A. LAST LEVEL CHECKED	DU
LAST LEVEL MOD THIS TYPICAL	DU
LAST LEVEL BY DESIGNER	DU
CHANGED FROM TYPICAL?	Y
REV 01.24.11 4K 2TKEGMS.5	

CIRCUIT MODIFICATIONS ARE NOT TO BE MADE WITHOUT AUTHORITY FROM THE OFFICE OF SIGNAL DESIGN

Date: 09/27/12
Des: NST
Chk: NBT
AFE: 10804

UNION PACIFIC RAILROAD
ALTON, ILLINOIS
WASHINGTON STREET
SPRINGFIELD SUBDIVISION
Office of AVP Engineering - Signal Omaha, Nebraska

Sh.: 5
DOT 294431D
MP: 255.63
ID: CSL25563.5X

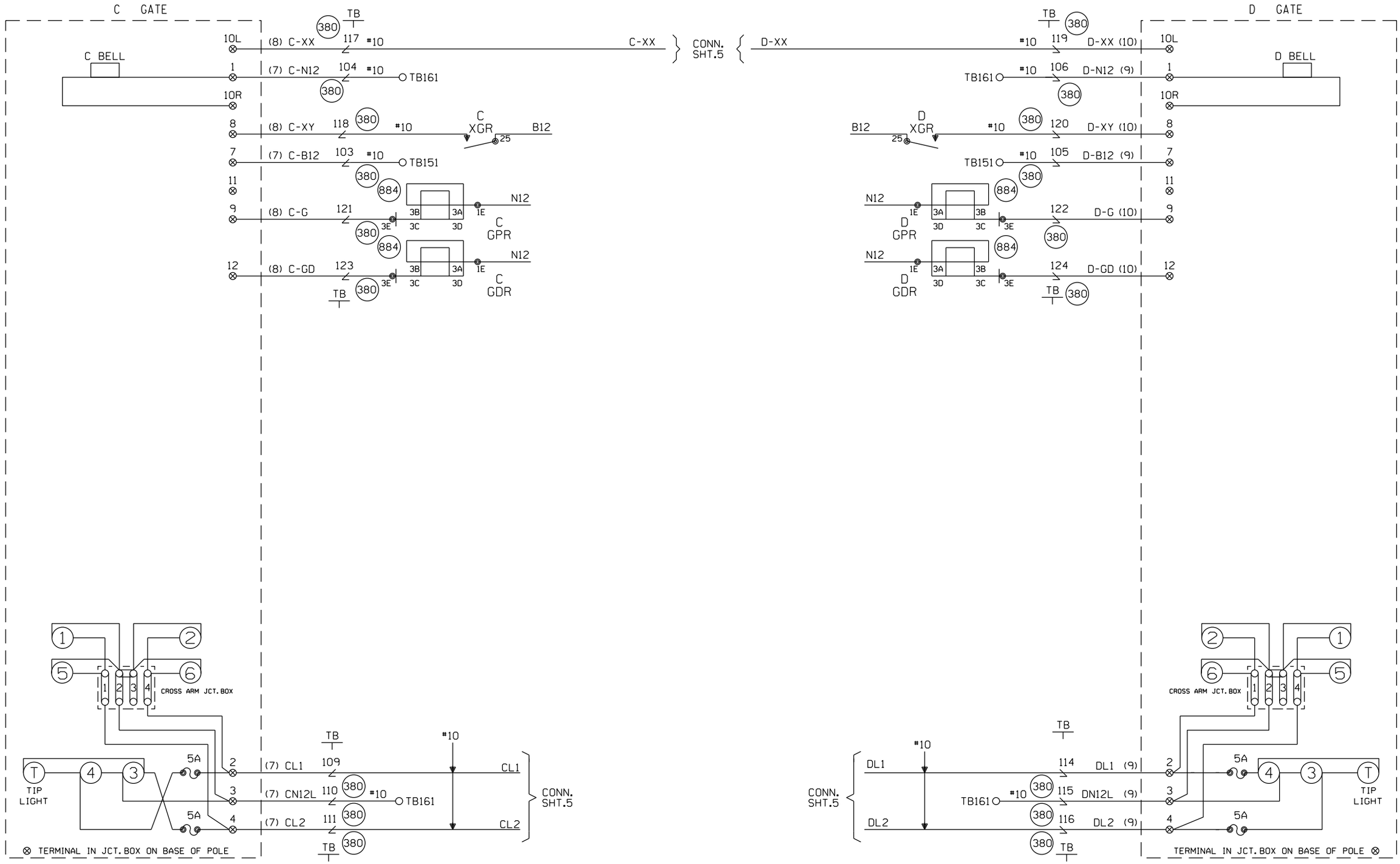

CABLE TABULATION

CABLE NO. 7 5C. NO.6 U.G.B.T.
CABLE NO. 8 7C. NO.14 U.G.B.T.
CABLE NO. 9 5C. NO.6 U.G.B.T.
CABLE NO. 10 7C. NO.14 U.G.B.T.

NEW SHEET

Designed: 09/27/12
TIER IS PHASE 1 M.P. 239.70 TO M.P. 255.35 TO UPGRADE XING TO 4 QUAD WITH EGMS, VARIOUS C.P.'S
Rec#: WO#: 10804
IS: NBT/ / /NST/MJF

MODIFICATION LEVEL	
Q. A. LAST LEVEL CHECKED	DU
LAST LEVEL MOD THIS TYPICAL	DU
LAST LEVEL BY DESIGNER	DU
CHANGED FROM TYPICAL?	Y

REV 01.24.11 4K 2TKEGMS.6

CIRCUIT MODIFICATIONS ARE NOT TO BE MADE WITHOUT AUTHORITY FROM THE OFFICE OF SIGNAL DESIGN

Date: 09/27/12
Des: NST
Chk: NBT
AFE: 10804

UNION PACIFIC RAILROAD
ALTON, ILLINOIS
WASHINGTON STREET
SPRINGFIELD SUBDIVISION
Office of AVP Engineering - Signal Omaha, Nebraska

Sh.: 6
DOT 294431D
MP: 255.63
ID: CSL25563.6X

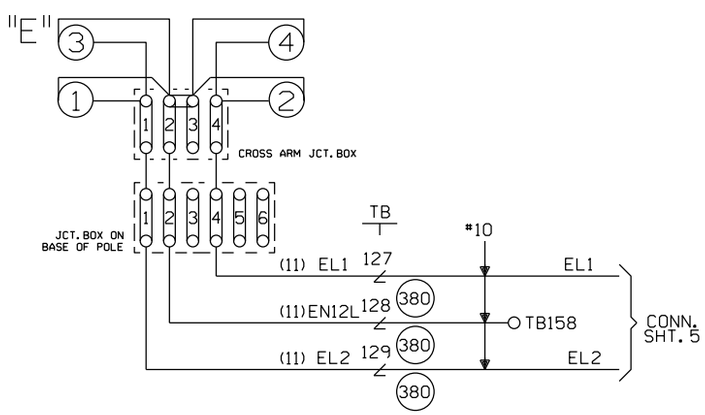

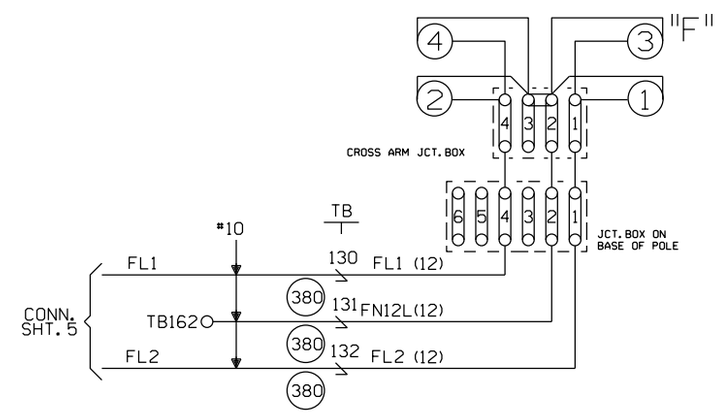

CABLE TABULATION

CABLE NO. 11 5C. NO. 6 U.G.B.T. TO FLASHER E
CABLE NO. 12 5C. NO. 6 U.G.B.T. TO FLASHER F

NEW SHEET

Designed: 09/27/12

TIER 1S PHASE 1 M.P. 239.70 TO M.P. 255.35 TO UPGRADE XING TO 4 QUAD WITH EGMS, VARIOUS C.P.'S

Rec*: NBT / WO*: 10804
IS: / NST/MJF

MODIFICATION LEVEL	
O. A. LAST LEVEL CHECKED	DU
LAST LEVEL MOD THIS TYPICAL	DU
LAST LEVEL BY DESIGNER	DU
CHANGED FROM TYPICAL?	Y

REV 01.24.11 4K CGTYP.6

CIRCUIT MODIFICATIONS ARE NOT TO BE MADE WITHOUT AUTHORITY FROM THE OFFICE OF SIGNAL DESIGN

Date: 09/27/12
Des: NST
Chk: NBT
AFE: 10804

UNION PACIFIC RAILROAD

ALTON, ILLINOIS
WASHINGTON STREET
SPRINGFIELD SUBDIVISION

Office of AVP Engineering - Signal Omaha, Nebraska

Sh.: 6A
DOT 294431D
MP: 255.63
ID: CSL25563.6AX

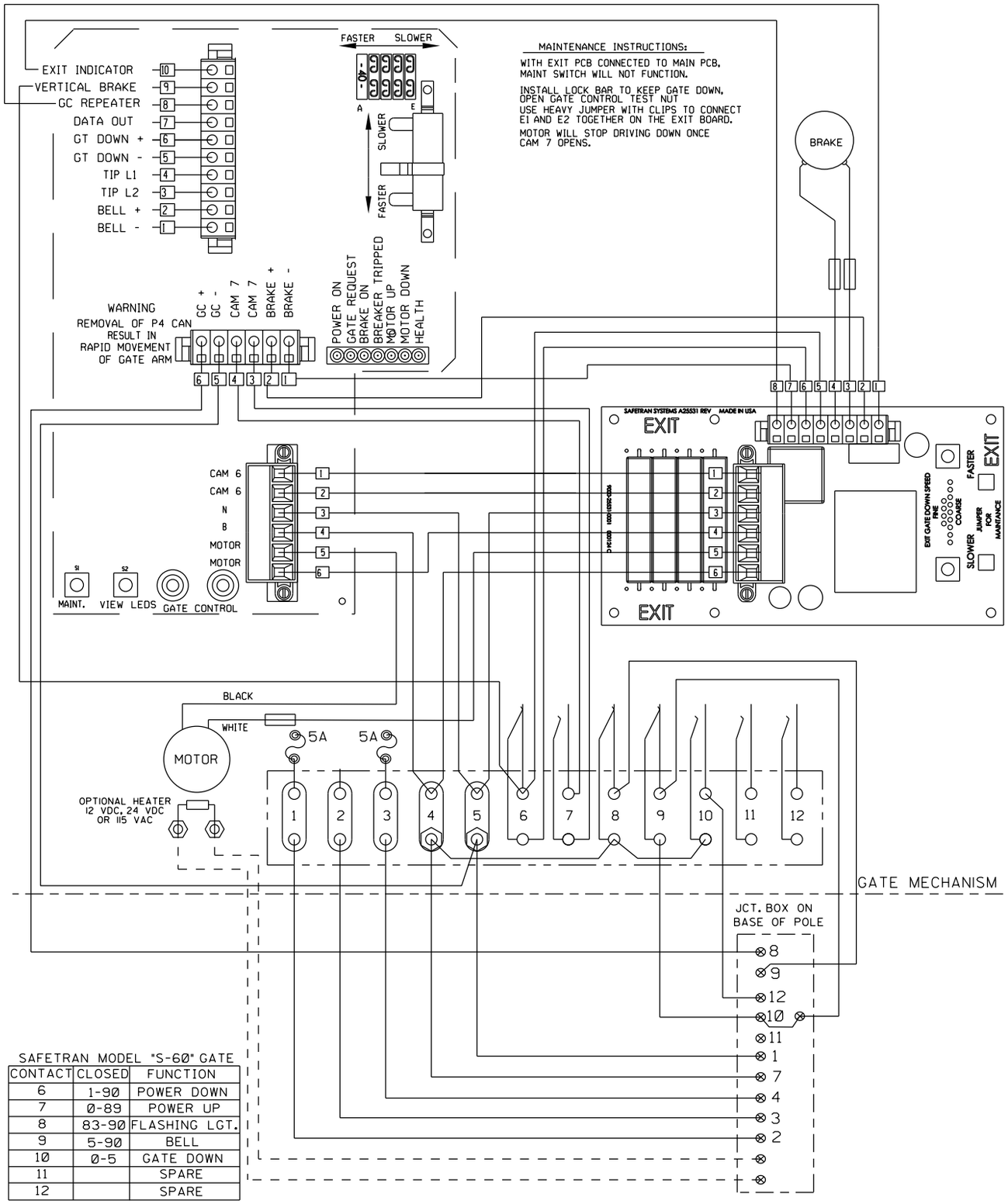

SAFETRAN MODEL "S-60" GATE

CONTACT	CLOSED	FUNCTION
6	1-90	POWER DOWN
7	0-89	POWER UP
8	83-90	FLASHING LGT.
9	5-90	BELL
10	0-5	GATE DOWN
11		SPARE
12		SPARE

NOTE:
ALL WIRING FROM JUNCTION BOX BASE TO GATE, FLASHING LIGHTS AND BELL IS TO BE #10 AWG, UNLESS OTHERWISE NOTED.

S-60 EXIT GATE

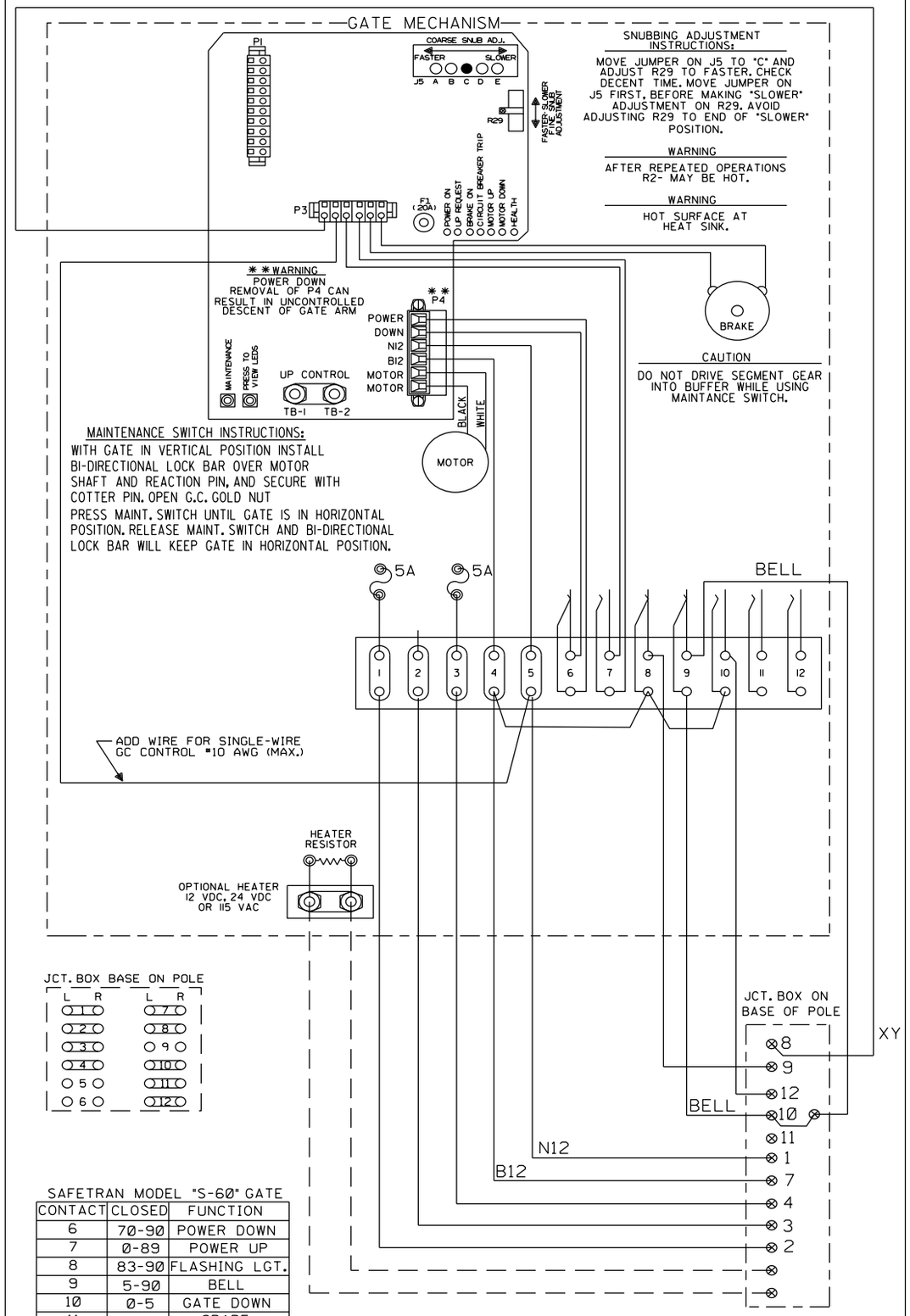

SAFETRAN MODEL "S-60" GATE

CONTACT	CLOSED	FUNCTION
6	70-90	POWER DOWN
7	0-89	POWER UP
8	83-90	FLASHING LGT.
9	5-90	BELL
10	0-5	GATE DOWN
11		SPARE
12		SPARE

NOTE:
ALL WIRING FROM JUNCTION BOX BASE TO GATE, FLASHING LIGHTS AND BELL IS TO BE #10 AWG, UNLESS OTHERWISE NOTED.

S-60 ENTRANCE GATE

NEW SHEET

Designed: 09/27/12
TIER 1S PHASE 1 M.P. 239.70 TO M.P. 255.35 TO UPGRADE XING TO 4 QUAD WITH EGMS, VARIOUS C.P.'S
Rec#: WO#: 10804
1S: NBT/ NST/MJF

MODIFICATION LEVEL	
O. A. LAST LEVEL CHECKED	DU
LAST LEVEL MOD THIS TYPICAL	DU
LAST LEVEL BY DESIGNER	DU
CHANGED FROM TYPICAL?	N

REV 01.24.11 4K 2KEGMS S60GWIRING.7

CIRCUIT MODIFICATIONS ARE NOT TO BE MADE WITHOUT AUTHORITY FROM THE OFFICE OF SIGNAL DESIGN

Date: 09/27/12
Des: NST
Chk: NBT
AFE: 10804

UNION PACIFIC RAILROAD
ALTON, ILLINOIS
WASHINGTON STREET
SPRINGFIELD SUBDIVISION
Office of AVP Engineering - Signal Omaha, Nebraska

Sh.: 7
DOT 294431D
MP: 255.63
ID: CSL25563.7X

EGMS
PROGRAM INFORMATION

PROGRAM VERSION 4.4

EGMS DISPLAY PARAMETERS

PARAMETER	
STARTUP LOGO	UPRR
BACKLIGHT TIMEOUT	015
BUZZER ENABLE	YES
DIRECTION INDICATORS	↓E ↑W
BUNGALOW QUAD	SB ENTR
DISPLAY QZI	NO
LOCAL PREFIX	'R'
REMOTE PREFIX	'T'
CROSSING NAME	WASHINGTON STREET
CROSSING DESCRIPTION	4 QUAD PUB AT GRADE
CROSSING DOT #	294431D

EGMS ALARM PARAMETERS

PARAMETER	
GATO ALARM DELAY	000
GATO GATE DELAY	000
MAX GATE RELEASE	09.0 *
MAX GATE RESPONSE	03.0 *
CYCLE RESTORE	001
MTCD PRESENCE	000
DET FAIL ALARM	YES
DET RESTORE DELAY	000
MAX DET FAILS	000
AUX IN 1 ENABLE	NO
AUX IN 1 RESTORE	000
AUX IN 2 ENABLE	NO
AUX IN 2 RESTORE	000
AUX IN 3 ENABLE	NO
AUX IN 3 RESTORE	000
AUX IN 4 ENABLE	NO
AUX IN 4 RESTORE	000

* ADJUST GATE RELEASE, AND RESPONSE TIMES IN FIELD BASED ON ACTUAL GATE OPERATIONS, AS NECESSARY.

EGMS OPERATIONAL PARAMETERS

PARAMETER	
PRIMARY MODE	DYNAMIC
SECONDARY MODE	NONE
DIS ENTR DETS	NO
DELAY ON DOWN	01.0
REV DET ENABLE	NO
DYNAMIC EGCT	000
TIMED EGCT	012
ISLAND INHIBIT TIME	015
XR DET DISABLE	YES
BIDIR DELAY	04.0
DYN ENTRANCE MONITOR	YES
ENTRANCE DOWN REQ	YES
EXIT UP REQ	NO
EGH SENSE	B12 HOLDS
ISL 2 ENABLE	NO
DUAL EGMS ENABLED	NO

EGMS AUX OUTPUT MAPPING

PARAMETER	
AUX OUT 1 FUNCTION	DET XRISL
AUX OUT 1 SOURCE	BOTH
AUX OUT 2 FUNCTION	DET HLTH
AUX OUT 2 SOURCE	BOTH
AUX OUT 3 FUNCTION	GP
AUX OUT 3 SOURCE	BOTH
AUX OUT 4 FUNCTION	DET OBSTL
AUX OUT 4 SOURCE	BOTH

GATE PARAMETERS

GATE	1(A)	2(B)	3(C)	4(D)	5(E)	6(F)	7(G)	8(H)
GATE TYPE	ENTRANCE	ENTRANCE	EXIT	EXIT	NONE*	NONE*	NONE*	NONE*
GATE DIRECTION	↓E	↑W	↓E	↑W	↓S	↓S	↓S	↓S
VERTICAL CHATTER TIME	01.0	01.0	01.0	01.0	02.0	02.0	02.0	02.0
HORIZONTAL CHATTER TIME	01.0	01.0	01.0	01.0	02.0	02.0	02.0	02.0
MINIMUM ASCENT TIME	003	003	003	003	003	003	003	003
MAXIMUM ASCENT TIME	015	015	015	015	015	015	015	015
MINIMUM DESCENT TIME	003	003	003	003	003	003	003	003
MAXIMUM DESCENT TIME	015	015	015	015	015	015	015	015

* GATE TYPE = "NONE" ALL OTHER PARAMETERS IGNORED

DETECTOR PARAMETERS

	(1) E-1400				(2) E-1400				(3) E-1400				(4) E-1400			
DETECTOR	1	2	3	4	5	6	7	8	9	10	11	12	13	14	15	16
DETECTOR TYPE	ENTR	ENTR	EXIT	EXIT	ENTR	ENTR	EXIT	EXIT	NONE	NONE	NONE	NONE	NONE	NONE	NONE	NONE
DETECTOR DIRECTION	↓E	↑W	↓E	↑W	↓E	↑W	↓E	↑W	↓S	↓S	↓S	↓S	↓S	↓S	↓S	↓S
STRETCH TIME*	01.0	01.0	01.0	01.0	01.0	01.0	01.0	01.0	01.0	01.0	01.0	01.0	01.0	01.0	01.0	01.0
LONG-TERM OBSTRUCTION	001	001	001	001	001	001	001	001	000	000	000	000	000	000	000	000
DISABLE ON DOWN	NO	NO	NO	NO	NO	NO	NO	NO	NO	NO	NO	NO	NO	NO	NO	NO
AUX OUTPUT 1	YES	YES	YES	YES	YES	YES	YES	YES	YES	YES	YES	YES	YES	YES	YES	YES
AUX OUTPUT 2	YES	YES	YES	YES	YES	YES	YES	YES	YES	YES	YES	YES	YES	YES	YES	YES
AUX OUTPUT 3	YES	YES	YES	YES	YES	YES	YES	YES	YES	YES	YES	YES	YES	YES	YES	YES
AUX OUTPUT 4	YES	YES	YES	YES	YES	YES	YES	YES	YES	YES	YES	YES	YES	YES	YES	YES

* INCREASE STRETCH TIME AS NECESSARY TO MAINTAIN VEHICLE DETECTION FROM LOOP TO LOOP.
** DETECTORS 5 - 16 DEFAULT TO "NONE" AND MUST BE CONFIGURED MANUALLY
DETECTORS 5 & 6 DEFAULT TO "INT" WHEN 2TK DEFAULT CONFIGURATION IS SELECTED.
WHEN DETECTOR TYPE IS "NONE", ALL OTHER PARAMETERS IGNORED.

NEW SHEET

Designed: 09/27/12
TIER 1S PHASE 1
M.P. 239.70 TO M.P. 255.35 TO UPGRADE XING TO 4 QUAD WITH EGMS, VARIOUS C.P.'S.
Rec*: WO*: 10804
1S: NBT/ / /NST/MJF

MODIFICATION LEVEL	
O. A. LAST LEVEL CHECKED	DU
LAST LEVEL MOD THIS TYPICAL	DU
LAST LEVEL BY DESIGNER	DU
CHANGED FROM TYPICAL?	Y

REV 01.24.11 4K 2TKEGMS.8

CIRCUIT MODIFICATIONS ARE NOT TO BE MADE WITHOUT AUTHORITY FROM THE OFFICE OF SIGNAL DESIGN

Date: 09/27/12
Des: NST
Chk: NBT
AFE: 10804

UNION PACIFIC RAILROAD
ALTON, ILLINOIS
WASHINGTON STREET
SPRINGFIELD SUBDIVISION
Office of AVP Engineering - Signal Omaha, Nebraska

Sh.: 8
DOT 294431D
MP: 255.63
ID: CSL25563.8X

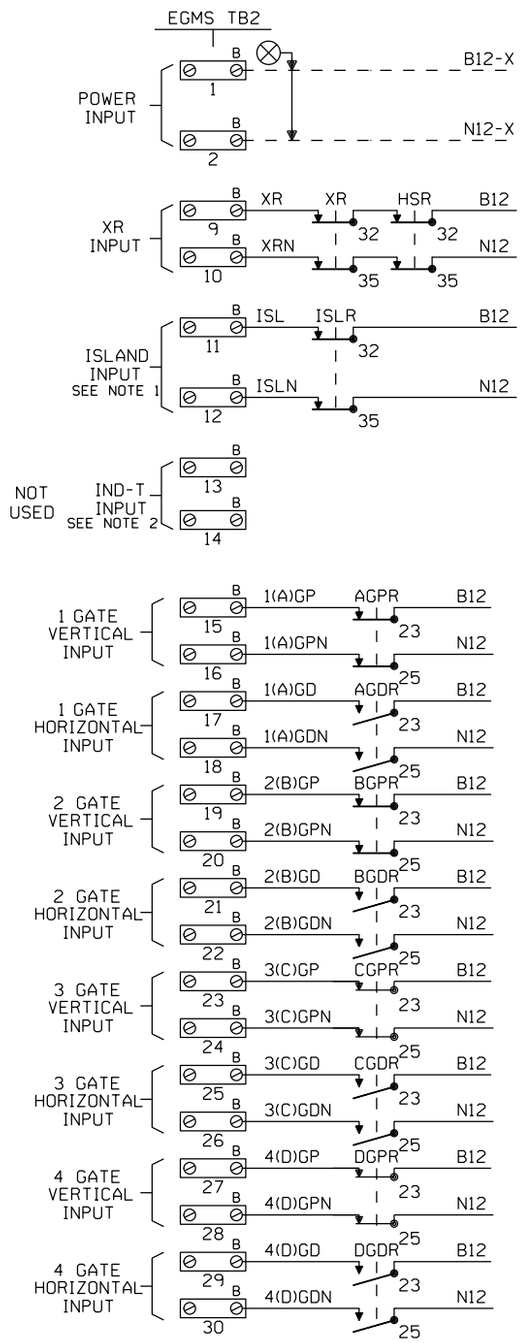

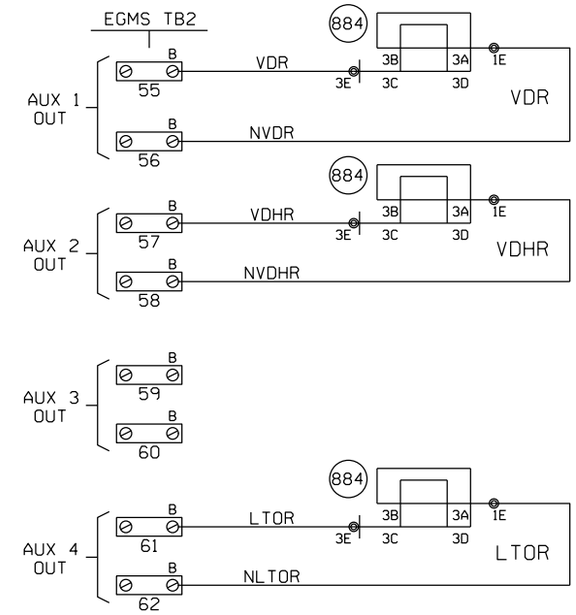

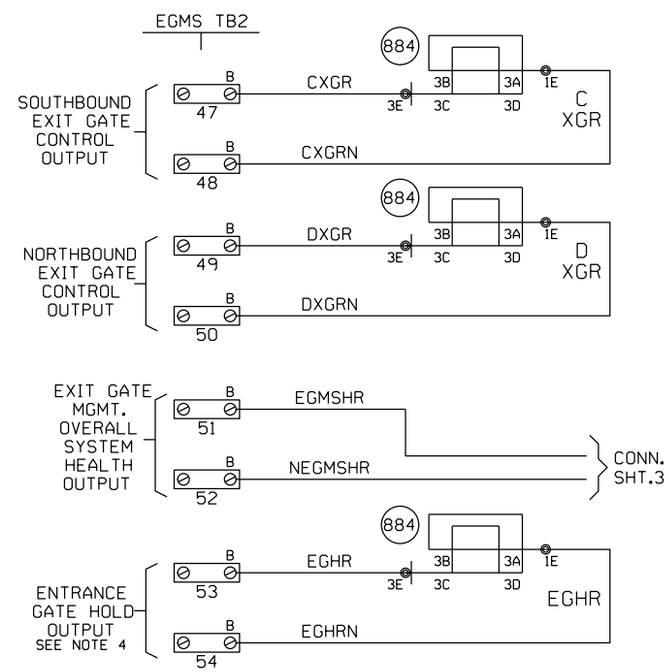

NOTES

1. EGMS ISL1 INPUT: "AND" ISLAND INPUTS FROM ALL TRACKS. NOTE THAT WHEN THIS INPUT IS DE-ENERGIZED THE XR INPUT ON TB2, 9 & 10 MUST ALSO BE DE-ENERGIZED BEFORE THE EXIT GATES MAY BE DRIVEN DOWN.
2. EGMS ISL2 INPUT: MAY BE USED FOR STAND ALONE ISLAND INPUT. THIS INPUT IS NOT DEPENDENT UPON THE STATUS OF XR INPUT ON TB2, 9 & 10. THIS INPUT MUST BE FIELD SELECTED AND ENABLED DURING EGMS SETUP.
3. ALL WIRING TO EGMS TO BE #16 AWG FLEX.
4. ENTRANCE GATE HOLD (EGH) CAN BE PROGRAMMED AS A NORMALLY ENERGIZED OR NORMALLY DE-ENERGIZED OUTPUT.

NEW SHEET

Designed: 09/27/12
TIER 1S PHASE 1 M.P. 239.70 TO M.P. 255.35 TO UPGRADE XING TO 4 QUAD WITH EGMS, VARIOUS C.P.'S
Rec*: WO*: 10804
IS: NBT/ / NST/MJF

MODIFICATION LEVEL	
O. A. LAST LEVEL CHECKED	DU
LAST LEVEL MOD THIS TYPICAL	DU
LAST LEVEL BY DESIGNER	DU
CHANGED FROM TYPICAL?	Y

REV 01.24.11 4K 2TKEGMS.8A

CIRCUIT MODIFICATIONS ARE NOT TO BE MADE WITHOUT AUTHORITY FROM THE OFFICE OF SIGNAL DESIGN

Date: 09/27/12
Des: NST
Chk: NBT
AFE: 10804

UNION PACIFIC RAILROAD
ALTON, ILLINOIS
WASHINGTON STREET
SPRINGFIELD SUBDIVISION
Office of AVP Engineering - Signal Omaha, Nebraska

Sh.: 8A
DOT 294431D
MP: 255.63
ID: CSL25563.8AX

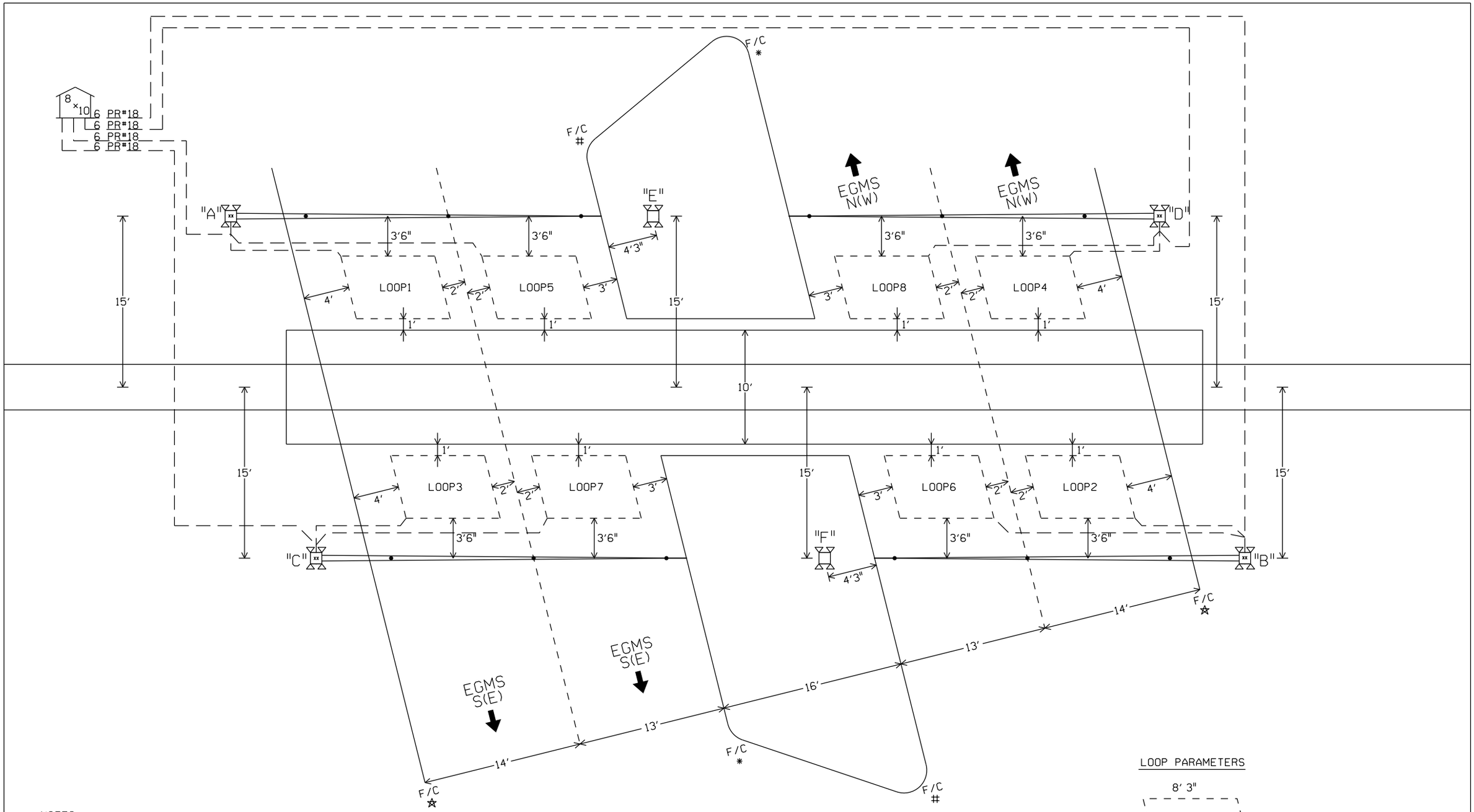

NOTES:

1. DIMENSIONS ON THIS PAGE ARE SHOWN TO PROVIDE GUIDANCE FOR CONSTRUCTION CREWS AND FUTURE MAINTENANCE REPAIRS.
2. REFER TO SAFETRAN EGMS STANDARDS AND RECOMENDED PRACTICES FOR LOOP LAYOUT DESIGN DETAILS.
3. SAFETRAN EGMS JUNCTION BOX INSTALLED ON TOP OF EACH FOUNDATION.
4. INSTALL SAFETRAN 6 PAIR #18 CABLE FROM JUNCTION BOX TO BUNGALOW.
5. ☆ = COMBINATION CURB AND GUTTER TYPE B-6.24
6. # = COMBINATION CURB AND GUTTER TYPE B-6.12
7. * = COMBINATION CURB AND GUTTER TYPE M-4.12
8. F/C = FACE OF CURB

LOOP PARAMETERS

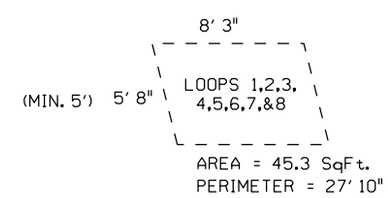

LOOP SIZES

LOOP #	LOOP PERIMETER	LOOP LEAD-IN	PART #
1	28'	25'	PLC-28-25
2	28'	25'	PLC-28-25
3	28'	25'	PLC-28-25
4	28'	25'	PLC-28-25
5	28'	25'	PLC-28-25
6	28'	25'	PLC-28-25
7	28'	25'	PLC-28-25
8	28'	25'	PLC-28-25

℄ +

LOOP PLACEMENT SKETCH

NOT TO SCALE

NEW SHEET

Designed: 09/27/12
TIER 1S PHASE 1 M.P. 239.70 TO M.P. 255.35 TO UPGRADE XING TO 4 QUAD WITH EGMS, VARIOUS C.P.'S
Rec#: WO#: 10804
1S: NBT/ / NST/MJF

MODIFICATION LEVEL	
O. A. LAST LEVEL CHECKED	DU
LAST LEVEL MOD THIS TYPICAL	DU
LAST LEVEL BY DESIGNER	DU
CHANGED FROM TYPICAL?	Y

REV 01.24.11 4K 2TKEGMS.8B

CIRCUIT MODIFICATIONS ARE NOT TO BE MADE WITHOUT AUTHORITY FROM THE OFFICE OF SIGNAL DESIGN

Date: 09/27/12
Des: NST
Chk: NBT
AFE: 10804

UNION PACIFIC RAILROAD

ALTON, ILLINOIS
WASHINGTON STREET
SPRINGFIELD SUBDIVISION

Office of AVP Engineering - Signal Omaha, Nebraska

Sh.: 8B
DOT 294431D
MP: 255.63
ID: CSL25563.8BX

(1) E-1400 SETUP PARAMETERS

FUNCTION	CH. 1	CH. 2	CH. 3	CH. 4
FREQUENCY SETTING	2	4	6	8
SENSITIVIY SETTING	6•	6•	6•	6•
OPTION 1 (TEMP L DISPLAY)	OFF			
OPTION 2 (TEMP ΔL/L DISPLAY)	OFF			
OPTION 3 (NOISE FILTER)	3.00	3.00	3.00	3.00
OPTION 4 (TRACKING)	4.02	4.02	4.02	4.02
OPTION 5 (SENSITIVITY BOOST)	5.00	5.00	5.00	5.00
OPTION 6 (TEMP AUDIBLE SIGNAL)	OFF	OFF	OFF	OFF
CHECKLOOP INTERVAL	005	005	005	005
DETECTOR ID	000			
OPTION 7 (DETECTOR SYNC)	7.01			
OPTION 8 (ISL OPTION)	OFF			
OPTION 9 (SHUNT ENHANCEMENT SE)	OFF	OFF	OFF	OFF
MAIN VITAL OUTPUT DELAY	00.0	00.0	00.0	00.0
MAIN VITAL OUTPUT EXTENSION	00.0	00.0	00.0	00.0
MAIN VITAL OUTPUT MAPPING	10	20	40	80
AUX VITAL OUTPUT MAPPING	001	002	004	008
LOOP FREQUENCY (Khz)				
LOOP INDUCTANCE (MICRO HENRIES)				

SOFTWARE VERSION 4.02
• FIELD VERIFY

(2) E-1400 SETUP PARAMETERS

FUNCTION	CH. 1	CH. 2	CH. 3	CH. 4
FREQUENCY SETTING	2	4	6	8
SENSITIVIY SETTING	6•	6•	6•	6•
OPTION 1 (TEMP L DISPLAY)	OFF			
OPTION 2 (TEMP ΔL/L DISPLAY)	OFF			
OPTION 3 (NOISE FILTER)	3.00	3.00	3.00	3.00
OPTION 4 (TRACKING)	4.02	4.02	4.02	4.02
OPTION 5 (SENSITIVITY BOOST)	5.00	5.00	5.00	5.00
OPTION 6 (TEMP AUDIBLE SIGNAL)	OFF	OFF	OFF	OFF
CHECKLOOP INTERVAL	005	005	005	005
DETECTOR ID	001			
OPTION 7 (DETECTOR SYNC)	7.01			
OPTION 8 (ISL OPTION)	OFF			
OPTION 9 (SHUNT ENHANCEMENT SE)	OFF	OFF	OFF	OFF
MAIN VITAL OUTPUT DELAY	00.0	00.0	00.0	00.0
MAIN VITAL OUTPUT EXTENSION	00.0	00.0	00.0	00.0
MAIN VITAL OUTPUT MAPPING	10	20	40	80
AUX VITAL OUTPUT MAPPING	001	002	004	008
LOOP FREQUENCY (Khz)				
LOOP INDUCTANCE (MICRO HENRIES)				

SOFTWARE VERSION 4.02
• FIELD VERIFY

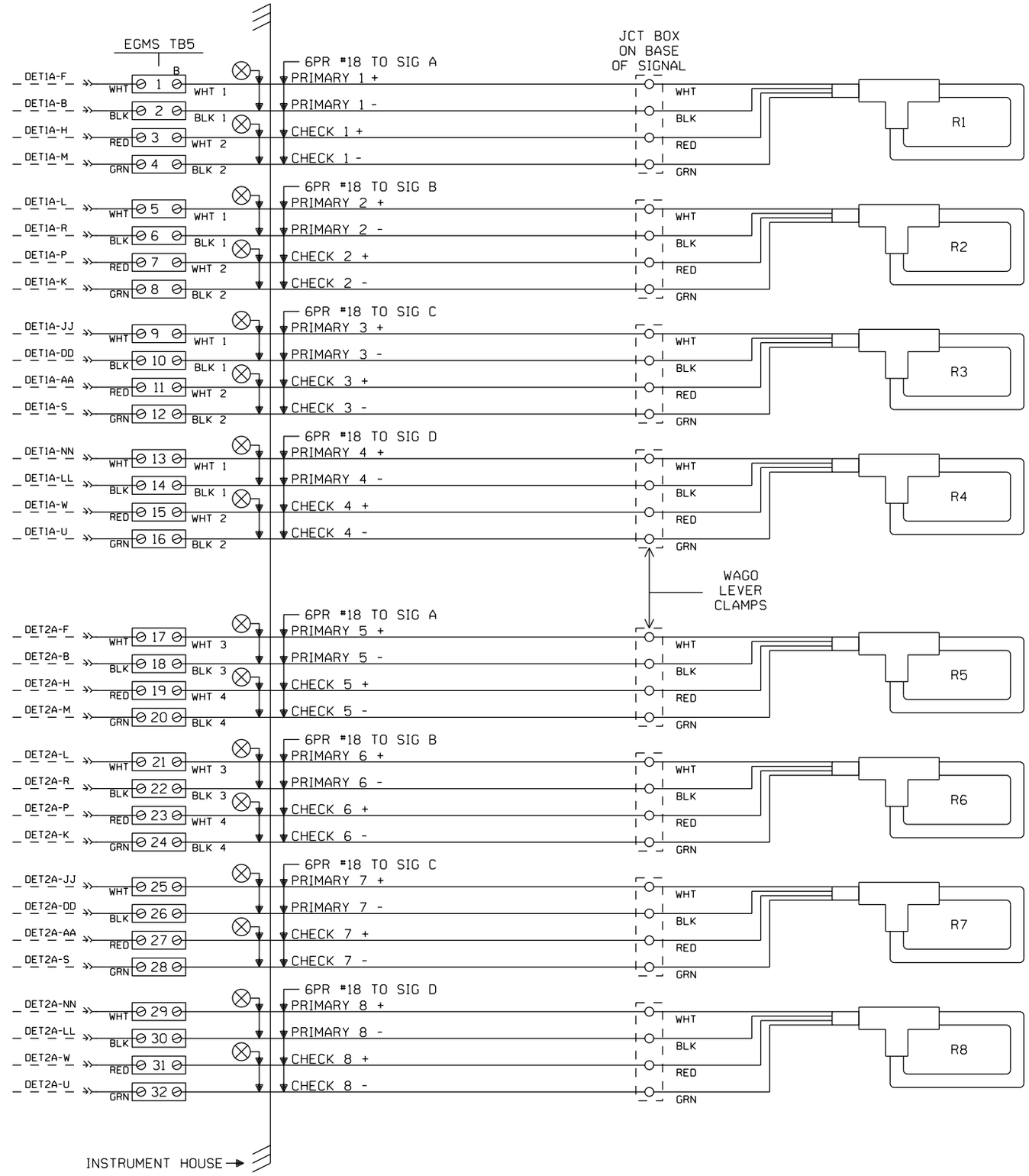

CABLE TABULATION

CABLE NO. (13) 6/PR #18 U.G.C. TO JCT BOX ON BASE OF GATE "A" (RCL PART #03-094-005)
CABLE NO. (14) 6/PR #18 U.G.C. TO JCT BOX ON BASE OF GATE "B" (RCL PART #03-094-005)
CABLE NO. (15) 6/PR #18 U.G.C. TO JCT BOX ON BASE OF GATE "C" (RCL PART #03-094-005)
CABLE NO. (16) 6/PR #18 U.G.C. TO JCT BOX ON BASE OF GATE "D" (RCL PART #03-094-005)

NEW SHEET

Designed: 09/27/12
TIER 1S PHASE 1 M.P. 239.70 TO M.P. 255.35 TO UPGRADE XING TO 4 QUAD WITH EGMS, VARIOUS C.P.'S.
Rec*: NBT/ WO*: 10804
1S: / /NST/MJF

MODIFICATION LEVEL	
O.A. LAST LEVEL CHECKED	DU
LAST LEVEL MOD THIS TYPICAL	DU
LAST LEVEL BY DESIGNER	DU
CHANGED FROM TYPICAL?	Y

REV 01.24.11 4K 2TKEGMS.9

CIRCUIT MODIFICATIONS ARE NOT TO BE MADE WITHOUT AUTHORITY FROM THE OFFICE OF SIGNAL DESIGN

Date: 09/27/12
Des: NST
Chk: NBT
AFE: 10804

UNION PACIFIC RAILROAD
ALTON, ILLINOIS
WASHINGTON STREET
SPRINGFIELD SUBDIVISION
Office of AVP Engineering - Signal Omaha, Nebraska

Sh.: 9
DOT 294431D
MP: 255.63
ID: CSL25563.9X

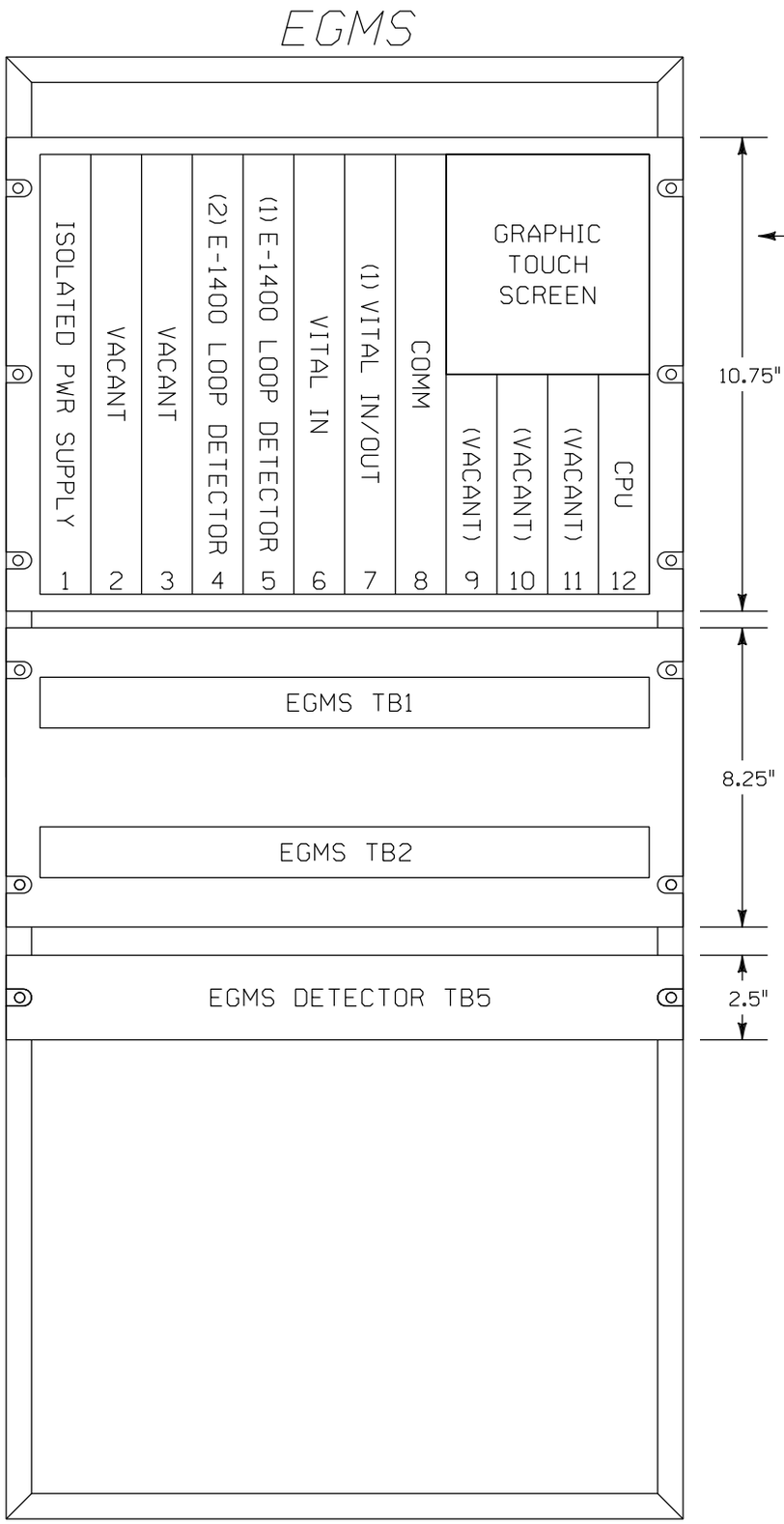

EGMS TB4
(ON BACK)

E-1400 SYNC WIRING DETAIL FOR (2) DETECTOR MODULES

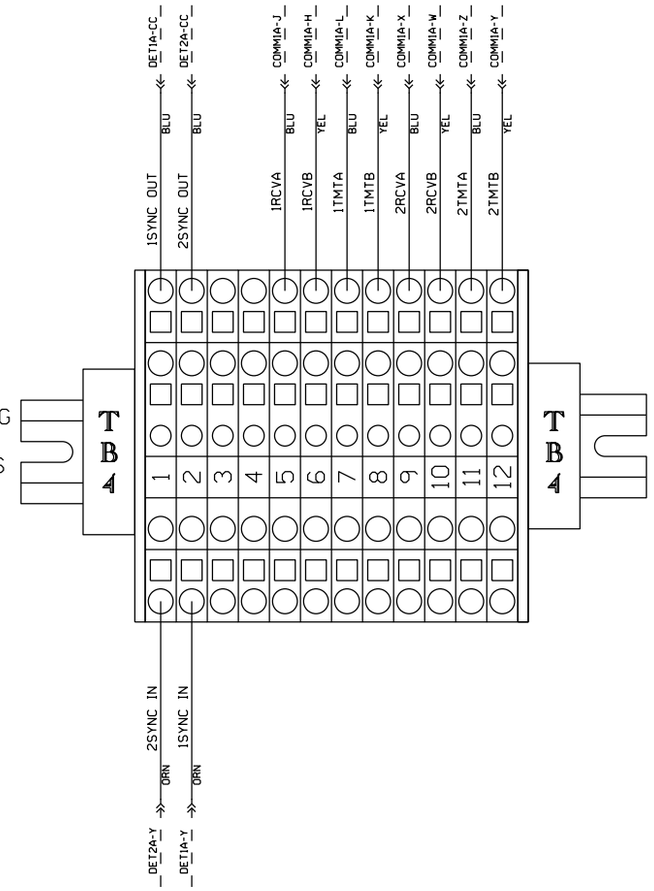

NEW SHEET

Designed: 09/27/12

TIER 1S PHASE 1 M.P. 239.70 TO M.P. 255.35 TO UPGRADE XING TO 4 QUAD WITH EGMS, VARIOUS C.P.'S.

Rec*: WO*: 10804
IS: NBT/ /NST/MJF

MODIFICATION LEVEL	
O. A. LAST LEVEL CHECKED	DU
LAST LEVEL MOD THIS TYPICAL	DU
LAST LEVEL BY DESIGNER	DU
CHANGED FROM TYPICAL?	Y

REV 01.24.11 4K 2TKEGMS.9B

CIRCUIT MODIFICATIONS ARE NOT TO BE MADE WITHOUT AUTHORITY FROM THE OFFICE OF SIGNAL DESIGN

Date: 09/27/12
Des: NST
Chk: NBT
AFE: 10804

UNION PACIFIC RAILROAD

ALTON, ILLINOIS
WASHINGTON STREET
SPRINGFIELD SUBDIVISION

Office of AVP Engineering - Signal Omaha, Nebraska

Sh.: 9A
DOT 294431D
MP: 255.63
ID: CSL25563.9AX

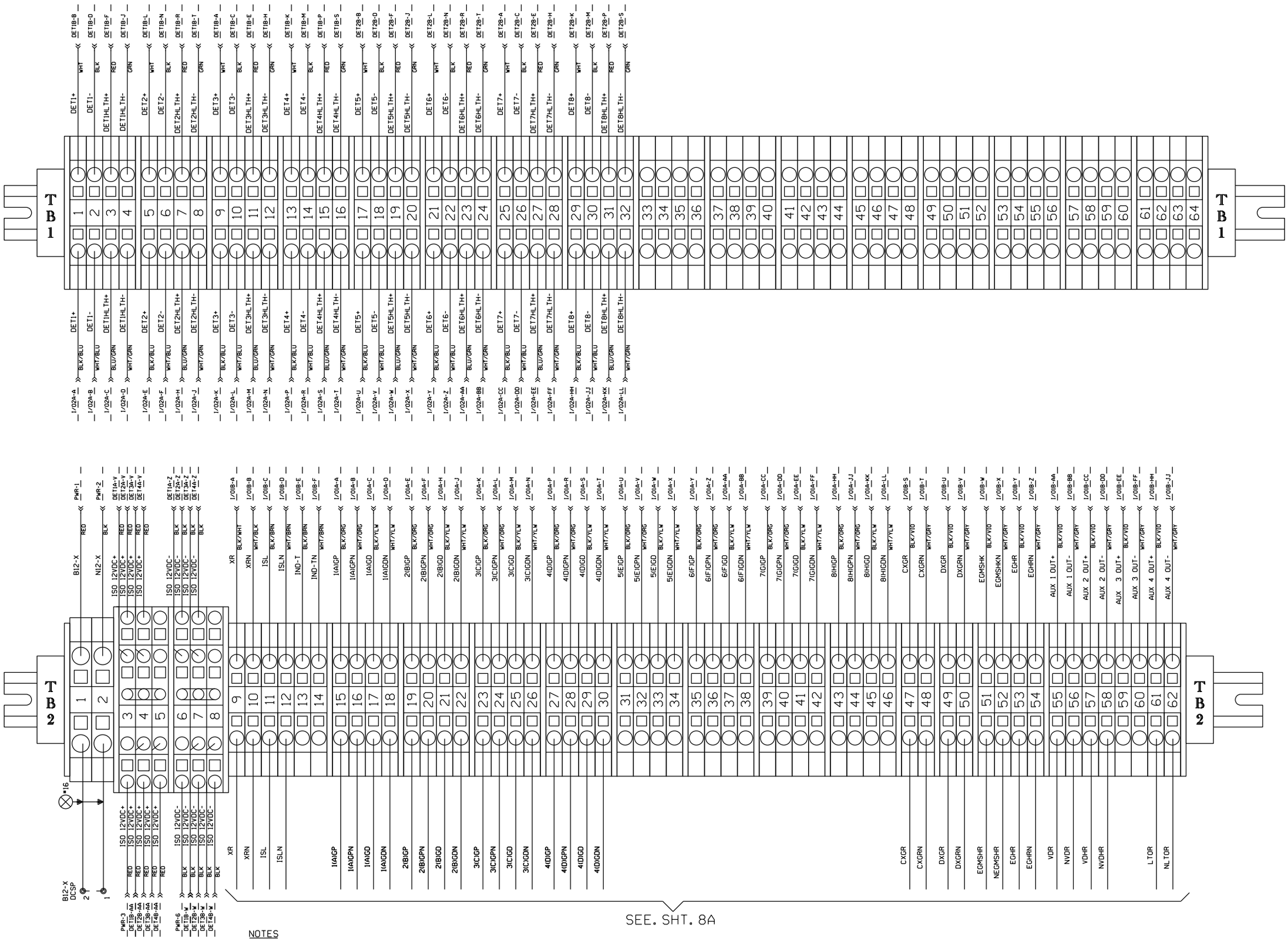

NOTES

1. TB1 PROVIDES AN EXTERNAL PASS THROUGH BETWEEN THE E-1400 MODULES AND THE VITAL INPUT MODULE IN CHASSIS POSITION 6. EGMS OR EGMS+ UNITS CONFIGURED FOR LESS THAN 4 EACH E-1400 MODULES WILL ONLY BE WIRED AS REQUIRED.
2. TB2-3 THROUGH TB2-8 PROVIDE A CONNECTION BUS FOR INTERNAL SUPPLY VOLTAGES AND MUST NOT BE USED TO SUPPLY OTHER CIRCUITS.

NEW SHEET

Designed: 09/27/12
TIER IS PHASE 1 M.P. 239.70 TO M.P. 255.35 TO UPGRADE XING TO 4 QUAD WITH EGMS, VARIOUS C.P.'S
Rec#: WO#: 10804
IS: NBT/ / /NST/MJF

MODIFICATION LEVEL	
Q. A. LAST LEVEL CHECKED	DU
LAST LEVEL MOD THIS TYPICAL	DU
LAST LEVEL BY DESIGNER	DU
CHANGED FROM TYPICAL?	Y

REV 01.24.11 4K 2TKEGMS.9C

CIRCUIT MODIFICATIONS ARE NOT TO BE MADE WITHOUT AUTHORITY FROM THE OFFICE OF SIGNAL DESIGN

Date: 09/27/12
Des: NST
Chk: NBT
AFE: 10804

UNION PACIFIC RAILROAD
ALTON, ILLINOIS
WASHINGTON STREET
SPRINGFIELD SUBDIVISION
Office of AVP Engineering - Signal Omaha, Nebraska

Sh.: 9B
DOT 294431D
MP: 255.63
ID: CSL25563.9BX

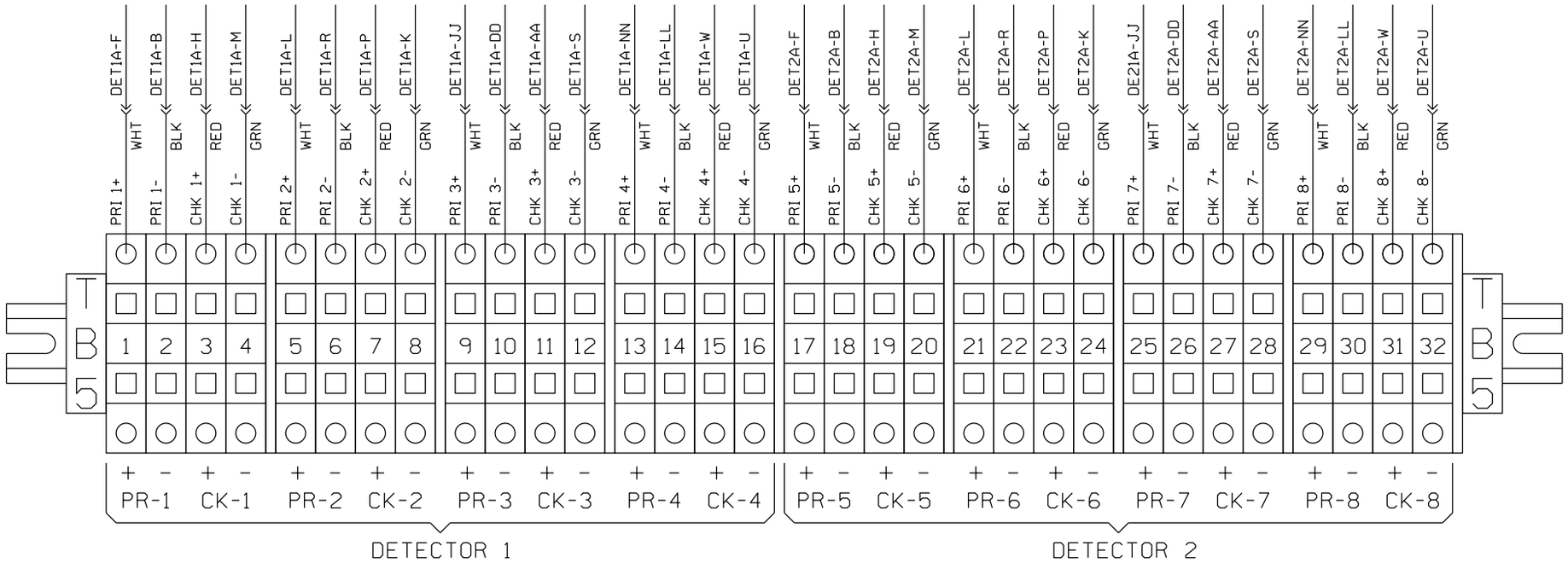

NEW SHEET

					Designed: 09/27/12 TIER 1S PHASE 1 M.P. 239.70 TO M.P. 255.35 TO UPGRADE XING TO 4 QUAD WITH EGMS, VARIOUS C.P.'S Rec#: WO#: 10804 IS: NBT / / NST/MJF	MODIFICATION LEVEL Q. A. LAST LEVEL CHECKED DU LAST LEVEL MOD THIS TYPICAL DU LAST LEVEL BY DESIGNER DU CHANGED FROM TYPICAL? Y REV 01.24.11 4K 2TKEGMS.9D	CIRCUIT MODIFICATIONS ARE NOT TO BE MADE WITHOUT AUTHORITY FROM THE OFFICE OF SIGNAL DESIGN	Date: 09/27/12 Des: NST Chk: NBT AFE: 10804	UNION PACIFIC RAILROAD ALTON, ILLINOIS WASHINGTON STREET SPRINGFIELD SUBDIVISION Office of AVP Engineering - Signal Omaha, Nebraska	Sh.: 9C DOT 294431D MP: 255.63 ID: CSL25563.9CX

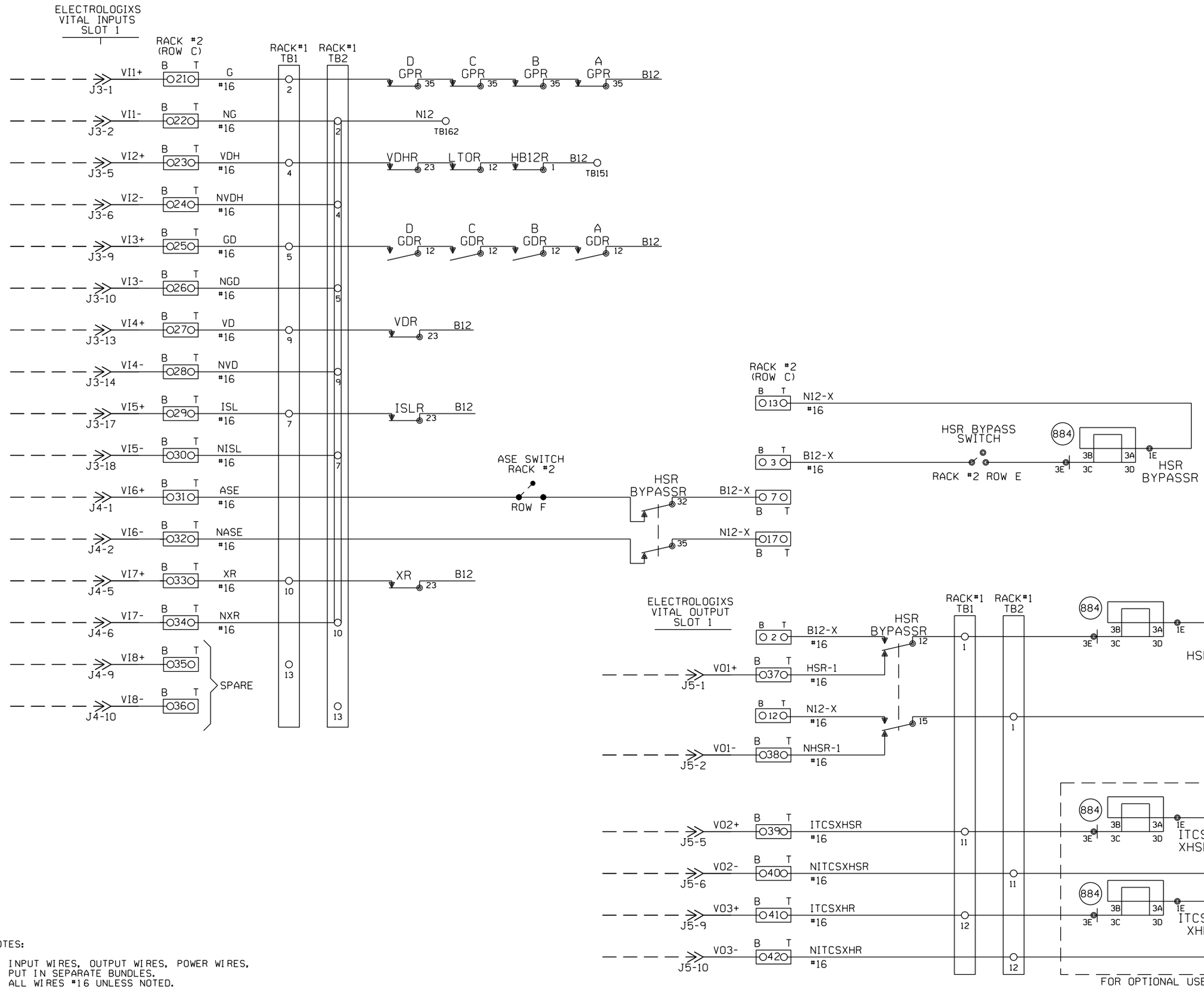

NOTES:

1. INPUT WIRES, OUTPUT WIRES, POWER WIRES, PUT IN SEPARATE BUNDLES.
2. ALL WIRES #16 UNLESS NOTED.
3. O?? O 2 POSITION WAGO BLOCK.

NEW SHEET

Designed: 09/27/12
TIER IS PHASE 1 M.P. 239.70 TO M.P. 255.35 TO UPGRADE XING TO 4 QUAD WITH EGMS, VARIOUS C.P.'S
Rec#: WO#: 10804
IS: NBT/ /NST/MJF

CIRCUIT MODIFICATIONS ARE NOT TO BE MADE WITHOUT AUTHORITY FROM THE OFFICE OF SIGNAL DESIGN

Date: 09/27/12
Des: NST
Chk: NBT
AFE: 10804

UNION PACIFIC RAILROAD
ALTON, ILLINOIS
WASHINGTON STREET
SPRINGFIELD SUBDIVISION
Office of AVP Engineering - Signal Omaha, Nebraska

Sh.: 10
DOT 294431D
MP: 255.63
ID: CSL25563.10X

WIRING NOTE:
WIRE 30' LONG WIRES TO BSA-4

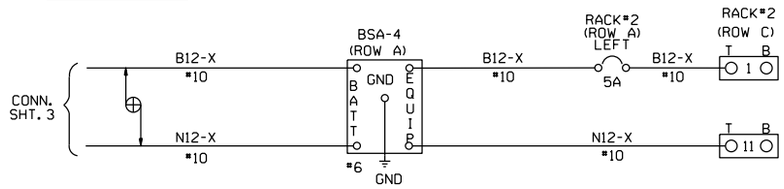

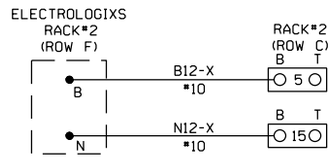

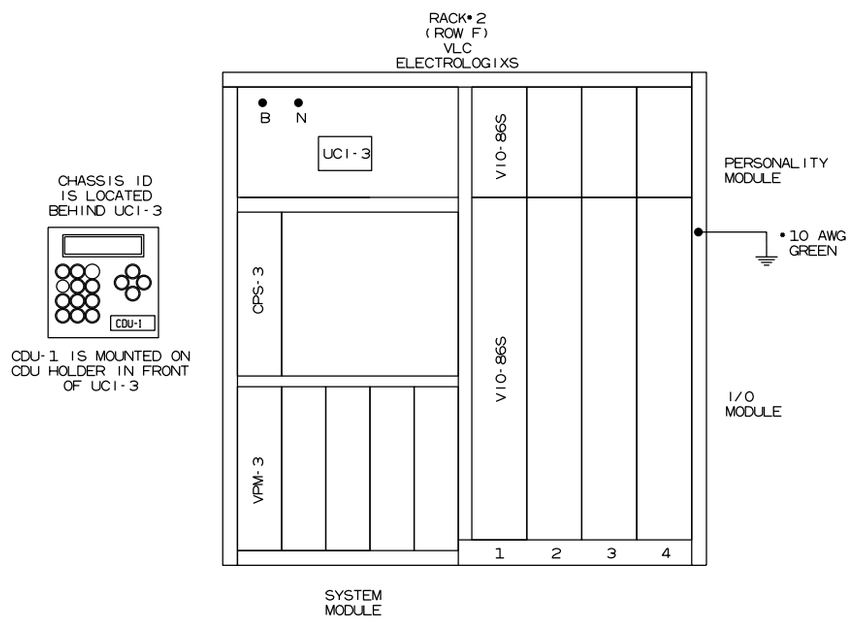

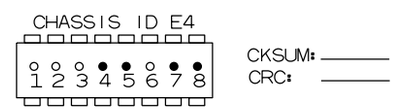

○ = TAB INTACT
● = TAB PUNCHED OUT

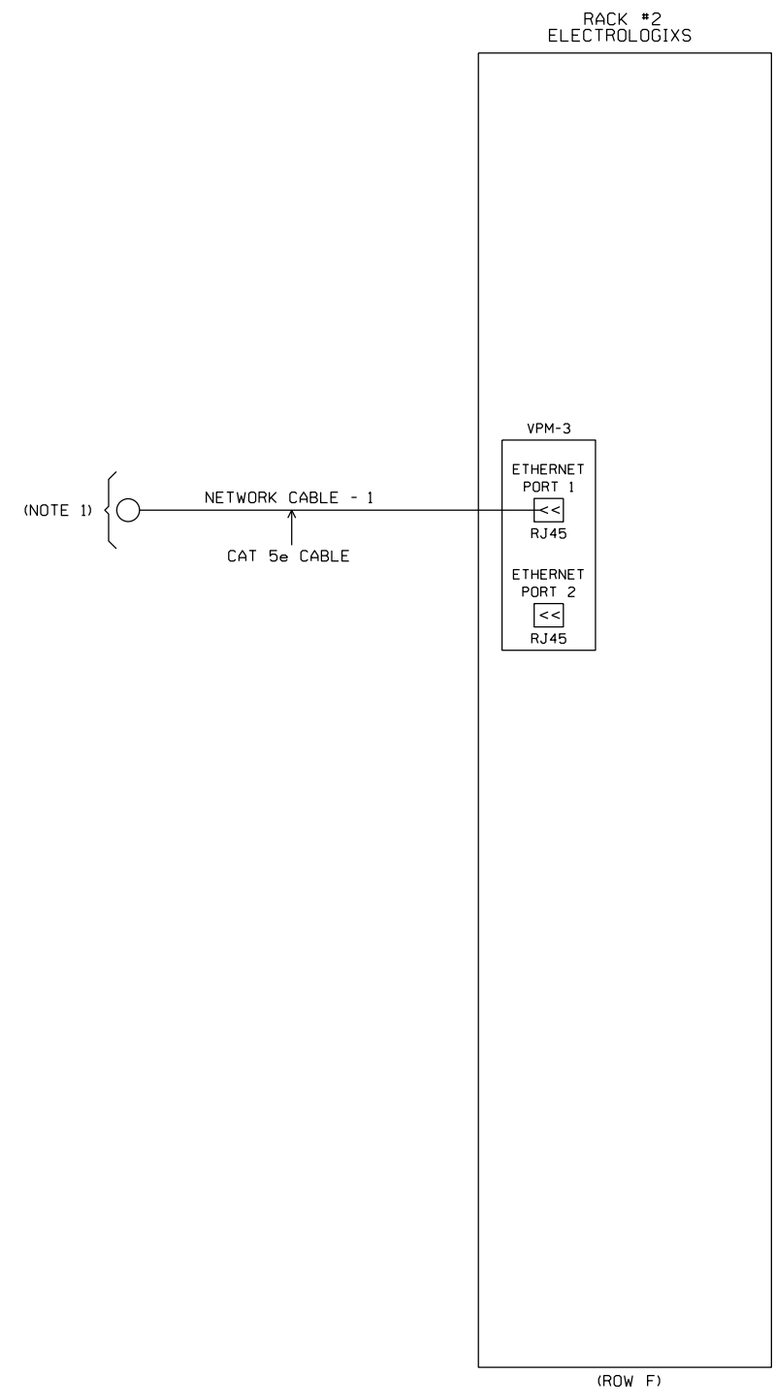

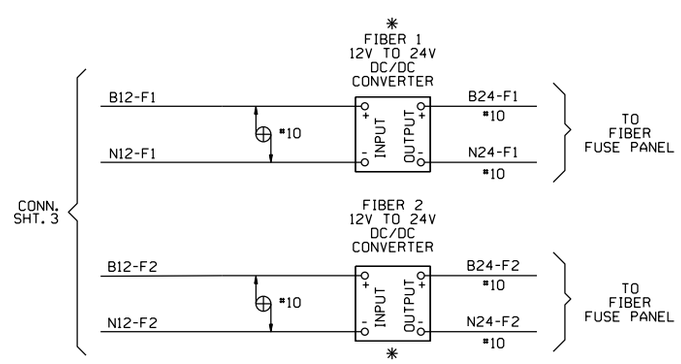

NOTES:

1. NETWORK SWITCH INSTALLED BY RR.

DENOTES TWISTED PAIR

2 POSITION WAGO BLOCK

✳ - TO BE FIELD MOUNTED AFTER IT IS DETERMINED WHERE TO MOUNT.

NEW SHEET

Designed: 09/27/12
TIER IS PHASE 1 M.P. 239.70 TO M.P. 255.35 TO UPGRADE XING TO 4 QUAD WITH EGMS, VARIOUS C.P.'S
Rec#: WO#: 10804
IS: NBT/ /NST/MJF

CIRCUIT MODIFICATIONS ARE NOT TO BE MADE WITHOUT AUTHORITY FROM THE OFFICE OF SIGNAL DESIGN

Date:	09/27/12
Des:	NST
Chk:	NBT
AFE:	10804

UNION PACIFIC RAILROAD
ALTON, ILLINOIS
WASHINGTON STREET
SPRINGFIELD SUBDIVISION
Office of AVP Engineering - Signal — Omaha, Nebraska

Sh.:	10A
DOT	294431D
MP:	255.63
ID:	CSL25563.10AX

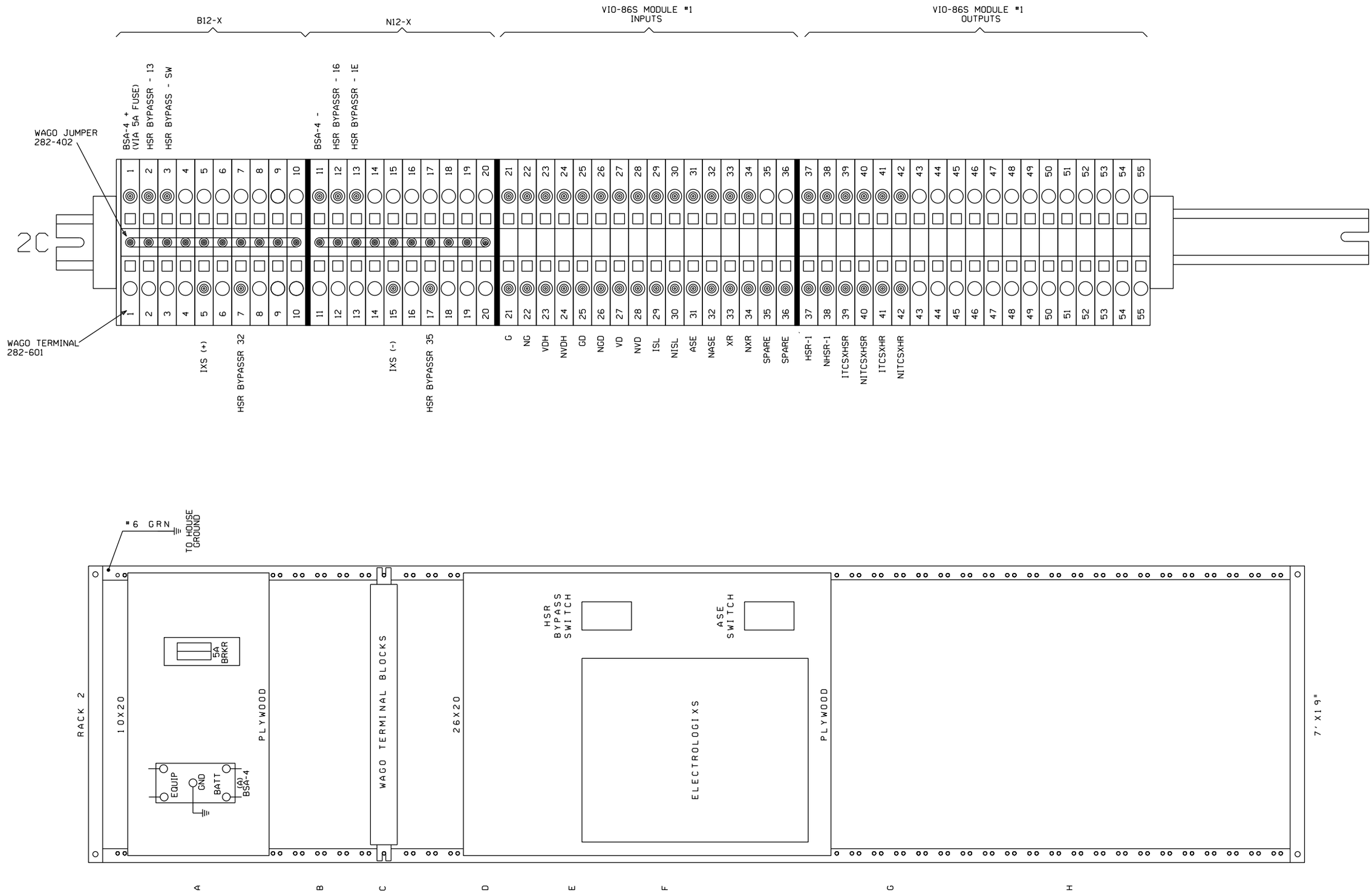

NEW SHEET

Designed: 09/27/12
TIER IS PHASE 1 M.P. 239.70 TO M.P. 255.35 TO UPGRADE XING TO 4 QUAD WITH EGMS, VARIOUS C.P.'S
Rec#: WO#: 10804
IS: NBT/ / /NST/MJF

CIRCUIT MODIFICATIONS ARE NOT TO BE MADE WITHOUT AUTHORITY FROM THE OFFICE OF SIGNAL DESIGN

Date:	09/27/12
Des:	NST
Chk:	NBT
AFE:	10804

UNION PACIFIC RAILROAD

ALTON, ILLINOIS
WASHINGTON STREET
SPRINGFIELD SUBDIVISION

Office of AVP Engineering - Signal Omaha, Nebraska

Sh.:	10B
DOT	294431D
MP:	255.63
ID:	CSL25563.10BX

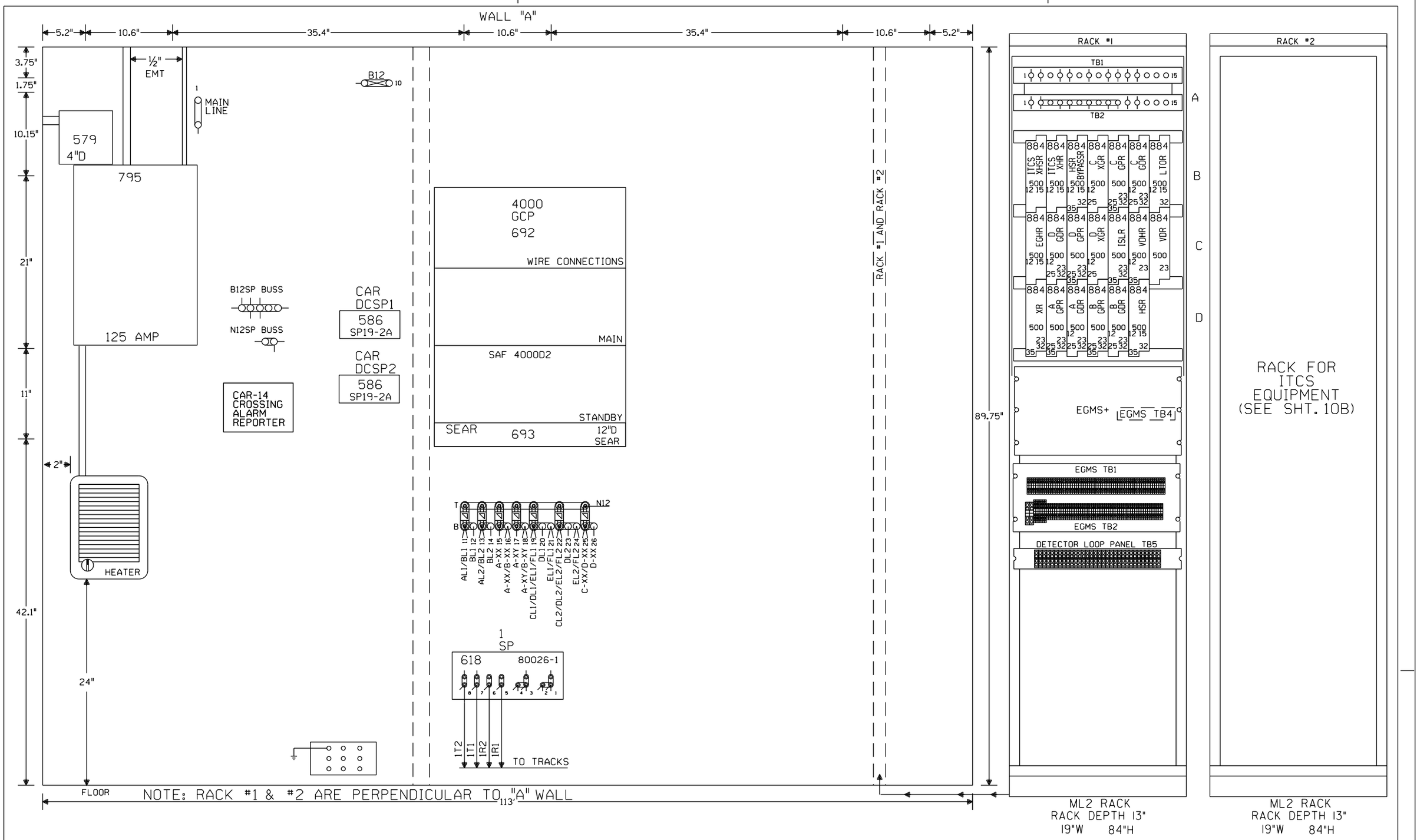

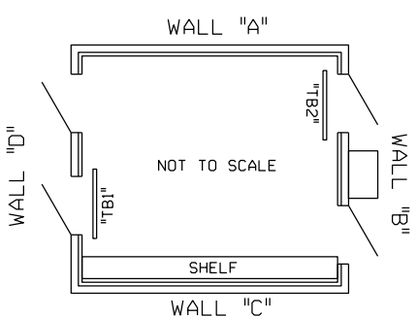

8X10 HOUSE WITH HEATER AND BLOWER U.P. PART#520-2532

NOTE: ALL DIMENSIONS SHOWN ARE APPROXIMATE.

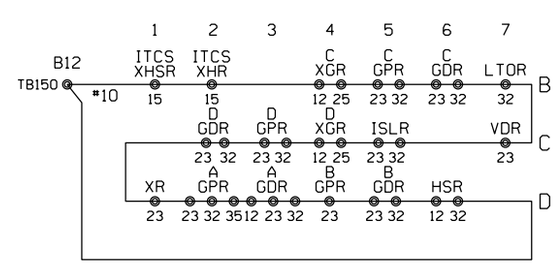

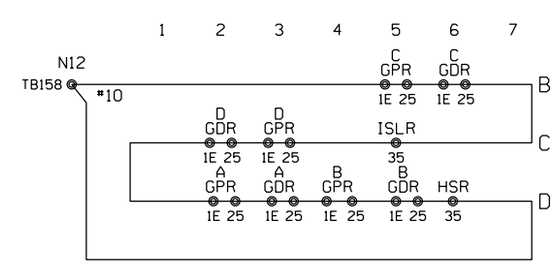

NEW SHEET

							Designed: 09/27/12 TIER IS PHASE 1 M.P. 239.70 TO M.P. 255.35 TO UPGRADE XING TO 4 QUAD WITH EGMS, VARIOUS C.P.'S Rec#: WO#: 10804 IS: NBT / / NST/MJF	CIRCUIT MODIFICATIONS ARE NOT TO BE MADE WITHOUT AUTHORITY FROM THE OFFICE OF SIGNAL DESIGN	Date: 09/27/12 Des: NST Chk: NBT AFE: 10804	UNION PACIFIC RAILROAD ALTON, ILLINOIS WASHINGTON STREET SPRINGFIELD SUBDIVISION Office of AVP Engineering - Signal Omaha, Nebraska	Sh.: 11 DOT 294431D MP: 255.63 ID: CSL25563.11X

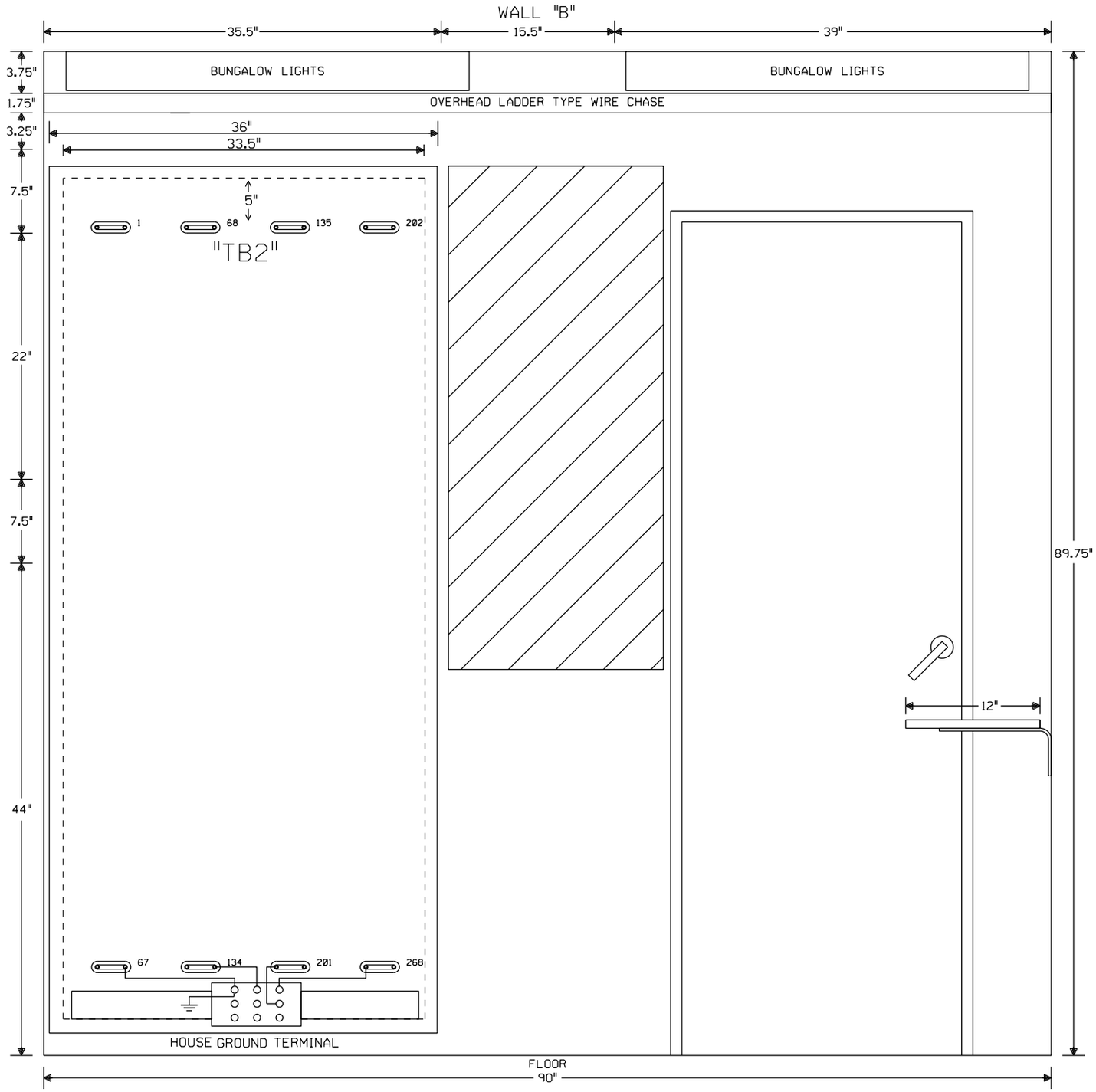

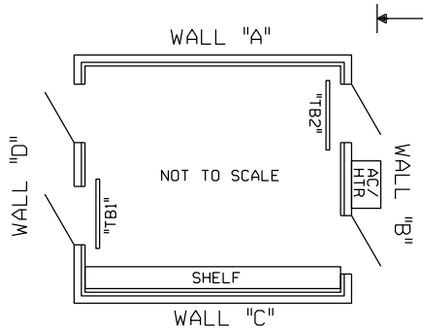

NOTE: ALL DIMENSIONS SHOWN ARE APPROXIMATE.

NOTE: NO TEST LINKS TO BE INSTALLED WITH CROSSING LIGHTING OR GATE MECH CIRCUITRY

NEW SHEET

							Designed: 09/27/12 TIER 1S PHASE 1 M.P. 239.70 TO M.P. 255.35 TO UPGRADE XING TO 4 QUAD WITH EGMS, VARIOUS C.P.'S Rec#: WO#: 10804 IS: NBT / / NST/MJF	CIRCUIT MODIFICATIONS ARE NOT TO BE MADE WITHOUT AUTHORITY FROM THE OFFICE OF SIGNAL DESIGN	Date: 09/27/12 Des: NST Chk: NBT AFE: 10804	UNION PACIFIC RAILROAD ALTON, ILLINOIS WASHINGTON STREET SPRINGFIELD SUBDIVISION Office of AVP Engineering - Signal Omaha, Nebraska	Sh.: 12 DOT 294431D MP: 255.63 ID: CSL25563.12X

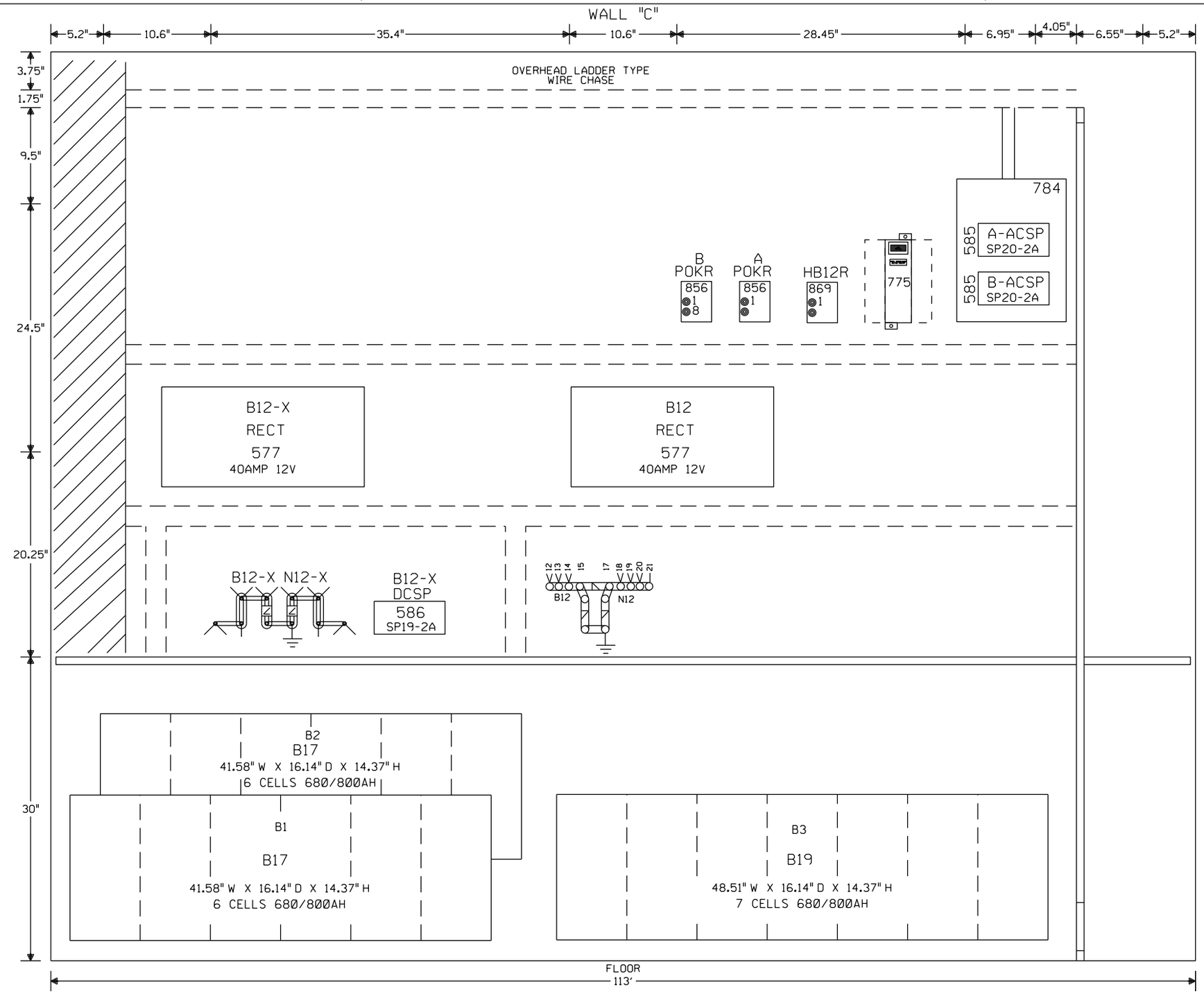

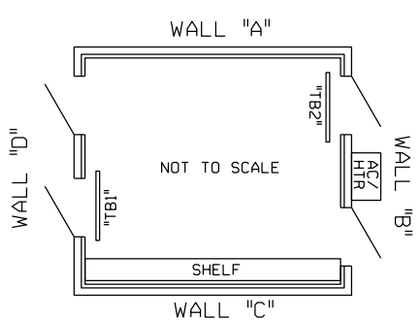

NOTE: ALL DIMENSIONS SHOWN
ARE APPROXIMATE.

NEW SHEET

							Designed: 09/27/12 TIER IS PHASE 1 M.P. 239.70 TO M.P. 255.35 TO UPGRADE XING TO 4 QUAD WITH EGMS, VARIOUS C.P.'S Rec#: WO#: 10804 IS: NBT/ / /NST/MJR	CIRCUIT MODIFICATIONS ARE NOT TO BE MADE WITHOUT AUTHORITY FROM THE OFFICE OF SIGNAL DESIGN	Date: 09/27/12 Des: NST Chk: NBT AFE: 10804	UNION PACIFIC RAILROAD ALTON, ILLINOIS WASHINGTON STREET SPRINGFIELD SUBDIVISION Office of AVP Engineering - Signal Omaha, Nebraska	Sh.: 13 DOT 294431D MP: 255.63 ID: CSL25563.13X

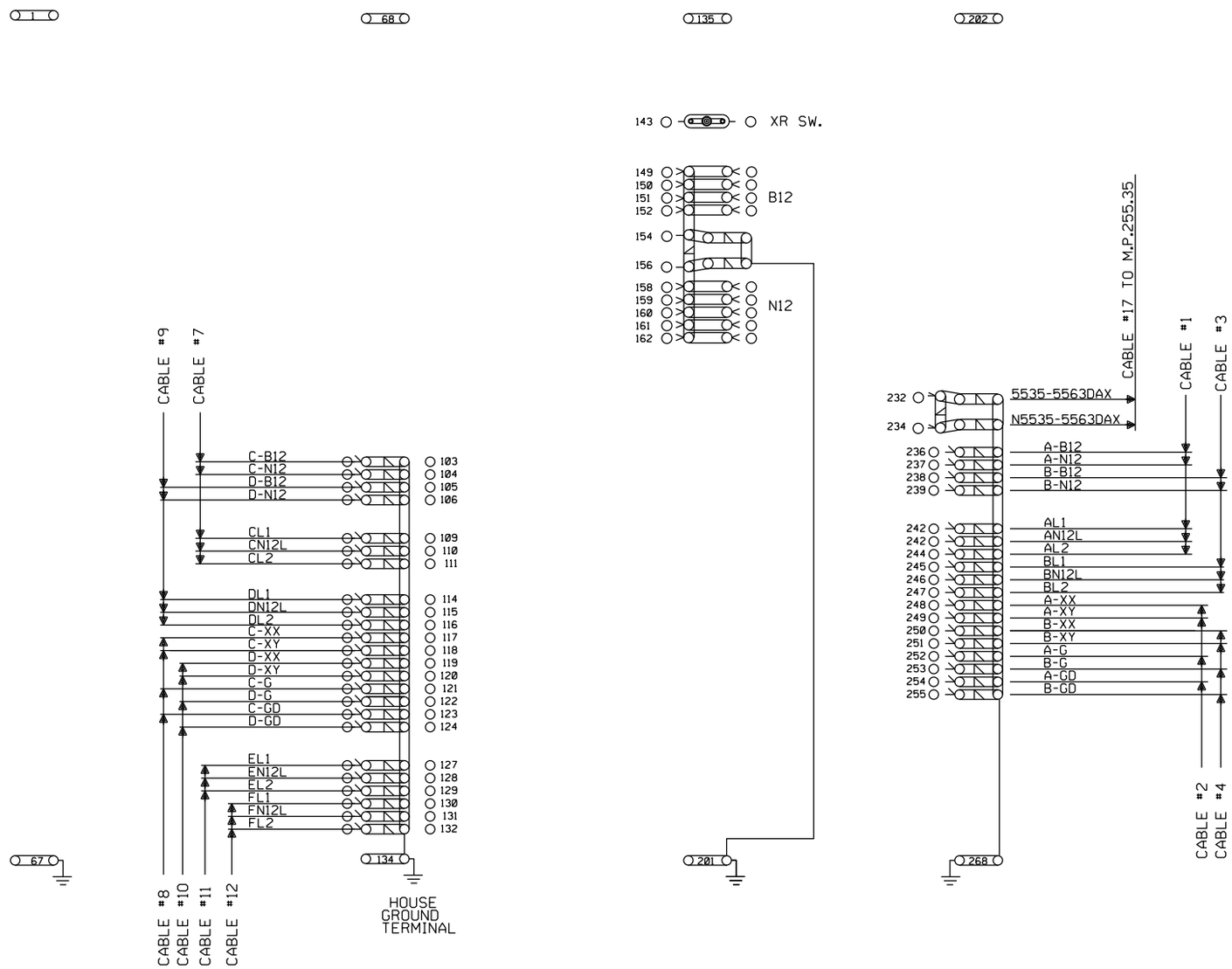

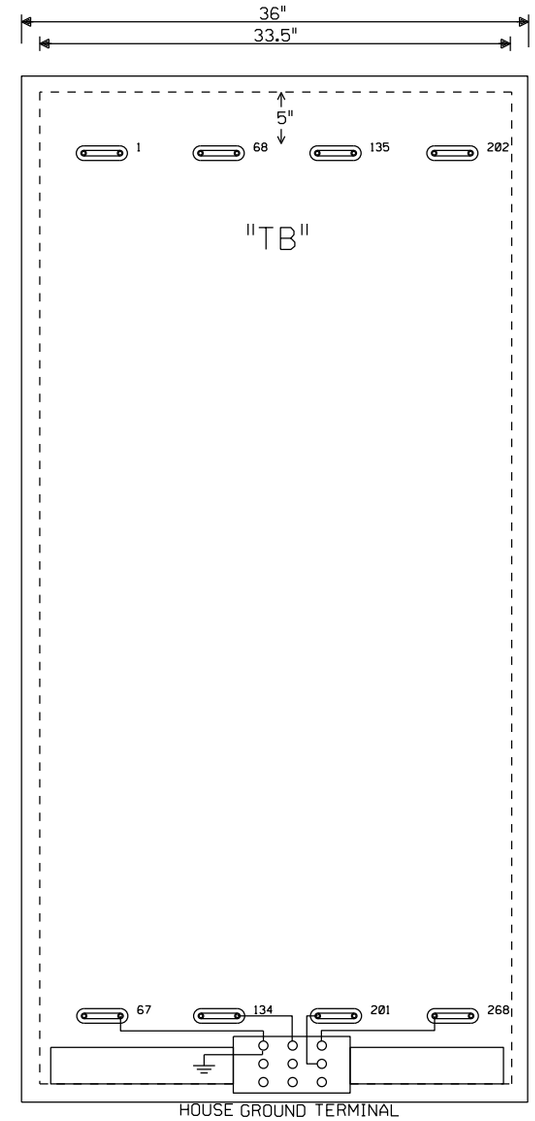

NOTE: NO TEST LINKS TO BE INSTALLED WITH CROSSING LIGHTING OR GATE MECH CIRCUITRY

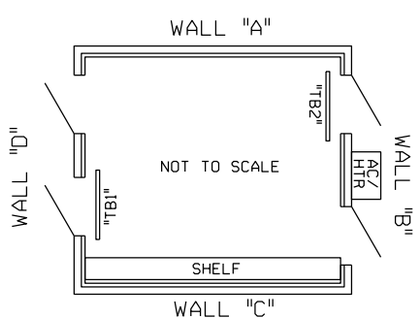

NOTE: ALL DIMENSIONS SHOWN ARE APPROXIMATE.

SEE SIGNAL STANDARD DRAWING 846120UP FOR HOUSE GROUNDING SCHEME

NEW SHEET

							Designed: 09/27/12 TIER 1S PHASE 1 M.P. 239.70 TO M.P. 255.35 TO UPGRADE XING TO 4 QUAD WITH EGMS, VARIOUS C.P.'S Rec*: WO*: 10804 1S: NBT/ / NST/MJR	CIRCUIT MODIFICATIONS ARE NOT TO BE MADE WITHOUT AUTHORITY FROM THE OFFICE OF SIGNAL DESIGN	Date: 09/27/12 Des: NST Chk: NBT AFE: 10804	UNION PACIFIC RAILROAD ALTON, ILLINOIS WASHINGTON STREET SPRINGFIELD SUBDIVISION Office of AVP Engineering - Signal Omaha, Nebraska	Sh.: 14 DOT 294431D MP: 255.63 ID: CSL25563.14X