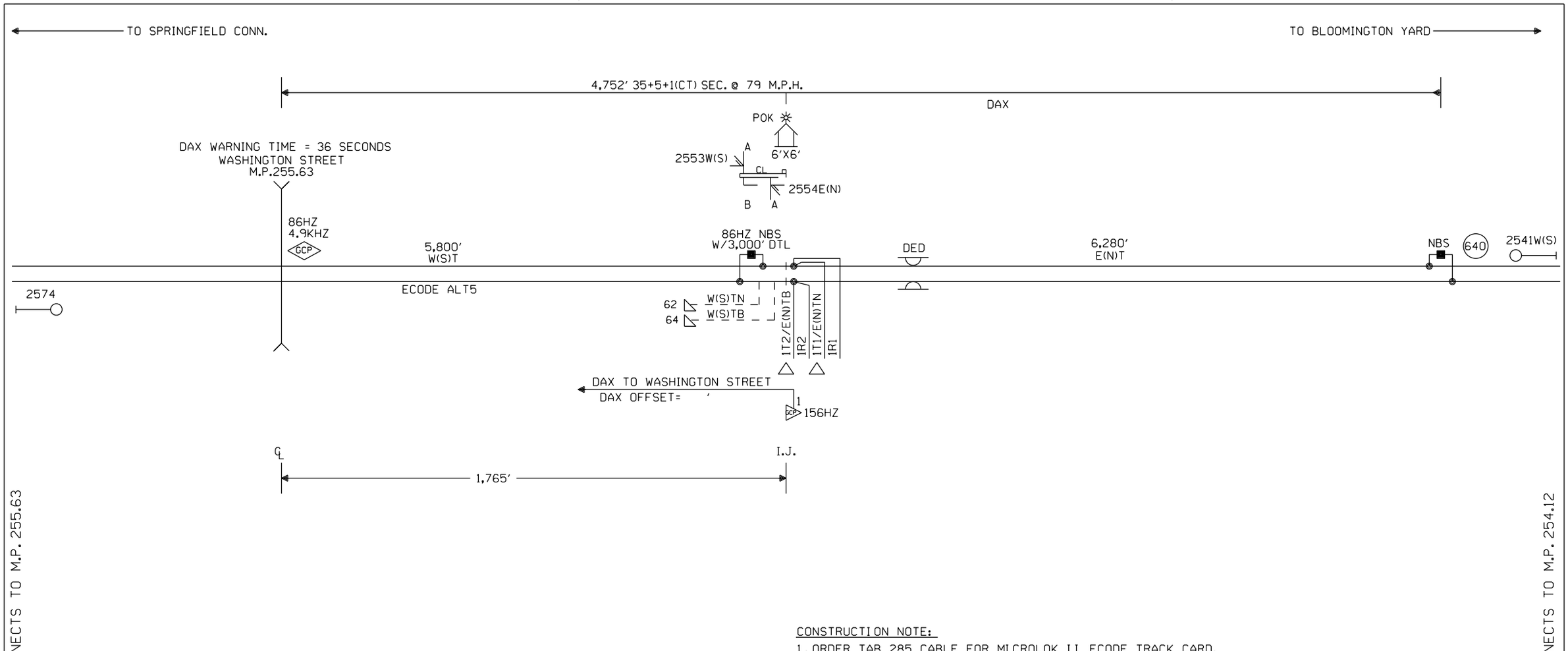

CONSTRUCTION NOTE:

1. ORDER TAB 285 CABLE FOR MICROLOK II ECODE TRACK CARD.

NOTES:

⊗ = TWISTED WIRES
ALL TRACK WIRES 2C. #6
INSULATED 1 TWIST PER FT.

TRANSMITTER AND RECEIVER LEADS
TO BE SEPARATED BY AT LEAST 12" IN TRENCH,
LENGTHS SHOULD NOT EXCEED MANUFACTURES
RECOMMENDATION.

ALL BUNGALOW WIRING TO BE #16 AWG FLEX
UNLESS OTHERWISE SPECIFIED EXCEPT ALL GROUND
WIRE TO BE #6 AWG FLEX OR LARGER.

REFER TO UP STANDARD DWG. FOR BUNGALOW
GROUNDING.

PORTABLE GENERATOR EXTENSION CORD
FOR 240V TO 240V IS PROVIDED AS WELL
AS A 120V TO 240V ADAPTER.

△ = ENSURE TRACK POLARITY IS
TRANSPOSED ACROSS ALL
INSULATED JOINTS.

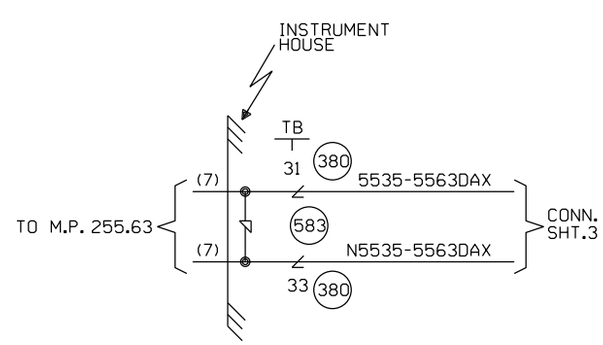

W(S) ← → E(N)

CABLE TABULATION

CABLE #7 7C#14 U.G.B.T. HOUSE TO MP. 255.63

NEW SHEET

					Designed: 09/27/12 TIER 1S PHASE 1 M.P. 239.70 TO M.P. 255.35 TO UPGRADE XING TO 4 QUAD WITH EGMS, VARIOUS C.P.'S Rec#: WO#: 10804 IS: NBT/ / /NST/MJF	MODIFICATION LEVEL		CIRCUIT MODIFICATIONS ARE NOT TO BE MADE WITHOUT AUTHORITY FROM THE OFFICE OF SIGNAL DESIGN	Date: 09/27/12	UNION PACIFIC RAILROAD	Sh.: 1
						Q.A. LAST LEVEL CHECKED	DU		Des: NST		
						LAST LEVEL MOD THIS TYPICAL	DU		Chk: NBT	ONE TRACK INTERMEDIATE SPRINGFIELD SUBDIVISION	MP: 255.35
						LAST LEVEL BY DESIGNER	DU		AFE: 10804		ID: CSL25535.1X
						CHANGED FROM TYPICAL?	Y			Office of AVP Engineering - Signal Omaha, Nebraska	
						REV 01.24.11 4K REMOTE.1					

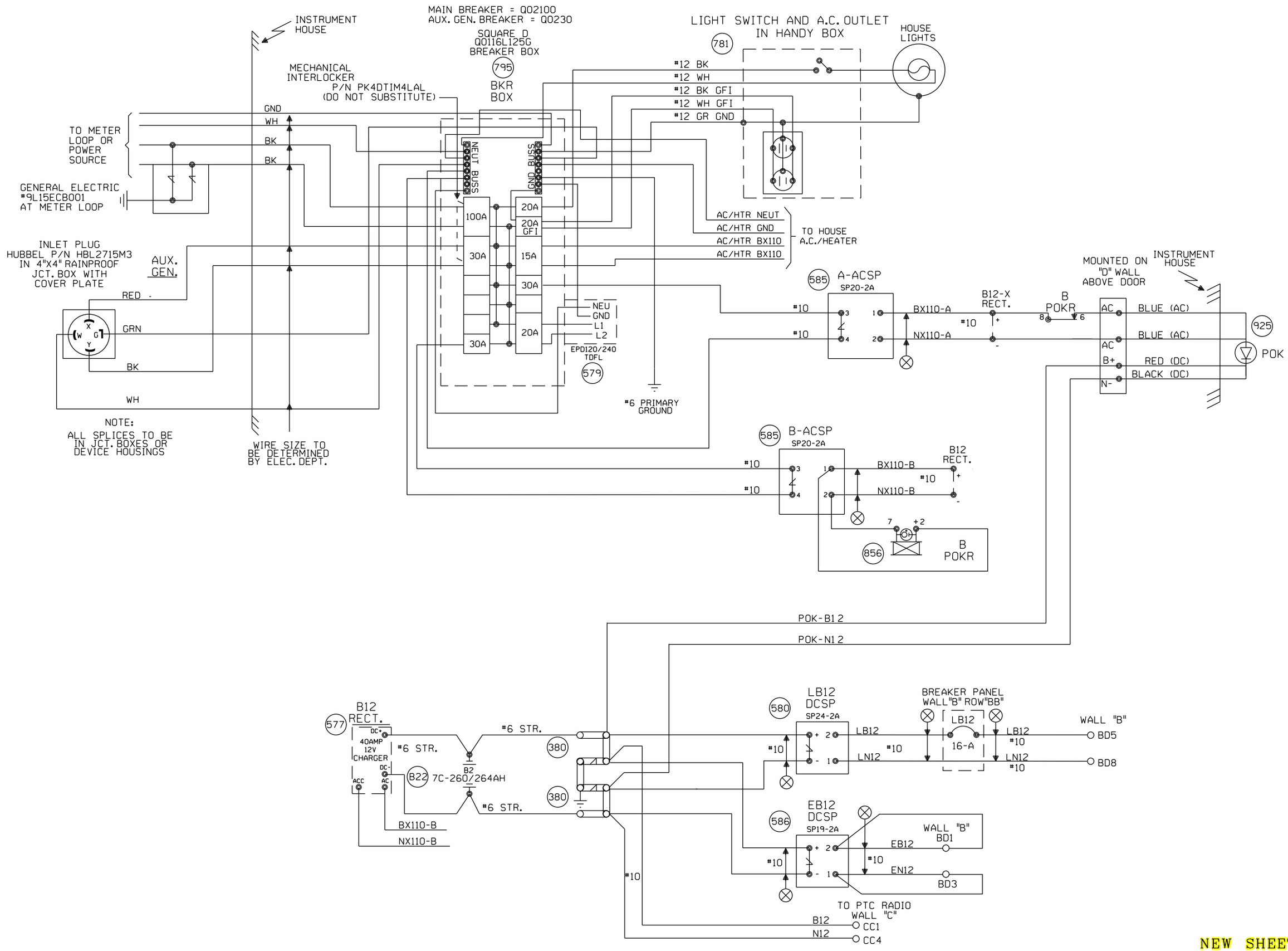

NEW SHEET

					Designed: 09/27/12 TIER IS PHASE 1 M.P. 239.70 TO M.P. 255.35 TO UPGRADE XING TO 4 QUAD WITH EGMS, VARIOUS C.P.'S Rec#: WO#: 10804 IS: NBT/ / /NST/MJF	MODIFICATION LEVEL Q.A. LAST LEVEL CHECKED DU LAST LEVEL MOD THIS TYPICAL DU LAST LEVEL BY DESIGNER DU CHANGED FROM TYPICAL? Y REV 01.24.11 4K SEARAC.2	CIRCUIT MODIFICATIONS ARE NOT TO BE MADE WITHOUT AUTHORITY FROM THE OFFICE OF SIGNAL DESIGN	Date: 09/27/12 Des: NST Chk: NBT AFE: 10804	UNION PACIFIC RAILROAD ONE TRACK INTERMEDIATE SPRINGFIELD SUBDIVISION Office of AVP Engineering - Signal Omaha, Nebraska	Sh.: 2 MP: 255.35 ID: CSL25535.2X

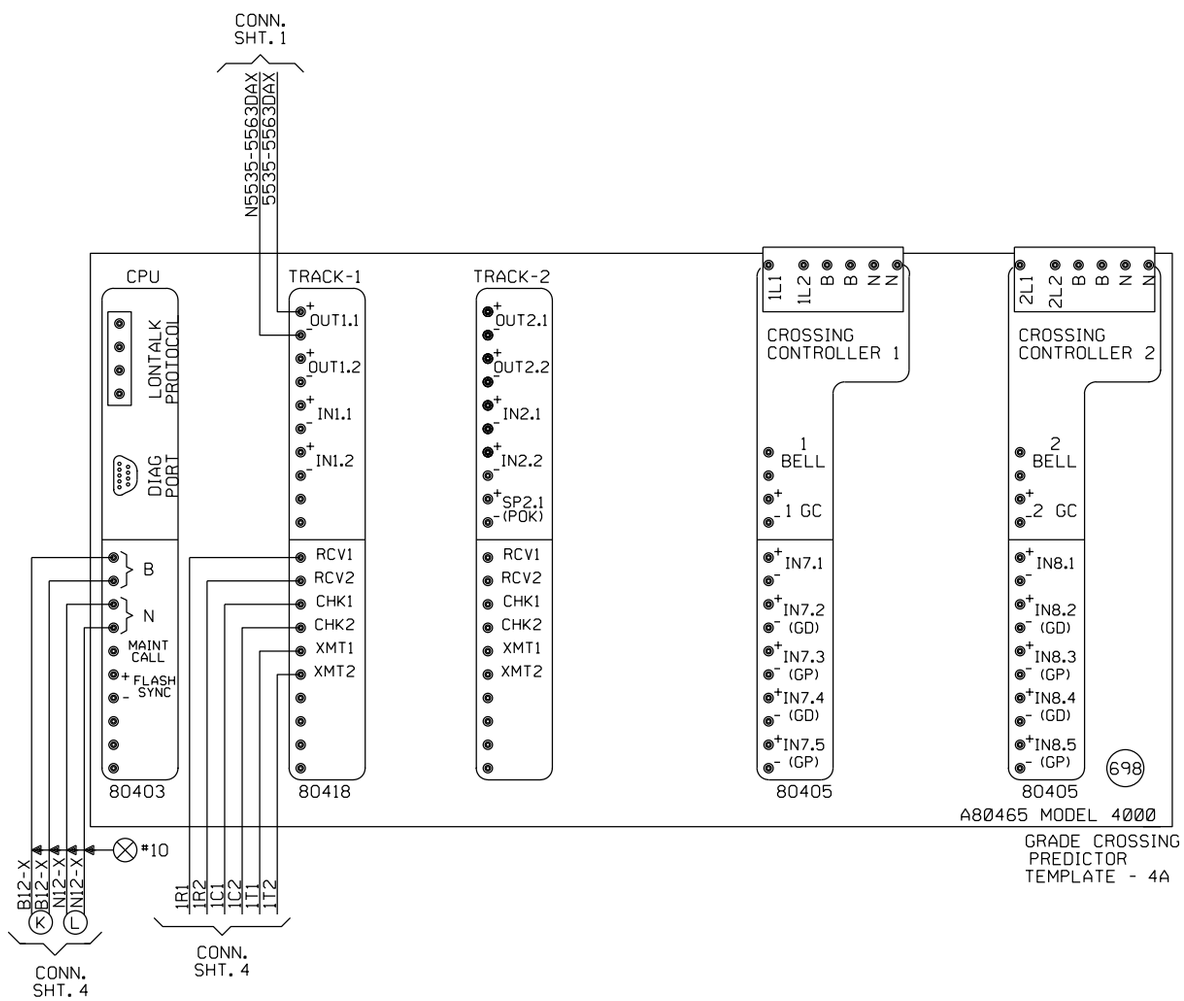

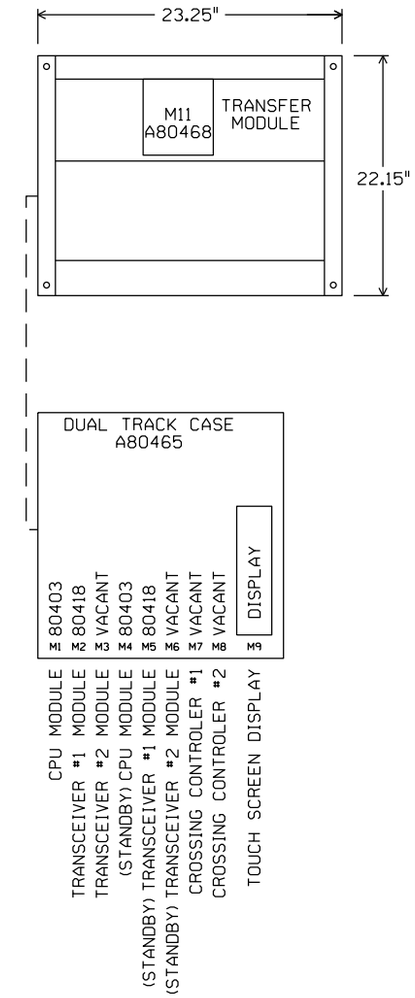

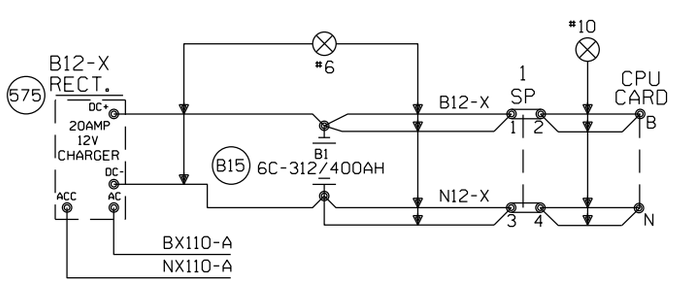

"Mf" FREQUENCY (HZ)	MAXIMUM TRANSMIT WIRE LENGTH (FEET)
86	100
114	125
156	150
211	200
285-970	250

NOTE:
EACH TRANSMITTER TO RAIL WIRE FROM XMT1 AND XMT2 MUST NOT EXCEED THE MAXIMUM LENGTH SPECIFIED IN THE TABLE SHOWN. THE RECEIVER WIRE LENGTH IS NOT CRITICAL. DOES NOT APPLY TO 6 TRACK WIRE APPLICATION.

NEW SHEET

Designed: 09/27/12
TIER 1S PHASE 1 M.P. 239.70 TO M.P. 255.35 TO UPGRADE XING TO 4 QUAD WITH EGMS, VARIOUS C.P.'S
Rec#: WO#: 10804
1S: NBT / / /NST/MJF

MODIFICATION LEVEL	
Q.A. LAST LEVEL CHECKED	DU
LAST LEVEL MOD THIS TYPICAL	DU
LAST LEVEL BY DESIGNER	DU
CHANGED FROM TYPICAL?	Y
REV 01.24.11 4K 2TKGF.3	

CIRCUIT MODIFICATIONS ARE NOT TO BE MADE WITHOUT AUTHORITY FROM THE OFFICE OF SIGNAL DESIGN

Date: 09/27/12
Des: NST
Chk: NBT
AFE: 10804

UNION PACIFIC RAILROAD

ONE TRACK INTERMEDIATE
SPRINGFIELD SUBDIVISION

Office of AVP Engineering - Signal Omaha, Nebraska

Sh.: 3
MP: 255.35
ID: CSL25535.3X

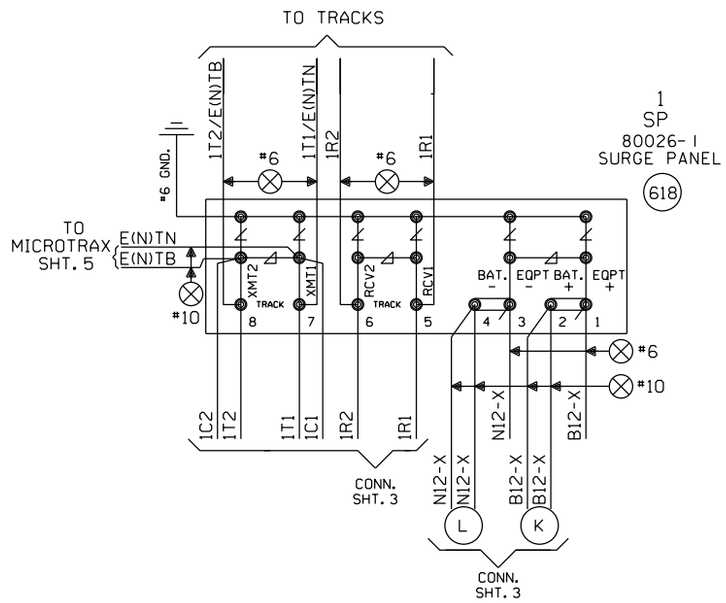

NEW SHEET

					Designed: 09/27/12 TIER 1S PHASE 1 M.P. 239.70 TO M.P. 255.35 TO UPGRADE XING TO 4 QUAD WITH EGMS, VARIOUS C.P.'S Rec#: WO#: 10804 1S: NBT / / /NST/MJF	MODIFICATION LEVEL		CIRCUIT MODIFICATIONS ARE NOT TO BE MADE WITHOUT AUTHORITY FROM THE OFFICE OF SIGNAL DESIGN	Date: 09/27/12	UNION PACIFIC RAILROAD	Sh.: 4
						Q. A. LAST LEVEL CHECKED	DU		Des: NST		
						LAST LEVEL MOD THIS TYPICAL	DU		Chk: NBT	ONE TRACK INTERMEDIATE SPRINGFIELD SUBDIVISION	MP: 255.35
						LAST LEVEL BY DESIGNER	DU		AFE: 10804	Office of AVP Engineering - Signal Omaha, Nebraska	ID: CSL25535.4X
						CHANGED FROM TYPICAL? REV 01.24.11 4K REMOTE.4	Y				

NOTES:

EAST= (N)ORTH.
WEST= (S)OUTH.

⊘ = OBSERVE CORRECT POLARITY. EQUIPMENT WILL BE DAMAGED IF CONNECTIONS ARE REVERSED

ENSURE TRACK POLARITY IS TRANSPOSED ACROSS ALL INSULATED JOINTS.

⧖ = TEST TERMINALS MUST BE INSTALLED ON ALL WIRING CONNECTED TO EXTERNAL CABLES (EXCEPT TRACK AND A.C. POWER WIRES).

SHOW ACTUAL DED INSTALLED LOCATION ON DRAWING.

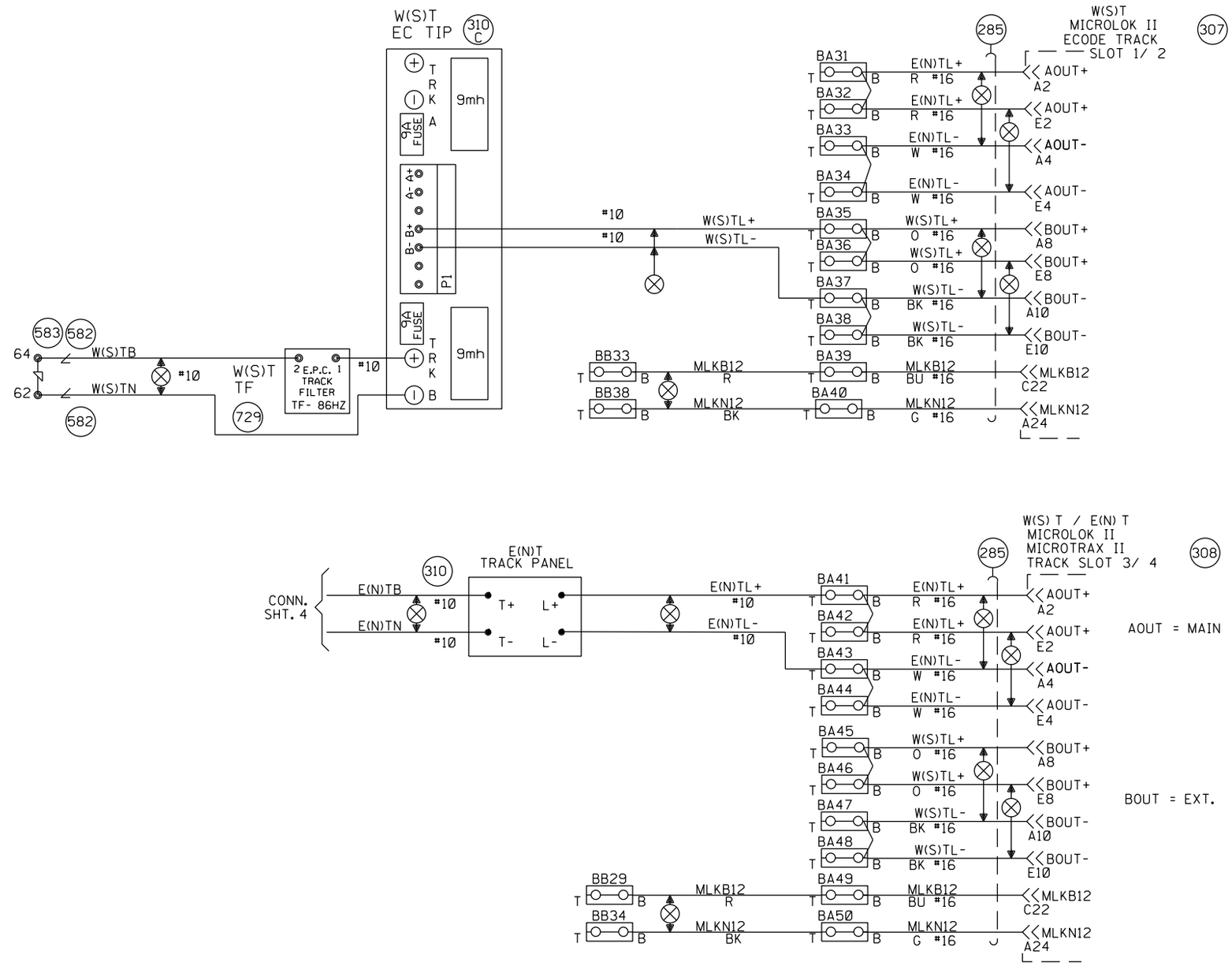

NEW SHEET

					Designed: 09/27/12 TIER IS PHASE 1 M.P. 239.70 TO M.P. 255.35 TO UPGRADE XING TO 4 QUAD WITH EGMS, VARIOUS C.P.'S Rec#: WO#: 10804 IS: NBT / / /NST/MJF	MODIFICATION LEVEL Q. A. LAST LEVEL CHECKED DU LAST LEVEL MOD THIS TYPICAL DU LAST LEVEL BY DESIGNER DU CHANGED FROM TYPICAL? Y REV 8/20/10 1TMLHBINTU.1	CIRCUIT MODIFICATIONS ARE NOT TO BE MADE WITHOUT AUTHORITY FROM THE OFFICE OF SIGNAL DESIGN	Date: 09/27/12 Des: NST Chk: NBT AFE: 10804	UNION PACIFIC RAILROAD ONE TRACK INTERMEDIATE SPRINGFIELD SUBDIVISION Office of AVP Engineering - Signal Omaha, Nebraska	Sh.: 5 MP: 255.35 ID: CSL25535.5S

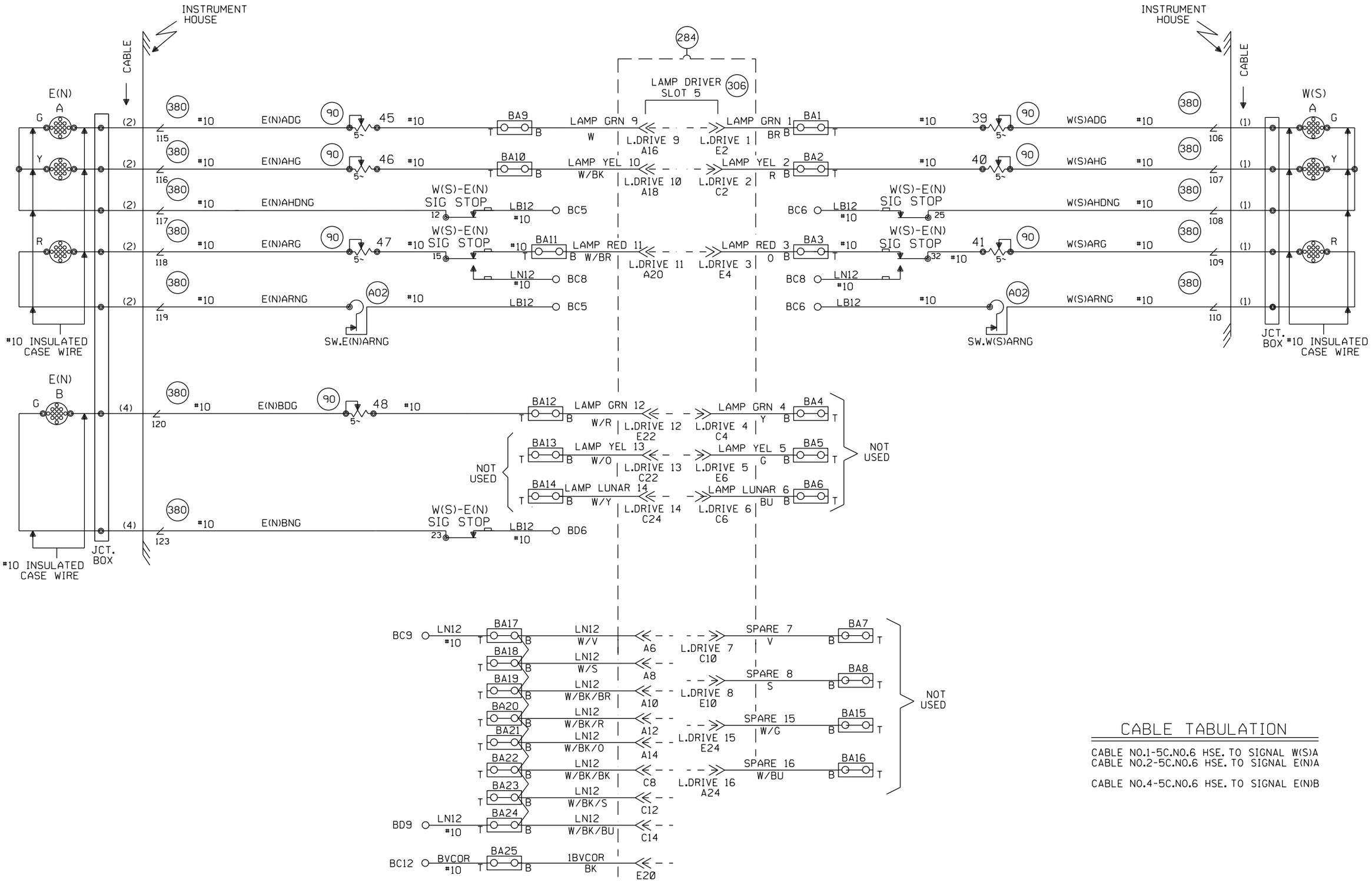

CABLE TABULATION

CABLE NO.1-5C.NO.6 HSE. TO SIGNAL W(S)A
CABLE NO.2-5C.NO.6 HSE. TO SIGNAL E(N)A

CABLE NO.4-5C.NO.6 HSE. TO SIGNAL E(N)B

NEW SHEET

Designed: 09/27/12
TIER IS PHASE 1 M.P. 239.70 TO M.P. 255.35 TO UPGRADE XING TO 4 QUAD WITH EGMS, VARIOUS C.P.'S
Rec#: WO#: 10804
IS: NBT / / /NST/MJF

MODIFICATION LEVEL	
Q.A. LAST LEVEL CHECKED	DU
LAST LEVEL MOD THIS TYPICAL	DU
LAST LEVEL BY DESIGNER	DU
CHANGED FROM TYPICAL?	Y

REV 8/20/10 1TMLHBINTUGS.3

CIRCUIT MODIFICATIONS ARE NOT TO BE MADE WITHOUT AUTHORITY FROM THE OFFICE OF SIGNAL DESIGN

Date: 09/27/12
Des: NST
Chk: NBT
AFE: 10804

UNION PACIFIC RAILROAD

ONE TRACK INTERMEDIATE
SPRINGFIELD SUBDIVISION

Office of AVP Engineering - Signal Omaha, Nebraska

Sh.: 6
MP: 255.35
ID: CSL25535.6S

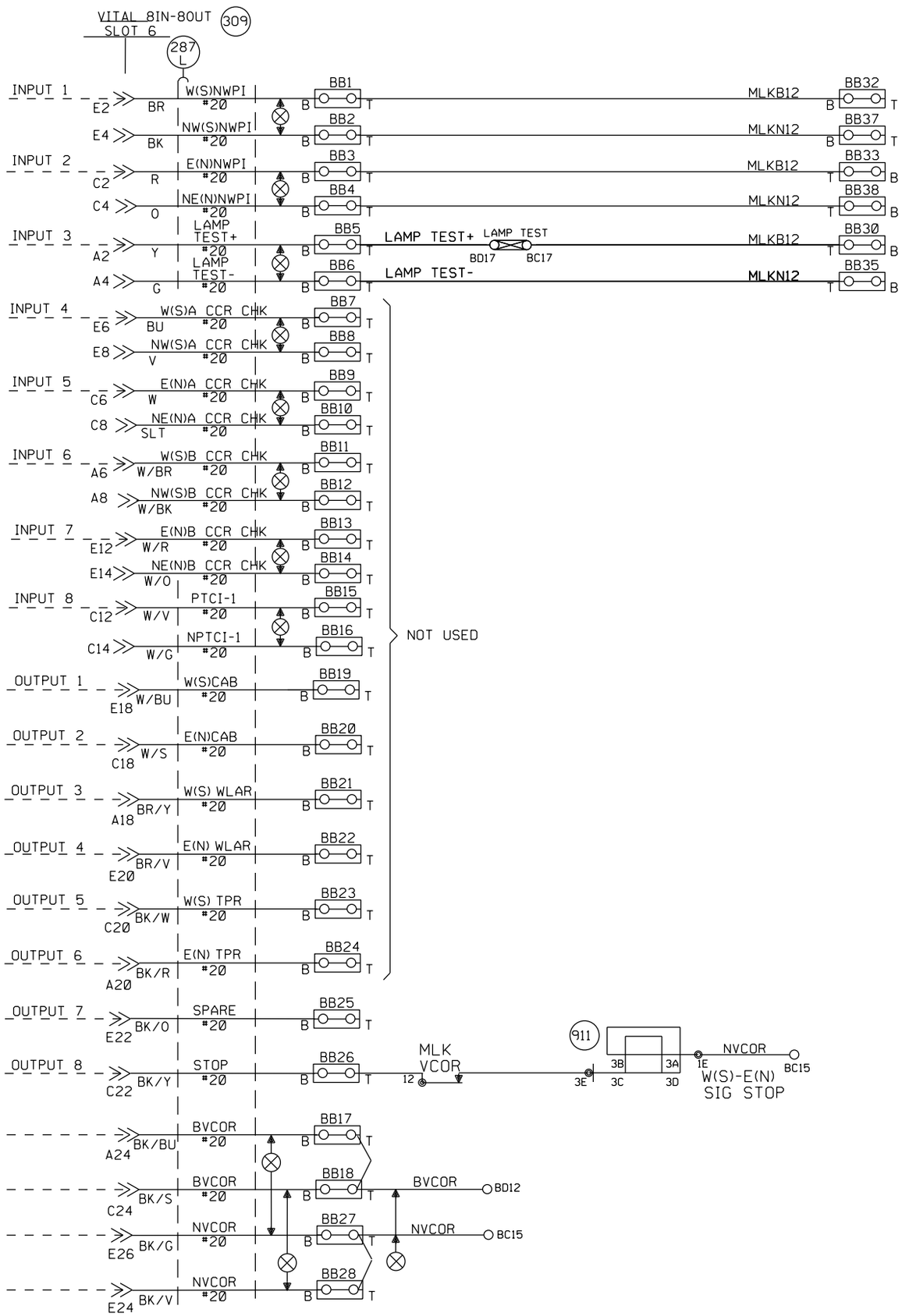

NEW SHEET

Designed: 09/27/12 TIER IS PHASE 1 M.P. 239.70 TO M.P. 255.35 TO UPGRADE XING TO 4 QUAD WITH EGMS, VARIOUS C.P.'S Rec#: WO#: 10804 IS: NBT / / NST/MJF	MODIFICATION LEVEL		CIRCUIT MODIFICATIONS ARE NOT TO BE MADE WITHOUT AUTHORITY FROM THE OFFICE OF SIGNAL DESIGN	Date: 09/27/12 Des: NST Chk: NBT AFE: 10804	UNION PACIFIC RAILROAD ONE TRACK INTERMEDIATE SPRINGFIELD SUBDIVISION Office of AVP Engineering - Signal Omaha, Nebraska	Sh.: 6A MP: 255.35 ID: CSL25535.6AS
	Q. A. LAST LEVEL CHECKED	DU				
	LAST LEVEL MOD THIS TYPICAL	DU				
	LAST LEVEL BY DESIGNER	DU				
	CHANGED FROM TYPICAL? REV 8/20/10 1TMLHBINTU.3A	Y				

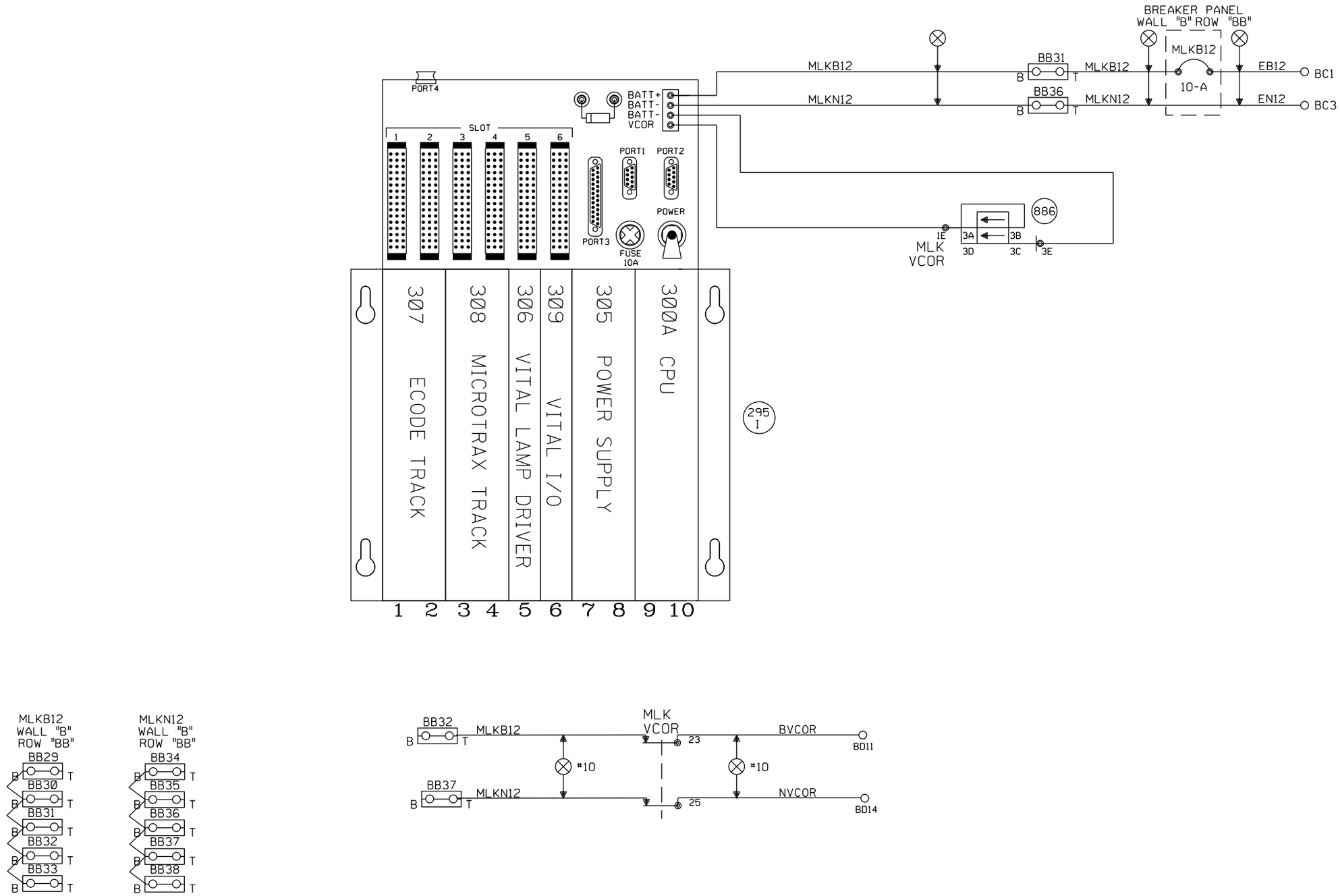

NEW SHEET

					Designed: 09/27/12 TIER IS PHASE 1 M.P. 239.70 TO M.P. 255.35 TO UPGRADE XING TO 4 QUAD WITH EGMS, VARIOUS C.P.'S Rec#: WO#: 10804 IS: NBT / / /NST/MJF	MODIFICATION LEVEL Q. A. LAST LEVEL CHECKED DU LAST LEVEL MOD THIS TYPICAL DU LAST LEVEL BY DESIGNER DU CHANGED FROM TYPICAL? Y REV 8/20/10 1TMLHBINTU.4	CIRCUIT MODIFICATIONS ARE NOT TO BE MADE WITHOUT AUTHORITY FROM THE OFFICE OF SIGNAL DESIGN	Date: 09/27/12 Des: NST Chk: NBT AFE: 10804	UNION PACIFIC RAILROAD ONE TRACK INTERMEDIATE SPRINGFIELD SUBDIVISION Office of AVP Engineering - Signal Omaha, Nebraska	Sh.: 7 MP: 255.35 ID: CSL25535.7S

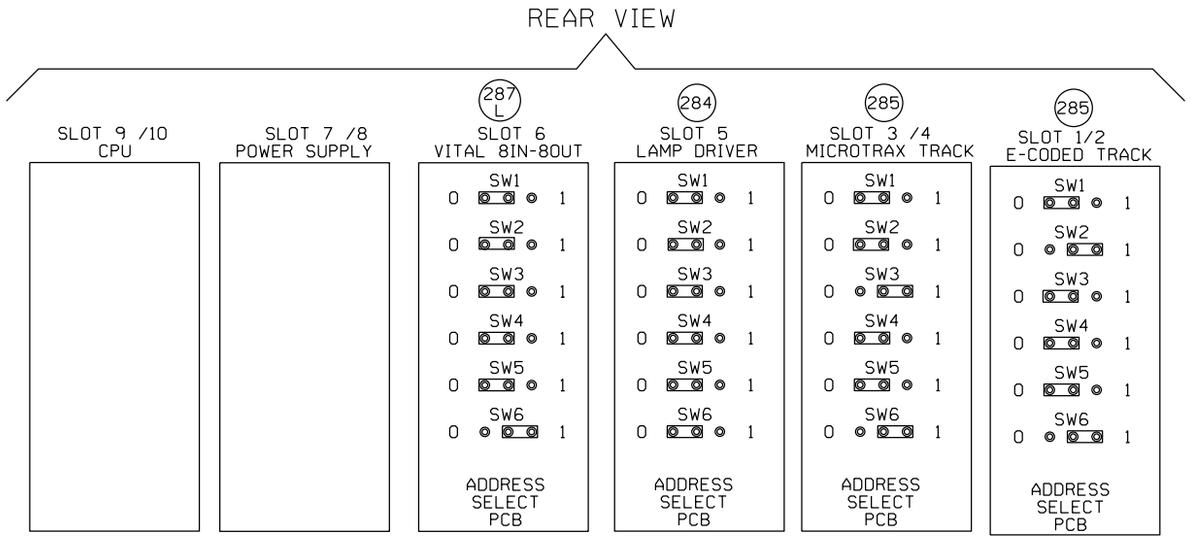

NOTE: FOR PTC COMPATIBLE CPU JUMPER SETTINGS REFER TO ANSALDO MANUAL 1D1.0028 PAGE 1-26 1-27 1-28 REV.1 DATE 8/2009

ML8UP5060 REV. N

IF BOX CHECKED SET APPROPRIATE PROG. ID

15 SEC SLOW PICK ET TO PREVENT JOINT HOP		USE WHEN INTERFACING MICRO-ECODE TO GETS ECODE
15 SEC SLOW PICK WT TO PREVENT JOINT HOP	X	USE WHEN INTERFACING MICRO-ECODE TO GETS ECODE
APPROACH TO #30 WEST?		(SET PROG ID 1)
APPROACH TO #30 EAST?		(SET PROG ID 2)
Y/G W/B SEND Y/FG EAST?		(SET PROG ID 3)
Y/G E/B SEND Y/FG WEST?		(SET PROG ID 5)
Y/G W/B SEND GREEN EAST?		(SET PROG ID 4)
Y/G E/B SEND GREEN WEST?	X	(SET PROG ID 6)
Y/FG W/B SEND GREEN EAST		(SET PROG ID 8)
Y/FG E/B SEND GREEN WEST		(SET PROG ID 9)
PROGRAM ID 1 (BINARY 1)		
PROGRAM ID 2 (BINARY 2)		
PROGRAM ID 3 (BINARY 4)		
PROGRAM ID 4 (BINARY 8)		
PROGRAM ID 5 (BINARY 16)		
PROGRAM ID 6 (BINARY 32)	X	
PROGRAM ID 7 (BINARY 64)		(SET TO DISABLE VIO8 CAB)
PROGRAM ID 8 (BINARY 128)		
PROGRAM ID 9 (BINARY 256)		
PROGRAM ID 10 (BINARY 512)		(MUST BE CLEAR)
PROGRAM ID 11 (BINARY 1024)	X	(MUST BE SET)
PROGRAM ID 12 (BINARY 2048)		(SET TO DISABLE INCAND. SIG BOARD)
PROGRAM ID 13 (BINARY 4096)	X	(SET TO DISABLE LED SIG BOARD)
PROGRAM ID 14 (BINARY 8192)		
PROGRAM ID 15 (BINARY 16384)		
PROGRAM ID 16 (BINARY 32768)		
PROGRAM ID 17 (BINARY 65536)		
PROGRAM ID 18 (BINARY 131072)		
PROGRAM ID 19 (BINARY 262144)		
PROGRAM ID 20 (BINARY 524288)		
PROGRAM ID 21 (BINARY 1048576)	X	
WEST TK UP SEND C5 EAST	X	
REC C5 W TK SEND C5 EAST		
EAST TK UP SEND C5 WEST		
REC C5 E TK SEND C5 WEST		
W(S) "B" HEAD FLASHING RED		(SET PROG ID 14)
W(S) "B" HEAD LUNAR		(SET PROG ID 15)
W(S) "B" HEAD YELLOW		(SET PROG ID 16)
W(S) "B" HEAD GREEN		(SET PROG ID 17)
E(N) "B" HEAD FLASHING RED		(SET PROG ID 18)
E(N) "B" HEAD LUNAR		(SET PROG ID 19)
E(N) "B" HEAD YELLOW		(SET PROG ID 20)
E(N) "B" HEAD GREEN	X	(SET PROG ID 21)
E(N) C5 APPLIT	X	(ENABLE APPLIT W(S) SIG W/LOSS OF C5)
W(S) C5 APPLIT	X	(ENABLE APPLIT E(N) SIG W/LOSS OF C5)

PLACE AN "X" IN THE BOX TO REPRESENT A SET STATE.

NOTE: ECODE CODED TRACK CIRCUIT BOARD MUST BE CONFIGURED FOR ALT 5.

NEW SHEET

Designed: 09/27/12
TIER IS PHASE 1 M.P. 239.70 TO M.P. 255.35 TO UPGRADE XING TO 4 QUAD WITH EGMS, VARIOUS C.P.'S
Rec#: WO#: 10804
IS: NBT / / / NST/MJF

MODIFICATION LEVEL	
O. A. LAST LEVEL CHECKED	DU
LAST LEVEL MOD THIS TYPICAL	DU
LAST LEVEL BY DESIGNER	DU
CHANGED FROM TYPICAL?	Y

REV 8/20/10 1TMLHBINTU.5

CIRCUIT MODIFICATIONS ARE NOT TO BE MADE WITHOUT AUTHORITY FROM THE OFFICE OF SIGNAL DESIGN

Date: 09/27/12
Des: NST
Chk: NBT
AFE: 10804

UNION PACIFIC RAILROAD

ONE TRACK INTERMEDIATE
SPRINGFIELD SUBDIVISION

Office of AVP Engineering - Signal Omaha, Nebraska

Sh.: 8
MP: 255.35
ID: CSL25535.8S

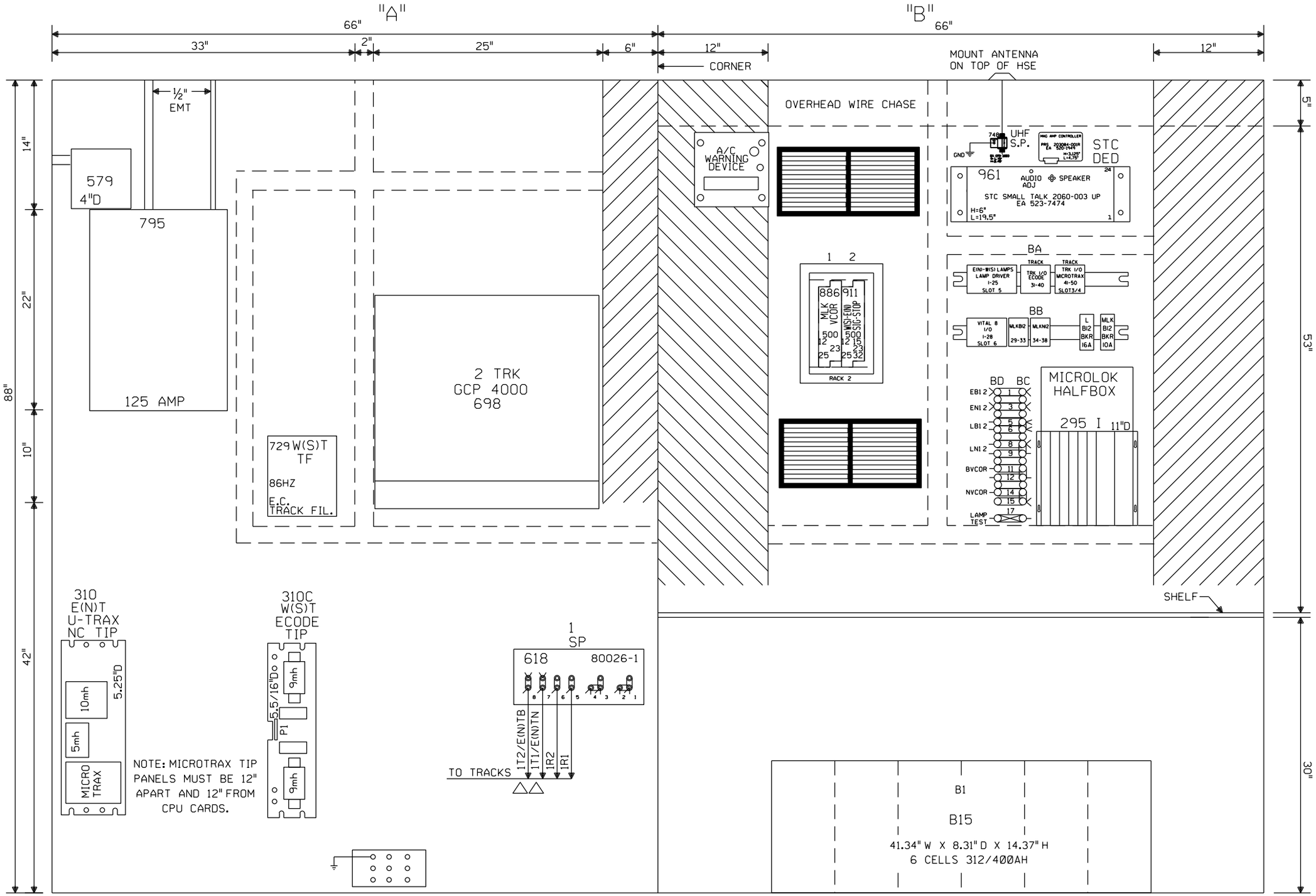

NOTE: ALL DIMENSIONS SHOWN ARE APPROXIMATE.

△ = FIELD VERIFY POLARITY.

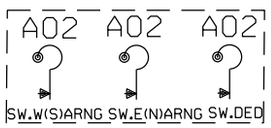

NOTE:
PLEASE SHOW WHERE LOCATED ON OUTSIDE OF HOUSE.

NEW SHEET

Designed: 09/27/12

TIER IS PHASE 1 M.P. 239.70 TO M.P. 255.35 TO UPGRADE XING TO 4 QUAD WITH EGMS, VARIOUS C.P.'S

Rec*: WO*: 10804
IS: NBT/ /NST/MJF

MODIFICATION LEVEL	
Q.A. LAST LEVEL CHECKED	DU
LAST LEVEL MOD THIS TYPICAL	DU
LAST LEVEL BY DESIGNER	DU
CHANGED FROM TYPICAL?	Y

REV 01.24.11 4K 4TKGFC.8

CIRCUIT MODIFICATIONS ARE NOT TO BE MADE WITHOUT AUTHORITY FROM THE OFFICE OF SIGNAL DESIGN

Date: 09/27/12
Des: NST
Chk: NBT
AFE: 10804

UNION PACIFIC RAILROAD

ONE TRACK INTERMEDIATE
SPRINGFIELD SUBDIVISION

Office of AVP Engineering - Signal Omaha, Nebraska

Sh.: 9
MP: 255.35
ID: CSL25535.9X

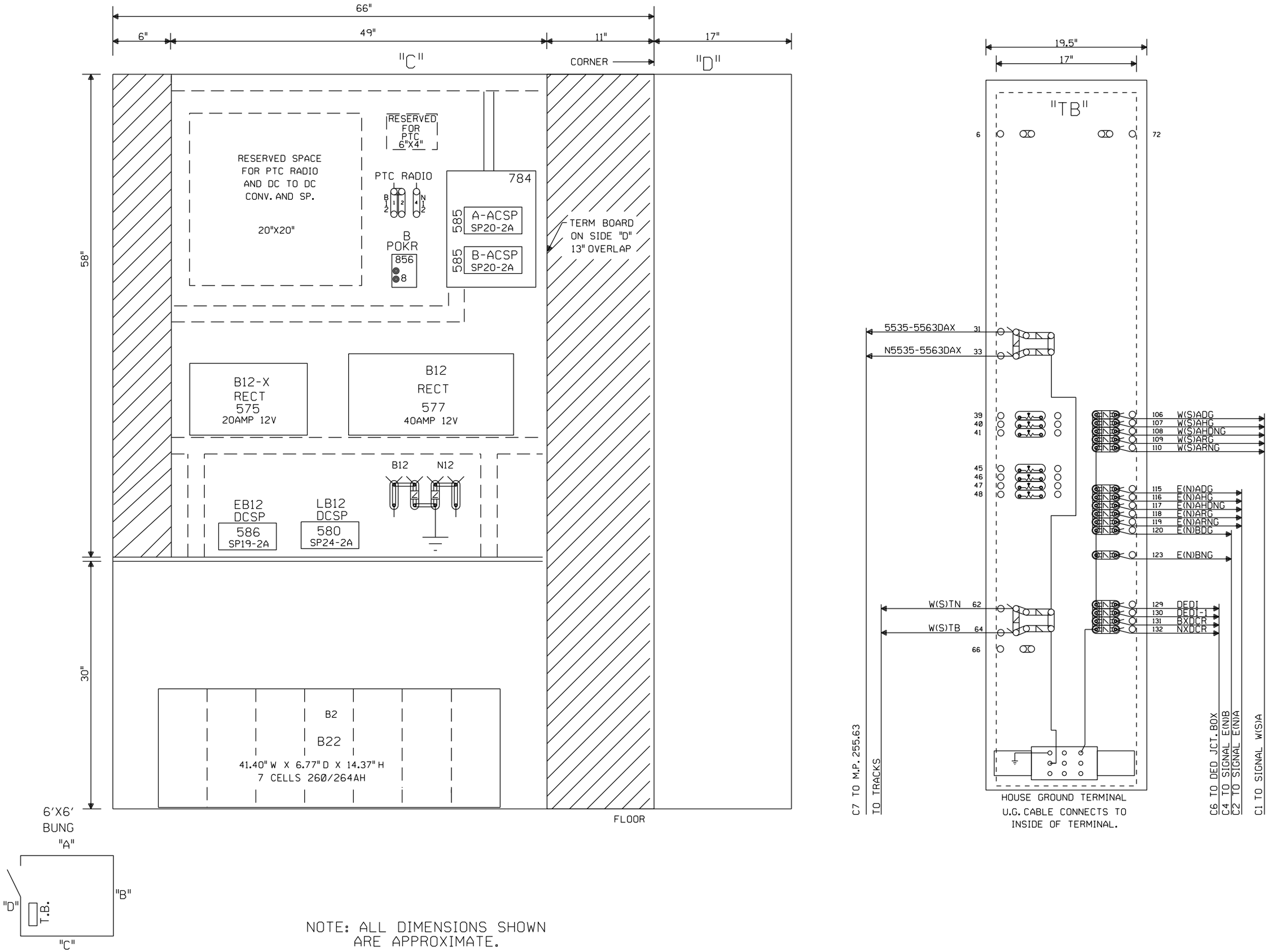

NOTE: ALL DIMENSIONS SHOWN ARE APPROXIMATE.

NEW SHEET

					Designed: 09/27/12 TIER 1S PHASE 1 M.P. 239.70 TO M.P. 255.35 TO UPGRADE XING TO 4 QUAD WITH EGMS, VARIOUS C.P.'S Rec#: WO#: 10804 IS: NBT/ /NST/MJF	MODIFICATION LEVEL Q. A. LAST LEVEL CHECKED DU LAST LEVEL MOD THIS TYPICAL DU LAST LEVEL BY DESIGNER DU CHANGED FROM TYPICAL? Y REV 01.24.11 4K GFC.9	CIRCUIT MODIFICATIONS ARE NOT TO BE MADE WITHOUT AUTHORITY FROM THE OFFICE OF SIGNAL DESIGN	Date: 09/27/12 Des: NST Chk: NBT AFE: 10804	UNION PACIFIC RAILROAD ONE TRACK INTERMEDIATE SPRINGFIELD SUBDIVISION Office of AVP Engineering - Signal Omaha, Nebraska	Sh.: 10 MP: 255.35 ID: CSL25535.10X

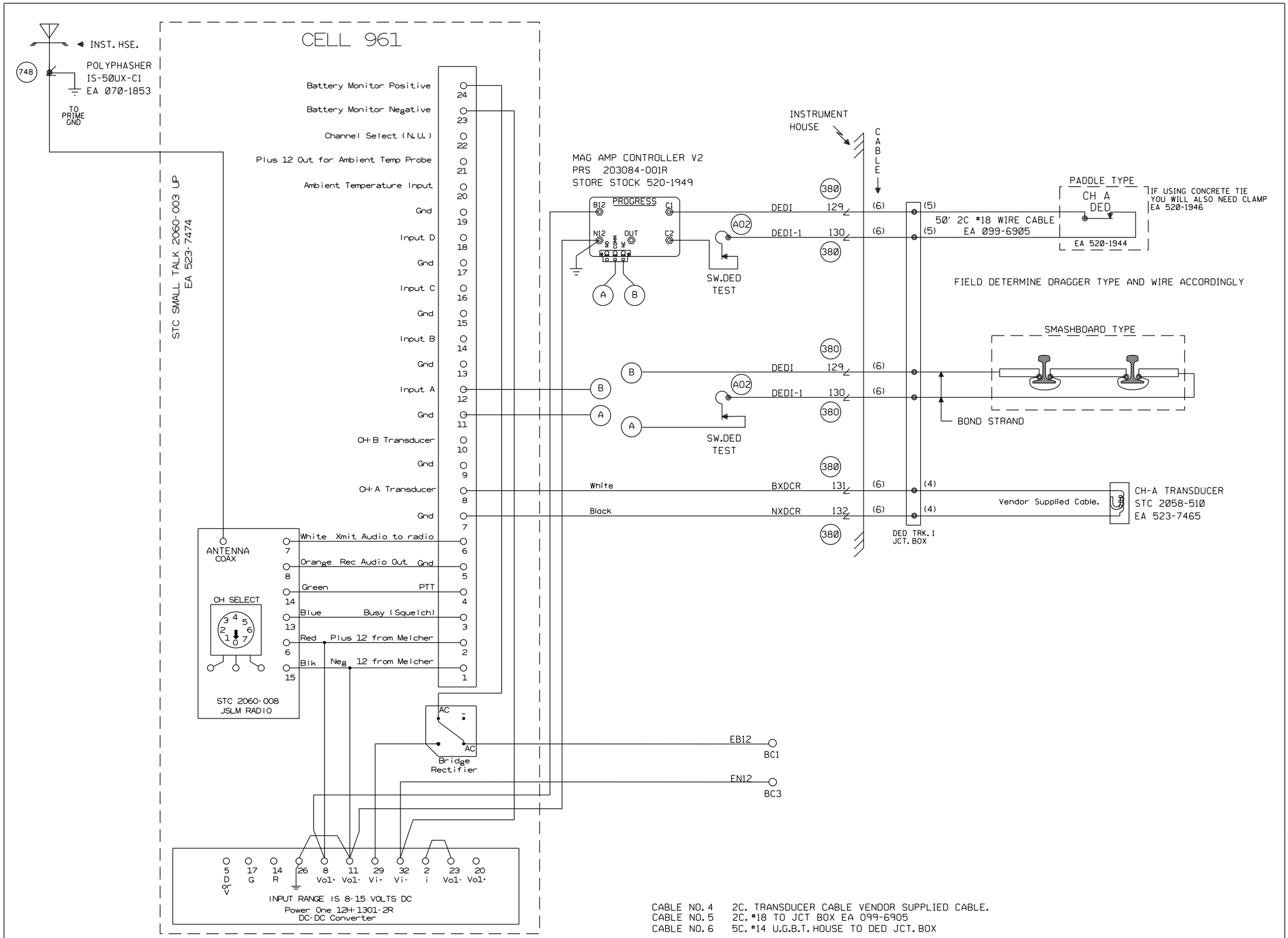

CABLE NO. 4 2C. TRANSDUCER CABLE VENDOR SUPPLIED CABLE.
CABLE NO. 5 2C. #18 TO JCT BOX EA 099-6905
CABLE NO. 6 5C. #14 U.G.B.T. HOUSE TO DED JCT. BOX

NEW SHEET

Designed: 09/27/12
TIER IS PHASE 1 M.P. 239.70 TO M.P. 255.35 TO UPGRADE XING TO 4 QUAD WITH EGMS, VARIOUS C.P.'S
Rec#: WO#: 10804
IS: NBT / / NST/MJF

MODIFICATION LEVEL	
Q.A. LAST LEVEL CHECKED	DU
LAST LEVEL MOD THIS TYPICAL	DU
LAST LEVEL BY DESIGNER	DU
CHANGED FROM TYPICAL?	Y

REV 8/20/10 1TMLHBINTU.7

CIRCUIT MODIFICATIONS ARE NOT TO BE MADE WITHOUT AUTHORITY FROM THE OFFICE OF SIGNAL DESIGN

Date: 09/27/12
Des: NST
Chk: NBT
AFE: 10804

UNION PACIFIC RAILROAD

ONE TRACK INTERMEDIATE
SPRINGFIELD SUBDIVISION

Office of AVP Engineering - Signal Omaha, Nebraska

Sh.: 11
MP: 255.35
ID: CSL25535.11S

Minimum Program Steps Report

Location and SIN

DOT Number: 000000R
Milepost Number: 255.35
Site Name: ALTON, IL

SIN: 762010010016 *

* Parameter is part of office check number calculation.

MCF and Template Selection

MCF Name: GCP-T6X-02-6.mcf
MCF Revision: 26
MCFCRC: 494D2656

Template = 4A:6 Remotes (OCCN) *

* Parameter is part of office check number calculation.

Minimum Program Steps

MS4000 configuration
Track 1 : GCP Frequency = 156 Hz (OCCN,TCN) (Hidden) *

BASIC: module configuration
Chassis Type = Dual Two Track (OCCN) *

GCP: track 1
Track 1 : GCP Frequency = 156 Hz (OCCN,TCN) *
Track 1 : Approach Distance = 3074 ft (OCCN,TCN) *

GCP: track 1 Dax A
Track 1 : Dax A Warning Time = 36 sec (OCCN) *
Track 1 : Dax A Offset Distance = 1678 ft (OCCN) *

AND: track Anding
AND 1 XR Used = No (OCCN) *

OUTPUT: assignment page 1
OUT 1.1 = T1 Dax A (OCCN) *

Express: MS4000 configuration
Track 1 : GCP Frequency = 156 Hz (OCCN,TCN) (Hidden) *

* Parameter is part of office check number calculation.

Check Numbers

Office Check Number: 2F93027B

Config. Check Number: 54C42582
(Based on MCF Revision 26)

Parameters not part of office check number calculation:

Comments

<none>

Configuration Package File

Filename: CSL25535_000000R.pac
Path: H:\UP\Springfield Sub Tier 1 Ph. 1 11-419-1\PAC Files\MP 255.35\
Date/Time: 1/07/2016 9:55:46
DT Version: 5.7.3