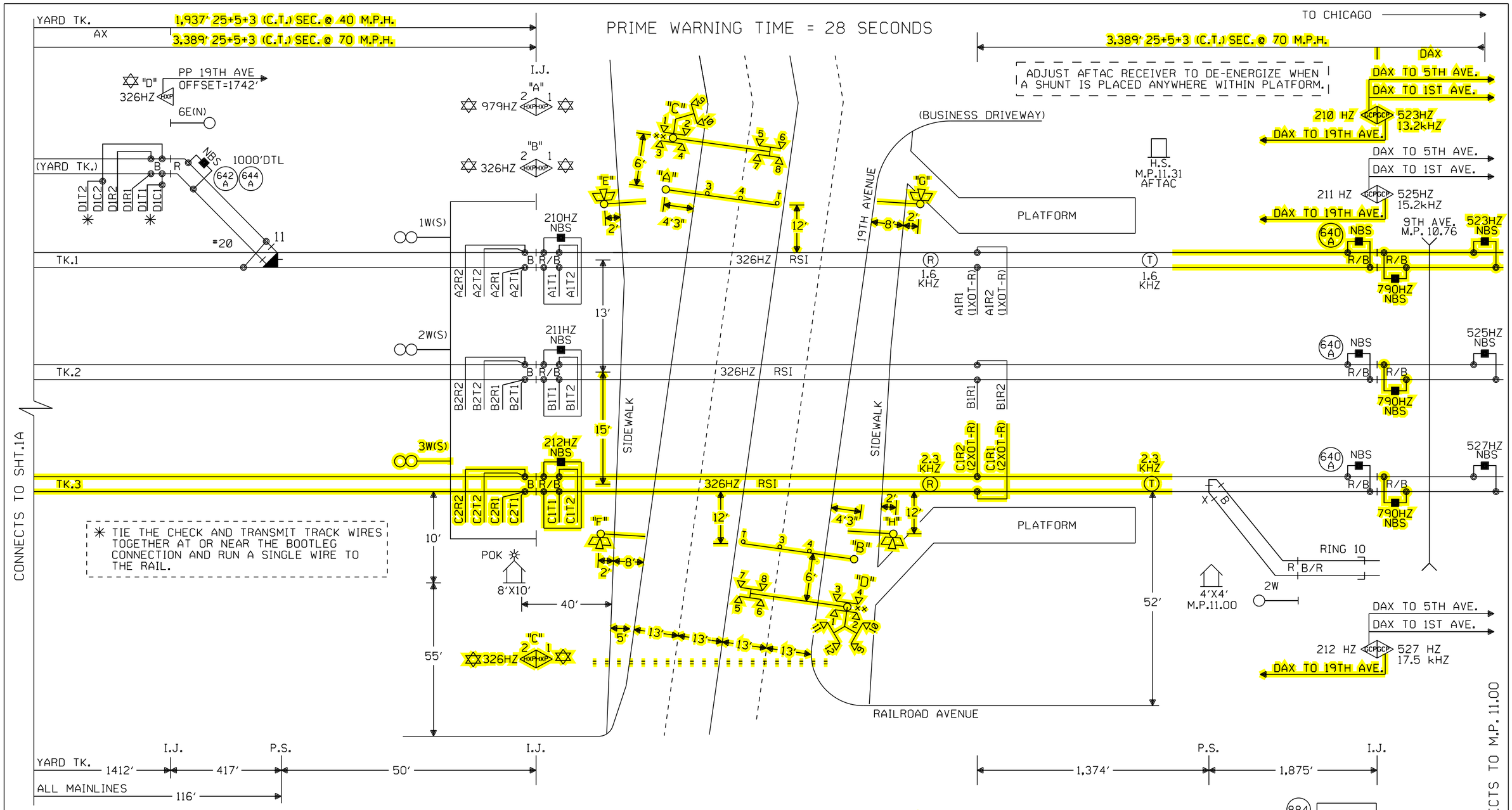


NOTES:

⊗ = TWISTED WIRES INSULATED 1 TWIST PER FT. ALL TRACK WIRES 2C. #6

TRANSMITTER AND RECEIVER LEADS TO BE SEPARATED BY AT LEAST 12" IN TRENCH, LENGTHS SHOULD NOT EXCEED MANUFACTURER'S RECOMMENDATION.

TOP OF FOUNDATION TO BE AT SAME ELEVATION AS THE SURFACE OF THE TRAVELED WAY & NO MORE THAN 4" ABOVE THE SURFACE OF THE GROUND.

ALL BUNGALOW WIRING TO BE #16 AWG FLEX UNLESS OTHERWISE SPECIFIED EXCEPT ALL GROUND WIRE TO BE #6 AWG FLEX OR LARGER.

ALL WIRING IN GATE MECHANISM TO BE #10 "AWG FLEX".

REFER TO UP STANDARD DWG FOR BUNGALOW GROUNDING.

PORTABLE GENERATOR EXTENSION CORD FOR 240V TO 240V IS PROVIDED AS WELL AS A 120V TO 240V ADAPTER.

ALL LIGHTS TO BE 12" ROUNDELS.

= = = = = = = 4" X 60' CONDUIT

LIGHTS: LED LIGHTS

GATE "A": 30' PED GATE "E": 10'
GATE "B": 30' PED GATE "F": 10'
CANT "C": 24' PED GATE "G": 10'
CANT "D": 24' PED GATE "H": 10'

×× = BELL

✡ = HXP TO OPERATE IN SEMI-BI DIRECTIONAL MODE.

△ = ENSURE TRACK POLARITY IS TRANSPOSED ACROSS ALL INSULATED JOINTS.

TRK 1 ISLAND DISTANCE 153' MINIMUM 120' REQUIRED

TRK 2 ISLAND DISTANCE 153' MINIMUM 120' REQUIRED

TRK 3 ISLAND DISTANCE 153' MINIMUM 120' REQUIRED

PREFERRED ISLAND WIRE CONNECTIONS ARE A MINIMUM 50' FROM EDGE OF ROAD

= VOICE MESSAGE SYSTEM.

= ANOTHER TRAIN COMING SIGN.

OFFSET AND ISLAND DISTANCES TO BE VERIFIED BY FIELD

W(S) ← → E(N)

CONSTRUCTION NOTES:

- ALL NEW TO THIS SHEET IS YELLOW.
- UPDATE ALL TO CURRENT STANDARD
- TRACK FORCES WILL CONNECT THE NEW TRACK #3 TO EXISTING TRACK #2 WEST OF THE POINT OF SWITCH AT M.P. 11.00.
- FIELD VERIFY ALL SHUNT PLACEMENTS MEET PROPER APPROACH DISTANCES AS SHOWN.

**REDRAWN**

Designed: 4/29/16
INSTALL 3RD MAIN TK. 25TH TO VALE
Rec*: WO*: 31881
IS: RLB/ /ATG/JVJ

| MODIFICATION LEVEL | |
|---|---|
| O. A. LAST LEVEL CHECKED | DU |
| LAST LEVEL MOD THIS TYPICAL | DU |
| LAST LEVEL BY DESIGNER | DU |
| CHANGED FROM TYPICAL? | Y |

REV 01.24.11 4K 2TUCGTYP.1

CIRCUIT MODIFICATIONS ARE NOT TO BE MADE WITHOUT AUTHORITY FROM THE OFFICE OF SIGNAL DESIGN

Date: 04/29/16
Des: ATG
Chk: RLB
AFE: 31881

UNION PACIFIC RAILROAD
MELROSE PARK, IL
19TH AVENUE
GENEVA SUBDIVISION
Office of AVP Engineering - Signal Omaha, Nebraska

Sh.: 1
DOT 174009S
MP: 11.38
ID: GEN1138.1X

GEN1138.1X 8/11/2016 8:28:38 AM

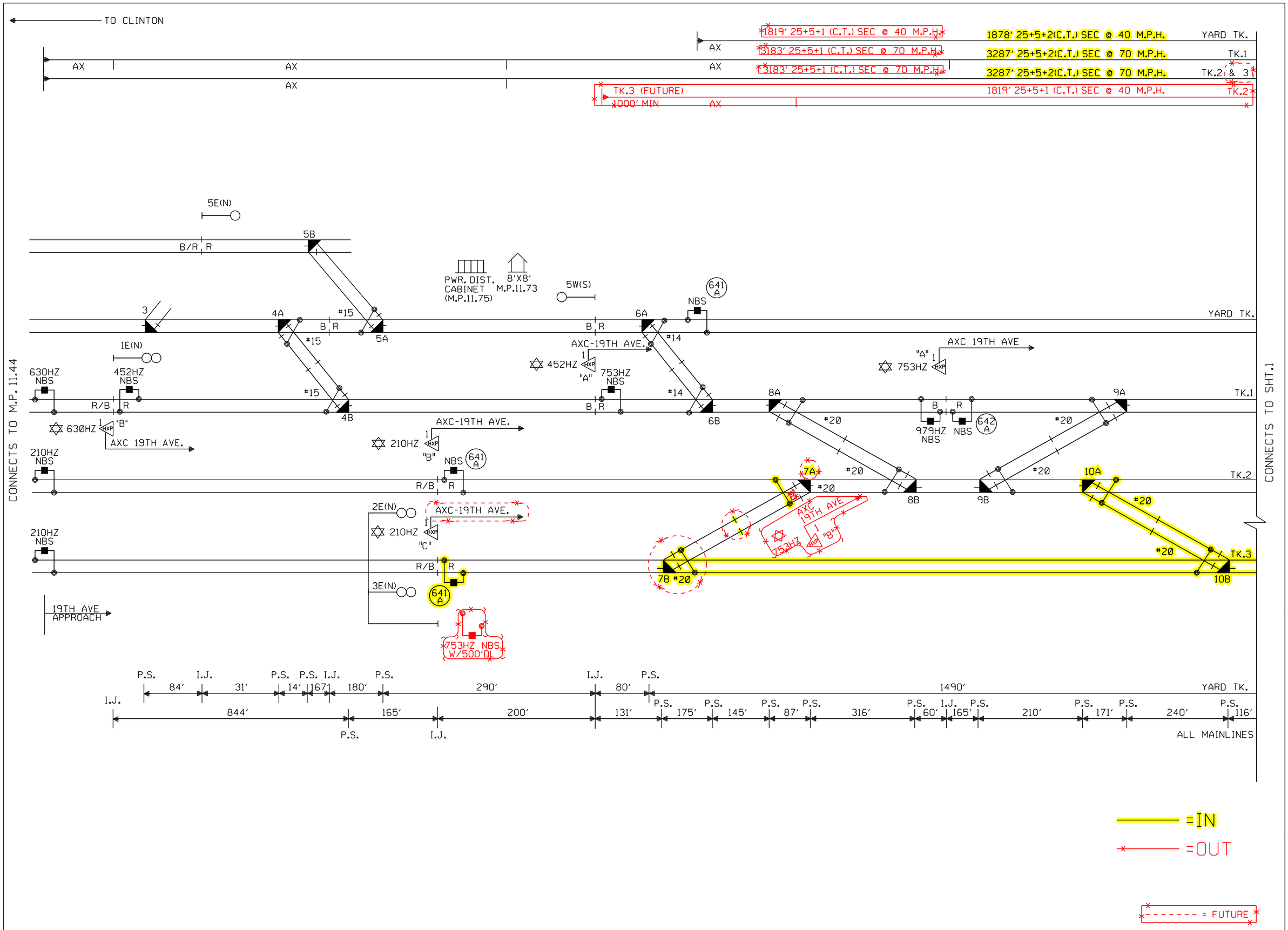


| | | | | | | | | | | |
|---|---|---|---|---|---|---|---|---|---|---|
| | | | Designed: 4/29/16<br>INSTALL 3RD MAIN TK. 25TH TO VALE<br>Rec#: WO#: 31881<br>IS: RLB / /ATG/JVJ | Revised: 2/9/16<br>CHICAGO CREATE PROJECT - B2 PROVO JCT.<br>Rec#: 21503 WO#: 89793 /MWK<br>IS: TAH/ATG/ RC /MDF | Revised: 2/8/16<br>CHICAGO CREATE PROJECT - B2 25TH AVENUE<br>Rec#: 21503 WO#: 89794 /JJL<br>IS: TAH/ATG/ RC /MDF | MODIFICATION LEVEL<br>O. A. LAST LEVEL CHECKED DO<br>LAST LEVEL MOD THIS TYPICAL DO<br>LAST LEVEL BY DESIGNER DS<br>CHANGED FROM TYPICAL? Y<br>REV 02.01.08 4K 2TUCGTYP.1 | CIRCUIT MODIFICATIONS ARE NOT TO BE MADE WITHOUT AUTHORITY FROM THE OFFICE OF SIGNAL DESIGN | Date: 02/11/10<br>Des: RC<br>Chk: JJL<br>AFE: 89794 | UNION PACIFIC RAILROAD<br>MELROSE PARK, ILLINOIS<br>19TH AVENUE<br>GENEVA SUBDIVISION<br>Office of AVP Engineering - Signal Omaha, Nebraska | Sh.: 1A<br>DOT 174 009S<br>MP: 11.38<br>ID: GEN1138.1AX |

GEN1138.1AX 8/11/2016 8:28:33 AM

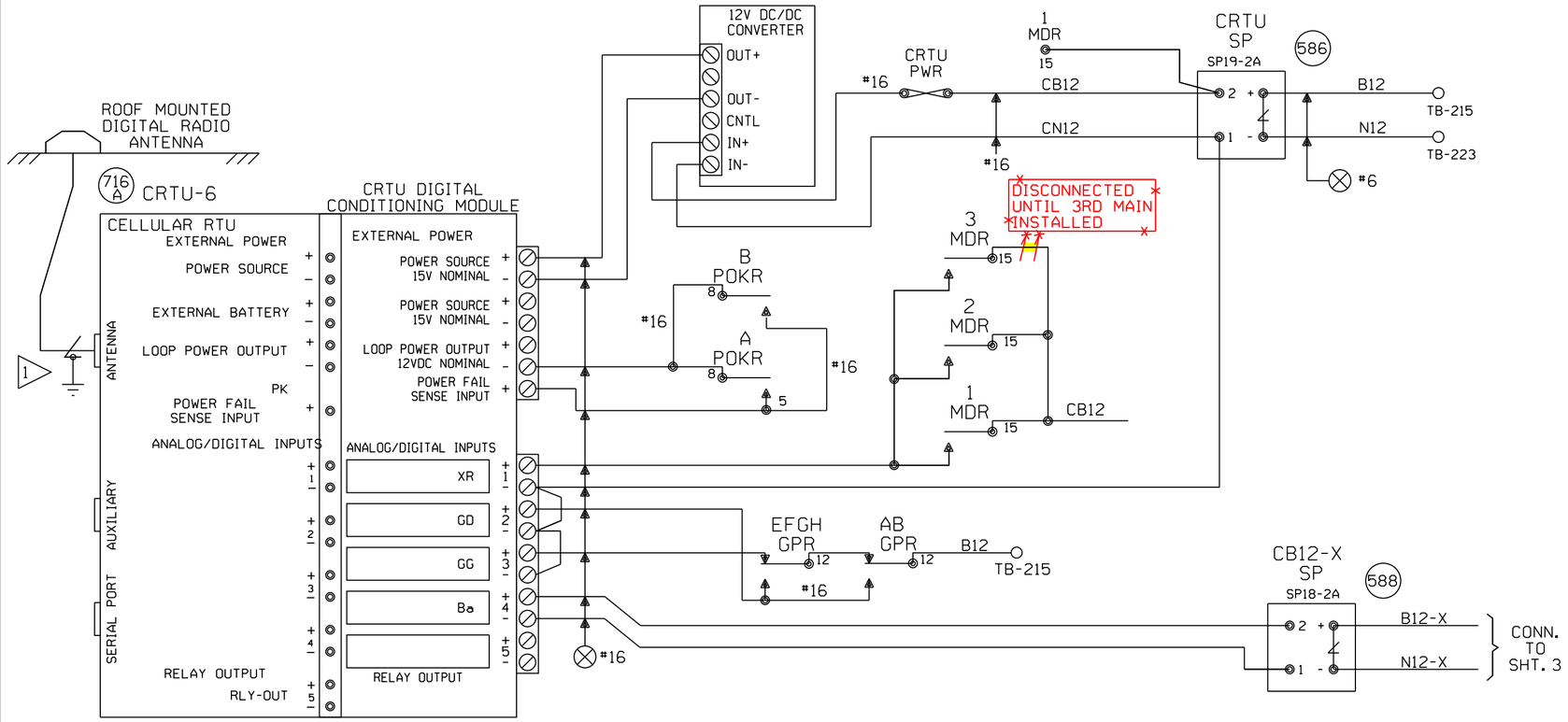


NOTES:

ALL DIODES 1N5060 OR 1N4004 UNLESS OTHERWISE NOTED.

MOUNT ANTENNA ON TOP OF HOUSE.

ALL WIRES #18 UNLESS OTHERWISE NOTED.

ALL UNUSED 'NC' INPUTS MUST BE TIED HIGH TO BATTERY

ALL UNUSED ANALOG INPUTS MUST BE TIED HIGH TO BATTERY

ALL UNUSED 'NO' INPUTS MUST BE DISCONNECTED

ANALOG AND AC INPUT MODULES MUST BE MOUNTED LESS THAN 12" FROM CRTU

CRTU FRONT PANEL DISPLAY CHART INDICATES NORMAL STATE

DIGITAL INPUT HIGH, OR POWER FAIL INPUT CLOSED

DIGITAL INPUT LOW, OR POWER FAIL INPUT OPEN

NORMAL STATE FOR ANALOG CHANNELS IS EQUAL TO THE STORED NOMINAL VOLTAGE +120% OR -81%

L — LATCH IS SET BECAUSE CRTU DETECTED AN ALARM CONDITION

12.06V L

'sRUN MODE' 'sRUN MODE-SILENT'

CRTU RADIO IS DISABLED. REPROGRAM CRTU WITH LAPTOP.

1 ANTENNA SURGE PROTECTOR - POLYPHASER CORP. W/ #10 AWG GROUNDING WIRE - 18 " MAX. LENGTH.

## UNIT INSTALLATION AND SETUP

R.R. SITE ID WHERE; SSSS = 4 CHARACTER SUBDIVISION ID. FILL WITH PRECEDING ZEROS AS REQUIRED. THE MAIN TRACK SUBDIVISION ID# IS IN THE CURRENT TIMETABLE. INDUSTRIAL LEADS, LEASED, AND LEAD TRACKS LISTED WITHIN THE SUBDIVISION MAY HAVE THEIR OWN UNIQUE SUBDIVISION ID#. ALWAYS REFER TO CURRENT PRINTED COPY OF THE TIMETABLE.
LLLLLLLL = 8 CHARACTERS USE DOT# AT CROSSINGS, AND
WDLLLLLL = USE 'WD' THEN MP# AT WAYSIDE LOCATIONS.
EXAMPLE = 0785WD1801.5UT
HBLLLLLL = USE 'HB' THEN MP# AT HBD SITES.
EXAMPLE = 0100-HB55.62TX
THE MP# MUST USE A DECIMAL POINT TO SEPARATE NUMBERS. FILL WITH PRECEDING DASHES AS REQUIRED.
AA = 2 CHARACTER STATE NAME FOR ALL LOCATIONS. MUST BE 14 CHARACTERS LONG, NO SPACES ALLOWED.

| | |
|---|---|
| SITE IDENTIFIER: SSSSLLLLLLLLAA | 0001-174009SIL |
| OPERATION TO RESUME: | RUN |
| SIGNAL STRENGTH dBm | |
| CARRIER ID | 40 |
| FIRMWARE VERSION | |
| BOOT VERSION: | |
| CMM VERSION: | |
| SERIAL NUMBER | |
| MIN ASSIGNMENT | |
| ESN: (MICROBURST ONLY) | |
| CONFIGURATION NET | MICROBURST |
| SILENCE INTERVAL | 60 MINUTES |
| HEALTHCHECK INTERVAL | EVERY 2 DAYS |
| ALARM DEFER DELAY | 240 MINUTES (4 HOURS) |
| SIGNAL STATUS | GOOD |
| SCADANET STATUS | GOOD |
| CALIBRATION CONSTANT CH1 | |
| CALIBRATION CONSTANT CH2 | |
| CALIBRATION CONSTANT CH3 | |
| CALIBRATION CONSTANT CH4 | |
| CALIBRATION CONSTANT PS | |

FIELD PROVIDES: SAMPLED NOMINAL VOLTAGES, SCADANET STATUS CALIBRATION CONSTANTS, SERIAL NUMBER, AND SIGNAL STATUS.

## CHANNEL SETUP - STANDARD CONFIGURATION 32:XR,GD,GG,Ba

| CHANNEL NORMAL STATE | SENSE (NO/NC) | NAME FUNCTION | RECOGNITION DELAY SECONDS ACTIVE | RECOGNITION DELAY SECONDS NORMAL | RETURN TO NORMAL | REPORTING MODE | ALARM LINKED CHANNEL | ALARM LINKED CRITERIA | EVENT LOGGING ENABLED OPTIONS |
|---|---|---|---|---|---|---|---|---|---|
| POWER FAIL (CH5) | POWER FAIL DETECT NO | PF1n-PK AC POWER FAIL | 7,200 ALARM | 300 NORMAL | ENABLED | ALERT | DISABLED | N/A | ANALOG VALUE SENT |
| CH1 | DIGITAL INPUT NC | CH1-XR XR DOWN TO LONG | 1,800 ALARM | 1 NORMAL | ENABLED | ALERT | DISABLED | N/A | |
| CH2 | DIGITAL INPUT NO | CH2-E0e LIGHT OUT | 120 ALARM | 10 NORMAL | ENABLED | ALERT | DISABLED | N/A | |
| CH3 | DIGITAL INPUT NO | CH3-GTe GATES NOT UP/DOWN | 120 ALARM | 10 NORMAL | ENABLED | ALERT | DISABLED | N/A | DIGITAL EVENTS |
| CH4 STORED NOMINAL VOLTAGE | ANALOG INPUT N/A | CH4-Ba/V BATTERY MONITOR BATTERY LOW | 600 ALARM | 1200 NORMAL | ENABLED | ALERT W/UPDATE | DISABLED | N/A | PF1n-PK CH1-XR CH2-E0e CH3-GTe |
| POWER SOURCE (CH6) | ANALOG INPUT N/A | PS-Ba/V BATTERY MONITOR BATTERY LOW | 600 ALARM | 1200 NORMAL | ENABLED | ALERT W/UPDATE | DISABLED | N/A | |

| ANALOG CHANNEL | USEFUL RANGE VOLTS LOW | USEFUL RANGE VOLTS HIGH | DISPLAYED RANGE VOLTS LOW | DISPLAYED RANGE VOLTS HIGH | RELATIVE ALARM POINT LOW | RELATIVE ALARM POINT HIGH | ABSOLUTE ALARM POINT LOW | ABSOLUTE ALARM POINT HIGH | AUTOMATIC UPDATE INTERVAL | STORED NOMINAL VOLTAGE | SAMPLED NOMINAL VOLTAGE |
|---|---|---|---|---|---|---|---|---|---|---|---|
| | | | | | | | | | | | |
| | | | | | | | | | | | |
| | | | | | | | | | | | |
| CH4 | 0.0 | 30.00 | 0.0 | 30.00 | 81% | 120% | 10.0 | 29.0 | 14 DAYS | 12.69 | |
| POWER SOURCE | 0.0 | 30.00 | 0.0 | 30.00 | 81% | 120% | 10.0 | 29.0 | 14 DAYS | 12.69 | |
| RELAY OUTPUT | NAME RLY-OUT | | ACTIVE SET-UP-OPEN | | NORMAL CLR-DN-CLOSE | | PULSE DURATION | | 15 SECONDS | StdCfg Ver: 2.3.3 REV'D 9-20-02 | |

## MAINTENANCE OPERATIONS

TO START OR ABORT ANY PROCEDURE

1. PRESS THE 'CANCEL' BUTTON FIRST

WHEN RESPONDING TO A CALL, PUT THE CRTU IN THE 'SILENCE ALARMS' MODE

1. PRESS 'SELECT' AND THEN '+ ARROW' BUTTON UNTIL
   DISPLAY: ACTION?
   SILENCE ALARMS
2. PRESS THE 'SELECT' BUTTON TWICE
3. CORRECT PROBLEM AND SIMULATE NORMAL TRAIN MOVEMENT THROUGH THE LOCATION
4. EXAMINE EACH CHANNEL ON THE CRTU
5. PRESS THE '+/- ARROW' BUTTON VERIFY ALL CHANNELS INDICATE A NORMAL STATE NORMAL STATES ARE ON THE CHANNEL SETUP CHART

CLEAR TIMERS, LATCHES AND SEND ALL NORMAL

1. DO STEPS #1 - #5 ABOVE, AND PRESS 'CANCEL'.
2. PRESS 'SELECT' AND THEN '- ARROW' BUTTON UNTIL
   DISPLAY: ACTION?
   SERVICE MODE
3. PRESS 'SELECT' AGAIN TO RESET TIMERS, AND IF
   DISPLAY: SERVICE MODE
   ALL NORMAL
4. PRESS 'SELECT' AGAIN TO CLEAR LATCHES, AND SEND ALL NORMAL. SKIP STEPS #5-#6.
5. HOWEVER, IF ALARMS ARE NOT CLEARED;
   DISPLAY: SERVICE MODE
   ALARMS PENDING/PRESENT
6. PRESS 'CANCEL', CORRECT PROBLEM AND REPEAT STEPS #2 THRU #5 UNTIL ALL NORMAL SENT.

TO CANCEL THE 'SILENCE ALARMS' MODE

1. PRESS 'SELECT' AND THEN '+ ARROW' BUTTON UNTIL
   DISPLAY: ACTION?
   CANCEL SILENCE
2. PRESS THE 'SELECT' BUTTON AGAIN

EXAMINE & SET BATTERY VOLTAGE NOMINAL VALUE

1. PRESS THE '+ ARROW' OR '- ARROW' BUTTON UNTIL THE DESIRED CHANNEL IS DISPLAYED.
   DISPLAY: PS-BA:
   13.83V NORMAL
2. VERIFY THE DISPLAYED READING WITH A DIGITAL VOLTMETER
3. PRESS THE 'SELECT' BUTTON, AND THE CRTU DISPLAY WILL SWITCH BETWEEN CURRENT/SAVED NOMINAL VOLTAGE VALUES.
   DISPLAY: NOMINAL ON #6? (CURRENT)
   13.83
   DISPLAY: SAVED NOMINAL 6 (STORED)
   12.69
4. PRESS THE 'SELECT' BUTTON AND THE CURRENT OR 'NOMINAL ON' VALUE WILL BE SAMPLED AND STORED AS THE 'SAVED NOMINAL' VALUE
5. VERIFY THE 'NOMINAL ON' AND 'SAVED NOMINAL' VALUES ARE EQUIVALENT, REPEAT STEPS #1 THRU #3 & PRESS THE 'CANCEL' BUTTON.

=IN

=OUT

Designed: 4/29/16
INSTALL 3RD MAIN TK. 25TH TO VALE
Rec#: WO#: 31881
IS: RLB/ /ATG/JVJ

Revised: 2/9/16
CHICAGO CREATE PROJECT - B2 PROVO JCT.
Rec#: 21503 WO#: 89793 /MWK
IS: TAH/ATG/ RC /MDF

Revised: 2/8/16
CHICAGO CREATE PROJECT - B2 25TH AVENUE
Rec#: 21503 WO#: 89794 /JJL
IS: TAH/ATG/ RC /MDF

| MODIFICATION LEVEL | |
|---|---|
| Q.A. LAST LEVEL CHK'D. | DG |
| LAST LEVEL MOD. THIS TYP. | DG |
| LAST LEVEL BY DESIGNER. | DS |
| CHANGED FROM TYP.? Y/N | Y |

CIRCUIT MODIFICATIONS ARE NOT TO BE MADE WITHOUT AUTHORITY FROM THE OFFICE OF SIGNAL DESIGN

Date: 02/11/10
Des: RC
Chk: JJL
AFE: 89794

UNION PACIFIC RAILROAD
MELROSE PARK, ILLINOIS
19TH AVENUE
GENEVA SUBDIVISION
Office of AVP Engineering - Signal Omaha, Nebraska

Sh.: 1B
DOT 174 009S
MP: 11.38
ID: GEN1138.1BX

(REV.03.06.01) (CRTUCFG32-2BAT.3X)

GEN1138.1BX 8/11/2016 8:28:34 AM

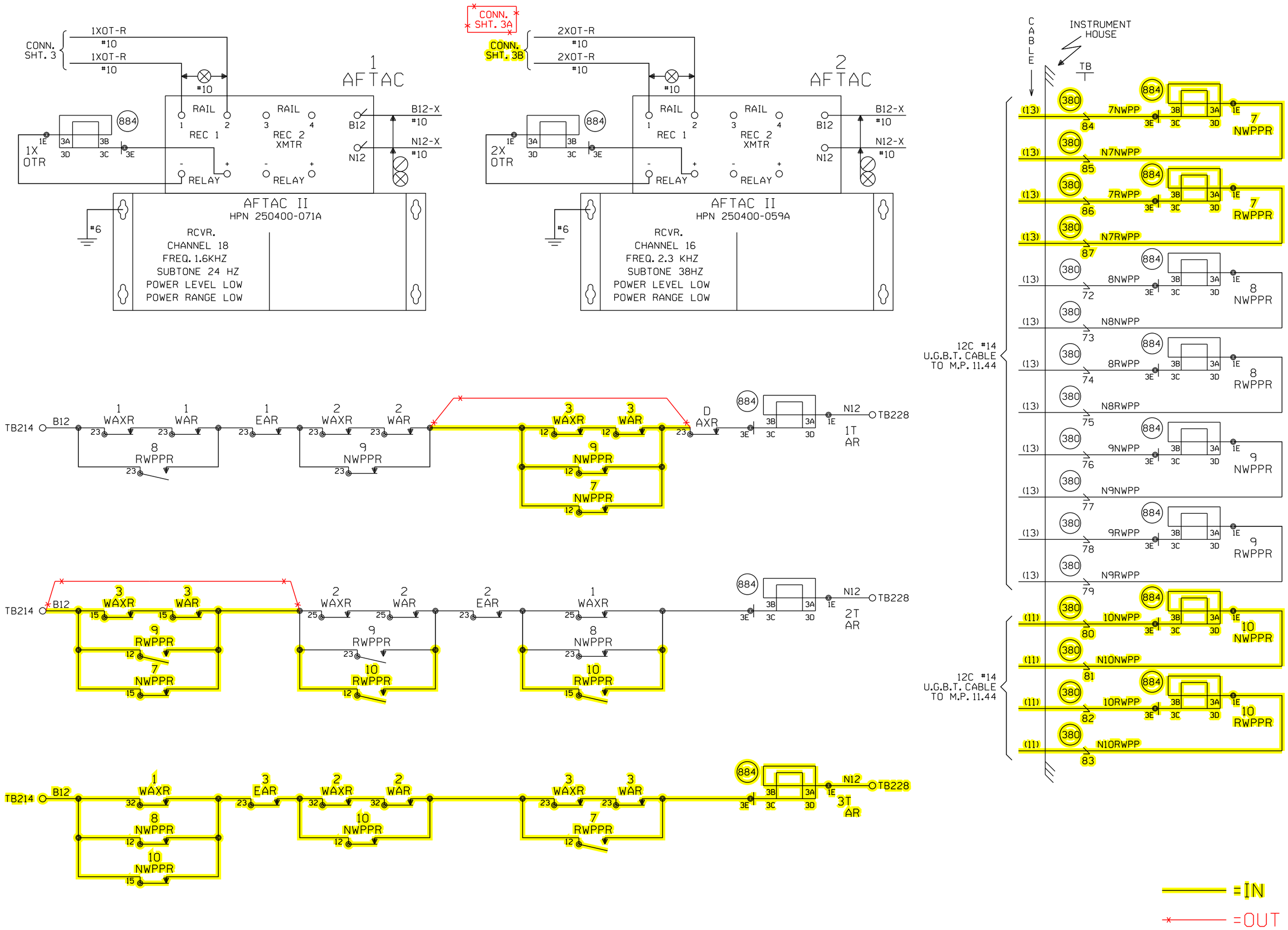


| | | | | | | | | | |
|---|---|---|---|---|---|---|---|---|---|
| | | | Designed: 4/29/16<br>INSTALL 3RD MAIN TK. 25TH TO VALE<br>Rec#: WO#: 31881<br>IS: RLB / / ATG/JVJ | Revised: 2/9/16<br>CHICAGO CREATE PROJECT - B2 PROVO JCT.<br>Rec#: 21503 WO#: 89793 /MWK<br>IS: TAH/ATG/ RC /MDF | Revised: 2/8/16<br>CHICAGO CREATE PROJECT - B2 25TH AVENUE<br>Rec#: 21503 WO#: 89794 /JJL<br>IS: TAH/ATG/ RC /MDF | MODIFICATION LEVEL<br>Q.A. LAST LEVEL CHK'D. DG<br>LAST LEVEL MOD. THIS TYP. DG<br>LAST LEVEL BY DESIGNER. DS<br>CHANGED FROM TYP.? Y/N Y | CIRCUIT MODIFICATIONS ARE NOT TO BE MADE WITHOUT AUTHORITY FROM THE OFFICE OF SIGNAL DESIGN | Date: 02/11/10<br>Des: RC<br>Chk: JJL<br>AFE: 89794 | UNION PACIFIC RAILROAD<br>MELROSE PARK, ILLINOIS<br>19TH AVENUE<br>GENEVA SUBDIVISION<br>Office of AVP Engineering - Signal Omaha, Nebraska | Sh.: 1C<br>DOT 174 009S<br>MP: 11.38<br>ID: GEN1138.1CX |

(REV.03.06.01) (CRTUCFG32-2BAT.3X)

GEN1138.1CX 8/11/2016 8:28:36 AM

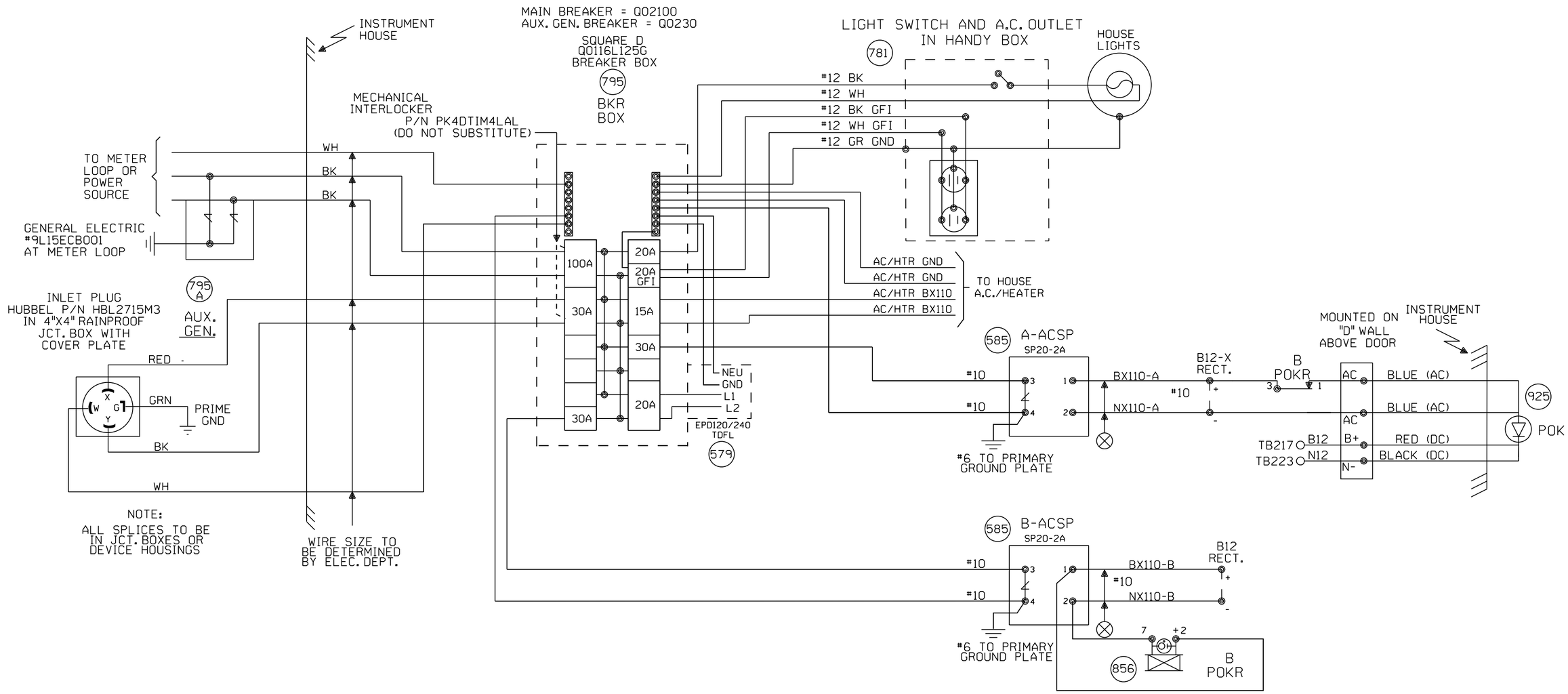


| | | | | | | | | | | | |
|---|---|---|---|---|---|---|---|---|---|---|---|
| | | | | Revised: 2/9/16<br>CHICAGO CREATE<br>PROJECT - B2<br>PROVO JCT.<br>Rec#: 21503 WO#: 89793<br>IS: /MWK<br>TAH/ATG/ RC /MDF | Revised: 2/8/16<br>CHICAGO CREATE<br>PROJECT - B2<br>25TH AVENUE<br>Rec#: 21503 WO#: 89794<br>IS: /JJL<br>TAH/ATG/ RC /MDF | MODIFICATION LEVEL<br>Q.A. LAST LEVEL CHECKED DR<br>LAST LEVEL MOD THIS TYPICAL DR<br>LAST LEVEL BY DESIGNER DS<br>CHANGED FROM TYPICAL? Y<br>REV 02.01.09 4K SEARAC.2 | CIRCUIT MODIFICATIONS ARE NOT TO BE MADE WITHOUT AUTHORITY FROM THE OFFICE OF SIGNAL DESIGN | Date: 02/11/10<br>Des: RC<br>Chk: JJL<br>AFE: 89794 | UNION PACIFIC RAILROAD<br>MELROSE PARK, ILLINOIS<br>19TH AVENUE<br>GENEVA SUBDIVISION<br>Office of AVP Engineering - Signal Omaha, Nebraska | Sh.: 2<br>DOT 174 009S<br>MP: 11.38<br>ID: GEN1138.2X |

GEN1138.2X 8/11/2016 8:28:40 AM

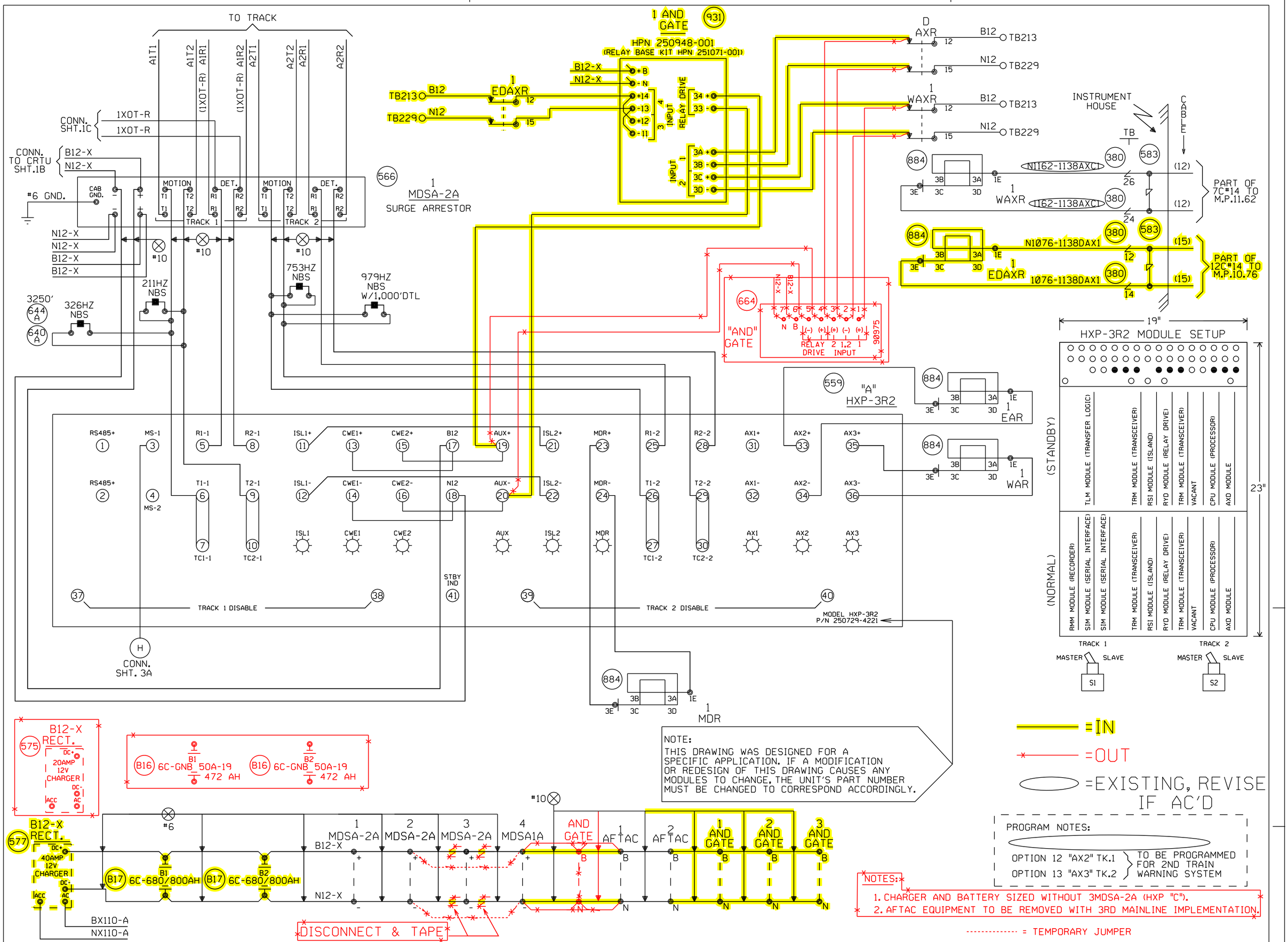


| | | | | | | | | | | |
|---|---|---|---|---|---|---|---|---|---|---|
| | | | Designed: 4/29/16 INSTALL 3RD MAIN TK. 25TH TO VALE Rec#: WO#: 31881 IS: RLB / /ATG/JVJ | Revised: 2/9/16 CHICAGO CREATE PROJECT - B2 PROVO JCT. Rec#: 21503 WO#: 89793 IS: /MWK TAH/ATG/ RC /MDF | Revised: 2/8/16 CHICAGO CREATE PROJECT - B2 25TH AVENUE Rec#: 21503 WO#: 89794 IS: /JJL TAH/ATG/ RC /MDF | MODIFICATION LEVEL<br>Q.A. LAST LEVEL CHK'D. DD<br>LAST LEVEL MOD. THIS TYP. DB<br>LAST LEVEL BY DESIGNER. DS<br>CHANGED FROM TYP.? Y/N Y | CIRCUIT MODIFICATIONS ARE NOT TO BE MADE WITHOUT AUTHORITY FROM THE OFFICE OF SIGNAL DESIGN | Date: 02/11/10<br>Des: RC<br>Chk: JJL<br>AFE: 89794 | UNION PACIFIC RAILROAD<br>MELROSE PARK, ILLINOIS<br>19TH AVENUE<br>GENEVA SUBDIVISION<br>Office of AVP Engineering - Signal Omaha, Nebraska | Sh.: 3<br>DOT 174 009S<br>MP: 11.38<br>ID: GEN1138.3X |

(REV. 01.02.21 ) (HX32TKUG.4)



GEN1138.3X 8/11/2016 8:28:48 AM

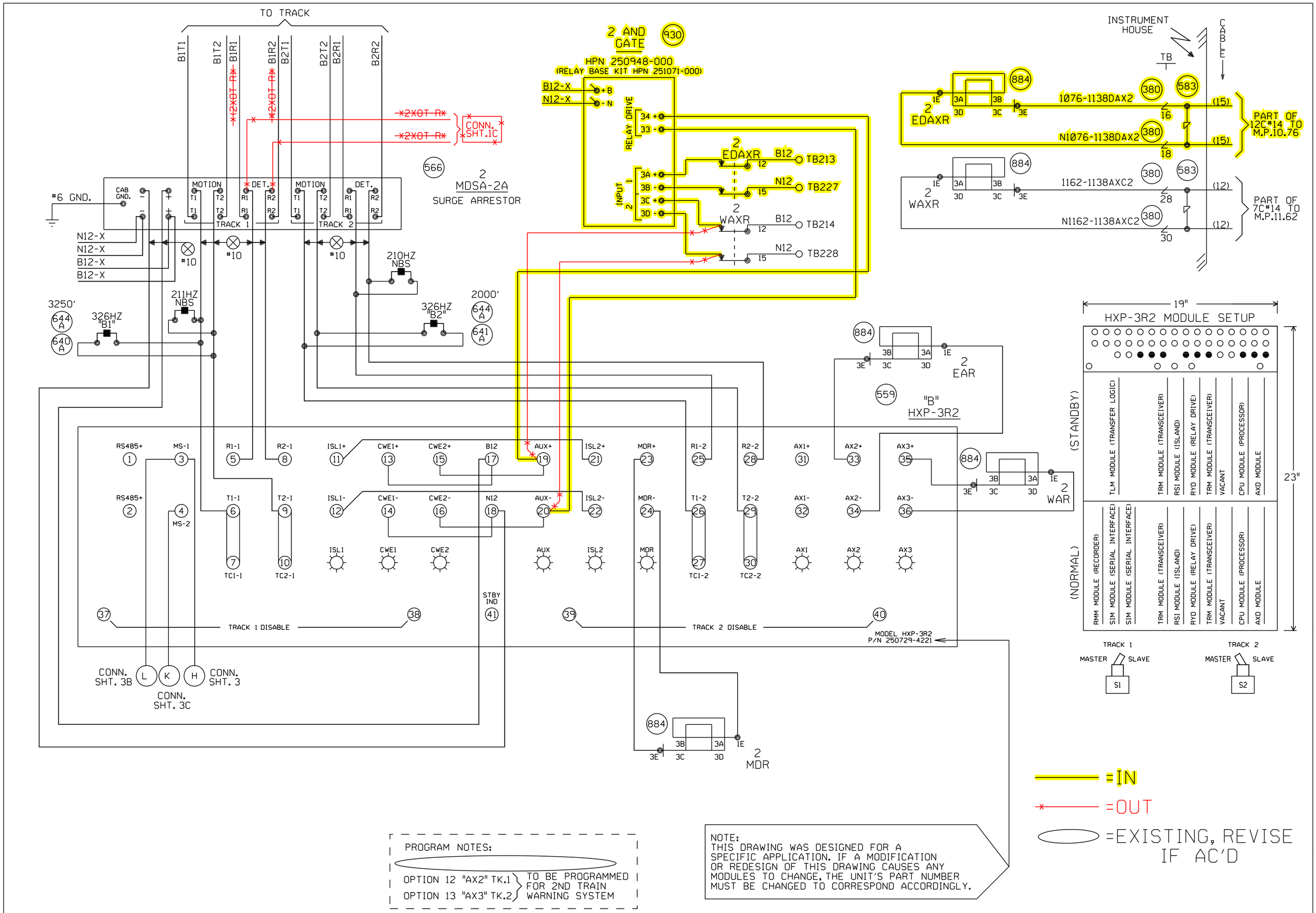


| | | | |
|---|---|---|---|
| Designed: 4/29/16 INSTALL 3RD MAIN TK. 25TH TO VALE | Revised: 2/9/16 CHICAGO CREATE PROJECT - B2 PROVO JCT. | Revised: 2/8/16 CHICAGO CREATE PROJECT - B2 25TH AVENUE | MODIFICATION LEVEL |
| Rec#: WO#: 31881 IS: RLB / / ATG/JVJ | Rec#: 21503 WO#: 89793 IS: TAH/ATG/ RC /MWK /MDF | Rec#: 21503 WO#: 89794 IS: TAH/ATG/ RC /JJL /MDF | Q.A. LAST LEVEL CHK'D. DD<br>LAST LEVEL MOD. THIS TYP. DB<br>LAST LEVEL BY DESIGNER. DS<br>CHANGED FROM TYP.? Y/N Y |

CIRCUIT MODIFICATIONS ARE NOT TO BE MADE WITHOUT AUTHORITY FROM THE OFFICE OF SIGNAL DESIGN

Date: 02/11/10
Des: RC
Chk: JJL
AFE: 89794

**UNION PACIFIC RAILROAD**
MELROSE PARK, ILLINOIS
19TH AVENUE
GENEVA SUBDIVISION
Office of AVP Engineering - Signal Omaha, Nebraska

Sh.: 3A
DOT 174 009S
MP: 11.38
ID: GEN1138.3AX



GEN1138.3AX 8/11/2016 8:28:42 AM

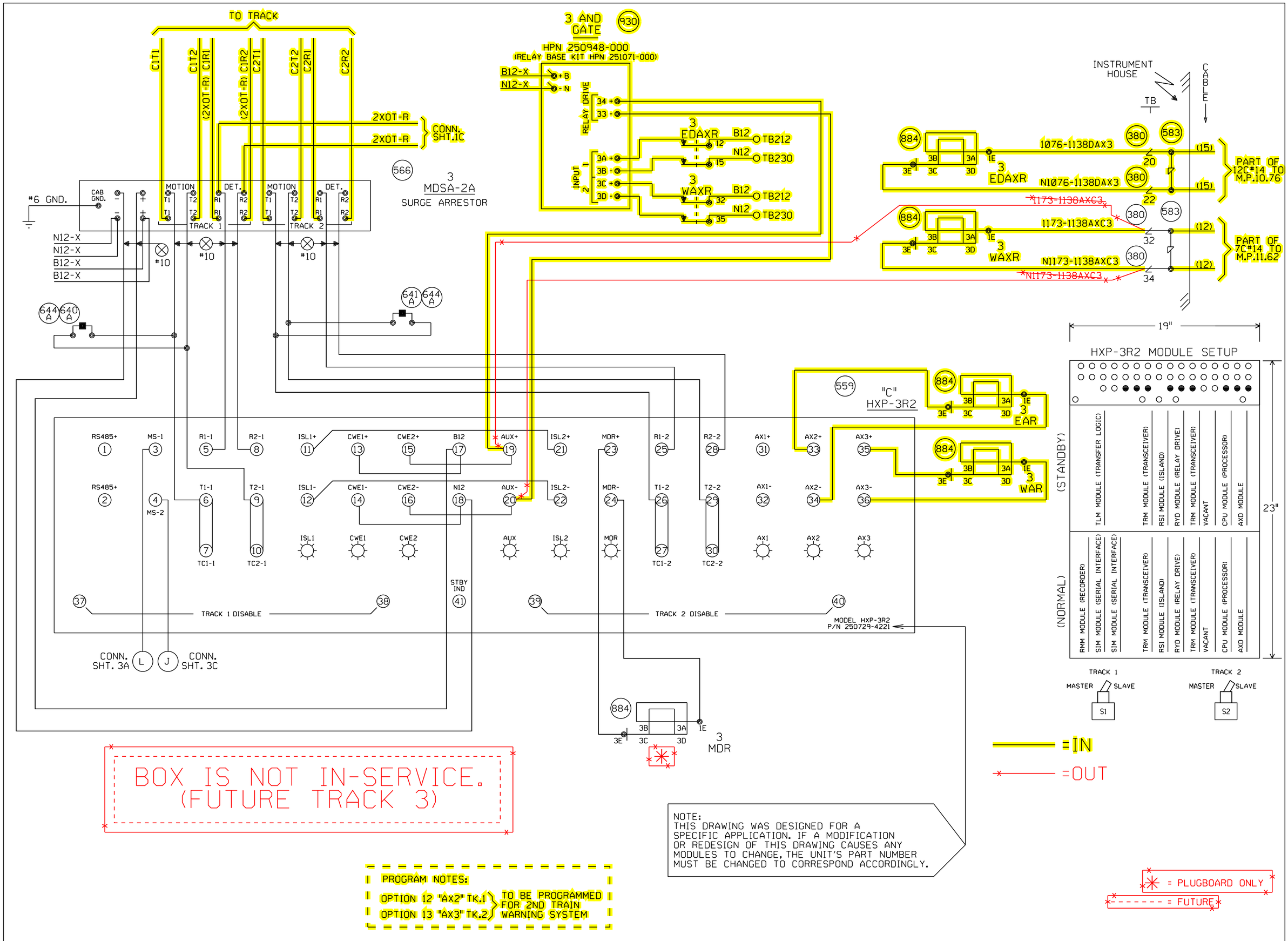


| | | | |
|---|---|---|---|
| Designed: 4/29/16 INSTALL 3RD MAIN TK. 25TH TO VALE | Revised: 2/9/16 CHICAGO CREATE PROJECT - B2 PROVO JCT. | Revised: 2/8/16 CHICAGO CREATE PROJECT - B2 25TH AVENUE | MODIFICATION LEVEL |
| Rec#: WO#: 31881 IS: RLB/ /ATG/JVJ | Rec#: 21503 WO#: 89793 IS: TAH/ATG/ RC /MWK /MDF | Rec#: 21503 WO#: 89794 IS: TAH/ATG/ RC /JJL /MDF | Q.A. LAST LEVEL CHK'D. DD<br>LAST LEVEL MOD. THIS TYP. DB<br>LAST LEVEL BY DESIGNER. DS<br>CHANGED FROM TYP.? Y/N Y |

CIRCUIT MODIFICATIONS ARE NOT TO BE MADE WITHOUT AUTHORITY FROM THE OFFICE OF SIGNAL DESIGN

Date: 02/11/10
Des: RC
Chk: JJL
AFE: 89794

**UNION PACIFIC RAILROAD**
MELROSE PARK, ILLINOIS
19TH AVENUE
GENEVA SUBDIVISION
Office of AVP Engineering - Signal Omaha, Nebraska

Sh.: 3B
DOT 174 009S
MP: 11.38
ID: GEN1138.3BX

(REV. 01.02.21) (HX32TKUG.5)



GEN1138.3BX 8/11/2016 8:28:44 AM

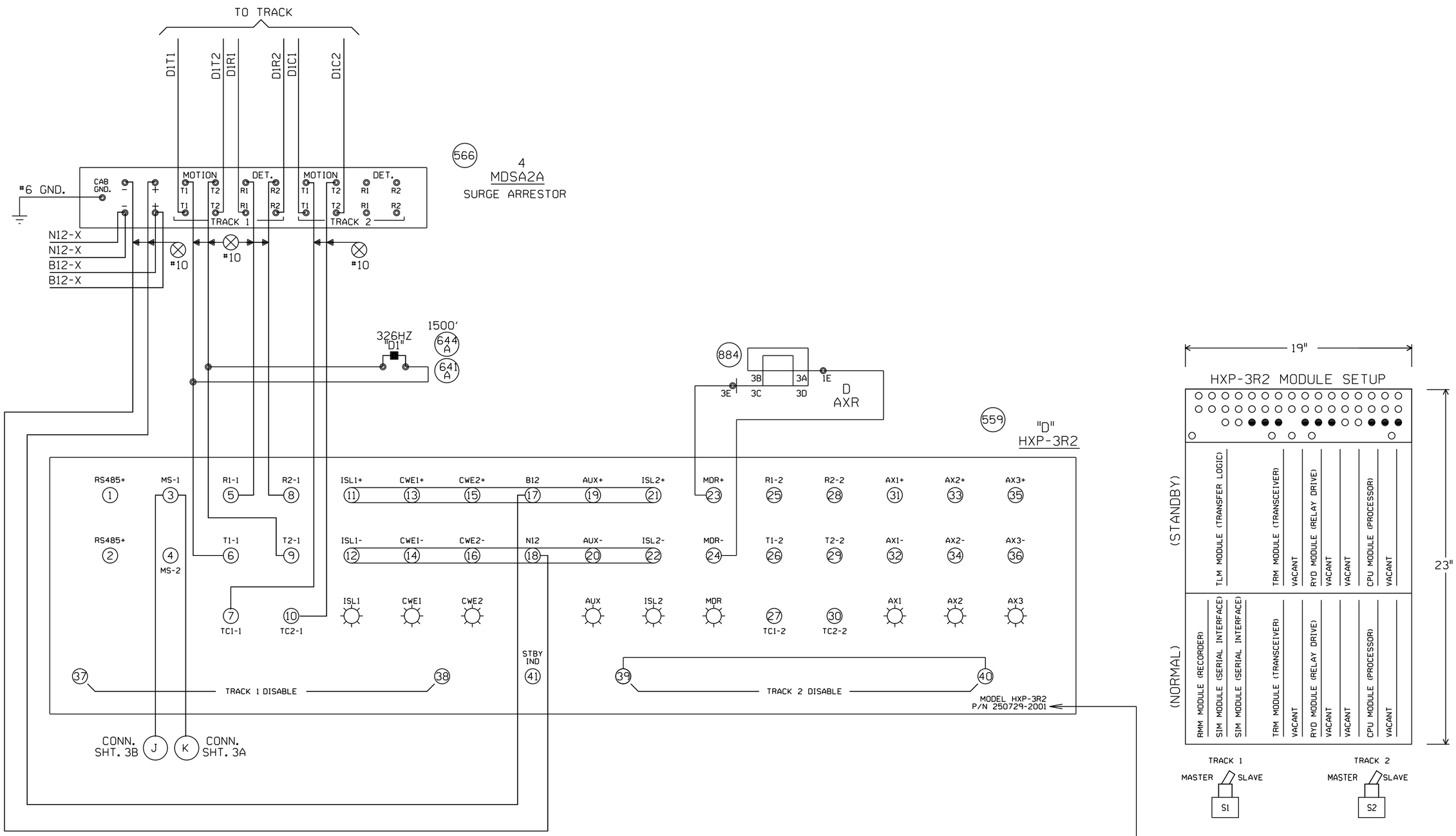


PROGRAM NOTE:

OPTION 17 MDR-AX USE ON TK. 1

NOTE:
THIS DRAWING WAS DESIGNED FOR A SPECIFIC APPLICATION. IF A MODIFICATION OR REDESIGN OF THIS DRAWING CAUSES ANY MODULES TO CHANGE, THE UNIT'S PART NUMBER MUST BE CHANGED TO CORRESPOND ACCORDINGLY.

| | | | |
|---|---|---|---|
| Revised: 2/9/16 | Revised: 2/8/16 | MODIFICATION LEVEL | |
| CHICAGO CREATE PROJECT - B2 PROVO JCT. | CHICAGO CREATE PROJECT - B2 25TH AVENUE | Q.A. LAST LEVEL CHK'D. | DD |
| | | LAST LEVEL MOD. THIS TYP. | DB |
| | | LAST LEVEL BY DESIGNER. | DS |
| Rec#: 21503 WO#: 89793 IS: TAH/ATG/ RC /MDF /MWK | Rec#: 21503 WO#: 89794 IS: TAH/ATG/ RC /MDF /JJL | CHANGED FROM TYP.? Y/N | Y |

CIRCUIT MODIFICATIONS ARE NOT TO BE MADE WITHOUT AUTHORITY FROM THE OFFICE OF SIGNAL DESIGN

Date: 02/11/10
Des: RC
Chk: JJL
AFE: 89794

UNION PACIFIC RAILROAD
MELROSE PARK, ILLINOIS
19TH AVENUE
GENEVA SUBDIVISION
Office of AVP Engineering - Signal Omaha, Nebraska

Sh.: 3C
DOT 174 009S
MP: 11.38
ID: GEN1138.3CX



GEN1138.3CX 8/11/2016 8:28:46 AM

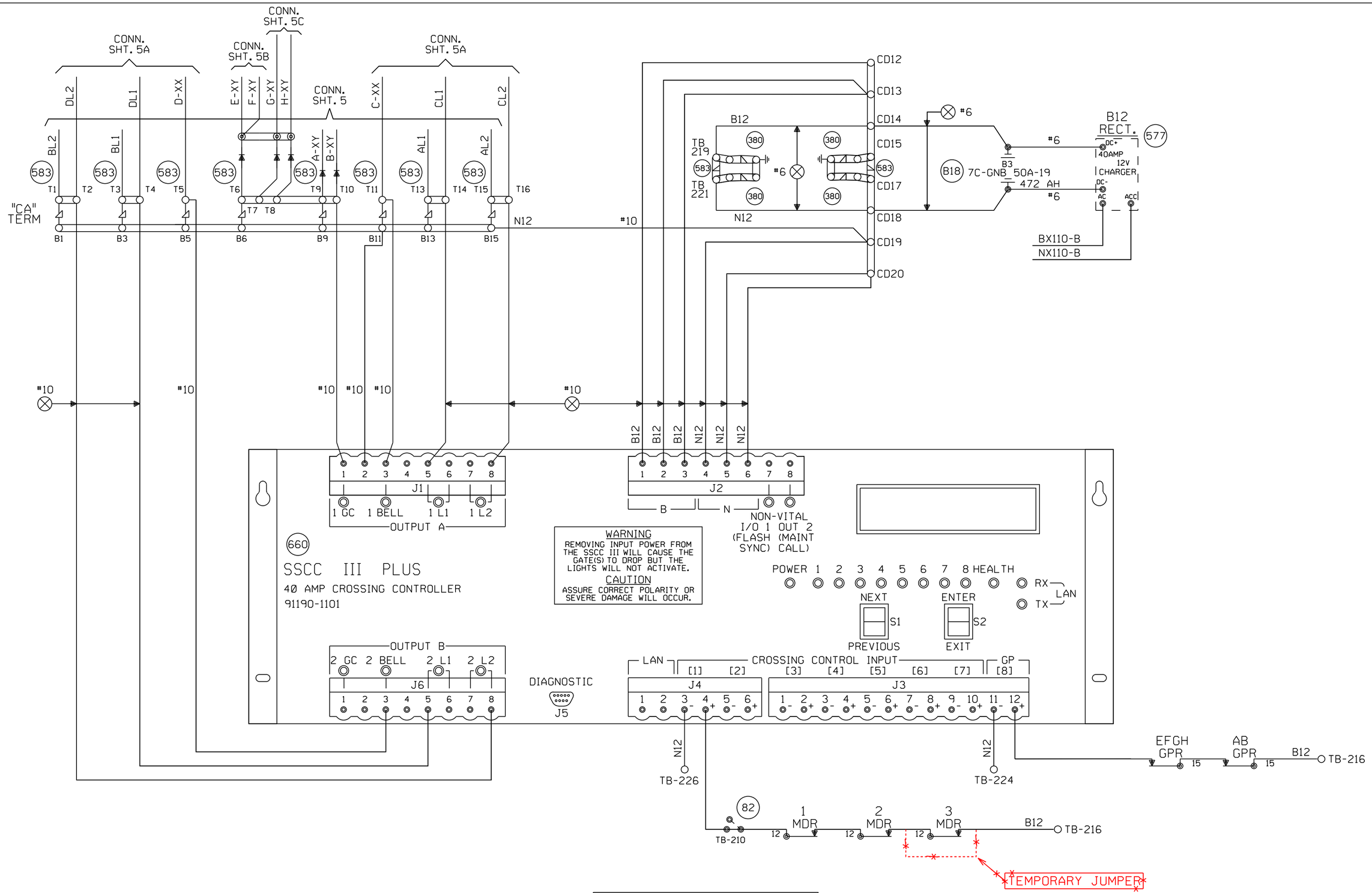


## IMPORTANT

THE PROGRAM MCF AND ID LISTED BELOW MUST BE ENTERED IN THE PROGRAM SETUP ROUTINE FOR THIS SOLID STATE CROSSING CONTROLLER TO FUNCTION PROPERLY.

PROGRAM MCF: BASICPLS

PROGRAM ID: 087

EXTERNAL CROSSING CONTROLLER PROGRAM NOTE:

#1) PROGRAM INPUT 2-7 TO DISABLED

| | | | |
|---|---|---|---|
| Designed: 4/29/16 INSTALL 3RD MAIN TK. 25TH TO VALE | Revised: 2/9/16 CHICAGO CREATE PROJECT - B2 PROVO JCT. | Revised: 2/8/16 CHICAGO CREATE PROJECT - B2 25TH AVENUE | MODIFICATION LEVEL |
| Rec#: WO#: 31881 IS: RLB / / /ATG/JVJ | Rec#: 21503 WO#: 89793 IS: /MWK TAH/ATG/ RC /MDF | Rec#: 21503 WO#: 89794 IS: /JJL TAH/ATG/ RC /MDF | Q.A. LAST LEVEL CHK'D. DH<br>LAST LEVEL MOD. THIS TYP. DH<br>LAST LEVEL BY DESIGNER. DS<br>CHANGED FROM TYP.? Y/N Y |

CIRCUIT MODIFICATIONS ARE NOT TO BE MADE WITHOUT AUTHORITY FROM THE OFFICE OF SIGNAL DESIGN

Date: 02/11/10
Des: RC
Chk: JJL
AFE: 89794

**UNION PACIFIC RAILROAD**
MELROSE PARK, ILLINOIS
19TH AVENUE
GENEVA SUBDIVISION
Office of AVP Engineering - Signal Omaha, Nebraska

Sh.: 4
DOT 174 009S
MP: 11.38
ID: GEN1138.4X

(REV. 01.01.04) (SSCCGF.5)

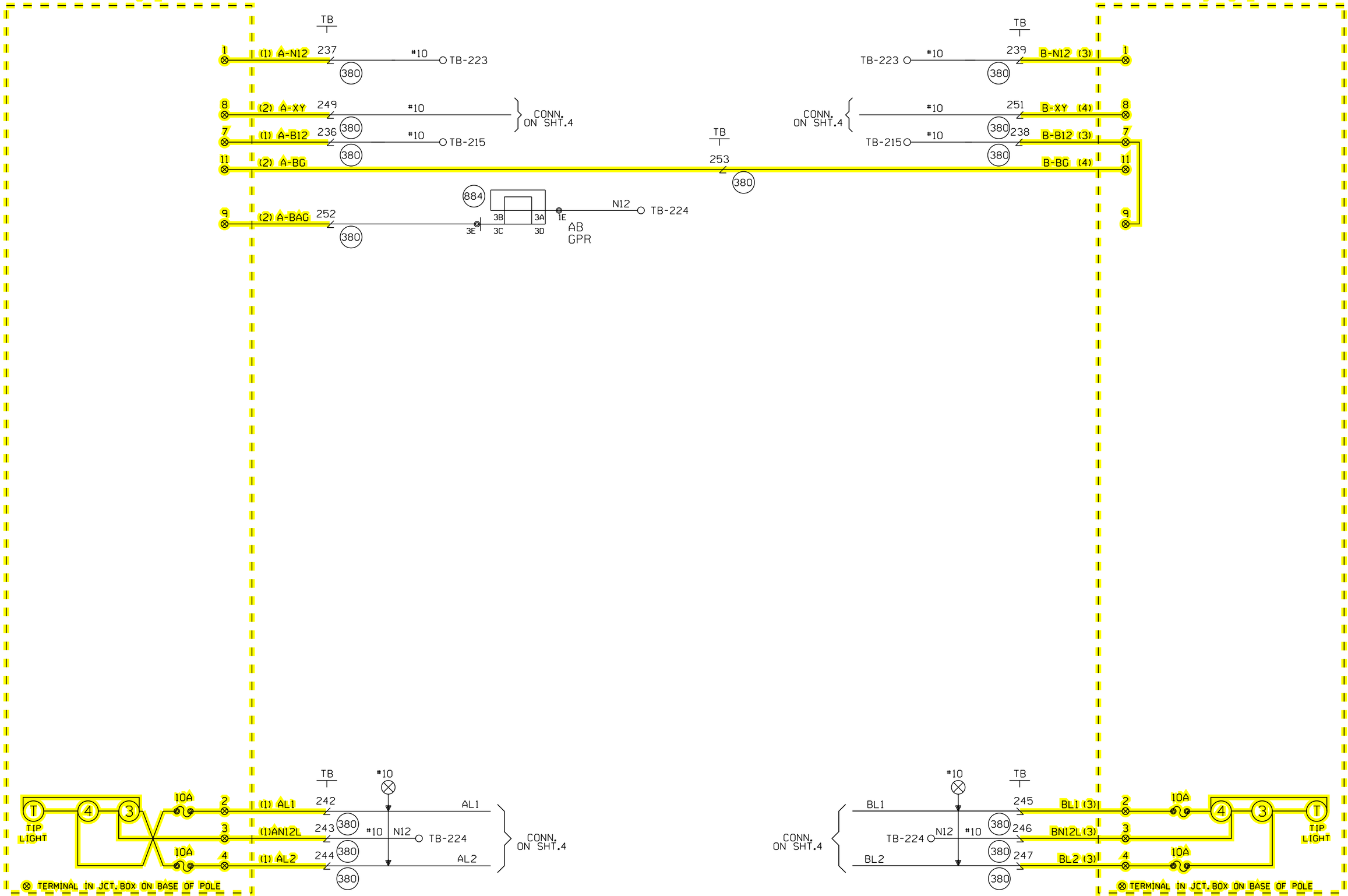


CABLE TABULATION

CABLE NO. 1 5C. NO.6 U.G.B.T. TO GATE A
CABLE NO. 2 7C. NO.14 U.G.B.T. TO GATE A
CABLE NO. 3 5C. NO.6 U.G.B.T. TO GATE B
CABLE NO. 4 7C. NO.14 U.G.B.T. TO GATE B

**REDRAWN**

Designed: 4/29/16
INSTALL 3RD MAIN TK. 25TH TO VALE
Rec*: WO*: 31881
IS: RLB/ATG/JVJ

| MODIFICATION LEVEL | |
|---|---|
| O.A. LAST LEVEL CHECKED | DU |
| LAST LEVEL MOD THIS TYPICAL | DU |
| LAST LEVEL BY DESIGNER | DU |
| CHANGED FROM TYPICAL? | Y |

REV 01.24.11 4K GFCTYP.5

CIRCUIT MODIFICATIONS ARE NOT TO BE MADE WITHOUT AUTHORITY FROM THE OFFICE OF SIGNAL DESIGN

Date: 04/29/16
Des: ATG
Chk: RLB
AFE: 31881

UNION PACIFIC RAILROAD
MELROSE PARK, IL
19TH AVENUE
GENEVA SUBDIVISION
Office of AVP Engineering - Signal Omaha, Nebraska

Sh.: 5
DOT 174009S
MP: 11.38
ID: GEN1138.5X

GEN1138.5X 8/11/2016 8:28:59 AM

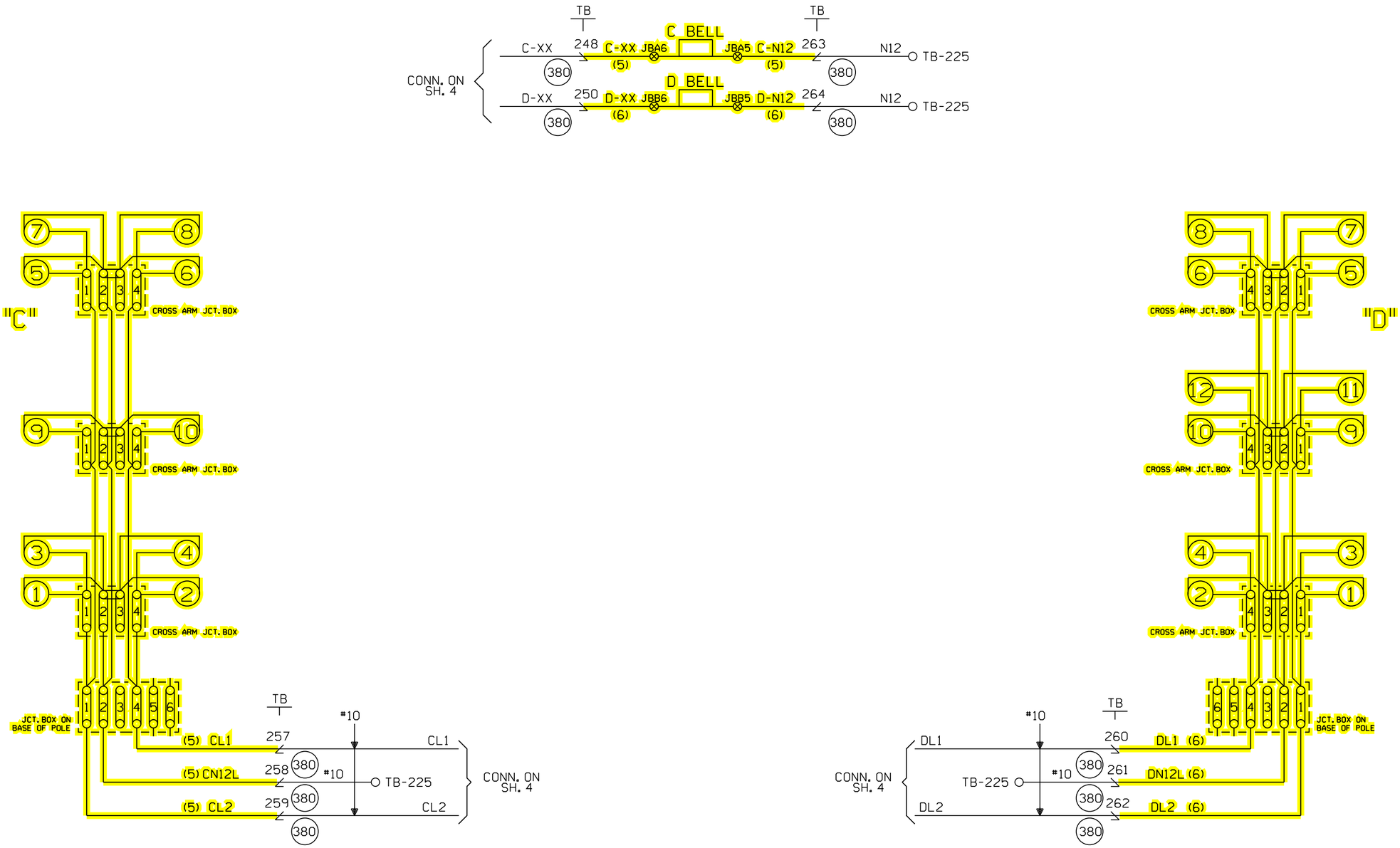


CABLE TABULATION

CABLE NO. 5 5C. NO. 6 U.G.B.T. TO GATE C
CABLE NO. 6 5C. NO. 6 U.G.B.T. TO GATE D

REDRAWN

| | | | | | | | | | | | |
|---|---|---|---|---|---|---|---|---|---|---|---|
| | | | | | Designed: 4/29/16<br>INSTALL 3RD MAIN TK. 25TH TO VALE<br>Rec#: IS: WO#: 31881 RLB/ ATG/JVJ | MODIFICATION LEVEL | | CIRCUIT MODIFICATIONS ARE NOT TO BE MADE WITHOUT AUTHORITY FROM THE OFFICE OF SIGNAL DESIGN | Date: 04/29/16<br>Des: ATG<br>Chk: RLB<br>AFE: 31881 | UNION PACIFIC RAILROAD<br>MELROSE PARK, IL<br>19TH AVENUE<br>GENEVA SUBDIVISION<br>Office of AVP Engineering - Signal Omaha, Nebraska | Sh.: 5A<br>DOT 174009S<br>MP: 11.38<br>ID: GEN1138.5AX |
| | | | | | | Q. A. LAST LEVEL CHECKED | DU | | | | |
| | | | | | | LAST LEVEL MOD THIS TYPICAL | DU | | | | |
| | | | | | | LAST LEVEL BY DESIGNER | DU | | | | |
| | | | | | | CHANGED FROM TYPICAL? | Y | | | | |
| | | | | | | REV 01.24.11 4K CGTYP.6 | | | | | |

GEN1138.5AX 8/11/2016 8:28:52 AM

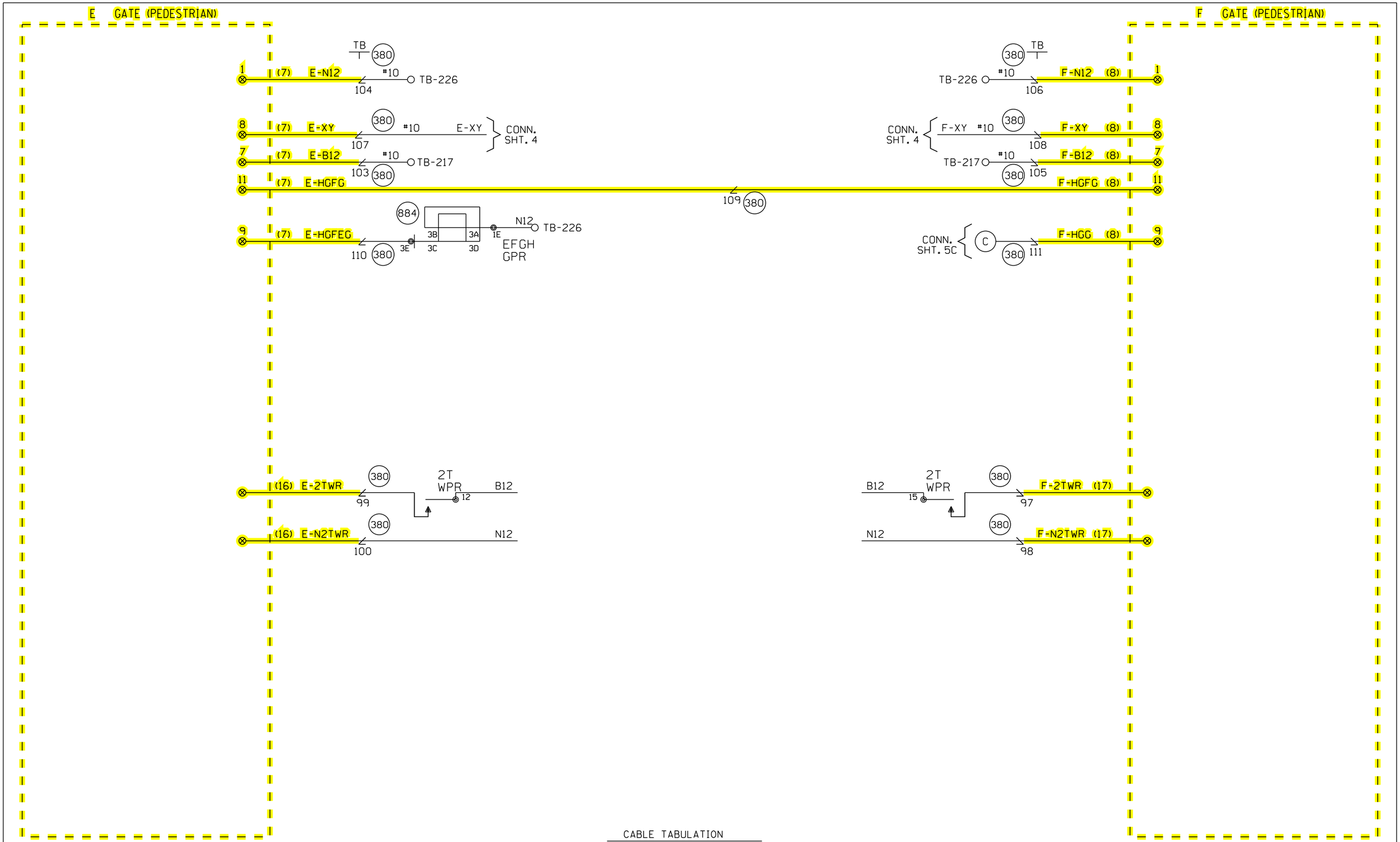


CABLE TABULATION

CABLE NO. 7 5C. NO.6 U.G.B.T. TO GATE E
CABLE NO. 8 5C. NO.6 U.G.B.T. TO GATE F
CABLE NO. 9 5C. NO.6 U.G.B.T. TO GATE G
CABLE NO.10 5C. NO.6 U.G.B.T. TO GATE H
CABLE NO.11 12C. NO.14 U.G.B.T. TO M.P.11.44
CABLE NO.12 7C. NO.14 U.G.B.T. TO M.P.11.62
CABLE NO.13 12C. NO.14 U.G.B.T. TO M.P.11.44
CABLE NO.14 U.G.B.T. TO 2ND TRAIN WARNING SYSTEM.
CABLE NO.15 12C. NO.14 U.G.B.T. TO M.P.10.76
CABLE NO.16 7C. NO.14 U.G.B.T. TO GATE E
CABLE NO.17 7C. NO.14 U.G.B.T. TO GATE F
CABLE NO.18 7C. NO.14 U.G.B.T. TO GATE G
CABLE NO.19 7C. NO.14 U.G.B.T. TO GATE H

**REDRAWN**

Designed: 4/29/16
INSTALL 3RD MAIN TK. 25TH TO VALE
Rec#: WO#: 31881
IS: RLB/ /ATG/JVJ

| MODIFICATION LEVEL | |
|---|---|
| O.A. LAST LEVEL CHECKED | DU |
| LAST LEVEL MOD THIS TYPICAL | DU |
| LAST LEVEL BY DESIGNER | DU |
| CHANGED FROM TYPICAL? | Y |

REV 01.24.11 4K GFCTYP.5

CIRCUIT MODIFICATIONS ARE NOT TO BE MADE WITHOUT AUTHORITY FROM THE OFFICE OF SIGNAL DESIGN

Date: 04/29/16
Des: ATG
Chk: RLB
AFE: 31881

UNION PACIFIC RAILROAD
MELROSE PARK, IL
19TH AVENUE
GENEVA SUBDIVISION
Office of AVP Engineering - Signal Omaha, Nebraska

Sh.: 5B
DOT 174009S
MP: 11.38
ID: GEN1138.5BX

GEN1138.5BX 8/11/2016 8:28:55 AM

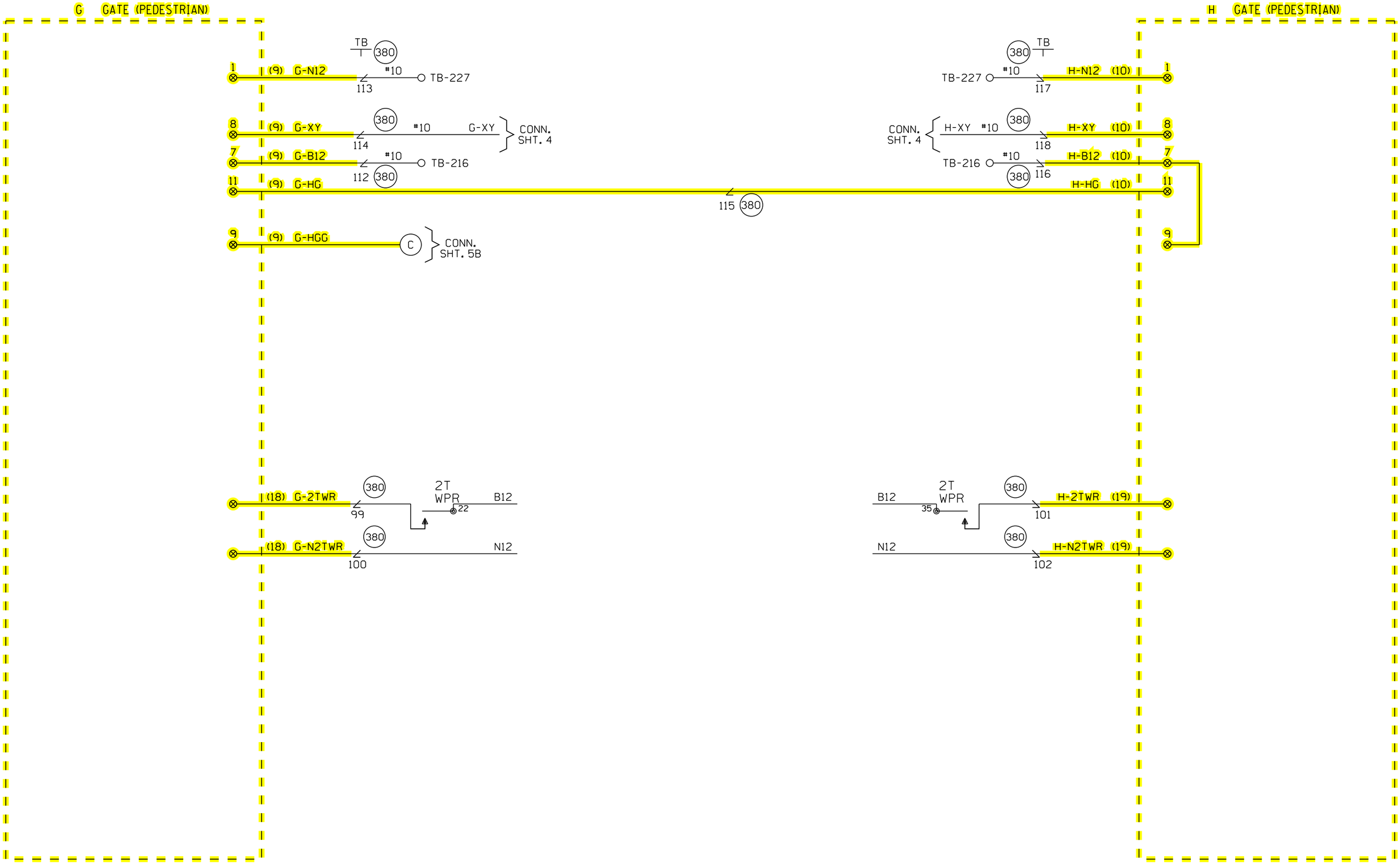


REDRAWN

| | | | | | | | | | | | |
|---|---|---|---|---|---|---|---|---|---|---|---|
| | | | | | Designed: 4/29/16<br>INSTALL 3RD MAIN TK. 25TH TO VALE<br>Rec#: WO#: 31881<br>IS: RLB/ ATG/JVJ | MODIFICATION LEVEL | | CIRCUIT MODIFICATIONS ARE NOT TO BE MADE WITHOUT AUTHORITY FROM THE OFFICE OF SIGNAL DESIGN | Date: 04/29/16<br>Des: ATG<br>Chk: RLB<br>AFE: 31881 | UNION PACIFIC RAILROAD<br>MELROSE PARK, IL<br>19TH AVENUE<br>GENEVA SUBDIVISION<br>Office of AVP Engineering - Signal Omaha, Nebraska | Sh.: 5C<br>DOT 174009S<br>MP: 11.38<br>ID: GEN1138.5CX |
| | | | | | | Q.A. LAST LEVEL CHECKED | DU | | | | |
| | | | | | | LAST LEVEL MOD THIS TYPICAL | DU | | | | |
| | | | | | | LAST LEVEL BY DESIGNER | DU | | | | |
| | | | | | | CHANGED FROM TYPICAL?<br>REV 01.24.11 4K GFCTYP.5 | Y | | | | |

GEN1138.5CX 8/11/2016 8:28:57 AM

## WCH 3593-E

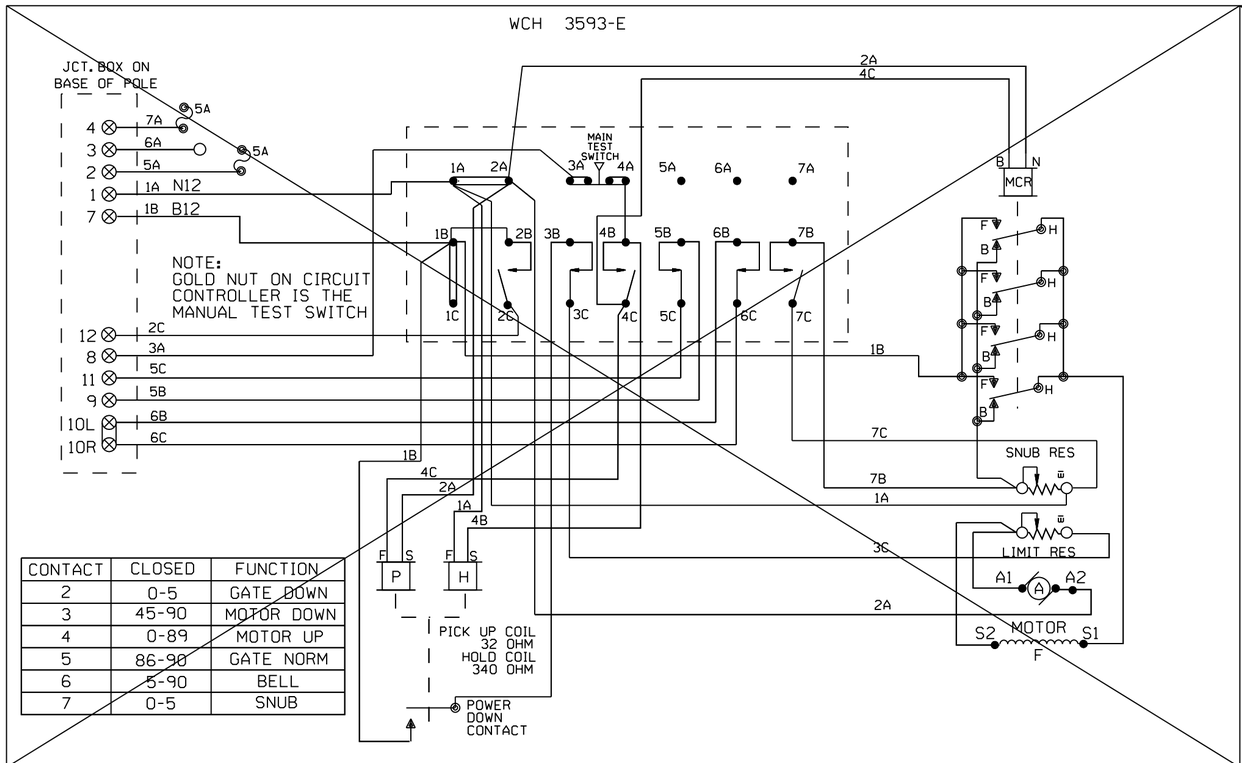


| CONTACT | CLOSED | FUNCTION |
|---|---|---|
| 2 | 0-5 | GATE DOWN |
| 3 | 45-90 | MOTOR DOWN |
| 4 | 0-89 | MOTOR UP |
| 5 | 86-90 | GATE NORM |
| 6 | 5-90 | BELL |
| 7 | 0-5 | SNUB |

## WCH 3597-E

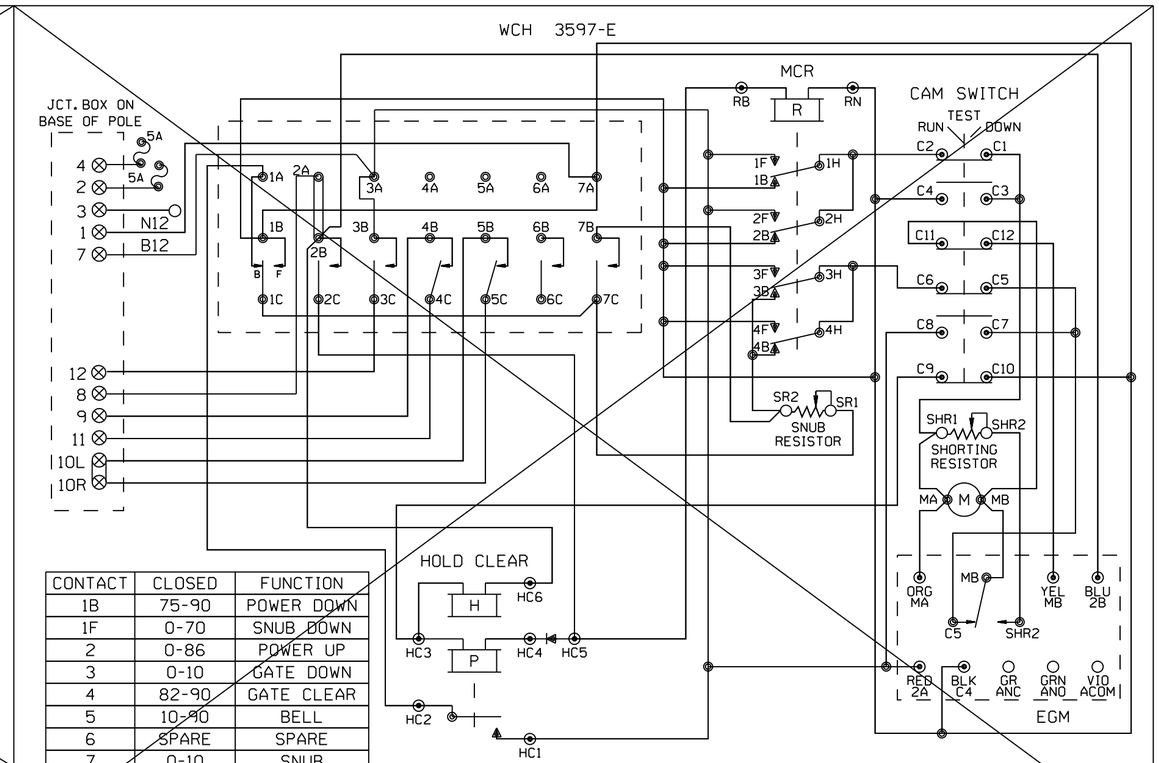


| CONTACT | CLOSED | FUNCTION |
|---|---|---|
| 1B | 75-90 | POWER DOWN |
| 1F | 0-70 | SNUB DOWN |
| 2 | 0-86 | POWER UP |
| 3 | 0-10 | GATE DOWN |
| 4 | 82-90 | GATE CLEAR |
| 5 | 10-90 | BELL |
| 6 | SPARE | SPARE |
| 7 | 0-10 | SNUB |

## WCH 3597-RB

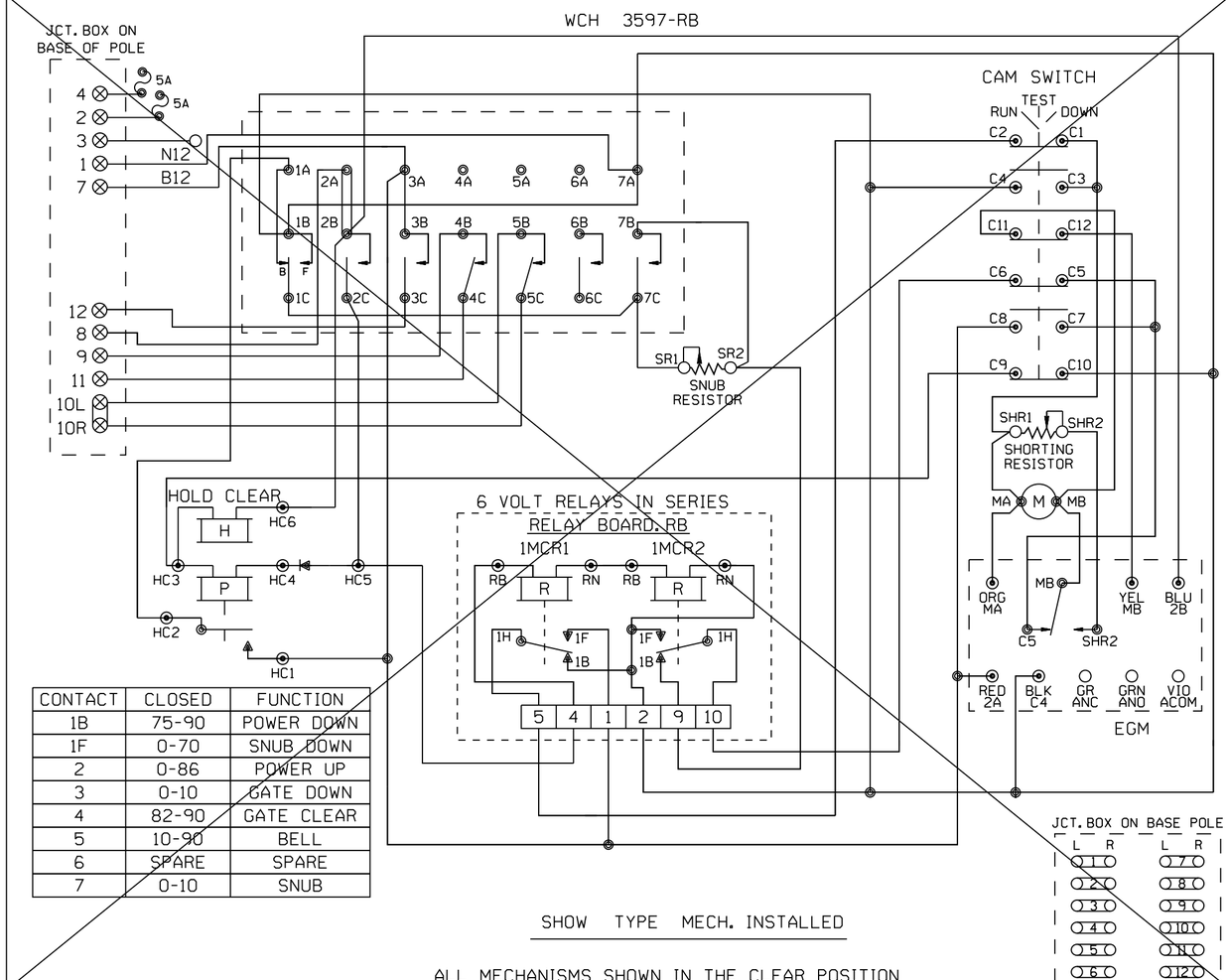


| CONTACT | CLOSED | FUNCTION |
|---|---|---|
| 1B | 75-90 | POWER DOWN |
| 1F | 0-70 | SNUB DOWN |
| 2 | 0-86 | POWER UP |
| 3 | 0-10 | GATE DOWN |
| 4 | 82-90 | GATE CLEAR |
| 5 | 10-90 | BELL |
| 6 | SPARE | SPARE |
| 7 | 0-10 | SNUB |

SHOW TYPE MECH. INSTALLED

ALL MECHANISMS SHOWN IN THE CLEAR POSITION

## SAFETRAN S-60

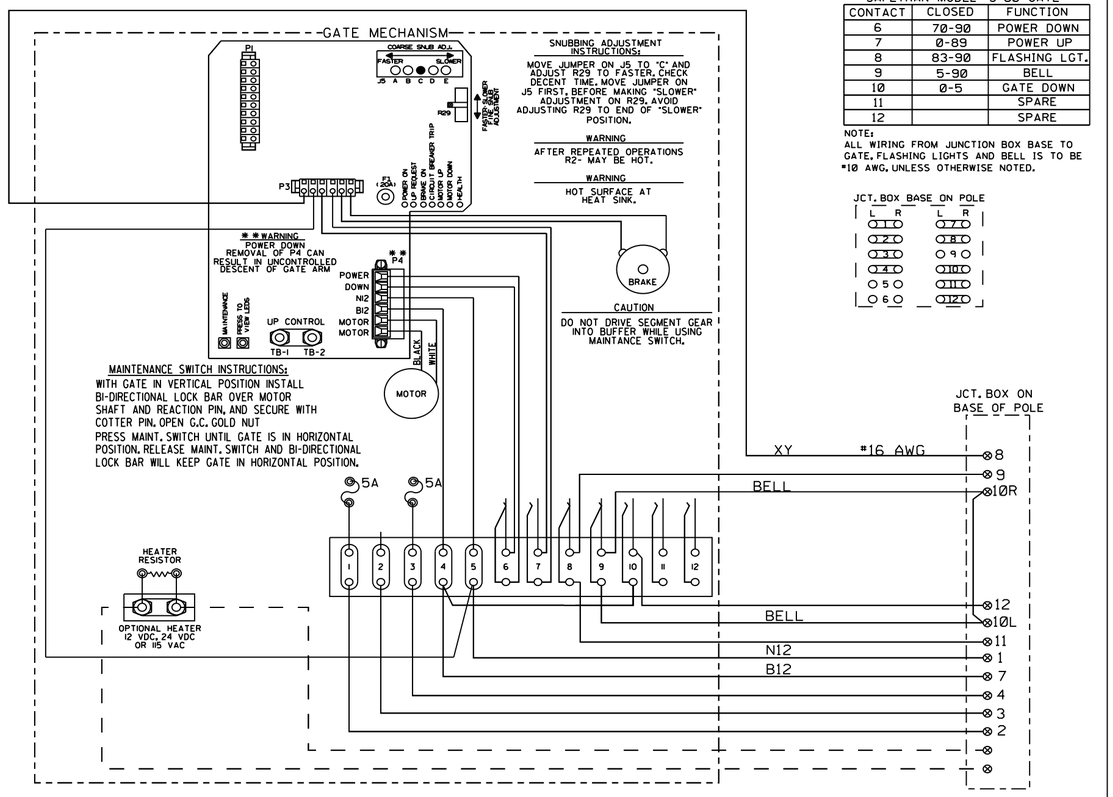


SAFETRAN MODEL "S-60" GATE

| CONTACT | CLOSED | FUNCTION |
|---|---|---|
| 6 | 70-90 | POWER DOWN |
| 7 | 0-89 | POWER UP |
| 8 | 83-90 | FLASHING LGT. |
| 9 | 5-90 | BELL |
| 10 | 0-5 | GATE DOWN |
| 11 | | SPARE |
| 12 | | SPARE |

NOTE:
ALL WIRING FROM JUNCTION BOX BASE TO GATE, FLASHING LIGHTS AND BELL IS TO BE #10 AWG, UNLESS OTHERWISE NOTED.

JCT. BOX BASE ON POLE

FOR WIRING GATES "A", "B", "E", "F", "G", & "H"

**NEW SHEET**

Designed: 4/29/16

INSTALL 3RD MAIN TK. 25TH TO VALE

Rec'd: IS: WO#: 31881 RLB / /ATG/JVJ

| MODIFICATION LEVEL | |
|---|---|
| O.A. LAST LEVEL CHECKED | DU |
| LAST LEVEL MOD THIS TYPICAL | DU |
| LAST LEVEL BY DESIGNER | DU |
| CHANGED FROM TYPICAL? | N |

REV 01.24.11 4K GWIRING.7

CIRCUIT MODIFICATIONS ARE NOT TO BE MADE WITHOUT AUTHORITY FROM THE OFFICE OF SIGNAL DESIGN

Date: 04/29/16
Des: ATG
Chk: RLB
AFE: 31881

**UNION PACIFIC RAILROAD**

MELROSE PARK, IL
19TH AVENUE
GENEVA SUBDIVISION

Office of AVP Engineering - Signal — Omaha, Nebraska

Sh.: 6
DOT 174009S
MP: 11.38
ID: GEN1138.6X

GEN1138.6X 8/11/2016 8:29:01 AM

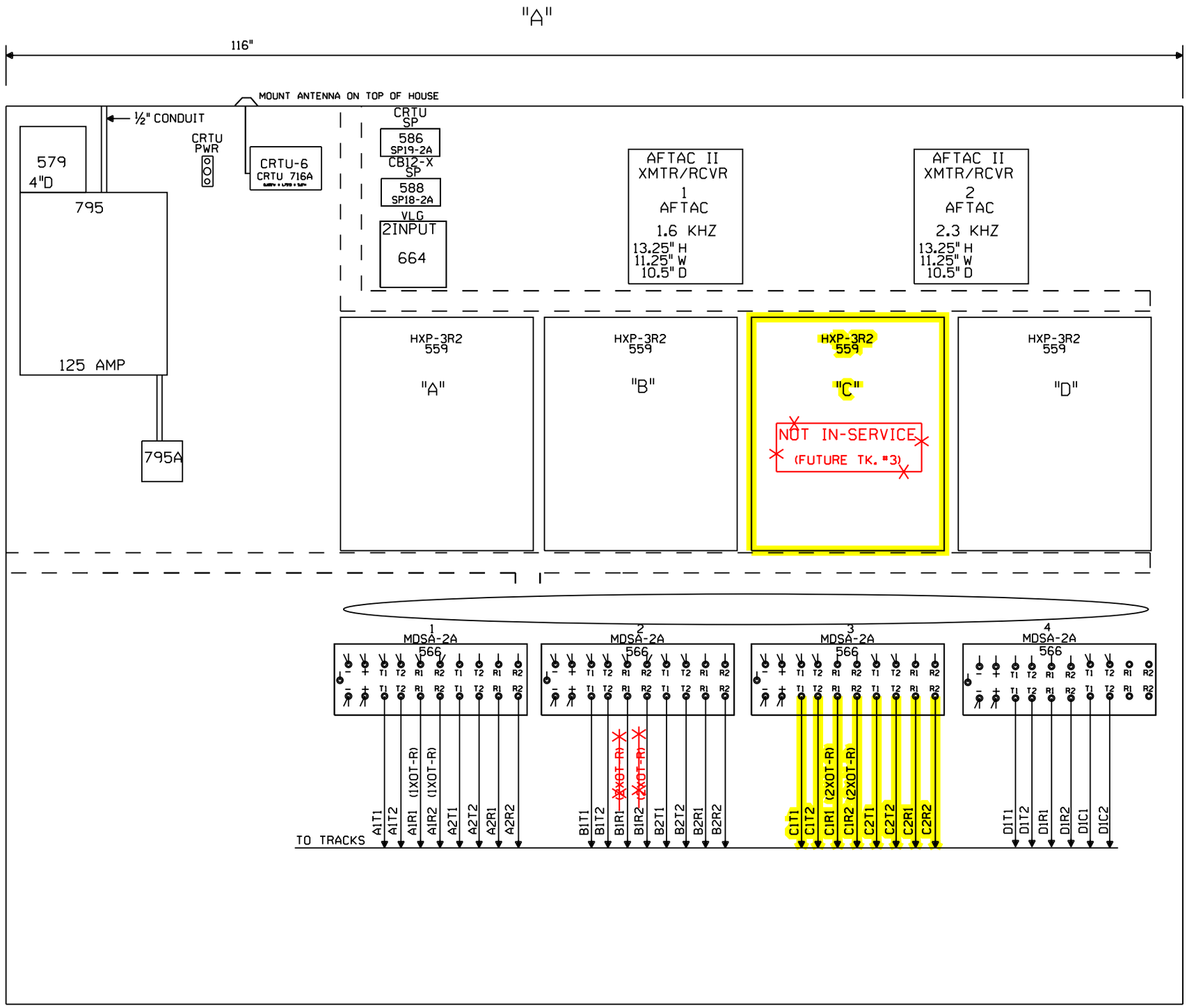


NOTE: ALL DIMENSIONS SHOWN ARE APPROXIMATE.

0 1 2 3 4 FEET

SCALE: 1.5 INCHES = 1 FOOT

=IN

=OUT

=EXISTING, REVISE IF AC'D

= FUTURE

| | | | | | | | | | |
|---|---|---|---|---|---|---|---|---|---|
| Designed: 4/29/16<br>INSTALL 3RD MAIN TK. 25TH TO VALE<br>Rec#: WO#: 31881<br>IS: RLB/ /ATG/JVJ | Revised: 2/9/16<br>CHICAGO CREATE PROJECT - B2 PROVO JCT.<br>Rec#: 21503 WO#: 89793<br>IS: /MWK TAH/ATG/ RC /MDF | Revised: 2/8/16<br>CHICAGO CREATE PROJECT - B2 25TH AVENUE<br>Rec#: 21503 WO#: 89794<br>IS: /JJL TAH/ATG/ RC /MDF | MODIFICATION LEVEL<br>Q.A. LAST LEVEL CHECKED DQ<br>LAST LEVEL MOD THIS TYPICAL DQ<br>LAST LEVEL BY DESIGNER DS<br>CHANGED FROM TYPICAL? Y<br>REV 02/01/08 MICROEEOS.14 | CIRCUIT MODIFICATIONS ARE NOT TO BE MADE WITHOUT AUTHORITY FROM THE OFFICE OF SIGNAL DESIGN | Date: 02/11/10<br>Des: RC<br>Chk: JJL<br>AFE: 89794 | UNION PACIFIC RAILROAD<br>MELROSE PARK, ILLINOIS<br>19TH AVENUE<br>GENEVA SUBDIVISION<br>Office of AVP Engineering - Signal Omaha, Nebraska | Sh.: 7<br>DOT 174 009S<br>MP: 11.38<br>ID: GEN1138.7X |

GEN1138.7X 8/11/2016 8:29:03 AM

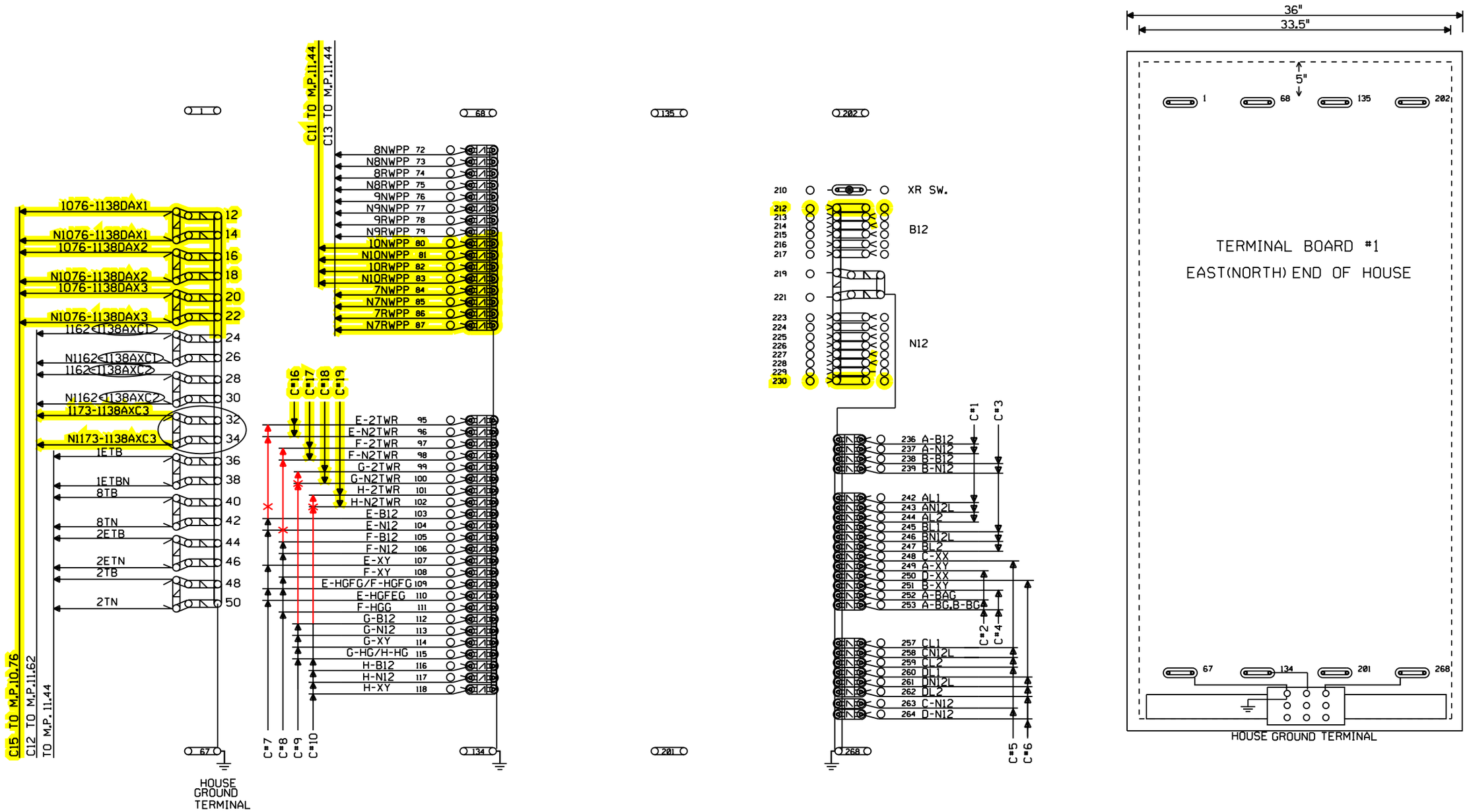


=IN

=OUT

=EXISTING, REVISE IF AC'D

= FUTURE

| | | | | | | | | | | |
|---|---|---|---|---|---|---|---|---|---|---|
| | | | Designed: 4/29/16 INSTALL 3RD MAIN TK. 25TH TO VALE Rec#: WO#: 31881 IS: RLB / / /ATG/JVJ | Revised: 2/9/16 CHICAGO CREATE PROJECT - B2 PROVO JCT. Rec#: 21503 WO#: 89793 IS: TAH/ATG/ RC /MWK /MDF | Revised: 2/8/16 CHICAGO CREATE PROJECT - B2 25TH AVENUE Rec#: 21503 WO#: 89794 IS: TAH/ATG/ RC /JJL /MDF | MODIFICATION LEVEL<br>O.A. LAST LEVEL CHECKED DO<br>LAST LEVEL MOD THIS TYPICAL DO<br>LAST LEVEL BY DESIGNER DS<br>CHANGED FROM TYPICAL? Y<br>REV 09/22/09 MICROEEOS.15 | CIRCUIT MODIFICATIONS ARE NOT TO BE MADE WITHOUT AUTHORITY FROM THE OFFICE OF SIGNAL DESIGN | Date: 02/11/10<br>Des: RC<br>Chk: JJL<br>AFE: 89794 | UNION PACIFIC RAILROAD<br>MELROSE PARK, ILLINOIS<br>19TH AVENUE<br>GENEVA SUBDIVISION<br>Office of AVP Engineering - Signal Omaha, Nebraska | Sh.: 8<br>DOT 174 009S<br>MP: 11.38<br>ID: GEN1138.8X |

GEN1138.8X 8/11/2016 8:29:05 AM

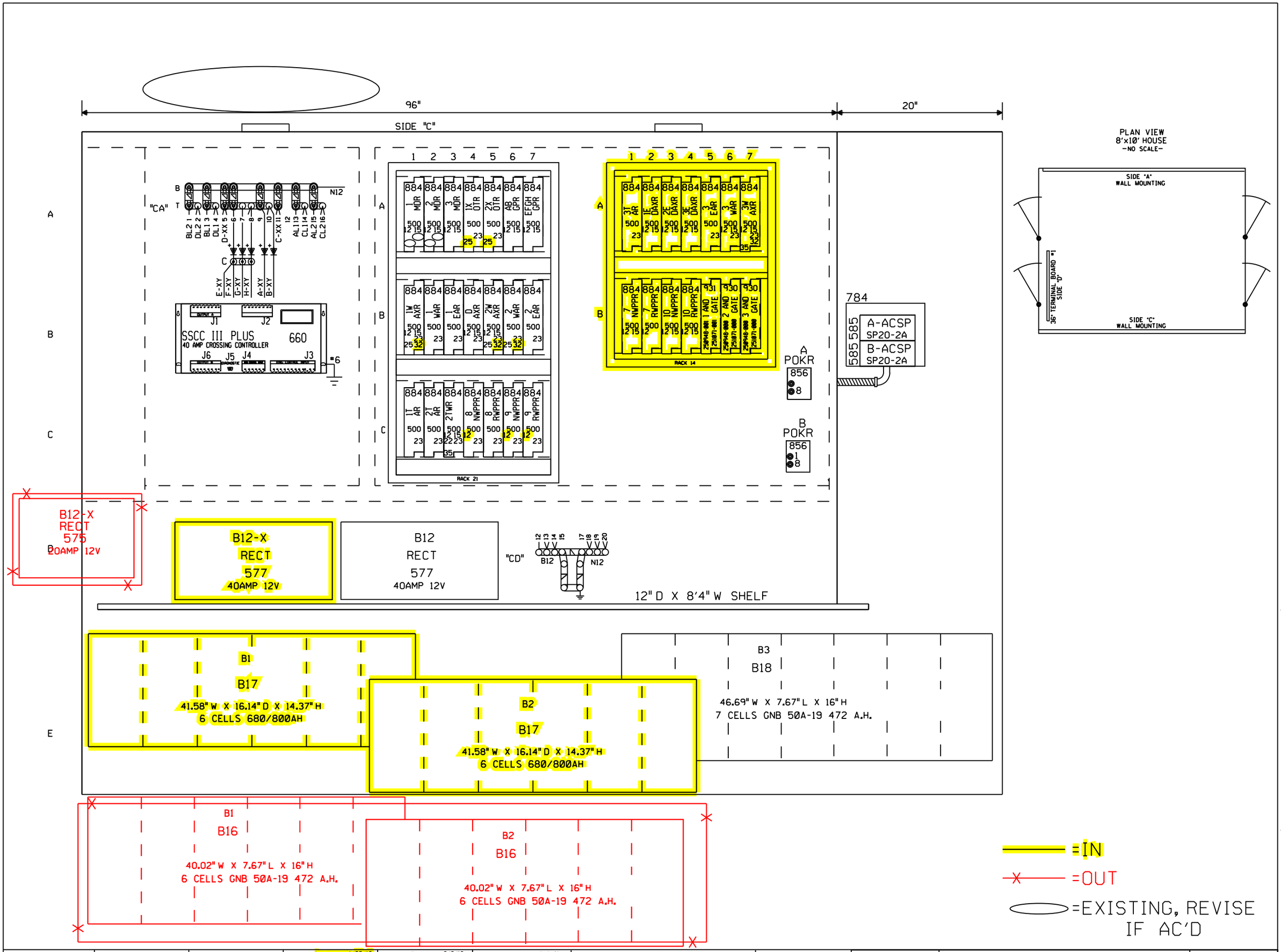


| | | | | | | | | | |
|---|---|---|---|---|---|---|---|---|---|
| Designed: 4/29/16<br>INSTALL 3RD MAIN TK.<br>25TH TO VALE<br>Rec#: IS: WO#: 31881 RLB / /ATG/JVJ | Revised: 2/9/16<br>CHICAGO CREATE<br>PROJECT - B2<br>PROVO JCT.<br>Rec#: 21503 WO#: 89793 /MWK<br>IS: TAH/ATG/ RC /MDF | Revised: 2/8/16<br>CHICAGO CREATE<br>PROJECT - B2<br>25TH AVENUE<br>Rec#: 21503 WO#: 89794 /JJL<br>IS: TAH/ATG/ RC /MDF | MODIFICATION LEVEL<br>Q.A. LAST LEVEL CHECKED DQ<br>LAST LEVEL MOD THIS TYPICAL DQ<br>LAST LEVEL BY DESIGNER DS<br>CHANGED FROM TYPICAL? Y<br>REV 02/01/08 MICROEEOS.16 | CIRCUIT MODIFICATIONS ARE NOT TO BE MADE WITHOUT AUTHORITY FROM THE OFFICE OF SIGNAL DESIGN | Date: 02/11/10<br>Des: RC<br>Chk: JJL<br>AFE: 89794 | UNION PACIFIC RAILROAD<br>MELROSE PARK, ILLINOIS<br>19TH AVENUE<br>GENEVA SUBDIVISION<br>Office of AVP Engineering - Signal Omaha, Nebraska | Sh.: 9<br>DOT 174 009S<br>MP: 11.38<br>ID: GEN1138.9X |

GEN1138.9X 8/11/2016 8:29:07 AM

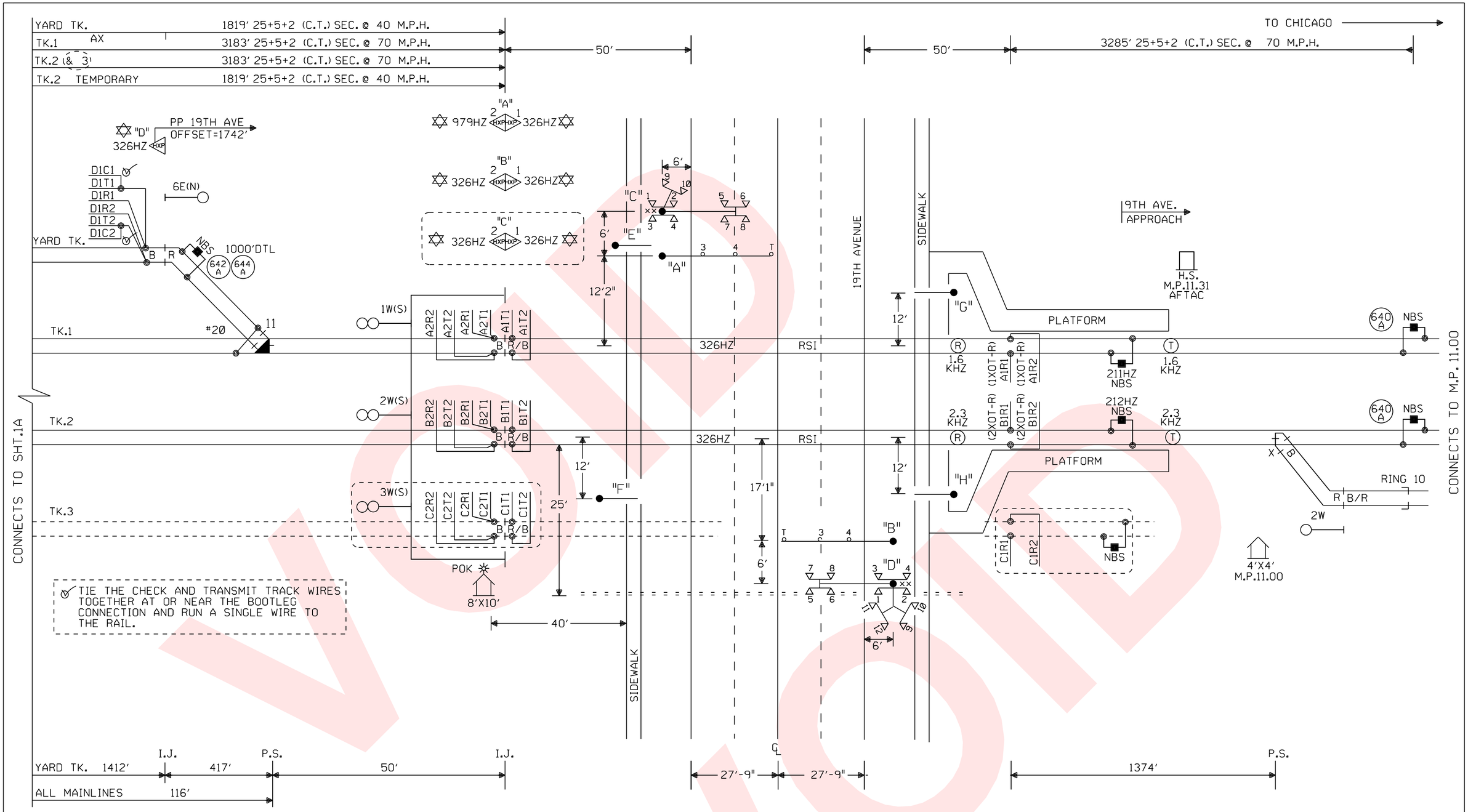


ADJUST AFTAC RECEIVER TO DE-ENERGIZE WHEN A SHUNT IS PLACED ANYWHERE WITHIN PLATFORM.

NOTES:

⊗ = TWISTED WIRES INSULATED 1 TWIST PER FT. ALL TRACK WIRES 2C. #6

TRANSMITTER AND RECEIVER LEADS TO BE SEPARATED BY AT LEAST 12" IN TRENCH, LENGTHS SHOULD NOT EXCEED MANUFACTURES RECOMMENDATION.

TOP OF FOUNDATION TO BE AT SAME ELEVATION AS THE SURFACE OF THE TRAVELED WAY & NO MORE THAN 4" ABOVE THE SURFACE OF THE GROUND.

ALL BUNGALOW WIRING TO BE #16 AWG FLEX UNLESS OTHERWISE SPECIFIED EXCEPT ALL GROUND WIRE TO BE #6 AWG FLEX OR LARGER.

ALL WIRING IN GATE MECHANISM TO BE #10 "AWG FLEX".

REFER TO UP STANDARD DWG FOR BUNGALOW GROUNDING.

ALL LIGHTS TO BE 12" ROUNDELS.

- - - - - - - = FUTURE

= = = = = = 4" X ' CONDUIT

LIGHTS: LED LIGHTS

GATE "A": 28' GATE "E": 10'
GATE "B": 28' GATE "F": 10'
CANT "C": ' GATE "G": 10'
CANT "D": ' GATE "H": 9'

xx = BELL

✡ = HXP TO OPERATE IN SEMI-BI DIRECTIONAL MODE.

△ = ENSURE TRACK POLARITY IS TRANSPOSED ACROSS ALL INSULATED JOINTS.

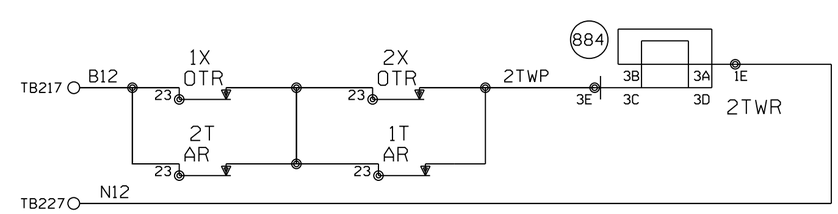


W(S) ← → E(N)

| | | | | | | | | | | | |
|---|---|---|---|---|---|---|---|---|---|---|---|
| | | | | Revised: 2/9/16<br>CHICAGO CREATE PROJECT - B2 PROVO JCT.<br>Rec#: 21503 WO#: 89793 IS: /MWK TAH/ATG/ RC /MDF | Revised: 2/8/16<br>CHICAGO CREATE PROJECT - B2 25TH AVENUE<br>Rec#: 21503 WO#: 89794 IS: /JJL TAH/ATG/ RC /MDF | MODIFICATION LEVEL<br>Q.A. LAST LEVEL CHECKED DQ<br>LAST LEVEL MOD THIS TYPICAL DQ<br>LAST LEVEL BY DESIGNER DS<br>CHANGED FROM TYPICAL? Y<br>REV 02.01.08 4K 2TUCGTYP.1 | CIRCUIT MODIFICATIONS ARE NOT TO BE MADE WITHOUT AUTHORITY FROM THE OFFICE OF SIGNAL DESIGN | Date: 02/11/10<br>Des: RC<br>Chk: JJL<br>AFE: 89794 | UNION PACIFIC RAILROAD<br>MELROSE PARK, ILLINOIS<br>19TH AVENUE<br>GENEVA SUBDIVISION<br>Office of AVP Engineering - Signal Omaha, Nebraska | Sh.: 1<br>DOT 174 009S<br>MP: 11.38<br>ID: GEN1138.1X |

VOID

Void_GEN1138.1X 8/11/2016 8:29:09 AM

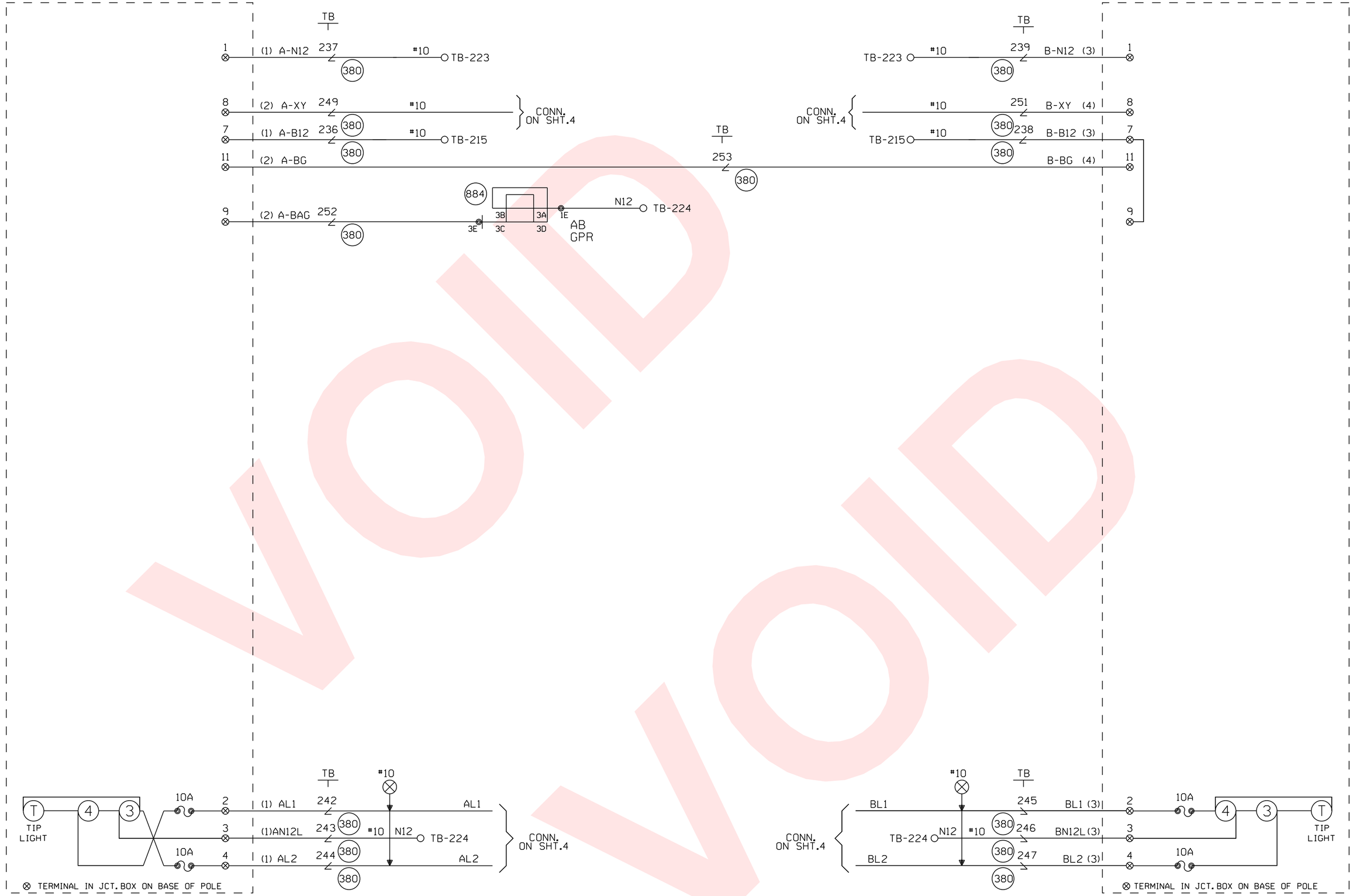


CABLE TABULATION

CABLE NO. 1 5C. NO.6 U.G.B.T.
CABLE NO. 2 7C. NO.14 U.G.B.T.
CABLE NO. 3 5C. NO.6 U.G.B.T.
CABLE NO. 4 7C. NO.14 U.G.B.T.

| | | | |
|---|---|---|---|
| Revised: 2/9/16 | CHICAGO CREATE PROJECT - B2 PROVO JCT. | Rec#: 21503 WO#: 89793 IS: TAH/ATG/ RC /MDF /MWK | |
| Revised: 2/8/16 | CHICAGO CREATE PROJECT - B2 25TH AVENUE | Rec#: 21503 WO#: 89794 IS: TAH/ATG/ RC /MDF /JJL | |

| MODIFICATION LEVEL | |
|---|---|
| O. A. LAST LEVEL CHECKED | DQ |
| LAST LEVEL MOD THIS TYPICAL | DQ |
| LAST LEVEL BY DESIGNER | DS |
| CHANGED FROM TYPICAL? | Y |
| REV 02.01.08 4K GFCTYP.5 | |

CIRCUIT MODIFICATIONS ARE NOT TO BE MADE WITHOUT AUTHORITY FROM THE OFFICE OF SIGNAL DESIGN

Date: 02/11/10
Des: RC
Chk: JJL
AFE: 89794

# UNION PACIFIC RAILROAD

MELROSE PARK, ILLINOIS
19TH AVENUE
GENEVA SUBDIVISION

Office of AVP Engineering - Signal Omaha, Nebraska

Sh.: 5
DOT 174 009S
MP: 11.38
ID: GEN1138.5X

VOID VOID

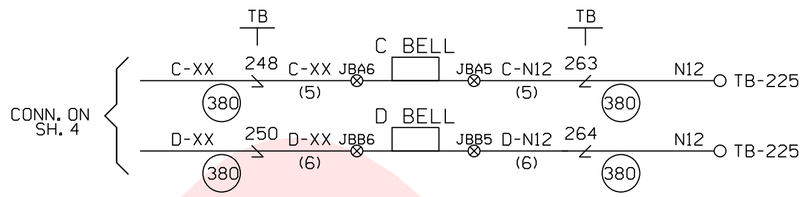


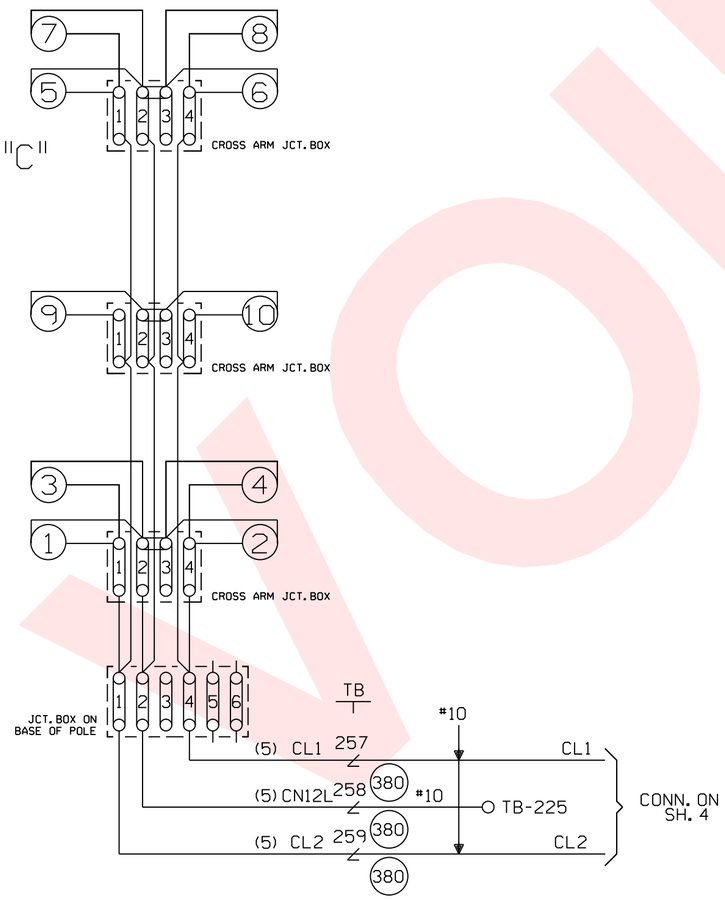


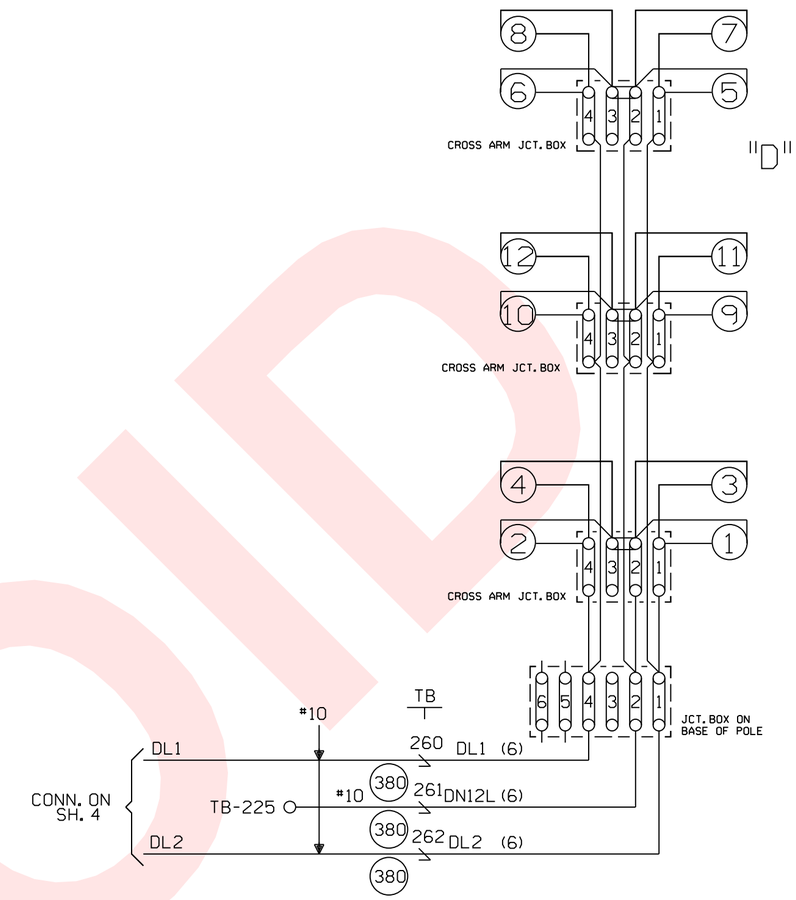


CABLE TABULATION

CABLE NO. 5 5C. NO. 6 U.G.B.T.
CABLE NO. 6 5C. NO. 6 U.G.B.T.

| | | | | | | | | | | | |
|---|---|---|---|---|---|---|---|---|---|---|---|
| | | | | Revised: 2/9/16<br>CHICAGO CREATE<br>PROJECT - B2<br>PROVO JCT.<br>Rec#: 21503 WO#: 89793<br>IS: /MWK<br>TAH/ATG/ RC /MDF | Revised: 2/8/16<br>CHICAGO CREATE<br>PROJECT - B2<br>25TH AVENUE<br>Rec#: 21503 WO#: 89794<br>IS: /JJL<br>TAH/ATG/ RC /MDF | MODIFICATION LEVEL<br>Q.A. LAST LEVEL CHECKED DQ<br>LAST LEVEL MOD THIS TYPICAL DQ<br>LAST LEVEL BY DESIGNER DS<br>CHANGED FROM TYPICAL? Y<br>Rev 02.01.08 4K CGTYP.6 | CIRCUIT MODIFICATIONS ARE NOT TO BE MADE WITHOUT AUTHORITY FROM THE OFFICE OF SIGNAL DESIGN | Date: 02/11/10<br>Des: RC<br>Chk: JJL<br>AFE: 89794 | UNION PACIFIC RAILROAD<br>MELROSE PARK, ILLINOIS<br>19TH AVENUE<br>GENEVA SUBDIVISION<br>Office of AVP Engineering - Signal Omaha, Nebraska | Sh.: 5A<br>DOT 174 009S<br>MP: 11.38<br>ID: GEN1138.5AX |

VOID VOID

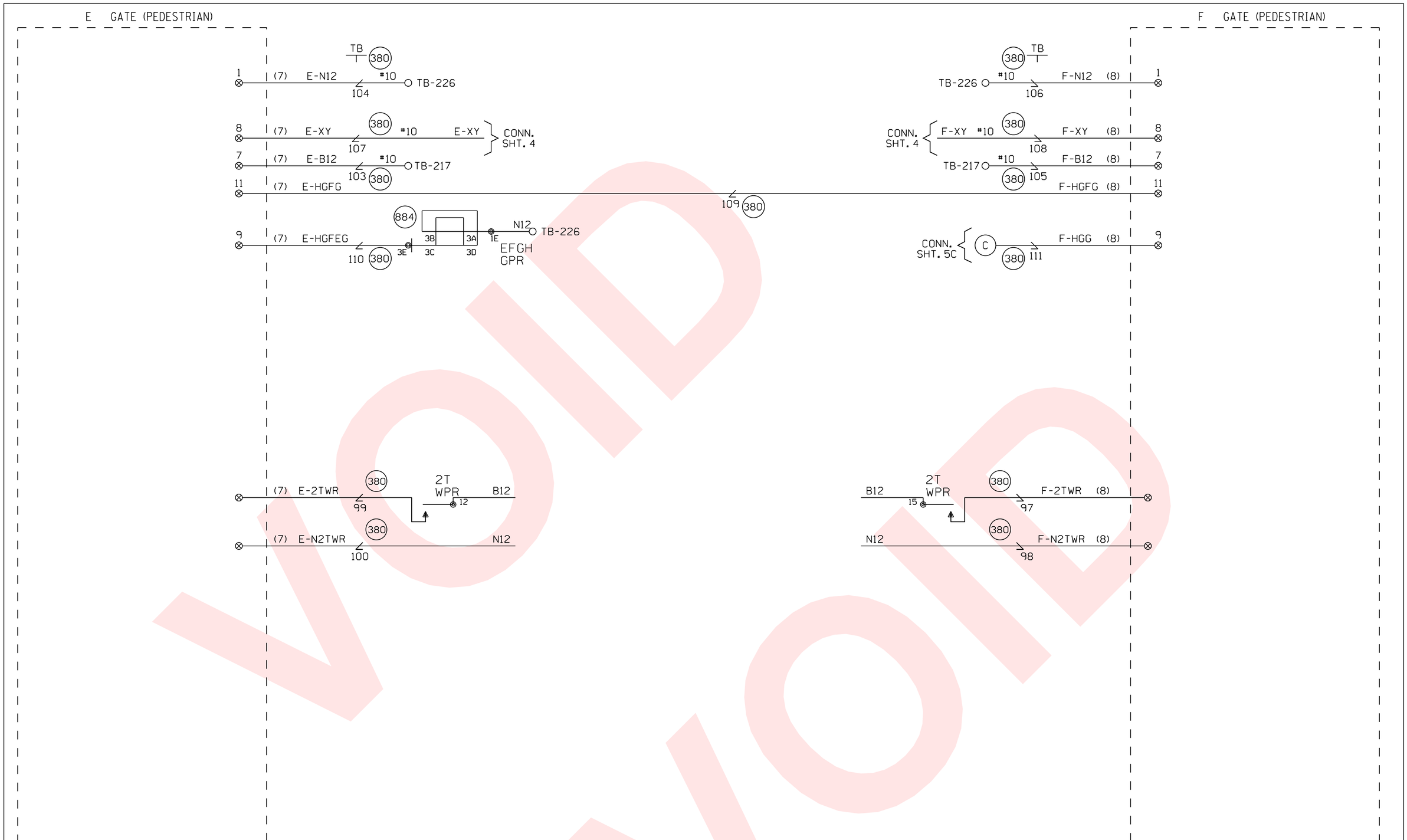


CABLE TABULATION

CABLE NO. 7 5C. NO.6 U.G.B.T.
CABLE NO. 8 5C. NO.6 U.G.B.T.
CABLE NO. 9 5C. NO.6 U.G.B.T.
CABLE NO.10 5C. NO.6 U.G.B.T.

CABLE NO.12 7C. NO.14 U.G.B.T. TO M.P.11.62
CABLE NO.13 12C. NO.14 U.G.B.T. TO M.P.11.44
CABLE NO.14 U.G.B.T. TO 2ND TRAIN WARNING SYSTEM.

| | | | | | | | | | | | |
|---|---|---|---|---|---|---|---|---|---|---|---|
| | | | | Revised: 2/9/16<br>CHICAGO CREATE PROJECT - B2 PROVO JCT.<br>Rec#: 21503 WO#: 89793<br>IS: /MWK<br>TAH/ATG/ RC /MDF | Revised: 2/8/16<br>CHICAGO CREATE PROJECT - B2 25TH AVENUE<br>Rec#: 21503 WO#: 89794<br>IS: /JJL<br>TAH/ATG/ RC /MDF | MODIFICATION LEVEL | | CIRCUIT MODIFICATIONS ARE NOT TO BE MADE WITHOUT AUTHORITY FROM THE OFFICE OF SIGNAL DESIGN | Date: 02/11/10<br>Des: RC<br>Chk: JJL<br>AFE: 89794 | UNION PACIFIC RAILROAD<br>MELROSE PARK, ILLINOIS<br>19TH AVENUE<br>GENEVA SUBDIVISION<br>Office of AVP Engineering - Signal Omaha, Nebraska | Sh.: 5B<br>DOT 174 009S<br>MP: 11.38<br>ID: GEN1138.5BX |
| | | | | | | Q.A. LAST LEVEL CHECKED | DQ | | | | |
| | | | | | | LAST LEVEL MOD THIS TYPICAL | DQ | | | | |
| | | | | | | LAST LEVEL BY DESIGNER | DS | | | | |
| | | | | | | CHANGED FROM TYPICAL?<br>REV 02.01.08 4K 4GFTYP.6 | Y | | | | |

VOID

Void_GEN1138.5BX 8/11/2016 8:29:13 AM

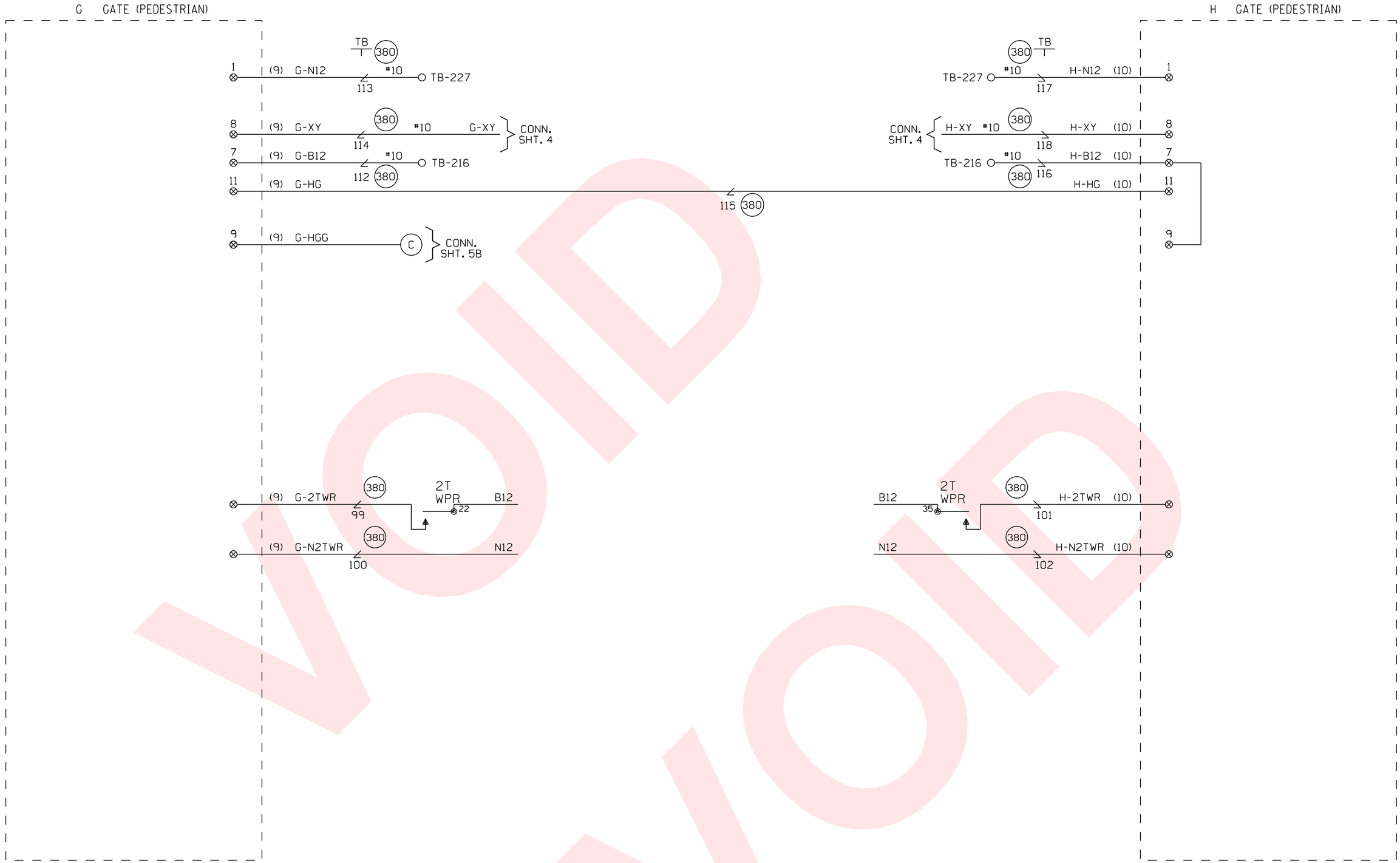


VOID

| | | | | | | | | | | |
|---|---|---|---|---|---|---|---|---|---|---|
| | | | | Revised: 2/9/16<br>CHICAGO CREATE PROJECT - B2 PROVO JCT.<br>Rec#: 21503 WO#: 89793<br>IS: /MWK<br>TAH/ATG/ RC /MDF | Revised: 2/8/16<br>CHICAGO CREATE PROJECT - B2 25TH AVENUE<br>Rec#: 21503 WO#: 89794<br>IS: /JJL<br>TAH/ATG/ RC /MDF | MODIFICATION LEVEL<br>Q.A. LAST LEVEL CHECKED DQ<br>LAST LEVEL MOD THIS TYPICAL DQ<br>LAST LEVEL BY DESIGNER DS<br>CHANGED FROM TYPICAL? Y<br>REV 02.01.08 4K 4GFTYP.6 | CIRCUIT MODIFICATIONS ARE NOT TO BE MADE WITHOUT AUTHORITY FROM THE OFFICE OF SIGNAL DESIGN | Date: 02/11/10<br>Des: RC<br>Chk: JJL<br>AFE: 89794 | UNION PACIFIC RAILROAD<br>MELROSE PARK, ILLINOIS<br>19TH AVENUE<br>GENEVA SUBDIVISION<br>Office of AVP Engineering - Signal Omaha, Nebraska | Sh.: 5C<br>DOT 174 009S<br>MP: 11.38<br>ID: GEN1138.5CX |

Void_GEN1138.5CX 8/11/2016 8:29:14 AM

WCH 3597

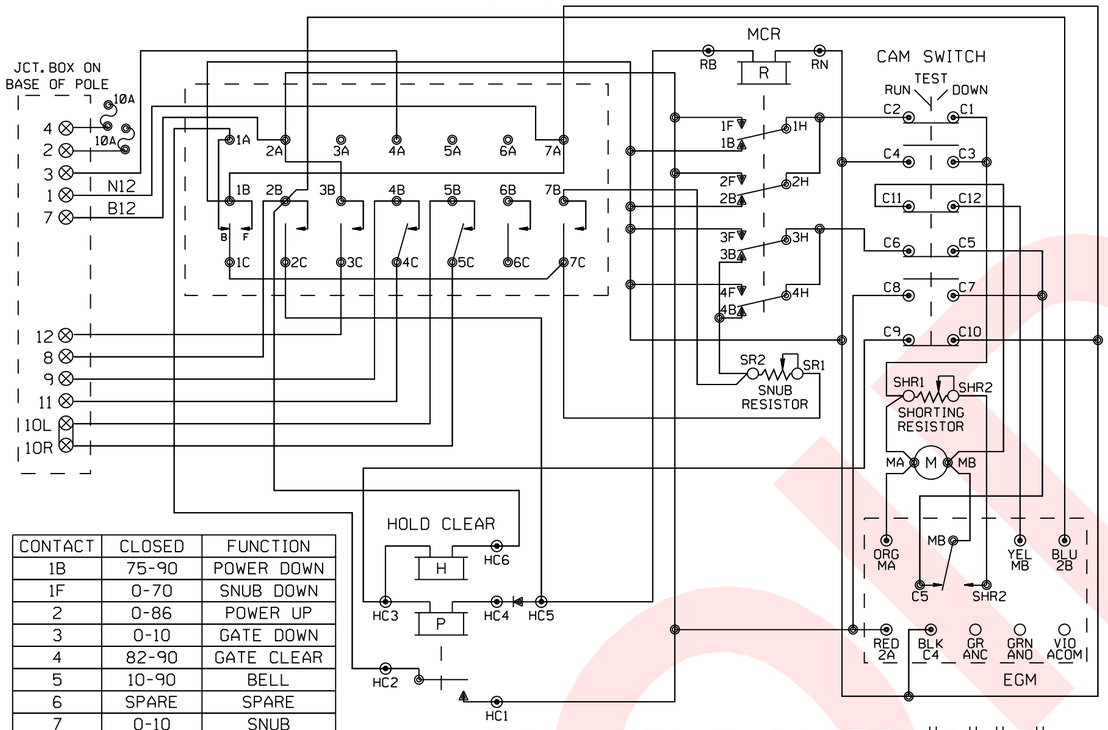


| CONTACT | CLOSED | FUNCTION |
|---|---|---|
| 1B | 75-90 | POWER DOWN |
| 1F | 0-70 | SNUB DOWN |
| 2 | 0-86 | POWER UP |
| 3 | 0-10 | GATE DOWN |
| 4 | 82-90 | GATE CLEAR |
| 5 | 10-90 | BELL |
| 6 | SPARE | SPARE |
| 7 | 0-10 | SNUB |

FOR WIRING GATES "B", "E"

SAFETRAN PRODUCTS MODEL "S" MECHANISM

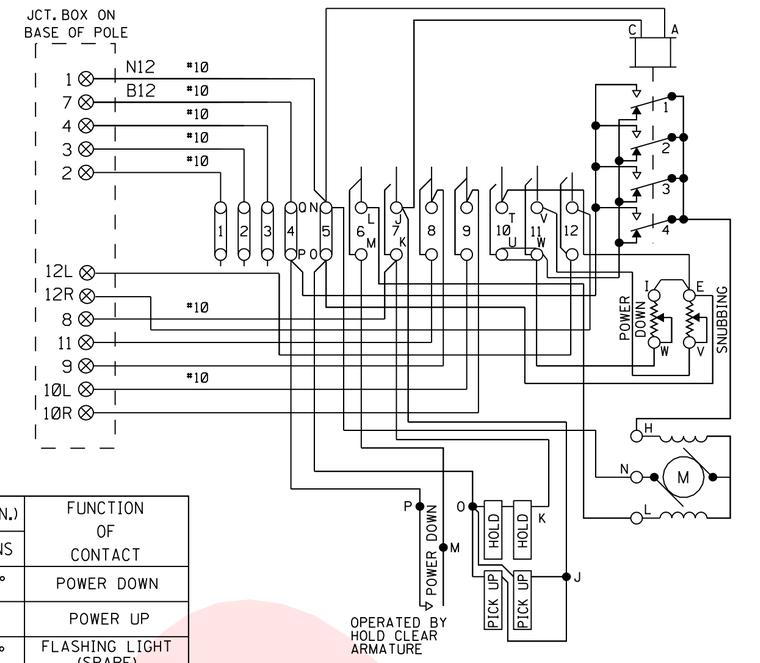


SHOW TYPE MECH. INSTALLED

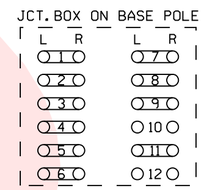


| CONT. SPACE NO. | CLEARING (UP) | | RETURNING (DN.) | | FUNCTION OF CONTACT |
|---|---|---|---|---|---|
| | CLOSES | OPENS | CLOSES | OPENS | |
| 6 | 45° | — | — | 45° | POWER DOWN |
| 7 | — | 89° | 89° | — | POWER UP |
| 8 | 83° | — | — | 83° | FLASHING LIGHT (SPARE) |
| 9 | 5° | — | — | 5° | BELL (SPARE) |
| 10 | — | 5° | 5° | — | HORIZONTAL SNUB |
| 11 | — | 45° | 45° | — | DOWN SNUB |
| 12 | — | 5° | 5° | — | GATE DOWN |

MECHANISM SHOWN IN CLEAR POSITION.

FOR WIRING GATE "G"

WCH 3593-E

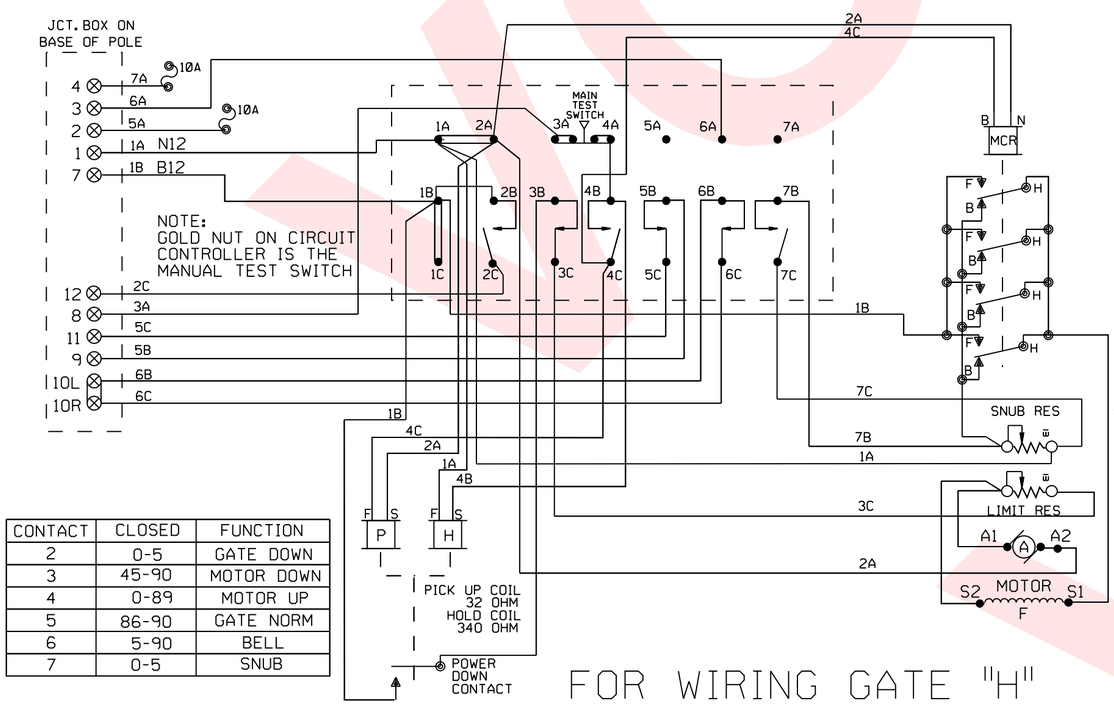


| CONTACT | CLOSED | FUNCTION |
|---|---|---|
| 2 | 0-5 | GATE DOWN |
| 3 | 45-90 | MOTOR DOWN |
| 4 | 0-89 | MOTOR UP |
| 5 | 86-90 | GATE NORM |
| 6 | 5-90 | BELL |
| 7 | 0-5 | SNUB |

FOR WIRING GATE "H"

SAFETRAN PRODUCTS MODEL "S-20" MECHANISM

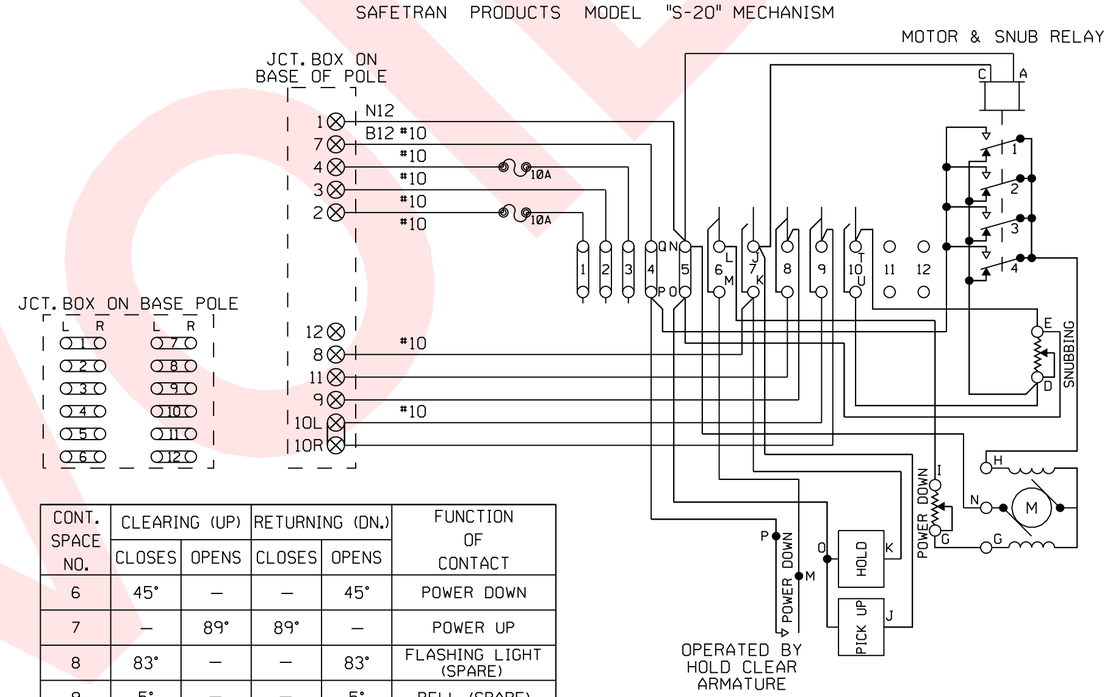


JCT. BOX ON BASE POLE

| CONT. SPACE NO. | CLEARING (UP) | | RETURNING (DN.) | | FUNCTION OF CONTACT |
|---|---|---|---|---|---|
| | CLOSES | OPENS | CLOSES | OPENS | |
| 6 | 45° | — | — | 45° | POWER DOWN |
| 7 | — | 89° | 89° | — | POWER UP |
| 8 | 83° | — | — | 83° | FLASHING LIGHT (SPARE) |
| 9 | 5° | — | — | 5° | BELL (SPARE) |
| 10 | — | 5° | 5° | — | HORIZONTAL SNUB |

MECHANISM SHOWN IN CLEAR POSITION.

FOR WIRING GATE "F"

SHOW TYPE MECH. INSTALLED

ALL MECHANISMS SHOWN IN THE CLEAR POSITION

JCT. BOX ON BASE POLE

| Revised: 2/9/16 | Revised: 2/8/16 |
|---|---|
| CHICAGO CREATE PROJECT - B2 PROVO JCT. | CHICAGO CREATE PROJECT - B2 25TH AVENUE |
| Rec#: 21503 WO#: 89793 IS: TAH/ATG/ RC /MWK /MDF | Rec#: 21503 WO#: 89794 IS: TAH/ATG/ RC /JJL /MDF |

| MODIFICATION LEVEL | |
|---|---|
| O.A. LAST LEVEL CHECKED | DQ |
| LAST LEVEL MOD THIS TYPICAL | DQ |
| LAST LEVEL BY DESIGNER | DS |
| CHANGED FROM TYPICAL? | N |
| REV 02.01.08 4K GWIRING.DGN | |

CIRCUIT MODIFICATIONS ARE NOT TO BE MADE WITHOUT AUTHORITY FROM THE OFFICE OF SIGNAL DESIGN

Date: 02/11/10
Des: RC
Chk: JJL
AFE: 89794

**UNION PACIFIC RAILROAD**
MELROSE PARK, ILLINOIS
19TH AVENUE
GENEVA SUBDIVISION
Office of AVP Engineering - Signal Omaha, Nebraska

Sh.: 6
DOT 174 009S
MP: 11.38
ID: GEN1138.6X

Void_GEN1138.6X 8/11/2016 8:29:20 AM

# SAFETRAN PRODUCTS MODEL "S-40" MECHANISM

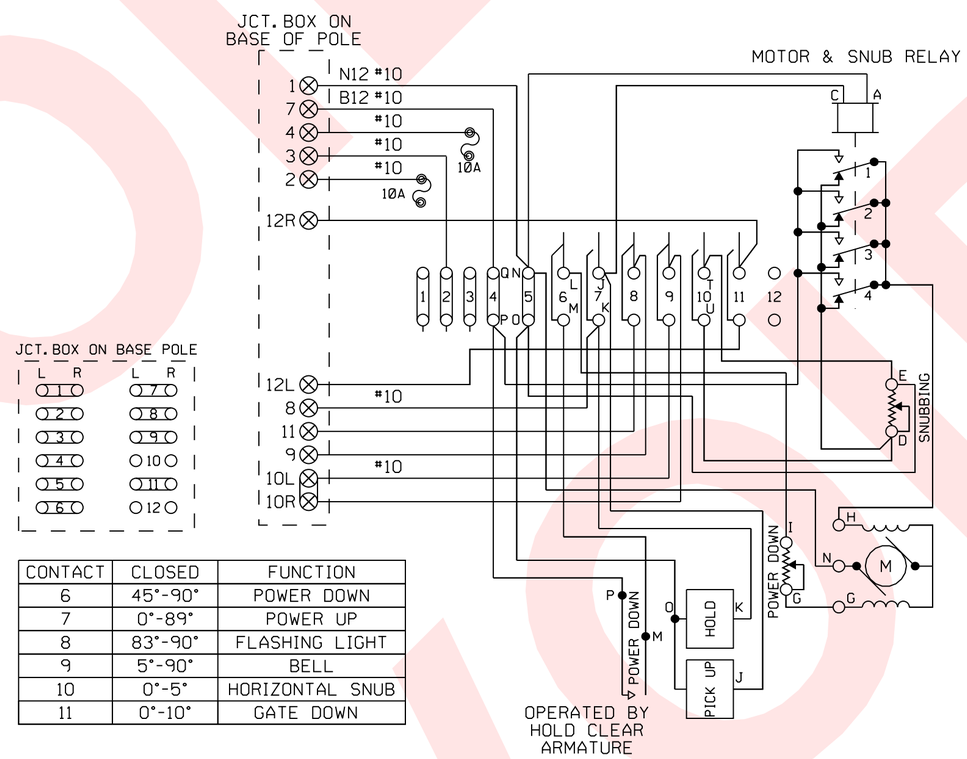





| CONTACT | CLOSED | FUNCTION |
|---|---|---|
| 6 | 45°-90° | POWER DOWN |
| 7 | 0°-89° | POWER UP |
| 8 | 83°-90° | FLASHING LIGHT |
| 9 | 5°-90° | BELL |
| 10 | 0°-5° | HORIZONTAL SNUB |
| 11 | 0°-10° | GATE DOWN |

MECHANISM SHOWN IN CLEAR POSITION.

## FOR WIRING GATE "A"

Revised: 2/9/16
REVISED PER AC RECORD #21503
Rec#: 21503 WO#:
IS: TAH/ATG/ /

CIRCUIT MODIFICATIONS ARE NOT TO BE MADE WITHOUT AUTHORITY FROM THE OFFICE OF SIGNAL DESIGN

Date: 2/9/16
Des: ATG
Chk:
AFE:

**UNION PACIFIC RAILROAD**
MELROSE PARK, ILLINOIS
19TH AVENUE
GENEVA SUBDIVISION
Office of AVP Engineering - Signal Omaha, Nebraska

Sh.: 6A
DOT 174 009S
MP: 11.38
ID: GEN1138.6AX

VOID