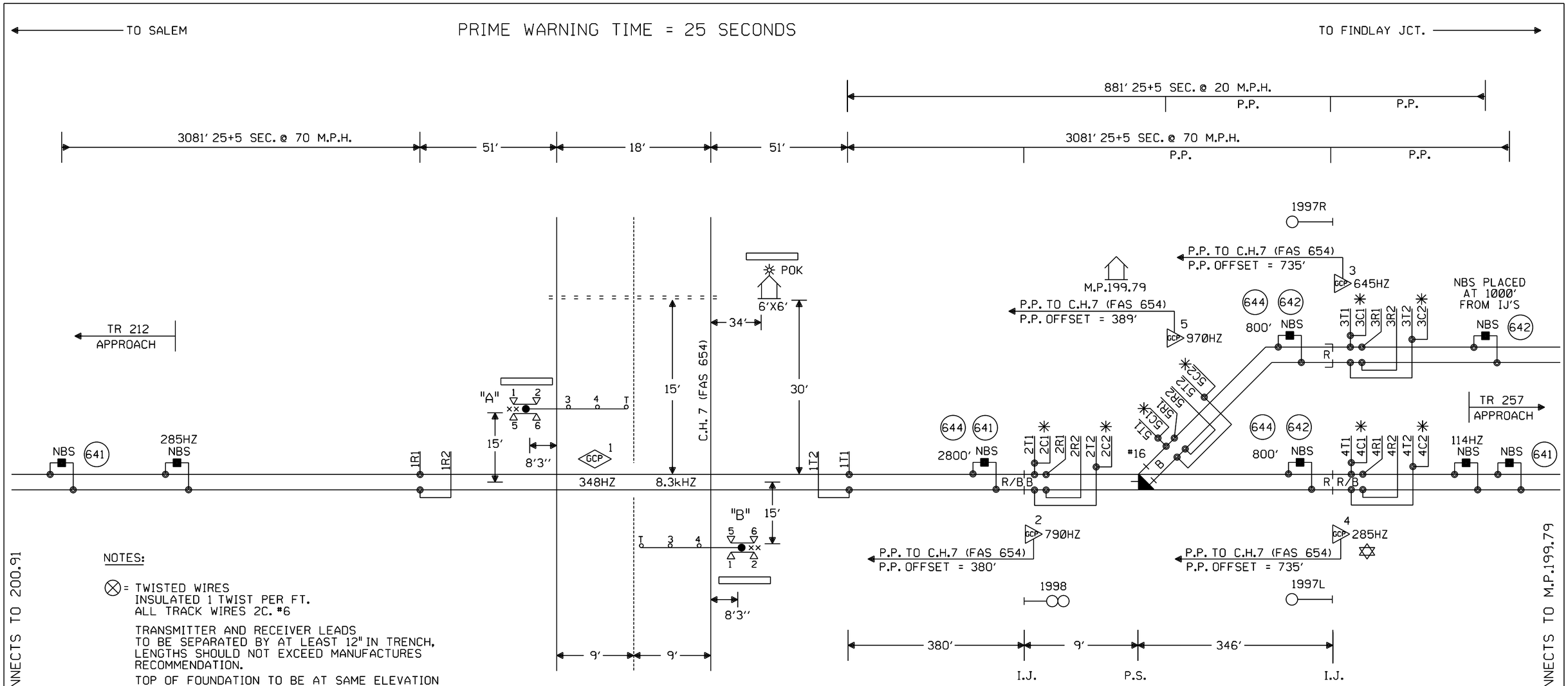

NOTES:

⊗ = TWISTED WIRES
INSULATED 1 TWIST PER FT.
ALL TRACK WIRES 2C. #6

TRANSMITTER AND RECEIVER LEADS TO BE SEPARATED BY AT LEAST 12" IN TRENCH, LENGTHS SHOULD NOT EXCEED MANUFACTURES RECOMMENDATION.

TOP OF FOUNDATION TO BE AT SAME ELEVATION AS THE SURFACE OF THE TRAVELED WAY & NO MORE THAN 4" ABOVE THE SURFACE OF THE GROUND.

ALL BUNGALOW WIRING TO BE #16 AWG FLEX UNLESS OTHERWISE SPECIFIED EXCEPT ALL GROUND WIRE TO BE #6 AWG FLEX OR LARGER.

ALL WIRING IN GATE MECHANISM TO BE #10 "AWG FLEX".

REFER TO UP STANDARD DWG FOR BUNGALOW GROUNDING.

PORTABLE GENERATOR EXTENSION CORD FOR 240V TO 240V IS PROVIDED AS WELL AS A 120V TO 240V ADAPTER.

ALL LIGHTS TO BE 12" ROUNDELS.

= = = = = = 4" X 30' CONDUIT

LIGHTS: LED LIGHTS

GATE A: 17'
GATE B: 17'

xx = BELL

▭ = RETAINING WALL

✡ = GCP TO OPERATE IN SEMI-BI DIRECTIONAL MODE. USE TAB 627 COUPLER.

W(S) ◄——○——► E(N)

✳ TIE THE CHECK AND TRANSMIT TRACK WIRES TOGETHER AT OR NEAR THE BOOTLEG CONNECTION AND RUN A SINGLE WIRE TO THE RAIL.

Revised: 08-19-16 INSTALLED FLS/GATES WITH CWT AT M.P. 199.91 PID: WO#: 20915 IS: 08-18-16 / NBT Rec#: 26761 CJM/WIT /SMS /JTB	Revised: 04-28-16 INSTALLED FLASHERS, GATES, AND CWT AT M.P. 199.16 TR 257 PID: 87036 WO#: 25082 IS: 06-16-15 / CES Rec#: 23239 JWM/WIT /CAM /JTB	MODIFICATION LEVEL Q. A. LAST LEVEL CHECKED — DU LAST LEVEL MOD THIS TYPICAL — DU LAST LEVEL BY DESIGNER — DU CHANGED FROM TYPICAL? — Y REV 01.24.11 4K 1TKBG.1	CIRCUIT MODIFICATIONS ARE NOT TO BE MADE WITHOUT AUTHORITY FROM THE OFFICE OF SIGNAL DESIGN

Date: 07/03/13
Des: SMS
Chk: AJA
AFE: 20915

UNION PACIFIC RAILROAD
SHELBYVILLE, ILLINOIS
C.H. 7 (FAS 654)
SALEM SUBDIVISION
Office of Sr AVP Engineering - Signal/TCO Omaha, Nebraska

Sh.: 1
DOT 167864L
MP: 199.91
ID: 030119991.1X

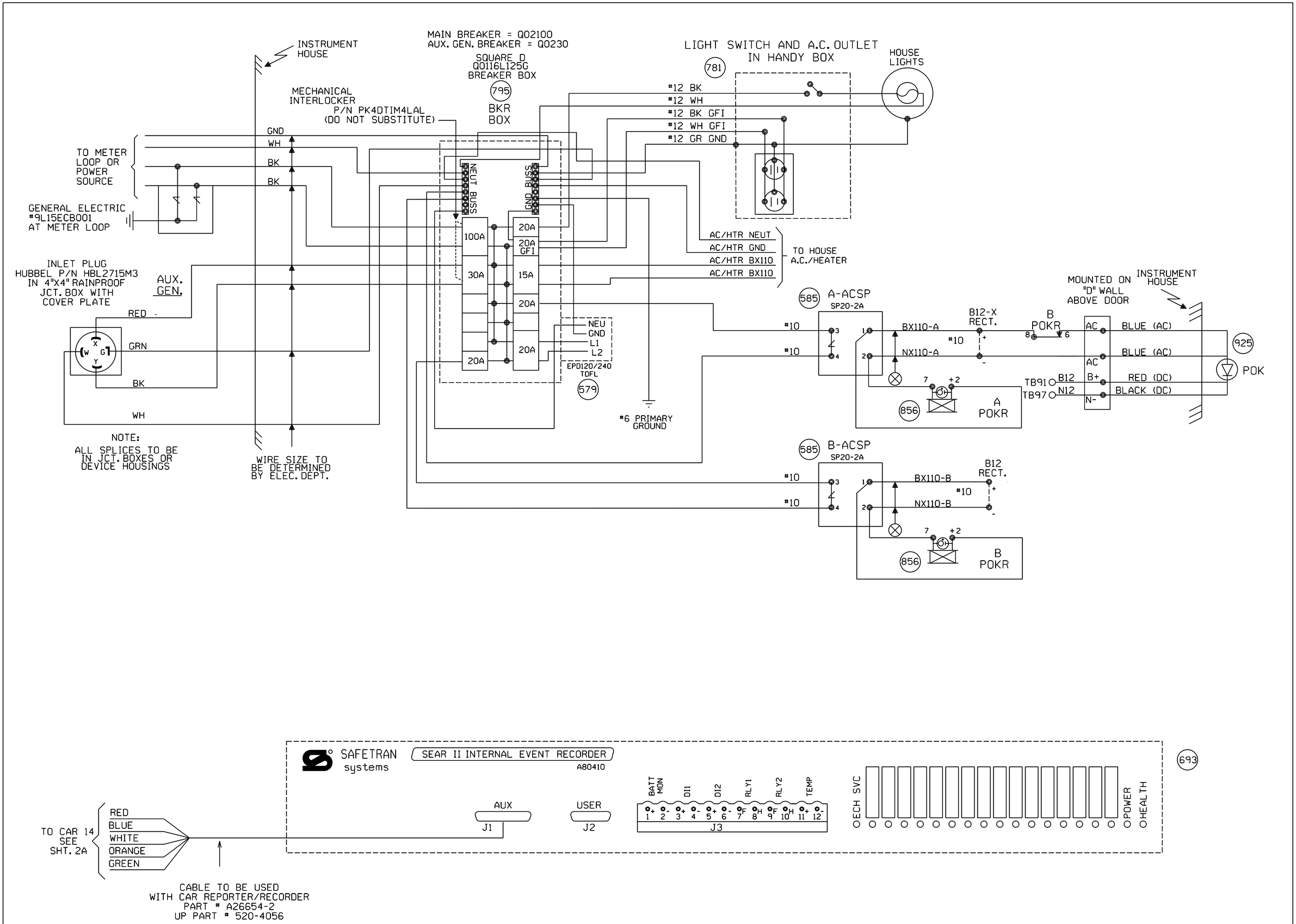

					Revised: 08-19-16 INSTALLED FLS/GATES WITH CWT AT M.P. 199.91 PID: WO#: 20915 IS: 08-18-16 / NBT Rec#: 26761 CJM/WIT/SMS/JTB	MODIFICATION LEVEL Q.A. LAST LEVEL CHECKED DU LAST LEVEL MOD THIS TYPICAL DU LAST LEVEL BY DESIGNER DU CHANGED FROM TYPICAL? Y REV 01.24.11 4K SEARAC.2	CIRCUIT MODIFICATIONS ARE NOT TO BE MADE WITHOUT AUTHORITY FROM THE OFFICE OF SIGNAL DESIGN	Date: 07/03/13 Des: SMS Chk: NBT AFE: 20915	UNION PACIFIC RAILROAD SHELBYVILLE, ILLINOIS C.H. 7 (FAS 654) SALEM SUBDIVISION Office of Sr AVP Engineering - Signal/TCO Omaha, Nebraska	Sh.: 2 DOT 167864L MP: 199.91 ID: 030119991.2X

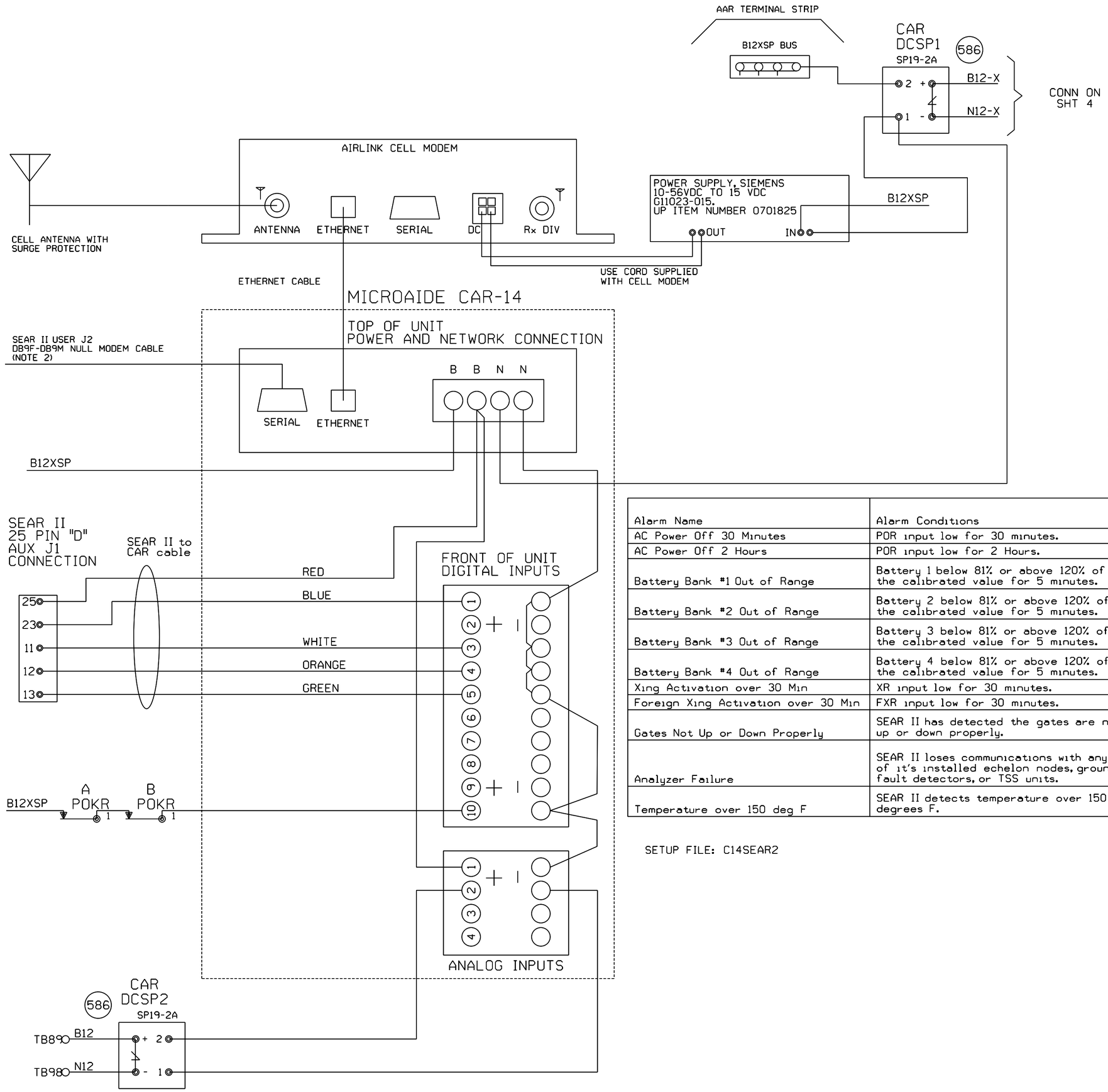

NOTE:
1) DO NOT JUMPER UNUSED INPUTS
2) THE CAR14 SERIAL PORT IS AVAILABLE TO ADD REMOTE CONNECTIVITY TO EXISTING LOGGING EQUIPMENT. USE NULL MODEM CABLE WITH SHIELDING DISCONNECTED AT ONE OR BOTH SIDES.

ANALOG INPUTS:
A1) B12X BATTERY BANK
A2) B12 BATTERY BANK
A3) BATTERY BANK 3
A4) BATTERY BANK 4

DIGITAL INPUTS
D1) XR (BLUE WIRE)
D2) FOREIGN XR
D3) ANALYZER FAILURE (WHITE WIRE)
D4) HIGH TEMPERATURE (ORANGE WIRE)
D5) GATES NOT UP OR DOWN PROPERLY (GREEN WIRE)
D10) POWER OFF INDICATION

Alarm Name	Alarm Conditions	Alarm Clearing Conditions	Cleared by Maintainer Mode?
AC Power Off 30 Minutes	POR input low for 30 minutes.	POR input high for 5 minutes.	No
AC Power Off 2 Hours	POR input low for 2 Hours.	POR input high for 5 minutes.	No
Battery Bank #1 Out of Range	Battery 1 below 81% or above 120% of the calibrated value for 5 minutes.	Battery 1 within acceptable range for 5 minutes.	No
Battery Bank #2 Out of Range	Battery 2 below 81% or above 120% of the calibrated value for 5 minutes.	Battery 2 within acceptable range for 5 minutes.	No
Battery Bank #3 Out of Range	Battery 3 below 81% or above 120% of the calibrated value for 5 minutes.	Battery 3 within acceptable range for 5 minutes.	No
Battery Bank #4 Out of Range	Battery 4 below 81% or above 120% of the calibrated value for 5 minutes.	Battery 4 within acceptable range for 5 minutes.	No
Xing Activation over 30 Min	XR input low for 30 minutes.	XR input high for 10 seconds.	Yes
Foreign Xing Activation over 30 Min	FXR input low for 30 minutes.	FXR input high for 10 seconds.	Yes
Gates Not Up or Down Properly	SEAR II has detected the gates are not up or down properly.	SEAR II has detected the gates are up or down properly.	No
Analyzer Failure	SEAR II loses communications with any of it's installed echelon nodes, ground fault detectors, or TSS units.	SEAR II has recovered after an analyzer failure alarm.	No
Temperature over 150 deg F	SEAR II detects temperature over 150 degrees F.	SEAR II sensor detects temperature is OK after a High-Temp alarm.	No

SETUP FILE: C14SEAR2

Revised: 08-19-16
INSTALLED FLS/GATES WITH CWT AT M.P. 199.91
PID: WO#: 20915
IS: 08-18-16 / NBT
Rec#: 26761 CJM/WIT/SMS/JTB

MODIFICATION LEVEL	
Q. A. LAST LEVEL CHECKED	DU
LAST LEVEL MOD THIS TYPICAL	DU
LAST LEVEL BY DESIGNER	DU
CHANGED FROM TYPICAL?	Y

REV 01.24.11 4K ACDCCAR14SII.3

CIRCUIT MODIFICATIONS ARE NOT TO BE MADE WITHOUT AUTHORITY FROM THE OFFICE OF SIGNAL DESIGN

Date: 07/03/13
Des: SMS
Chk: NBT
AFE: 20915

UNION PACIFIC RAILROAD
SHELBYVILLE, ILLINOIS
C.H.7 (FAS 654)
SALEM SUBDIVISION
Office of Sr AVP Engineering - Signal/TCO Omaha, Nebraska

Sh.: 2A
DOT 167864L
MP: 199.91
ID: 030119991.2AX

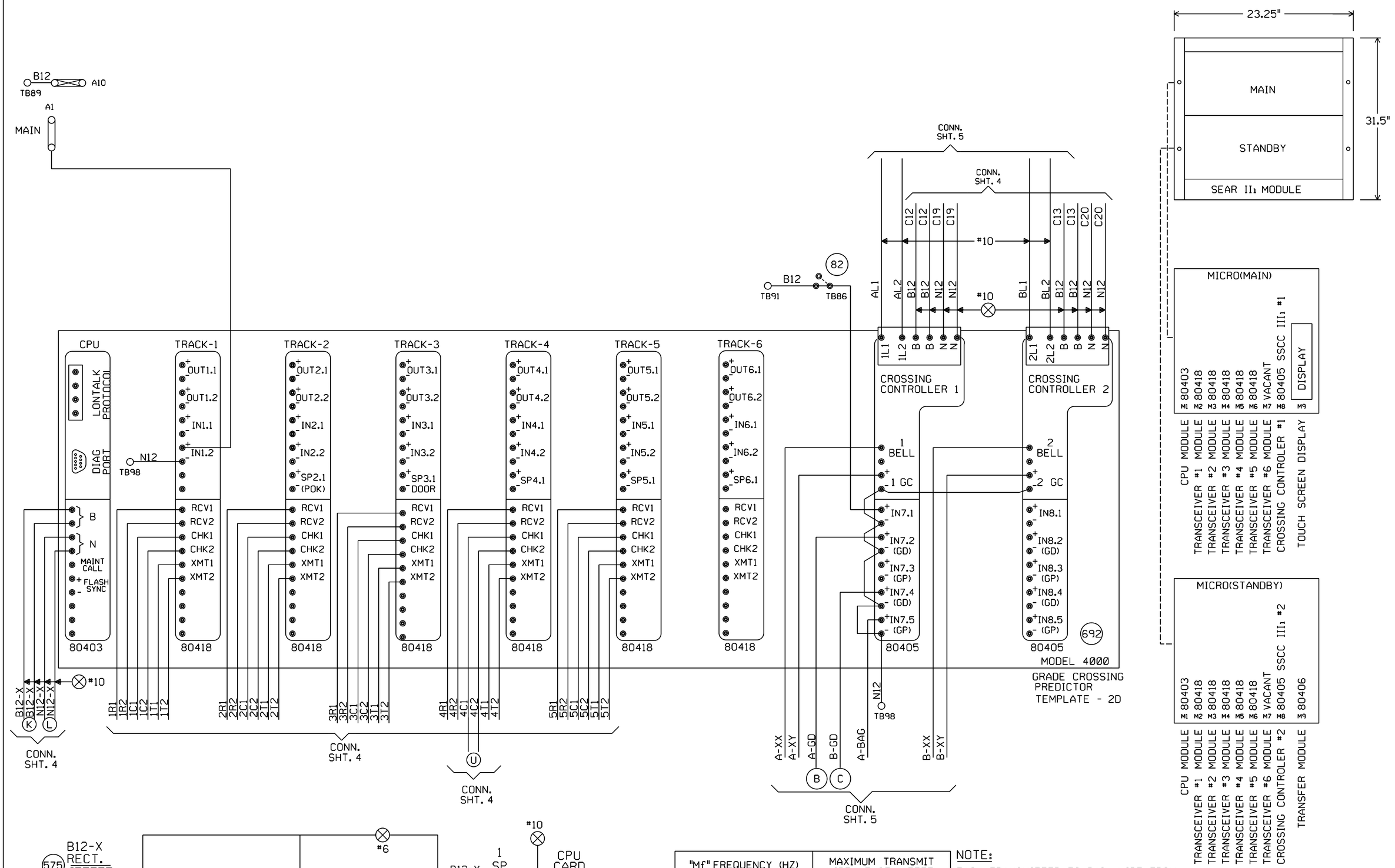

"Mf" FREQUENCY (HZ)	MAXIMUM TRANSMIT WIRE LENGTH (FEET)
86	100
114	125
156	150
211	200
285-970	250

NOTE:
EACH TRANSMITTER TO RAIL WIRE FROM XMT1 AND XMT2 MUST NOT EXCEED THE MAXIMUM LENGTH SPECIFIED IN THE TABLE SHOWN. THE RECEIVER WIRE LENGTH IS NOT CRITICAL. DOES NOT APPLY TO 6 TRACK WIRE APPLICATION.

Revised: 08-19-16
INSTALLED FLS/GATES WITH CWT AT M.P. 199.91
PID: WO#: 20915
IS: 08-18-16 NBT
Rec#: 26761 CJM/WIT /SMS /JTB

MODIFICATION LEVEL	
Q. A. LAST LEVEL CHECKED	DU
LAST LEVEL MOD THIS TYPICAL	DU
LAST LEVEL BY DESIGNER	DU
CHANGED FROM TYPICAL?	Y

REV 01.24.11 4K 4TKB4GF.3

CIRCUIT MODIFICATIONS ARE NOT TO BE MADE WITHOUT AUTHORITY FROM THE OFFICE OF SIGNAL DESIGN

Date: 07/03/13
Des: SMS
Chk: NBT
AFE: 20915

UNION PACIFIC RAILROAD
SHELBYVILLE, ILLINOIS
C.H. 7 (FAS 654)
SALEM SUBDIVISION
Office of Sr AVP Engineering - Signal/TCO Omaha, Nebraska

Sh.: 3
DOT 167864L
MP: 199.91
ID: 030119991.3X

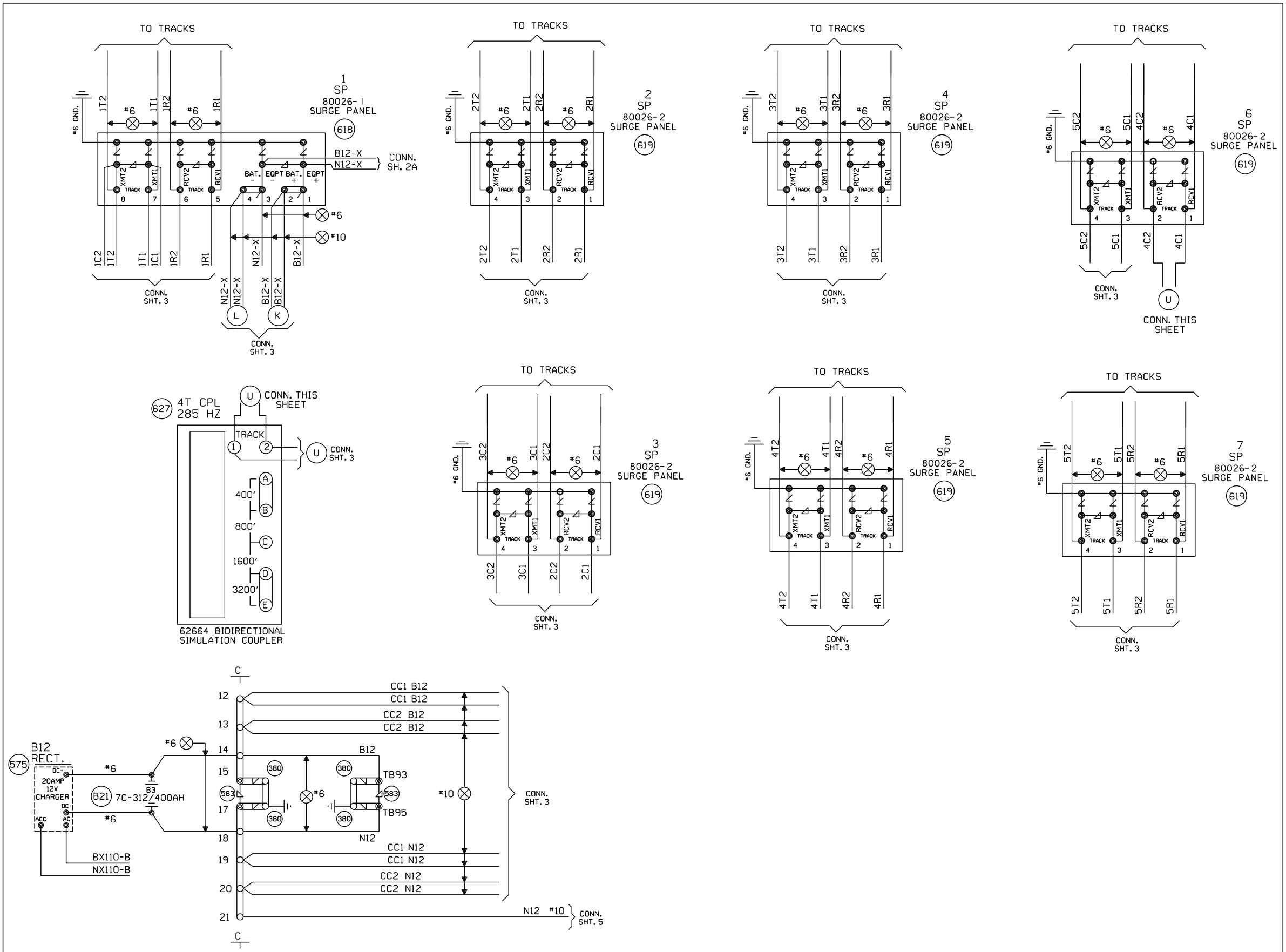

Revised: 08-19-16	MODIFICATION LEVEL		CIRCUIT MODIFICATIONS ARE NOT TO BE MADE WITHOUT AUTHORITY FROM THE OFFICE OF SIGNAL DESIGN
INSTALLED FLS/GATES WITH CWT AT M.P. 199.91	Q.A. LAST LEVEL CHECKED	DU	
	LAST LEVEL MOD THIS TYPICAL	DU	
	LAST LEVEL BY DESIGNER	DU	
PID: WO#: 20915	CHANGED FROM TYPICAL?	Y	
IS: 08-18-16 / NBT	REV 01.24.11 4K 4TKSPGFC.4		
Rec#: 26761 CJM/WIT /SMS /JTB			

Date: 07/03/13
Des: SMS
Chk: NBT
AFE: 20915

UNION PACIFIC RAILROAD

SHELBYVILLE, ILLINOIS
C.H. 7 (FAS 654)
SALEM SUBDIVISION

Office of Sr AVP Engineering - Signal/TCO Omaha, Nebraska

Sh.: 4
DOT 167864L
MP: 199.91
ID: 030119991.4X

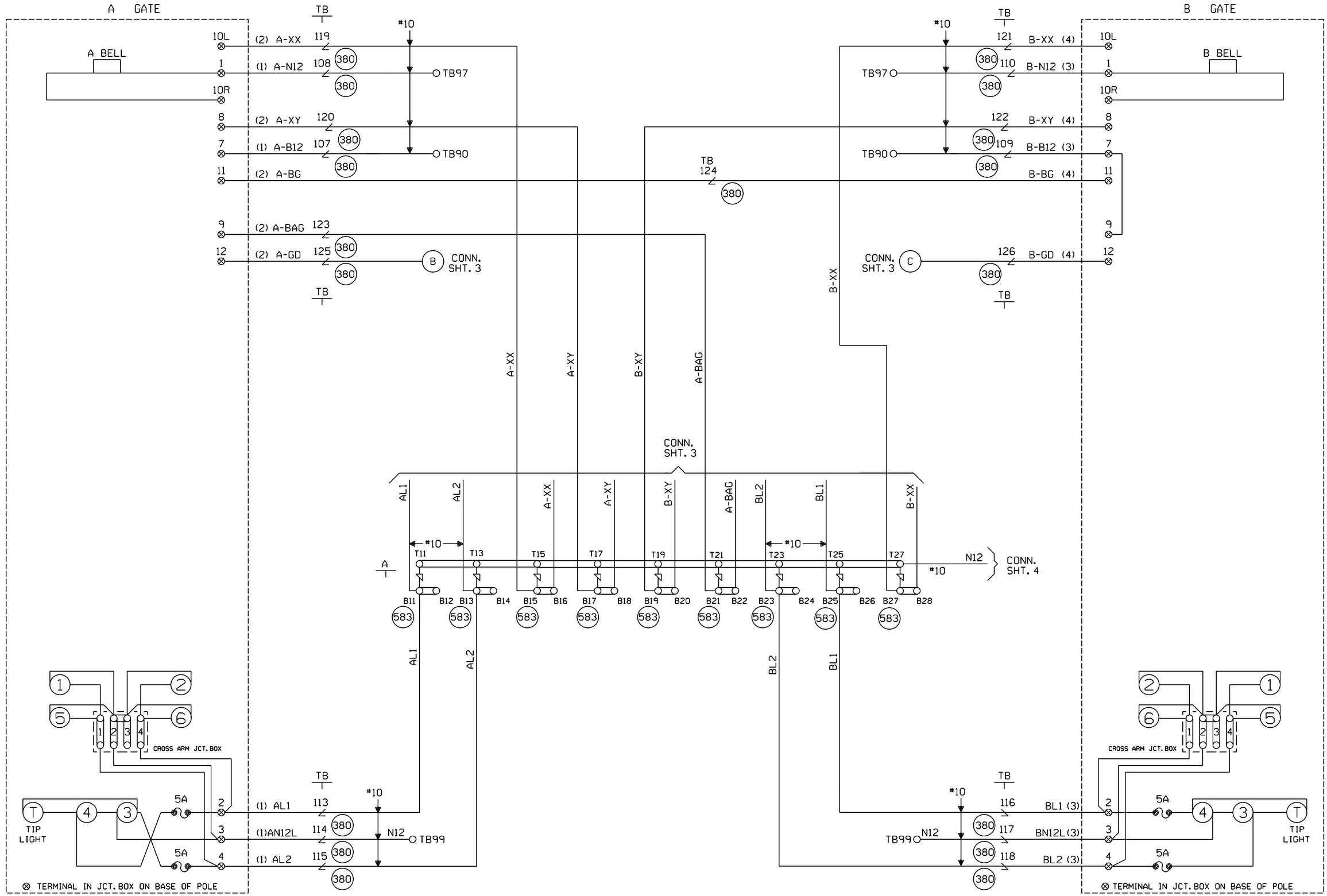

CABLE TABULATION

CABLE NO. 1 5C. NO.6 U.G.B.T. TO GATE A
CABLE NO. 2 7C. NO.14 U.G.B.T. TO GATE A
CABLE NO. 3 5C. NO.6 U.G.B.T. TO GATE B
CABLE NO. 4 7C. NO.14 U.G.B.T. TO GATE B

					Revised: 08-19-16 INSTALLED FLS/GATES WITH CWT AT M.P. 199.91 PID: WO#: 20915 IS: 08-18-16 / NBT Rec#: 26761 CJM/WIT/SMS/JTB	MODIFICATION LEVEL Q. A. LAST LEVEL CHECKED DU LAST LEVEL MOD THIS TYPICAL DU LAST LEVEL BY DESIGNER DU CHANGED FROM TYPICAL? Y REV 01.24.11 4K GFCTYP.5	CIRCUIT MODIFICATIONS ARE NOT TO BE MADE WITHOUT AUTHORITY FROM THE OFFICE OF SIGNAL DESIGN	Date: 07/03/13 Des: SMS Chk: NBT AFE: 20915	UNION PACIFIC RAILROAD SHELBYVILLE, ILLINOIS C.H. 7 (FAS 654) SALEM SUBDIVISION Office of Sr AVP Engineering - Signal/TCO Omaha, Nebraska	Sh.: 5 DOT 167864L MP: 199.91 ID: 030119991.5X

WCH 3593-E

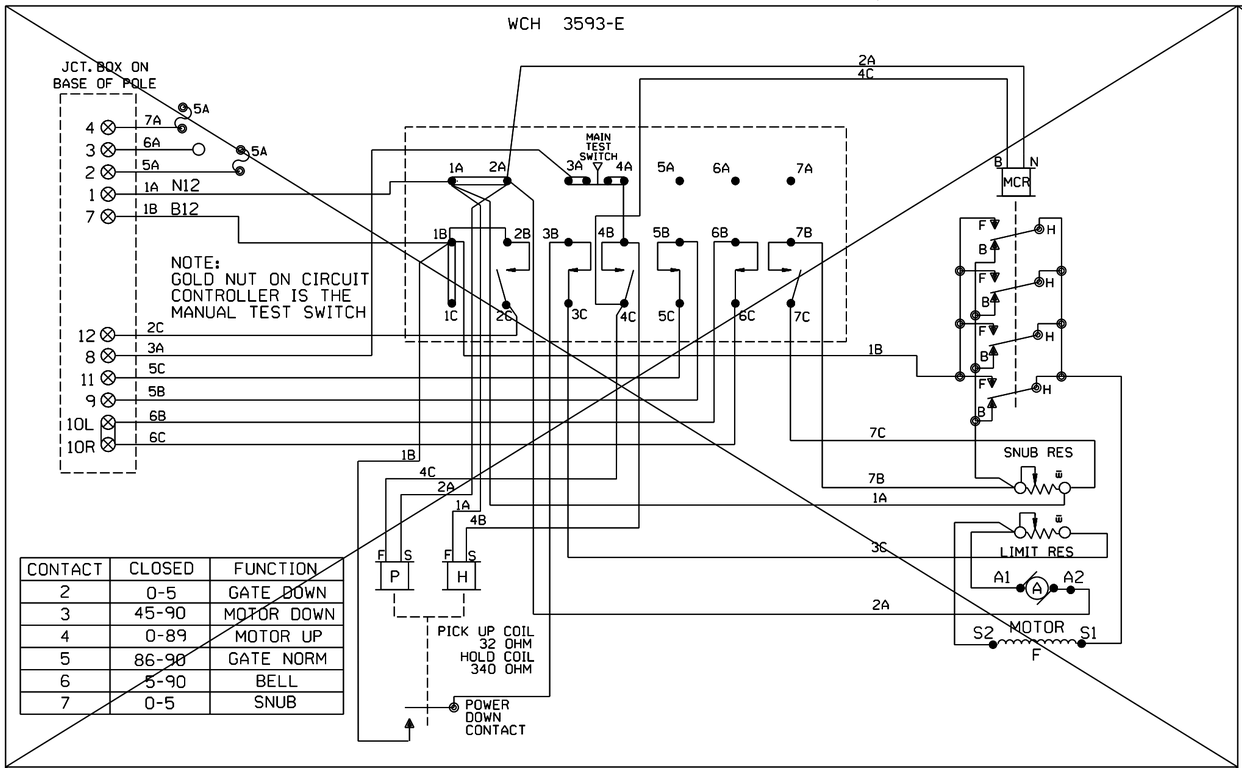

CONTACT	CLOSED	FUNCTION
2	0-5	GATE DOWN
3	45-90	MOTOR DOWN
4	0-89	MOTOR UP
5	86-90	GATE NORM
6	5-90	BELL
7	0-5	SNUB

WCH 3597-E

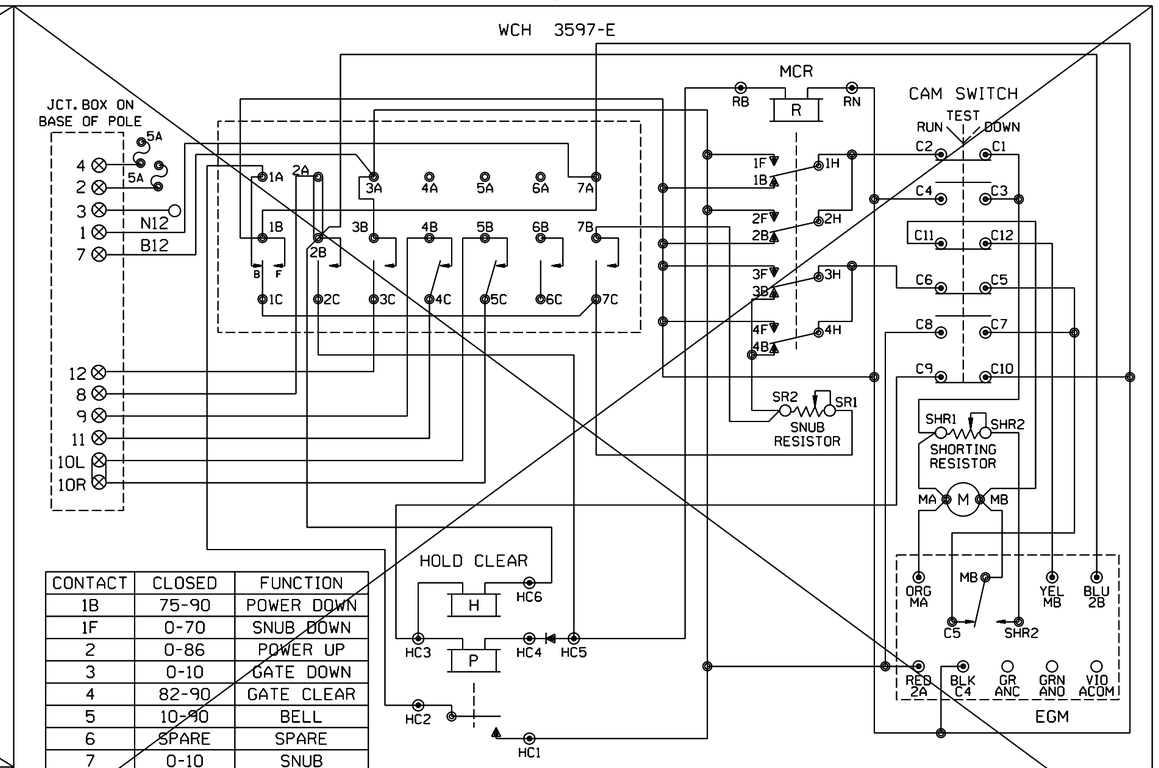

CONTACT	CLOSED	FUNCTION
1B	75-90	POWER DOWN
1F	0-70	SNUB DOWN
2	0-86	POWER UP
3	0-10	GATE DOWN
4	82-90	GATE CLEAR
5	10-90	BELL
6	SPARE	SPARE
7	0-10	SNUB

WCH 3597-RB

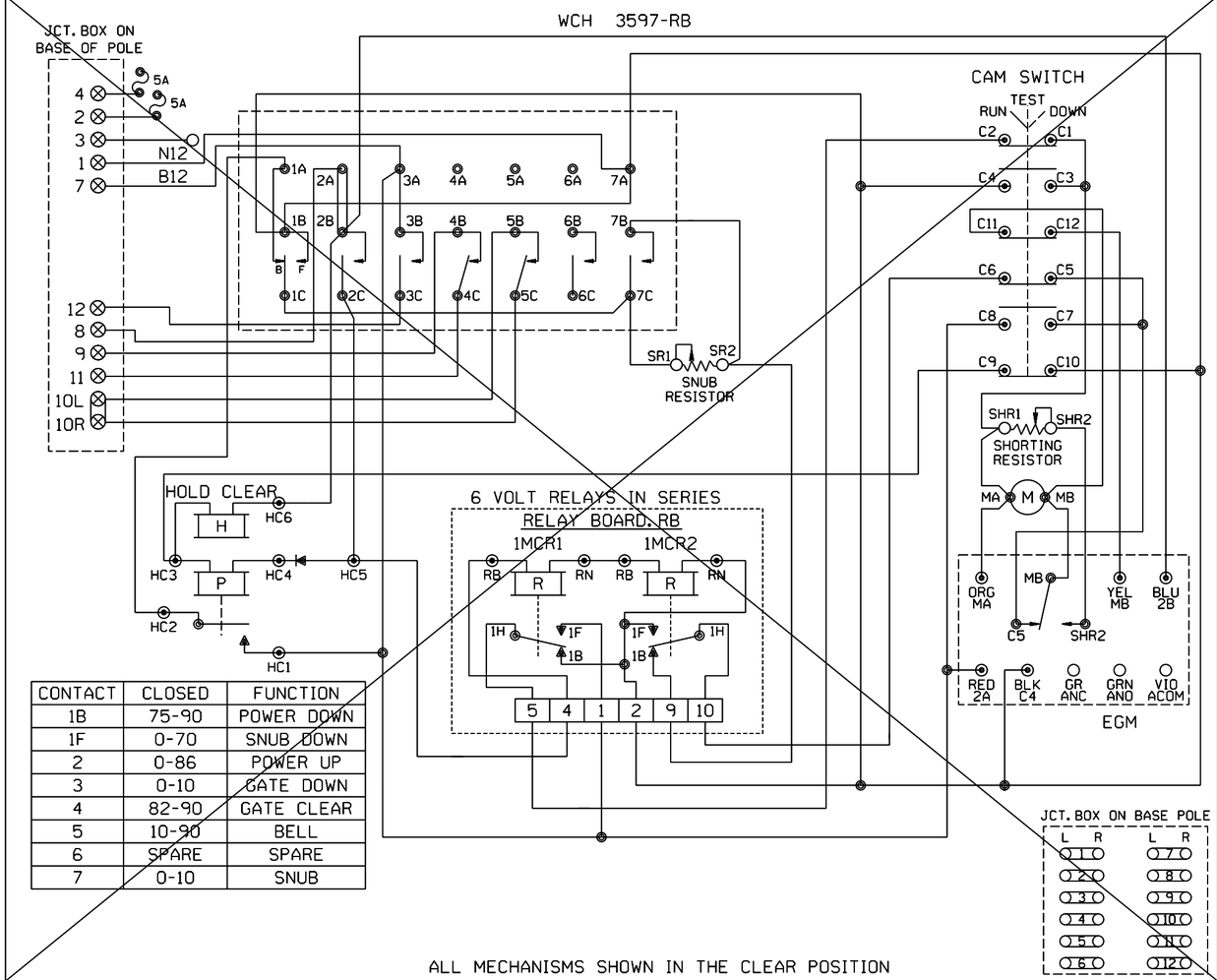

CONTACT	CLOSED	FUNCTION
1B	75-90	POWER DOWN
1F	0-70	SNUB DOWN
2	0-86	POWER UP
3	0-10	GATE DOWN
4	82-90	GATE CLEAR
5	10-90	BELL
6	SPARE	SPARE
7	0-10	SNUB

ALL MECHANISMS SHOWN IN THE CLEAR POSITION

SAFETRAN S-60

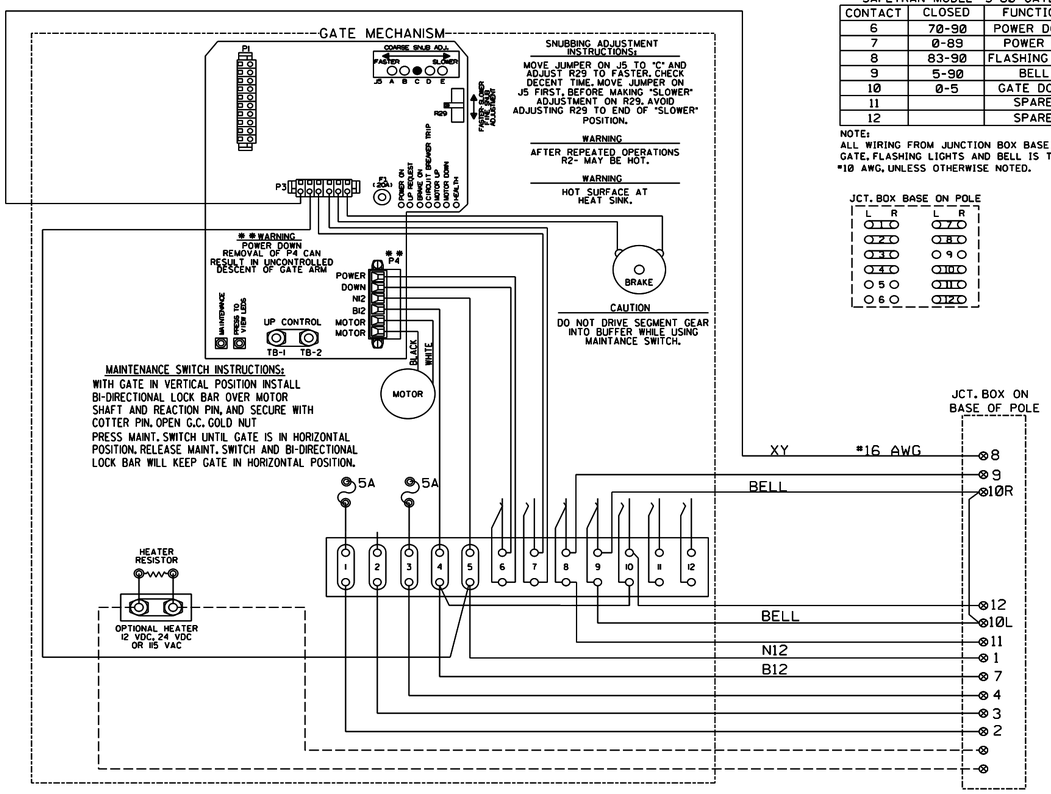

SAFETRAN MODEL "S-60" GATE

CONTACT	CLOSED	FUNCTION
6	70-90	POWER DOWN
7	0-89	POWER UP
8	83-90	FLASHING LGT.
9	5-90	BELL
10	0-5	GATE DOWN
11		SPARE
12		SPARE

NOTE:
ALL WIRING FROM JUNCTION BOX BASE TO GATE. FLASHING LIGHTS AND BELL IS TO BE #10 AWG, UNLESS OTHERWISE NOTED.

JCT. BOX BASE ON POLE

L	R	L	R
1		7	
2		8	
3		9	
4		10	
5		11	
6		12	

Revised: 08-19-16 INSTALLED FLS/GATES WITH CWT AT M.P. 199.91 PID: WO#: 20915 IS: 08-18-16 / NBT Req#: 26761 CJM/WIT/GMS/JTB	MODIFICATION LEVEL Q.A. LAST LEVEL CHECKED — DU LAST LEVEL MOD THIS TYPICAL — DU LAST LEVEL BY DESIGNER — DU CHANGED FROM TYPICAL? — N REV 01.24.11 4K GWIRING.7	CIRCUIT MODIFICATIONS ARE NOT TO BE MADE WITHOUT AUTHORITY FROM THE OFFICE OF SIGNAL DESIGN	Date: 07/03/13 Des: SMS Chk: NBT AFE: 20915	**UNION PACIFIC RAILROAD** SHELBYVILLE, ILLINOIS C.H. 7 (FAS 654) SALEM SUBDIVISION Office of Sr AVP Engineering - Signal/TCO Omaha, Nebraska	Sh.: 6 DOT 167864L MP: 199.91 ID: 030119991.6X

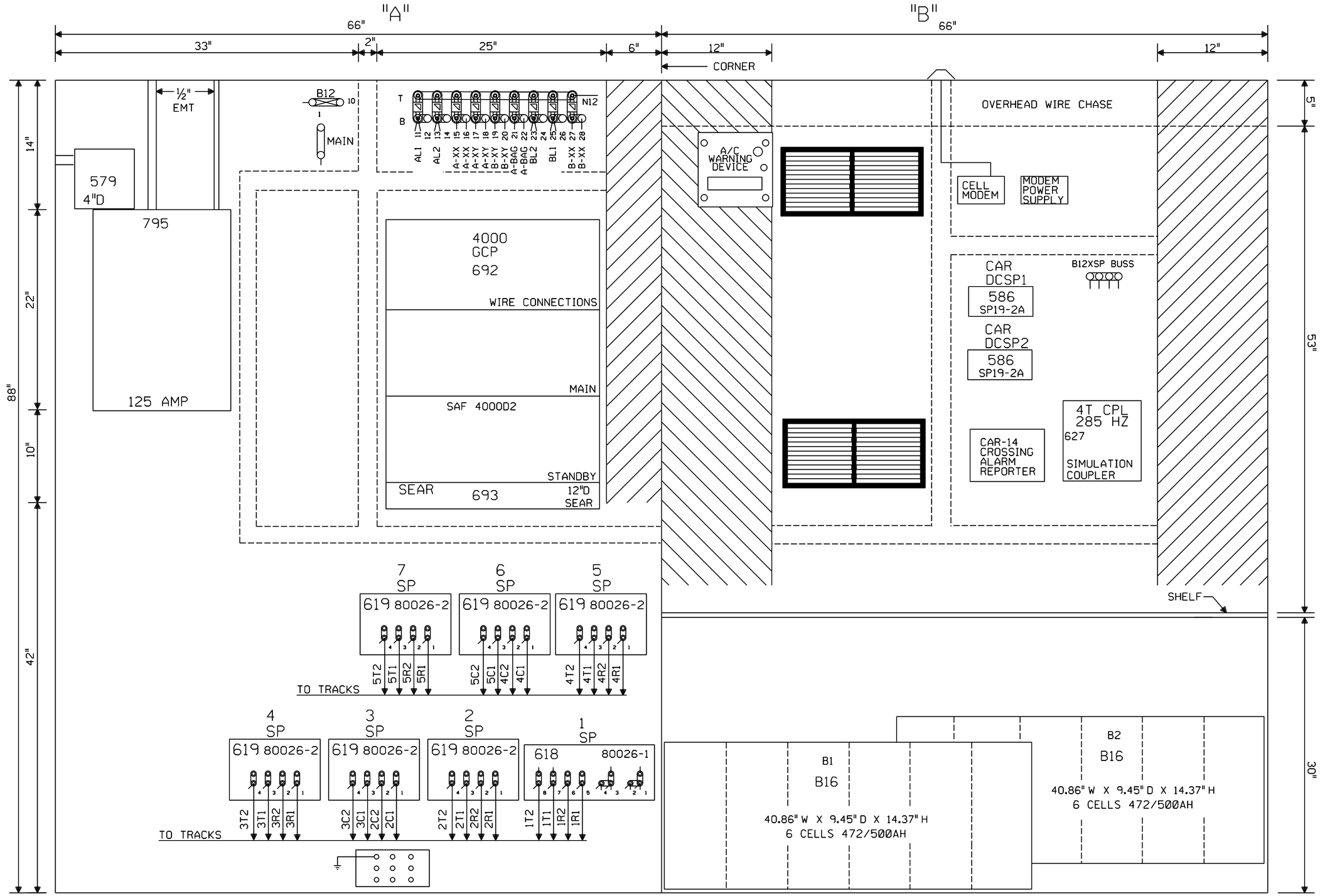

NOTE: ALL DIMENSIONS SHOWN ARE APPROXIMATE.

					Revised: 08-19-16 INSTALLED FLS/GATES WITH CWT AT M.P. 199.91 PID: WO#: 20915 IS: 08-18-16 / NBT Rec#: 26761 CJM/WIT/SMS/JTB	MODIFICATION LEVEL		CIRCUIT MODIFICATIONS ARE NOT TO BE MADE WITHOUT AUTHORITY FROM THE OFFICE OF SIGNAL DESIGN	Date: 07/03/13 Des: SMS Chk: NBT AFE: 20915	UNION PACIFIC RAILROAD SHELBYVILLE, ILLINOIS C.H. 7 (FAS 654) SALEM SUBDIVISION Office of Sr AVP Engineering - Signal/TCO Omaha, Nebraska	Sh.: 7 DOT 167864L MP: 199.91 ID: 030119991.7X
						Q.A. LAST LEVEL CHECKED	DU				
						LAST LEVEL MOD THIS TYPICAL	DU				
						LAST LEVEL BY DESIGNER	DU				
						CHANGED FROM TYPICAL?	Y				
						REV 01.24.11 4K 4TKGFC.8					

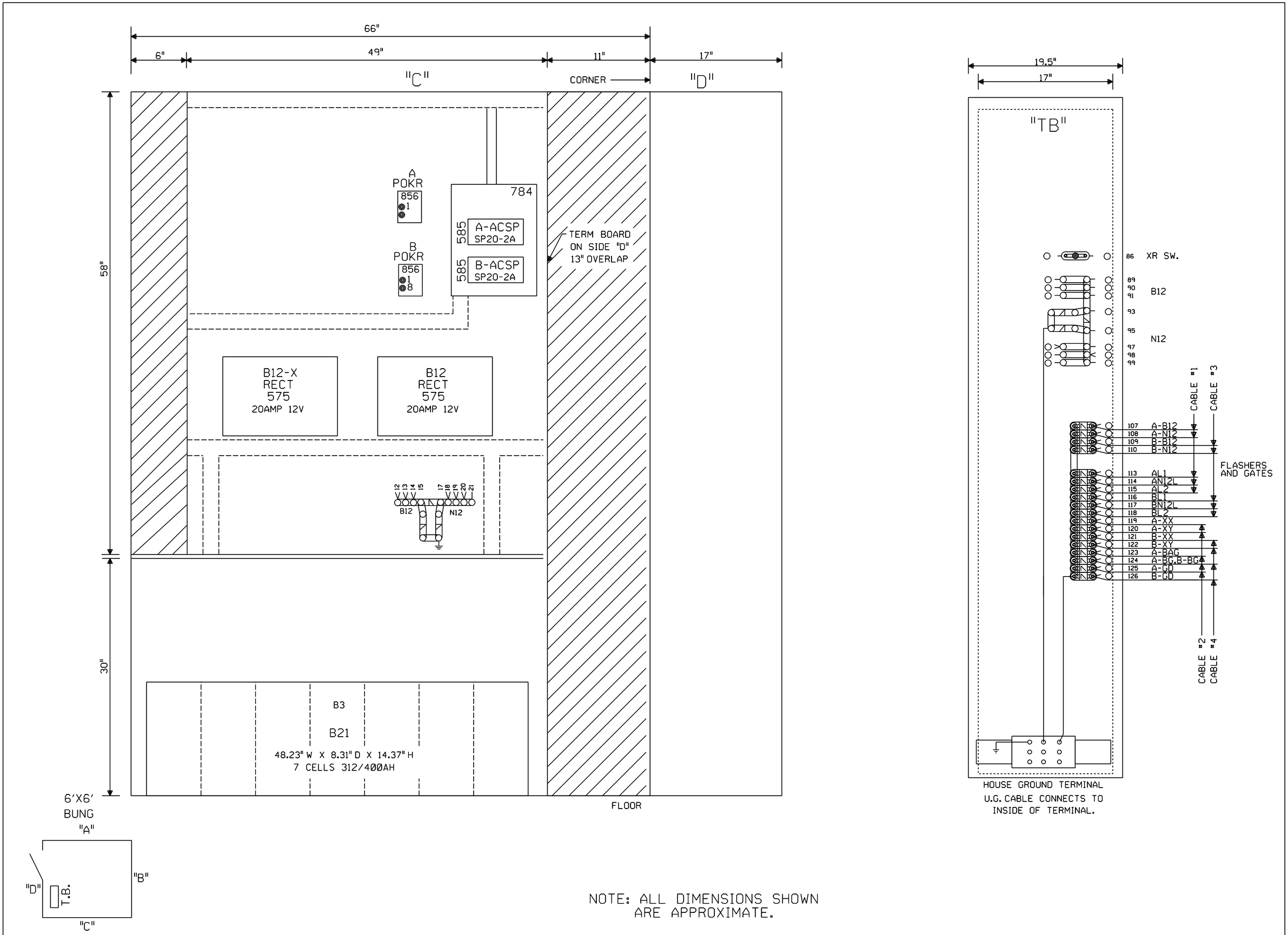

NOTE: ALL DIMENSIONS SHOWN
ARE APPROXIMATE.

					Revised: 08-19-16 INSTALLED FLS/GATES WITH CWT AT M.P. 199.91 PID: WO#: 20915 IS: 08-18-16 / NBT Rec#: 26761 CJM/WIT/SMS/JTB	MODIFICATION LEVEL Q.A. LAST LEVEL CHECKED DU LAST LEVEL MOD THIS TYPICAL DU LAST LEVEL BY DESIGNER DU CHANGED FROM TYPICAL? Y REV 01.24.11 4K GFC.9	CIRCUIT MODIFICATIONS ARE NOT TO BE MADE WITHOUT AUTHORITY FROM THE OFFICE OF SIGNAL DESIGN	Date: 07/03/13 Des: SMS Chk: NBT AFE: 20915	UNION PACIFIC RAILROAD SHELBYVILLE, ILLINOIS C.H. 7 (FAS 654) SALEM SUBDIVISION Office of Sr AVP Engineering - Signal/TCO Omaha, Nebraska	Sh.: 8 DOT 167864L MP: 199.91 ID: 030119991.8X

Minimum Program Steps Report

Location and SIN

DOT Number: 167864L
Milepost Number: 199.91
Site Name: SHELBYVILLE, IL

SIN: 762010010016 *

* Parameter is part of office check number calculation.

MCF and Template Selection

MCF Name: GCP-T6X-02-4.mcf
MCF Revision: 24
MCFCRC: 09FC363B
UCN: FFFFFFFF

Template = 2D:1 Bi, 5 Rem (OCCN) *

* Parameter is part of office check number calculation.

Minimum Program Steps

TEMPLATE: module configuration
Track 5/RIO 2 Slot = Track (OCCN) *

TEMPLATE: track 1-Bi, Island
Track 1 : GCP Frequency = 348 Hz (Field,TCN)
Track 1 : Approach Distance = 3081 ft (Set in Field,TCN)
Track 1 : Prime Warning Time = 25 sec (OCCN) *
Track 1 : GCP Transmit Level = Medium (Set in Field,TCN)
Track 1 : Isl Frequency = 8.3 kHz (Set in Field)

TEMPLATE: track 2-Remote Prime
Track 2 : GCP Frequency = 790 Hz (Field,TCN)
Track 2 : Approach Distance = 355 ft (Set in Field,TCN)
Track 2 : Prime Warning Time = 25 sec (OCCN) *
Track 2 : Prime Offset Distance = 380 ft (Set in Field)
Track 2 : GCP Transmit Level = Medium (Set in Field,TCN)

TEMPLATE: track 3-Remote Prime
Track 3 : GCP Frequency = 645 Hz (Field,TCN)
Track 3 : Approach Distance = 1000 ft (Set in Field,TCN)
Track 3 : Prime Warning Time = 25 sec (OCCN) *
Track 3 : Prime Offset Distance = 735 ft (Set in Field)
Track 3 : GCP Transmit Level = Medium (Set in Field,TCN)

TEMPLATE: track 4-Remote Prime
Track 4 : GCP Frequency = 285 Hz (Field,TCN)
Track 4 : Approach Distance = 2346 ft (Set in Field,TCN)
Track 4 : Prime Warning Time = 25 sec (OCCN) *
Track 4 : Prime Offset Distance = 735 ft (Set in Field)
Track 4 : GCP Transmit Level = Medium (Set in Field,TCN)
Track 4 : Uni/Bi/Sim-Bidirnl = Sim. Bidirnl (OCCN) *

TEMPLATE: track 5-Remote Prime
Track 5 : GCP Frequency = 970 Hz (Field,TCN)
Track 5 : Approach Distance = 346 ft (Set in Field,TCN)
Track 5 : Prime Warning Time = 25 sec (OCCN) *
Track 5 : Prime Offset Distance = 389 ft (Set in Field)

Track 5 : GCP Transmit Level = Medium (Set in Field,TCN)

TEMPLATE: AND 1 XR
AND 1 Enable Used = Yes (OCCN) *

TEMPLATE: SSCC
SSCC 1 : Lamp Neutral Test = Off (Set in Field)
SSCC 2 : Lamp Neutral Test = Off (Set in Field)

TEMPLATE: OOS
OOS Control = OOS IPs (OCCN) *
T2 OOS Control = None (OCCN) *
T3 OOS Control = None (OCCN) *
T4 OOS Control = None (OCCN) *

TEMPLATE: OOS T5/T6
T5 OOS Control = None (OCCN) *

TEMPLATE: IP assignment 1
IN 1.2 = Out Of Service IP 1 (OCCN) *

TEMPLATE: IP assignment SSCC
IN 7.1 = AND 1 XR Enable (OCCN) *

GCP: track 1
Track 1 : Island Distance = 120 ft (Set in Field,TCN)

ISLAND: track 1
Track 1 : Pickup Delay (2s +) = 2 sec (OCCN) *

ADVANCED: site options
Daylight Savings = Off (Set in Field)

* Parameter is part of office check number calculation.

Check Numbers

Office Check Number: 0333BB94
Config. Check Number: 4EB07B41
(Based on MCF Revision 24)

Parameters not part of office check number calculation:

Track 1 : GCP Frequency = 348 Hz
Track 1 : Approach Distance = 3081 ft (Set in Field)
Track 1 : GCP Transmit Level = Medium (Set in Field)
Track 1 : Isl Frequency = 8.3 kHz
Track 2 : GCP Frequency = 790 Hz
Track 2 : Approach Distance = 355 ft (Set in Field)
Track 2 : Prime Offset Distance = 380 ft (Set in Field)
Track 2 : GCP Transmit Level = Medium (Set in Field)
Track 3 : GCP Frequency = 645 Hz
Track 3 : Approach Distance = 1000 ft (Set in Field)
Track 3 : Prime Offset Distance = 735 ft (Set in Field)
Track 3 : GCP Transmit Level = Medium (Set in Field)
Track 4 : GCP Frequency = 285 Hz
Track 4 : Approach Distance = 2346 ft (Set in Field)
Track 4 : Prime Offset Distance = 735 ft (Set in Field)
Track 4 : GCP Transmit Level = Medium (Set in Field)
Track 5 : GCP Frequency = 970 Hz
Track 5 : Approach Distance = 346 ft (Set in Field)
Track 5 : Prime Offset Distance = 389 ft (Set in Field)
Track 5 : GCP Transmit Level = Medium (Set in Field)

SSCC 1 : Lamp Neutral Test = Off (Set in Field)
SSCC 2 : Lamp Neutral Test = Off (Set in Field)
Track 1 : Island Distance = 120 ft (Set in Field)
Daylight Savings = Off (Set in Field)

Comments

<none>

Configuration Package File

Filename: 030119991_167864L.pac
Path: C:\Users\4\AppData\Local\Temp\7\
Date/Time: 11/06/2014 8:16:44
DT Version: 5.3.3