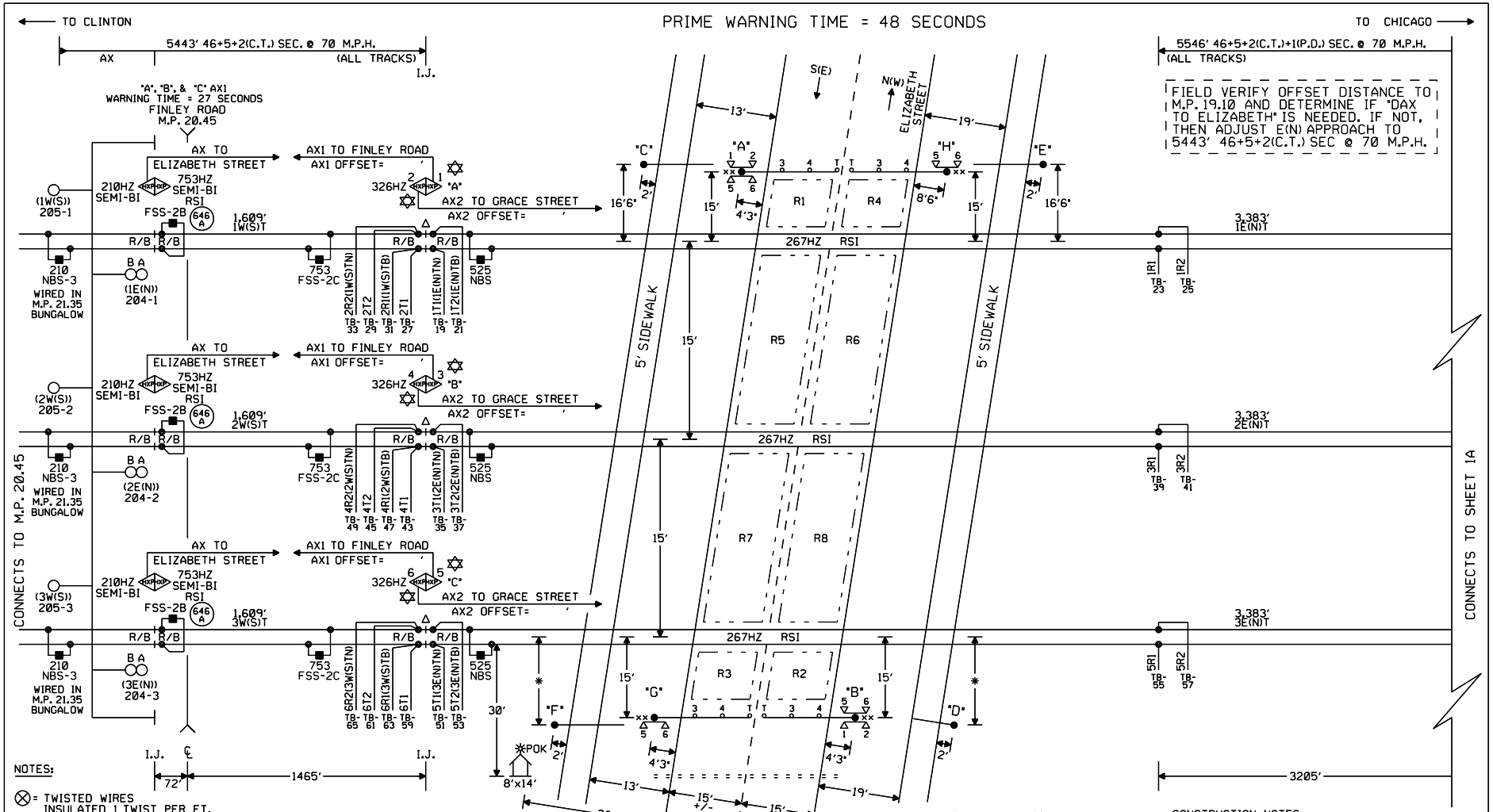

NOTES:

⊗ = TWISTED WIRES INSULATED 1 TWIST PER FT. ALL TRACK WIRES 2C. #6

TRANSMITTER AND RECEIVER LEADS TO BE SEPARATED BY AT LEAST 12" IN TRENCH. LENGTHS SHOULD NOT EXCEED MANUFACTURES RECOMMENDATION.

TOP OF FOUNDATION TO BE AT SAME ELEVATION AS THE SURFACE OF THE TRAVELED WAY & NO MORE THAN 4" ABOVE THE SURFACE OF THE GROUND.

ALL BUNGALOW WIRING TO BE #16 AWG FLEX UNLESS OTHERWISE SPECIFIED EXCEPT ALL GROUND WIRE TO BE #6 AWG FLEX OR LARGER.

ALL WIRING IN GATE MECHANISM TO BE #10 "AWG FLEX".

REFER TO UP STANDARD DWG FOR BUNGALOW GROUNDING.

PORTABLE GENERATOR EXTENSION CORD FOR 240V TO 240V IS PROVIDED AS WELL AS A 120V TO 240V ADAPTER.

ALL LIGHTS TO BE 12" ROUNDELS.

= = = = = = 4" X 100' CONDUIT

LIGHTS: LED LIGHTS

GATE A: 19' GATE E: 10'
GATE B: 19' GATE F: 10'
GATE C: 10' GATE G: 19'
GATE D: 7' GATE H: 23'

xx = BELL

OFFSET AND ISLAND DISTANCES TO BE VERIFIED BY FIELD

TRK 1 ISLAND DISTANCE 178' MINIMUM 120' REQUIRED
TRK 2 ISLAND DISTANCE 178' MINIMUM 120' REQUIRED
TRK 3 ISLAND DISTANCE 178' MINIMUM 120' REQUIRED

PREFERRED ISLAND WIRES CONNECTIONS ARE A MINIMUM 50' FROM EDGE OF ROAD

✡ = HXP TO OPERATE IN SEMI-BI DIRECTIONAL MODE.

△ = ENSURE TRACK POLARITY IS TRANSPOSED ACROSS ALL INSULATED JOINTS.

FOUR-QUAD GATE CONTROL SYSTEM LOOP LOCATION:

1.) 12" FROM CONCRETE CROSSING PANEL. MAY VARY FROM 6" TO 12" DEPENDING ON PAVEMENT QUALITY.

2.) 2' FROM CROSSING CENTERLINE.

3.) 3.5' FROM GATE ARM.

4.) 2' FROM THE EDGE OF THE TRAVELED WAY. MAY BE INCREASED UP TO A MAXIMUM OF 5' WHERE AN IMPROVED SHOULDER OR OTHER EXISTS.

5.) MAXIMUM LOOP WIDTH NOT TO EXCEED 8' AND MINIMUM WIDTH TYPICALLY NOT TO BE LESS THAN 5'. LOOPS BETWEEN TRACKS MUST NOT BE LESS THAN 3'. HOWEVER SMALLER LOOPS ARE ACCEPTABLE.

6.) DISTANCE BETWEEN ADJACENT LOOPS FOR ONE DIRECTION OF TRAFFIC MUST NOT EXCEED 13'.

7.) MAXIMUM LOOP AREA NOT TO EXCEED 144 SQ. FT.

8.) MAXIMUM LENGTH OF THE LONGEST SIDE OF A LOOP SHALL NOT EXCEED 28'6".

— - - — = FOUR-QUAD GATE CONTROL LOOP

CONSTRUCTION NOTES:

1. GATE PLACEMENT AND GATE LENGTH TO BE VERIFIED BY THE ICC. EXIT GATES WILL NOT BE INSTALLED UNTIL AFTER TEST PERIOD.
2. REUSE EXISTING CABIN AND CWT.
3. ORDER AND INSTALL GE ELECTROLOGIXS FOUR QUADRANT GATE CONTROL SYSTEM.
4. ORDER AND INSTALL (2) U-1400 LOOP PROCESSORS, (2) MODEL 805 HARNESSES, AND WAGO STRIP.
5. ORDER AND INSTALL (2) ANSALDO 150EVT-SD VITAL TIMER RELAYS TO SIMULATE EXIT GATE GATE-DOWN DURING TEST PERIOD.
6. ORDER AND INSTALL (2) 40-AMP RECTIFIERS (TAB 577) FOR B12 AND B12-X.
7. ORDER AND INSTALL (2) SETS OF B12-X BATTERY (TAB B17), AND (1) SET B12 BATTERY (TAB B18).
8. ORDER AND INSTALL (8) LOOPS: (4) PLC-32-50, AND (4) PLC-25-75.

✱ = FIELD TO PROVIDE MEASUREMENT

REDRAWN SHEET

Designed: 02/12/15
INSTALL 4-QUAD GATES AND LOOPS ELIZABETH STREET M.P. 20.11
Rec*: WO*: 21747 /NDR
IS: /XRL /JTB

MODIFICATION LEVEL	
O. A. LAST LEVEL CHECKED	DU
LAST LEVEL MOD THIS TYPICAL	DU
LAST LEVEL BY DESIGNER	DU
CHANGED FROM TYPICAL?	Y

my 01.24.11 4K 2TKEGMS.1

CIRCUIT MODIFICATIONS ARE NOT TO BE MADE WITHOUT AUTHORITY FROM THE OFFICE OF SIGNAL DESIGN

Date: 02/12/15
Des: XRL
Chk: NDR
AFE: 21747

UNION PACIFIC RAILROAD
LOMBARD, ILLINOIS
ELIZABETH STREET
GENEVA SUBDIVISION
Office of AVP Engineering - Signal Omaha, Nebraska

Sh.: 1
DOT 174944W
MP: 20.11
ID: GEN2011.IX

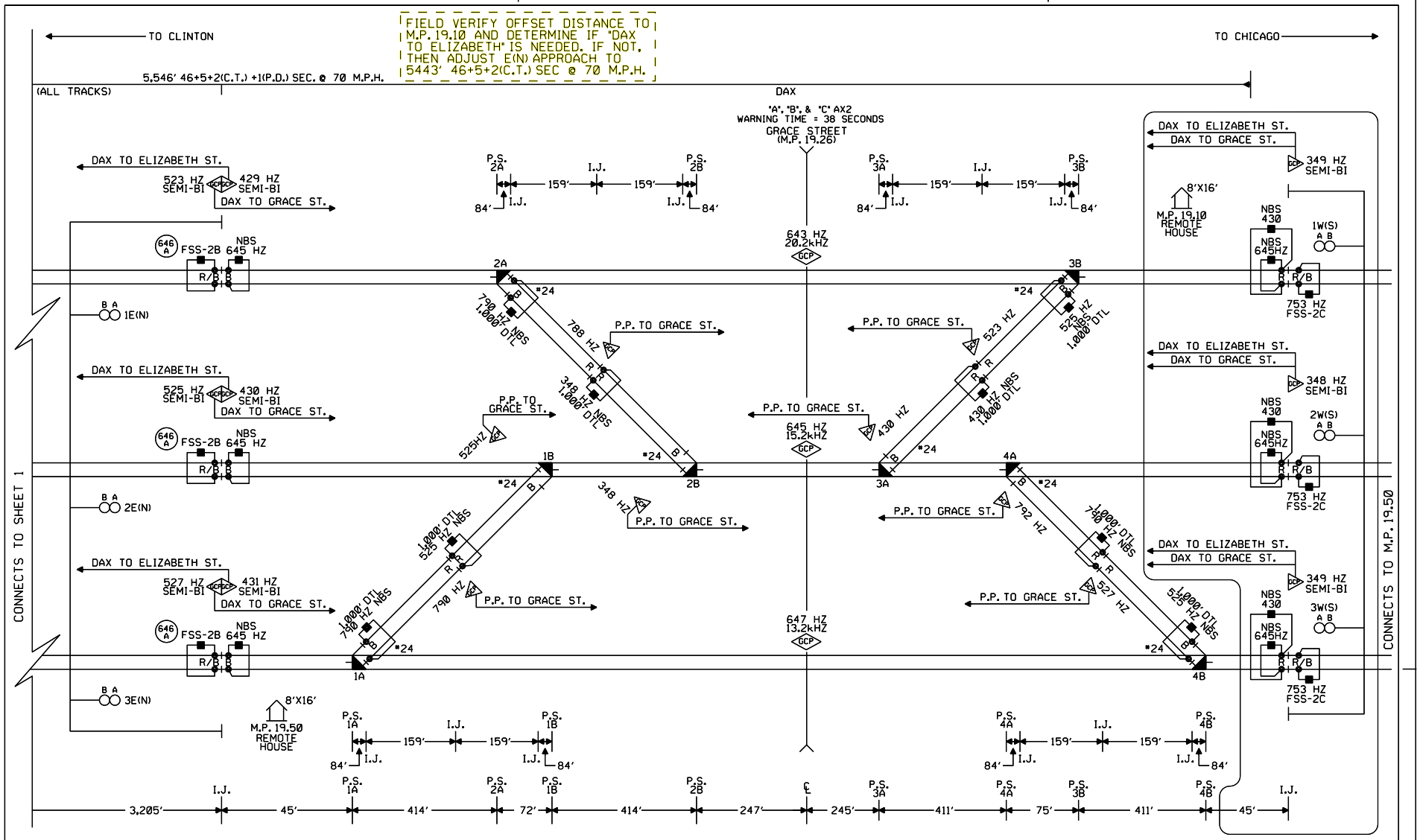

LOMBARD, ILLINOIS
ELIZABETH STREET
M.P. 20.11
GENEVA SUBDIVISION
D.O.T.#174 944W

Designed: 02/12/15	Revised: 05/16/14	Revised: 05/14/14
INSTALL 4-QUAD GATES AND LOOPS ELIZABETH STREET M.P. 20.11	INSTALL HALF BLOCK SYSTEM FROM LOMBARD TO VILLA PARK, IL. PHASE 1 PART 4 (M.P. 20.45 - 18.21)	INSTALL HALF BLOCK SYSTEM FROM COLLEGE AVE. TO LOMBARD, IL. PHASE 2 PART 2 (M.P. 23.78 - 20.45)
Rec#: WO#: 21747	Rec#: 19106 WO#: 88113	Rec#: 19112 WO#: 89952
IS: /NDR /XRL/JTB	IS: 01/07/13 /MWK SDZ/PRS/CTC/MDF	IS: 03/15/13 JJL/ TKC/PRS/CTC/MDF

MODIFICATION LEVEL	
O. A. LAST LEVEL CHECKED	DO
LAST LEVEL MOD THIS TYPICAL	DO
LAST LEVEL BY DESIGNER	DO
CHANGED FROM TYPICAL?	Y
mv 02.01.08 4K 2TKUGTYP.1	

CIRCUIT MODIFICATIONS ARE NOT TO BE MADE WITHOUT AUTHORITY FROM THE OFFICE OF SIGNAL DESIGN

DES: CTC
DIG: CTC
CHK: JJL
A.F.E. 89952
ID= GEN2011.IAX

UNION PACIFIC RAILROAD

CHICAGO, ILLINOIS TO
CLINTON, IOWA
C.T.C. CIRCUITS

Office of Sr AVP Engineering - Signal/TCO Omaha, Nebraska

DATE 06-16-08
SHEET 1A
DWG 20.11
GEN

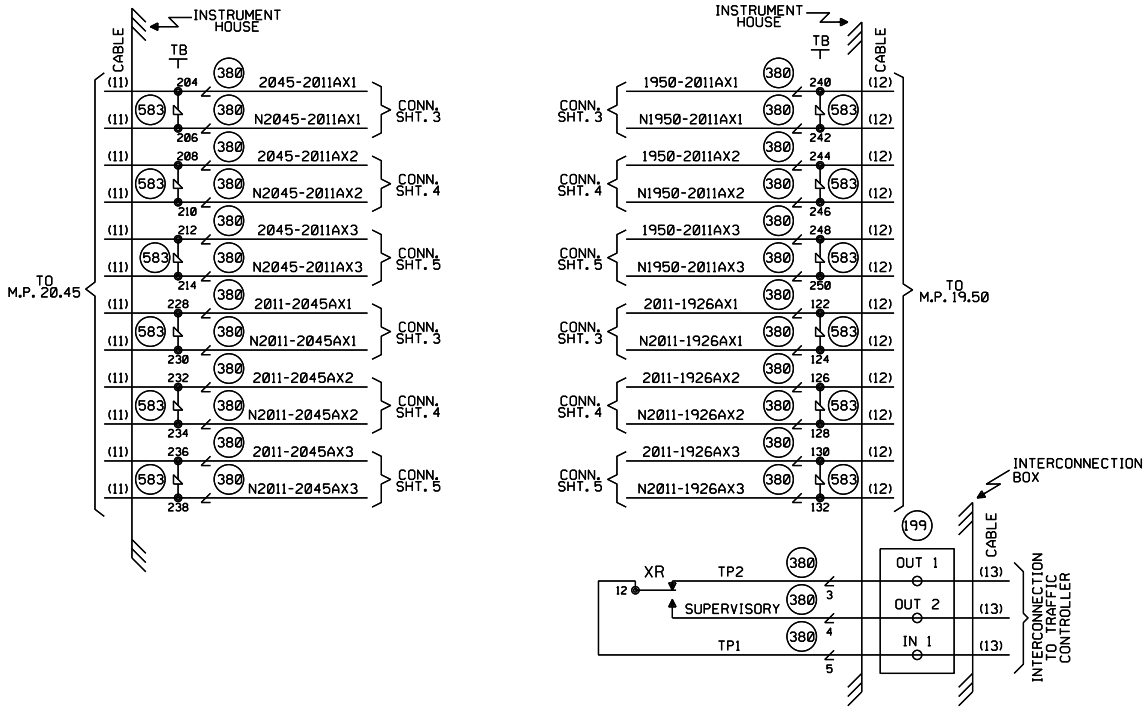

LOMBARD, ILLINOIS
ELIZABETH STREET
M.P. 20.11
GENEVA SUBDIVISION
D.O.T.#174 944W

						Revised: 05/16/14 INSTALL HALF BLOCK SYSTEM FROM LOMBARD TO VILLA PARK, IL. PHASE 1 PART 4 (M.P. 20.45 - 18.21) Rec#: 19106 WO#: 88113 IS: 01/07/13 /MWK SDZ/PRS/CTC/MDF	Revised: 05/14/14 INSTALL HALF BLOCK SYSTEM FROM COLLEGE AVE. TO LOMBARD, IL. PHASE 2 PART 2 (M.P. 23.78 - 20.45) Rec#: 19112 WO#: 89952 IS: 03/15/13 JJL/ TKC/PRS/CTC/MDF	CIRCUIT MODIFICATIONS ARE NOT TO BE MADE WITHOUT AUTHORITY FROM THE OFFICE OF SIGNAL DESIGN	DES: CTC DIG: CTC CHK: JJL A.F.E. 89952 ID= GEN2011.1BX	UNION PACIFIC RAILROAD CHICAGO, ILLINOIS TO CLINTON, IOWA C.T.C. CIRCUITS Office of Sr AVP Engineering - Signal/TCO Omaha, Nebraska	DATE 06-16-08 SHEET 1B DWG 20.11 GEN