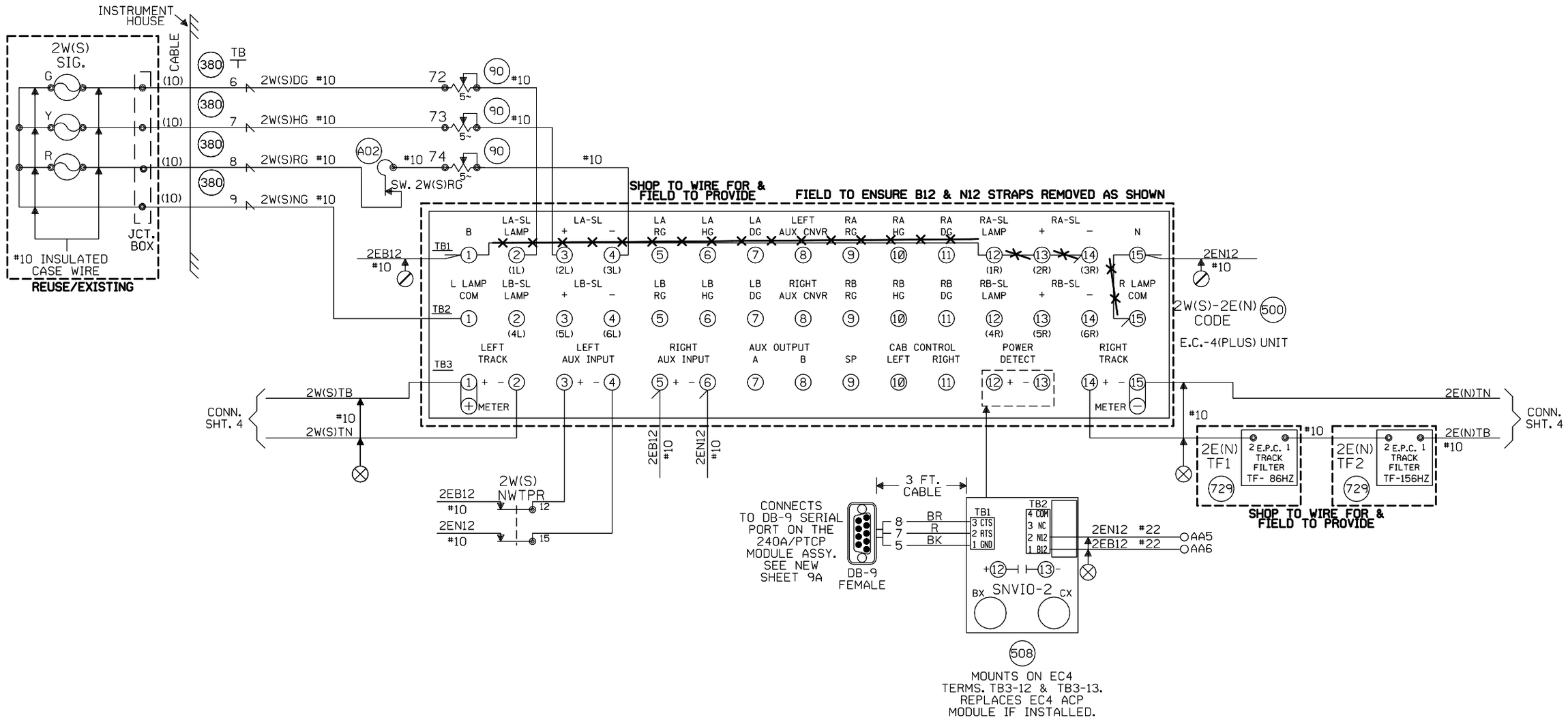

NEW SHEET

Designed: 12/21/15 INSTALL FLS/GATES & CONSTANT WARNING AT TOUHY AVENUE M.P. 8.81 Rec#: WO#: 32327 IS: /NBT /PRS/JTB	MODIFICATION LEVEL		CIRCUIT MODIFICATIONS ARE NOT TO BE MADE WITHOUT AUTHORITY FROM THE OFFICE OF SIGNAL DESIGN	Date: 12/21/15 Des: PRS Chk: NBT AFE: 32327	UNION PACIFIC RAILROAD TWO TRACK INTERMEDIATE MILWAUKEE SUBDIVISION Office of AVP Engineering - Signal Omaha, Nebraska
	Q.A. LAST LEVEL CHECKED	DD			Sh.: 9
	LAST LEVEL MOD THIS TYPICAL	DD			
	LAST LEVEL BY DESIGNER	DU			MP: 8.81
	CHANGED FROM TYPICAL?	Y			ID: NEW0881.9S
	REV 01.02.09 2TE4INTC.1				

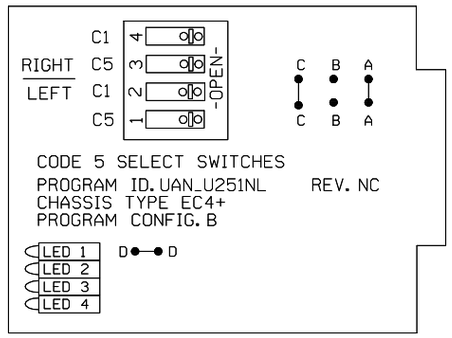

215D MODULE

215D "A" CONFIGURATION = "B" JUMPERED, "A","C" & "D" OPEN
215D "B" CONFIGURATION = "B" OPEN, "A","C" & "D" JUMPERED

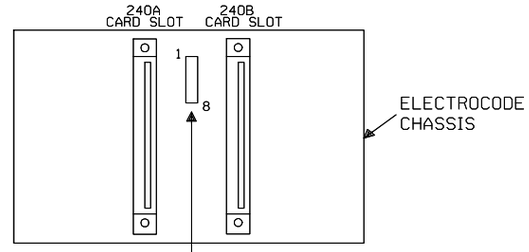

ASSIGNED CHASSIS I.D.
STRAPPING

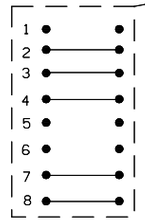

SHUNT LOCATED ON BACK OF CHASSIS
BETWEEN 240A & 240B CARD SLOT

NOTES:

1. The PTC Processor Application ID and PTC Processor Chassis ID shunts are not used. (Leave shunts intact.)
   - ● Shunt intact
   - ○ Shunt open (punched out)
   - Switch On
   - NO Switch Off
2. The Application Shunts A and B need to match the old 230 cards Application ID when applicable.

DB-9 MALE
SERIAL PORT
USED FOR SNVIO
MODULE CONNECTION

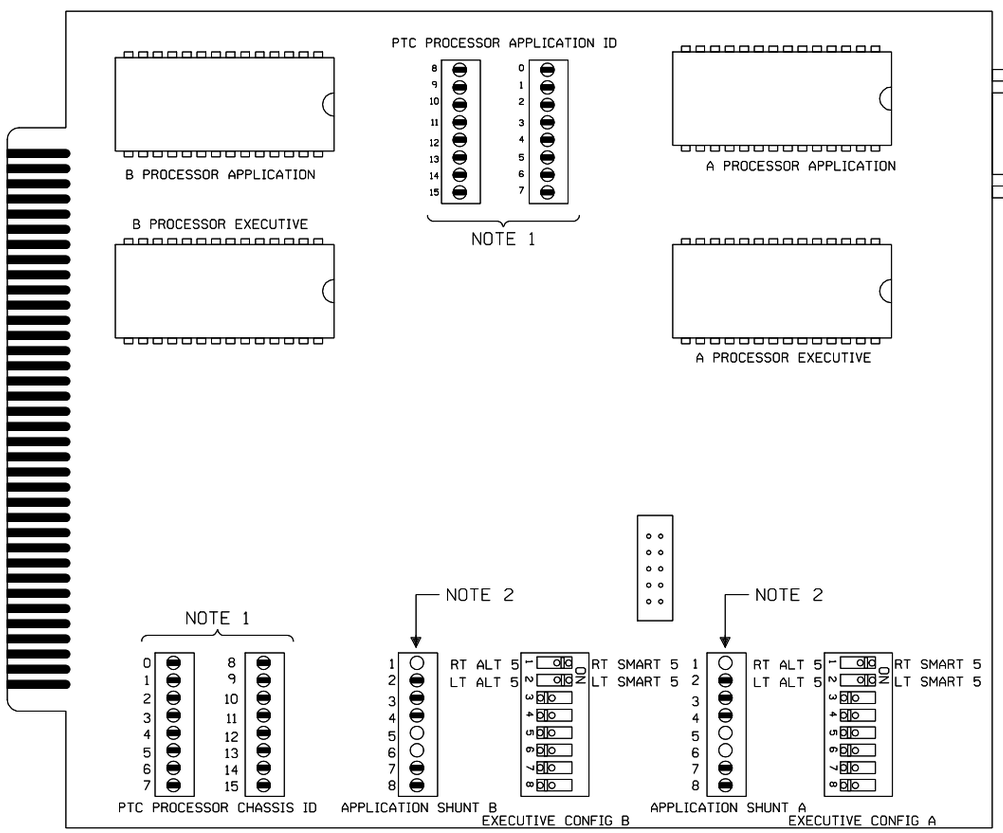

240A / PTCP

(Program EPROM side)

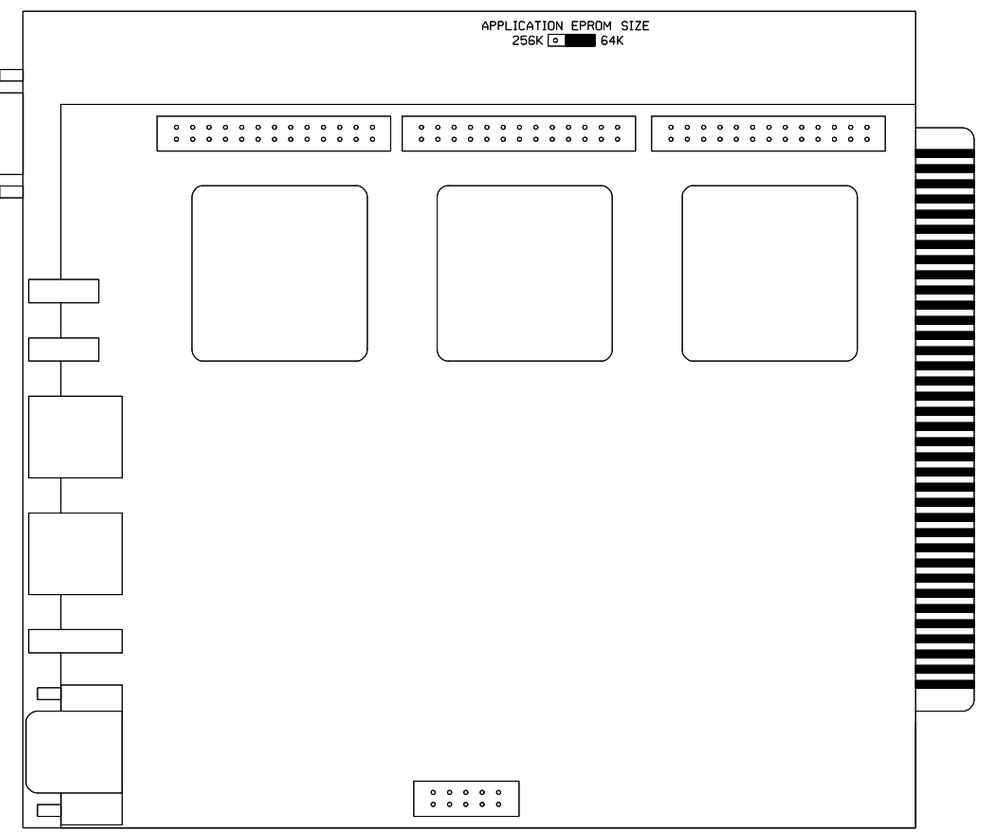

240A / PTCP

(EPROM Size Jumper side)

TRACK TWO SETTINGS **NEW SHEET**

Designed: 12/21/15

INSTALL FLS/GATES & CONSTANT WARNING AT TOUHY AVENUE M.P. 8.81

Rec#: WO#: 32327
IS: /NBT
/ /PRS/JTB

CIRCUIT MODIFICATIONS ARE NOT TO BE MADE WITHOUT AUTHORITY FROM THE OFFICE OF SIGNAL DESIGN

Date:	12/21/15
Des:	PRS
Chk:	NBT
AFE:	32327

UNION PACIFIC RAILROAD

TWO TRACK INTERMEDIATE
MILWAUKEE SUBDIVISION

Office of AVP Engineering - Signal — Omaha, Nebraska

Sh.: 9A

MP: 8.81

ID: NEW0881.9AS

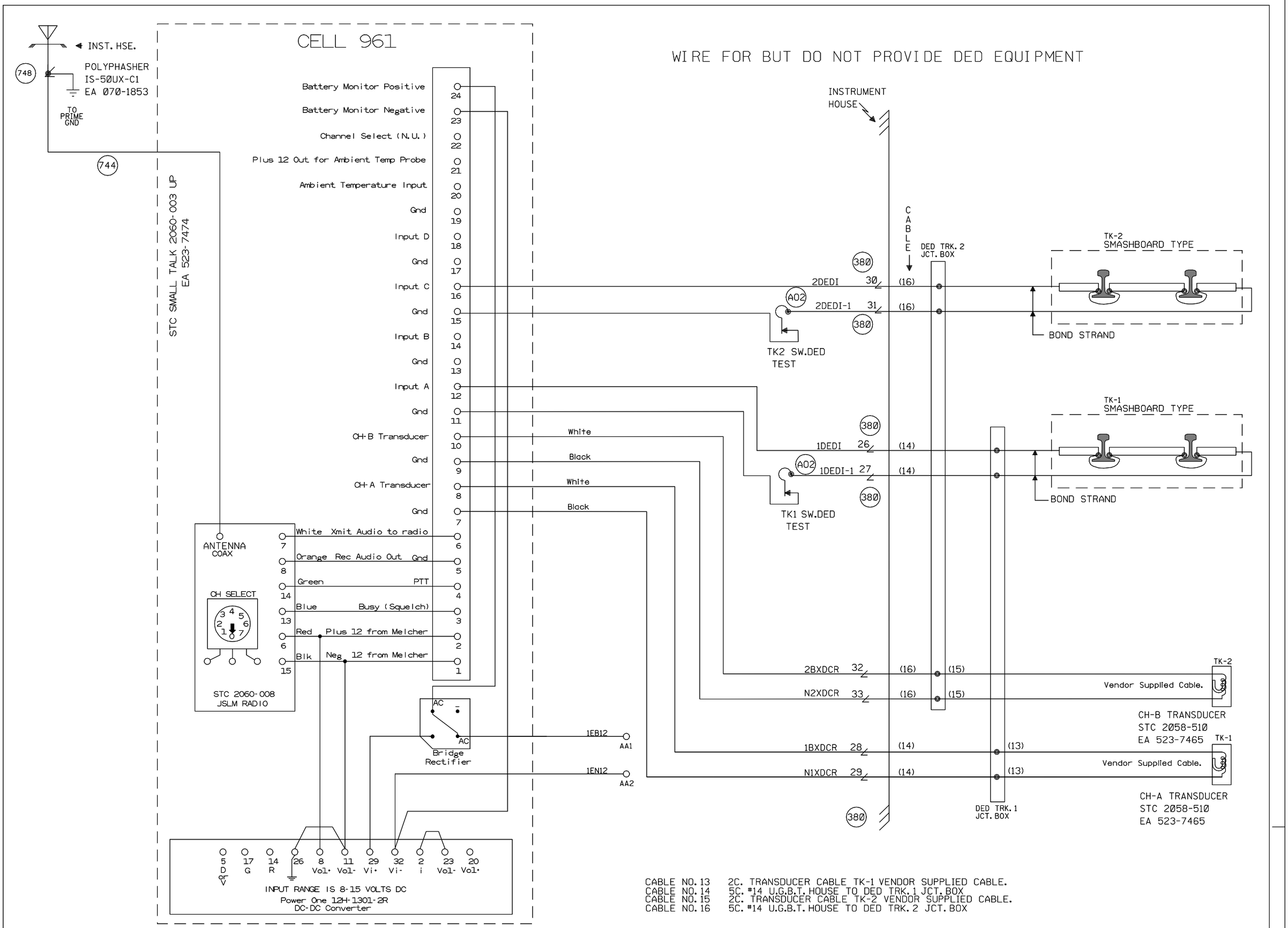

CABLE NO. 13 2C. TRANSDUCER CABLE TK-1 VENDOR SUPPLIED CABLE.
CABLE NO. 14 5C. #14 U.G.B.T. HOUSE TO DED TRK. 1 JCT. BOX
CABLE NO. 15 2C. TRANSDUCER CABLE TK-2 VENDOR SUPPLIED CABLE.
CABLE NO. 16 5C. #14 U.G.B.T. HOUSE TO DED TRK. 2 JCT. BOX

NEW SHEET

Designed: 12/21/15
INSTALL FLS/GATES & CONSTANT WARNING AT TOUHY AVENUE M.P. 8.81
Rec*: WO*: 32327
IS: /NBT
/PRS/JTB

MODIFICATION LEVEL	
Q.A. LAST LEVEL CHECKED	DU
LAST LEVEL MOD THIS TYPICAL	DU
LAST LEVEL BY DESIGNER	DU
CHANGED FROM TYPICAL?	Y

REV 01/28/14 2TMLHBINTC.8PD

CIRCUIT MODIFICATIONS ARE NOT TO BE MADE WITHOUT AUTHORITY FROM THE OFFICE OF SIGNAL DESIGN

Date: 12/21/15
Des: PRS
Chk: NBT
AFE: 32327

UNION PACIFIC RAILROAD

TWO TRACK INTERMEDIATE
MILWAUKEE SUBDIVISION

Office of AVP Engineering - Signal Omaha, Nebraska

Sh.: 10
MP: 8.81
ID: NEW0881.10S

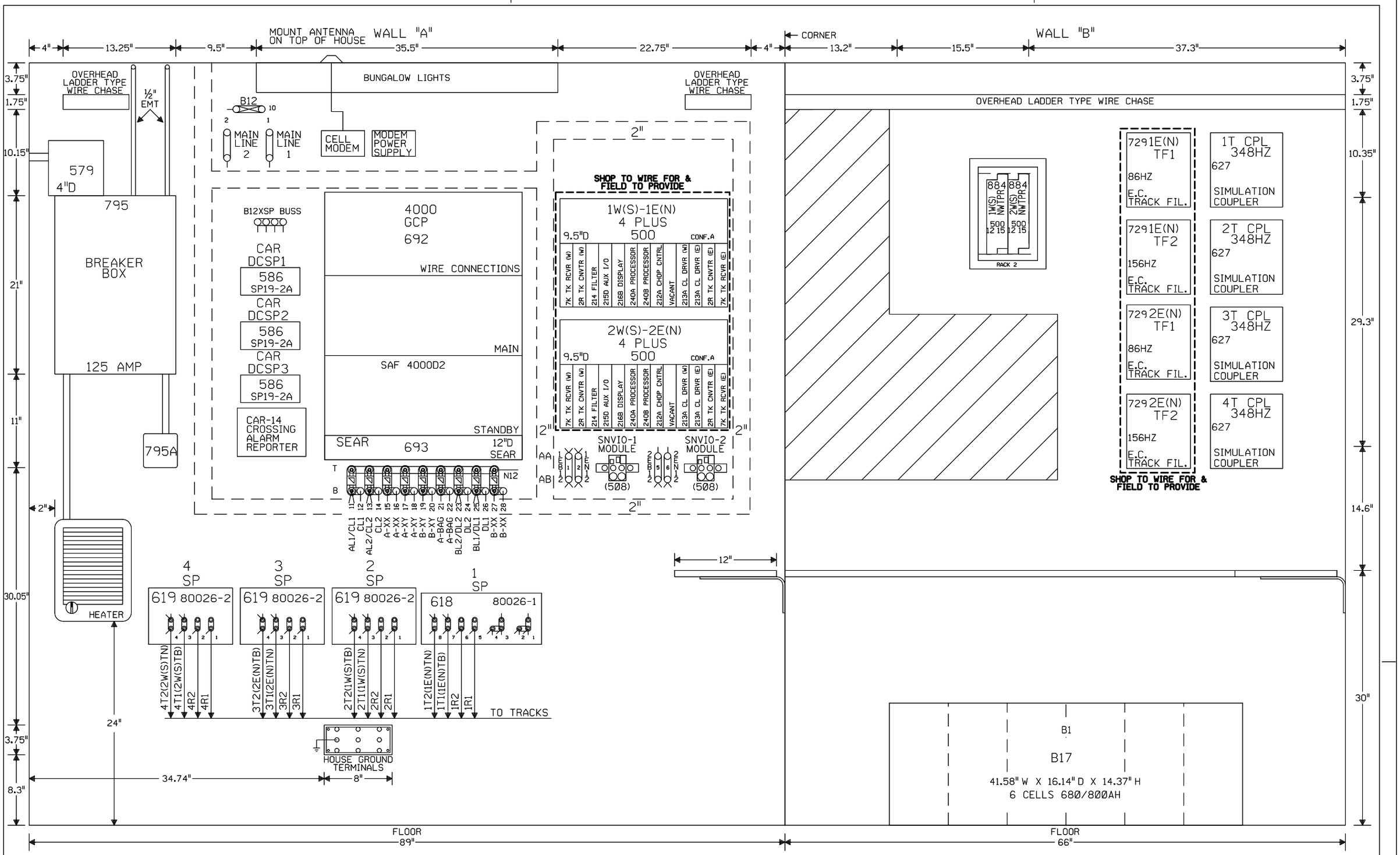

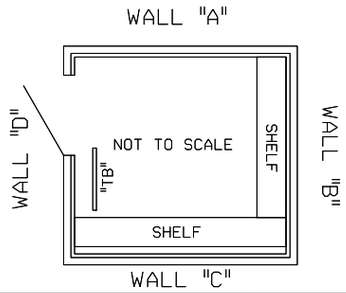

6X8 WAYSIDE/XING HOUSE WITH BLOWER U.P. PART#520-2531

NOTE: ALL DIMENSIONS SHOWN ARE APPROXIMATE.

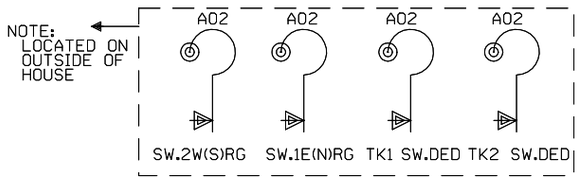

NEW SHEET

Designed: 12/21/15

INSTALL FLS/GATES & CONSTANT WARNING AT TOUHY AVENUE M.P. 8.81

Rec#: WO#: 32327

IS: /NBT / /PRS/JTB

MODIFICATION LEVEL	
Q. A. LAST LEVEL CHECKED	DU
LAST LEVEL MOD THIS TYPICAL	DU
LAST LEVEL BY DESIGNER	DU
CHANGED FROM TYPICAL?	Y

REV 10.15.15 4K INT6X8AB.8

CIRCUIT MODIFICATIONS ARE NOT TO BE MADE WITHOUT AUTHORITY FROM THE OFFICE OF SIGNAL DESIGN

Date: 12/21/15
Des: PRS
Chk: NBT
AFE: 32327

UNION PACIFIC RAILROAD

DES PLAINES, ILLINOIS
TOUHY AVENUE
MILWAUKEE SUBDIVISION

Office of AVP Engineering - Signal Omaha, Nebraska

Sh.: 11
DOT 174087Y
MP: 8.81
ID: NEW0881.11X

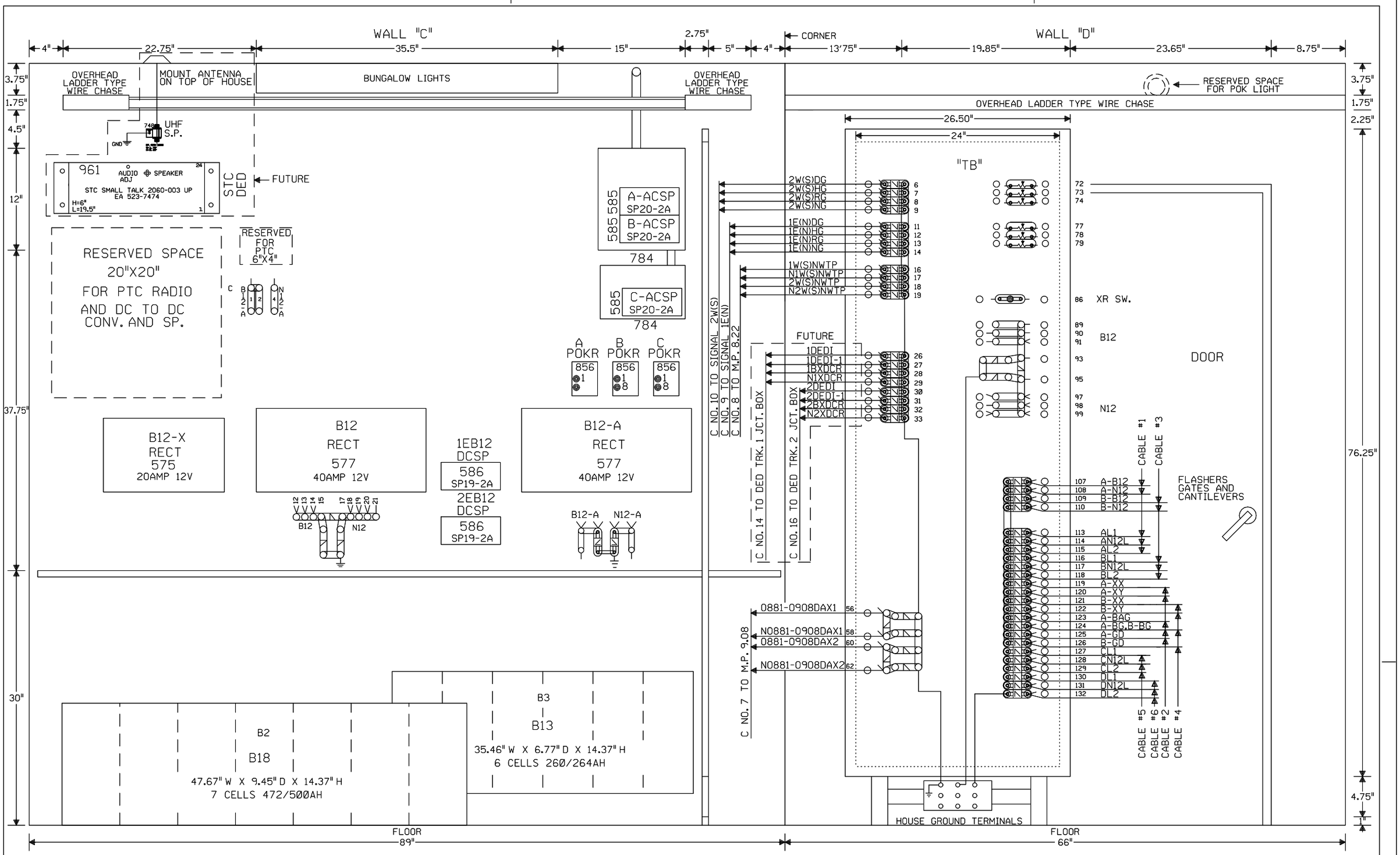

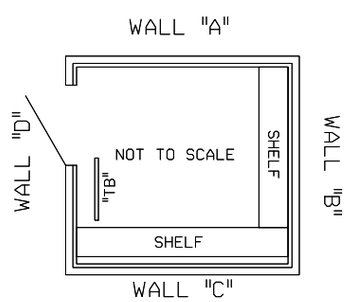

NOTE: ALL DIMENSIONS SHOWN ARE APPROXIMATE.

NEW SHEET

Designed: 12/21/15

INSTALL FLS/GATES & CONSTANT WARNING AT TOUHY AVENUE M.P. 8.81

Rec#: WO#: 32327 /NBT

IS: / /PRS/JTB

MODIFICATION LEVEL	
Q. A. LAST LEVEL CHECKED	DU
LAST LEVEL MOD THIS TYPICAL	DU
LAST LEVEL BY DESIGNER	DU
CHANGED FROM TYPICAL?	Y

REV 10.15.15 4K INT6X8CD.9

CIRCUIT MODIFICATIONS ARE NOT TO BE MADE WITHOUT AUTHORITY FROM THE OFFICE OF SIGNAL DESIGN

Date: 12/21/15
Des: PRS
Chk: NBT
AFE: 32327

UNION PACIFIC RAILROAD

DES PLAINES, ILLINOIS
TOUHY AVENUE
MILWAUKEE SUBDIVISION

Office of AVP Engineering - Signal Omaha, Nebraska

Sh.: 12
DOT 174087Y
MP: 8.81
ID: NEW0881.12X