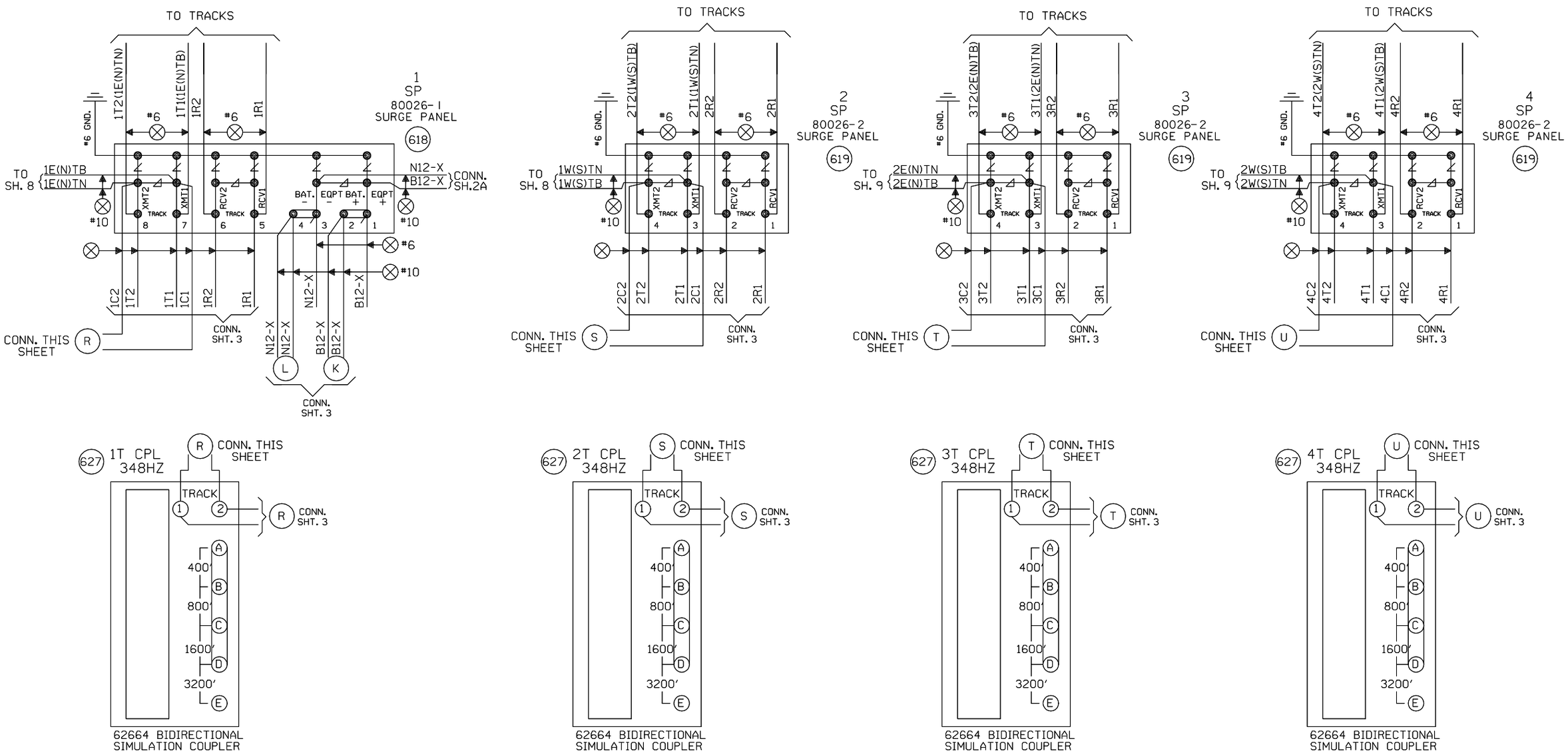

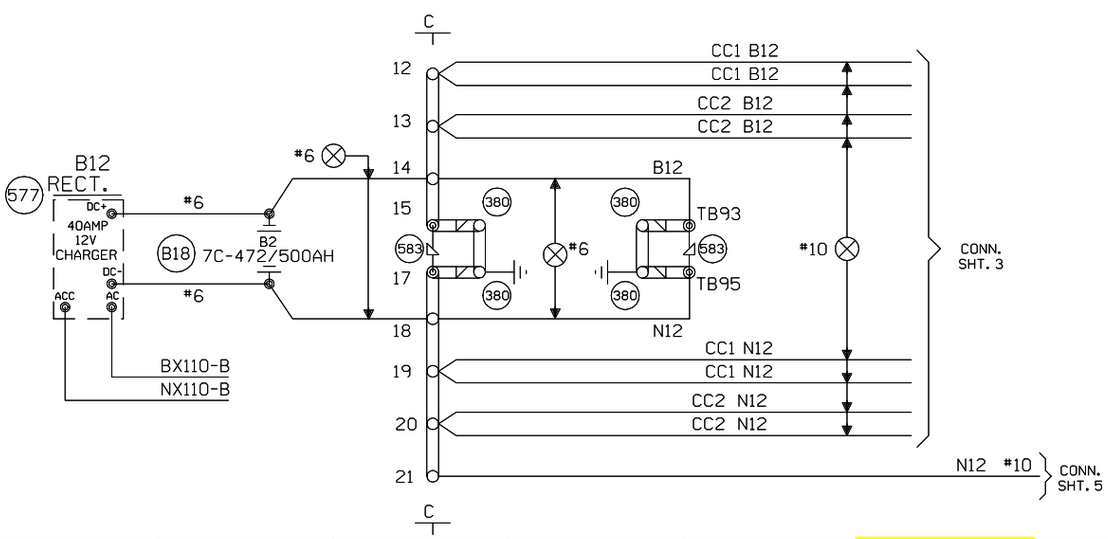

NEW SHEET

Designed: 12/21/15 INSTALL FLS/GATES & CONSTANT WARNING AT TOUHY AVENUE M.P. 8.81 Rec#: WO#: 32327 IS: /NBT / /PRS/JTB	MODIFICATION LEVEL		
	Q. A. LAST LEVEL CHECKED	DU	
	LAST LEVEL MOD THIS TYPICAL	DU	
	LAST LEVEL BY DESIGNER	DU	
	CHANGED FROM TYPICAL?	Y	
	REV 01.24.11 4K 4TKSPGFC.4		

CIRCUIT MODIFICATIONS ARE NOT TO BE MADE WITHOUT AUTHORITY FROM THE OFFICE OF SIGNAL DESIGN

Date: 12/21/15
Des: PRS
Chk: NBT
AFE: 32327

UNION PACIFIC RAILROAD
DES PLAINES, ILLINOIS
TOUHY AVENUE
MILWAUKEE SUBDIVISION
Office of AVP Engineering - Signal Omaha, Nebraska

Sh.: 4
DOT 174087Y
MP: 8.81
ID: NEW0881.4X

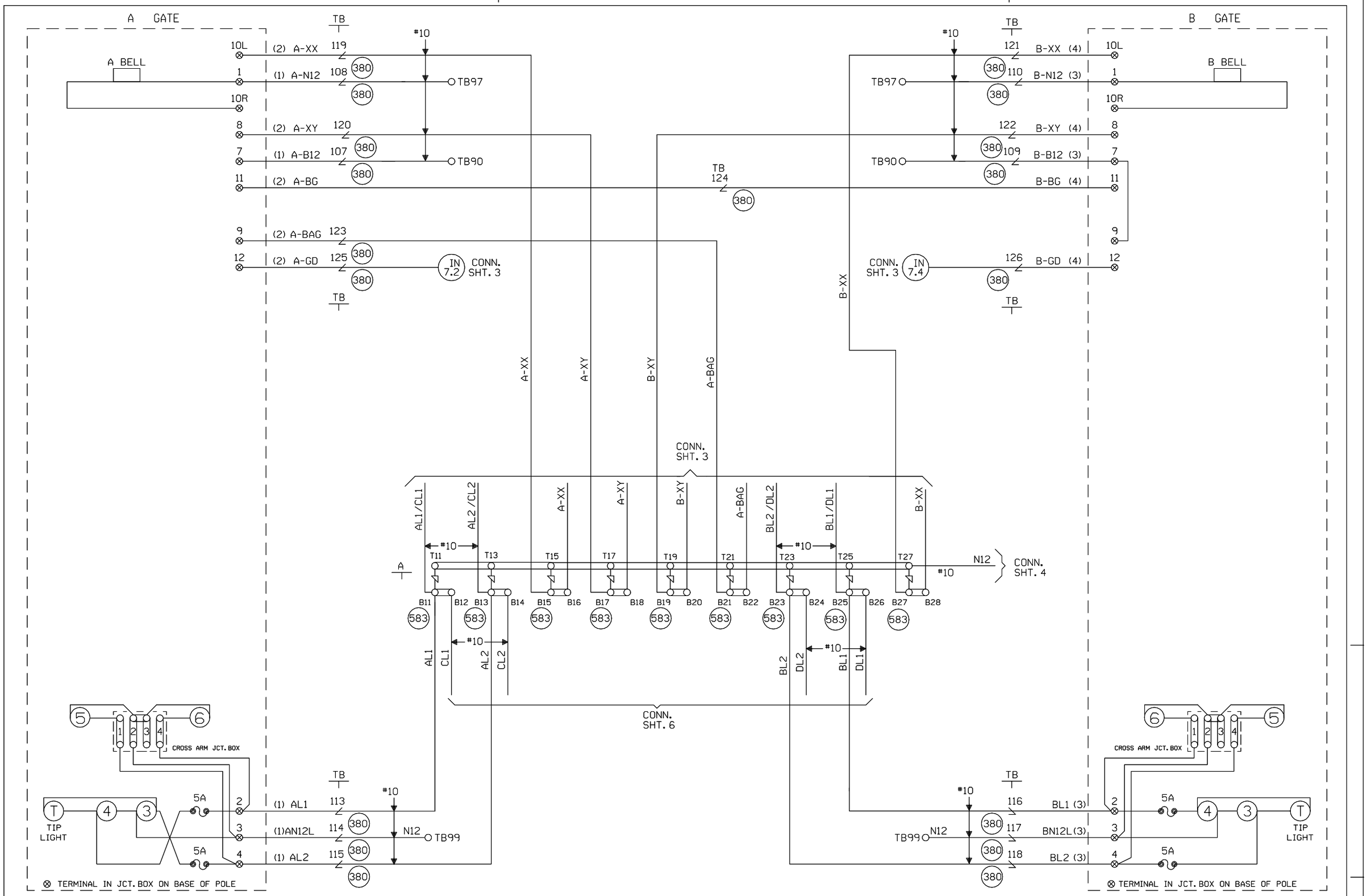

CABLE TABULATION

CABLE NO. 1 5C. NO.6 U.G.B.T. TO GATE A
CABLE NO. 2 7C. NO.14 U.G.B.T. TO GATE A
CABLE NO. 3 5C. NO.6 U.G.B.T. TO GATE B
CABLE NO. 4 7C. NO.14 U.G.B.T. TO GATE B

NEW SHEET

Designed: 12/21/15
INSTALL FLS/GATES & CONSTANT WARNING AT TOUHY AVENUE M.P. 8.81
Rec*: WO*: 32327
IS: NBT / PRS/JTB

MODIFICATION LEVEL	
Q.A. LAST LEVEL CHECKED	DU
LAST LEVEL MOD THIS TYPICAL	DU
LAST LEVEL BY DESIGNER	DU
CHANGED FROM TYPICAL?	Y

REV 01.24.11 4K GFCTYP.5

CIRCUIT MODIFICATIONS ARE NOT TO BE MADE WITHOUT AUTHORITY FROM THE OFFICE OF SIGNAL DESIGN

Date: 12/21/15
Des: PRS
Chk: NBT
AFE: 32327

UNION PACIFIC RAILROAD
DES PLAINES, ILLINOIS
TOUHY AVENUE
MILWAUKEE SUBDIVISION
Office of AVP Engineering - Signal Omaha, Nebraska

Sh.: 5
DOT 174087Y
MP: 8.81
ID: NEW0881.5X

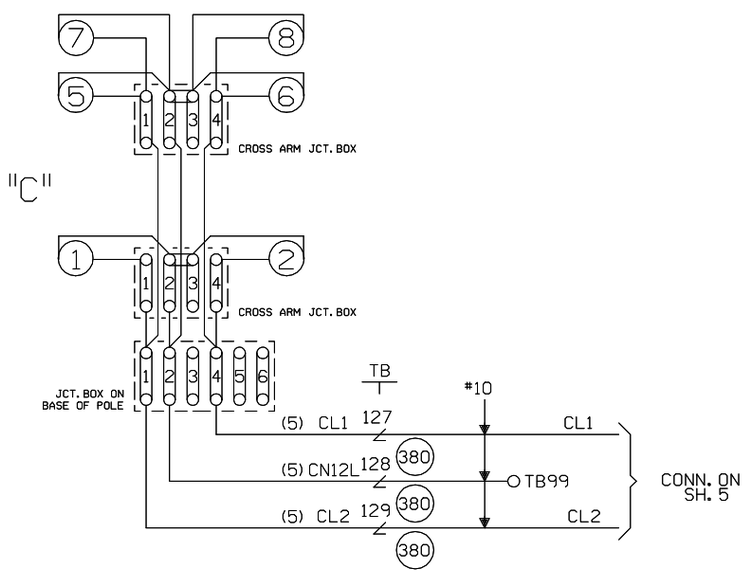

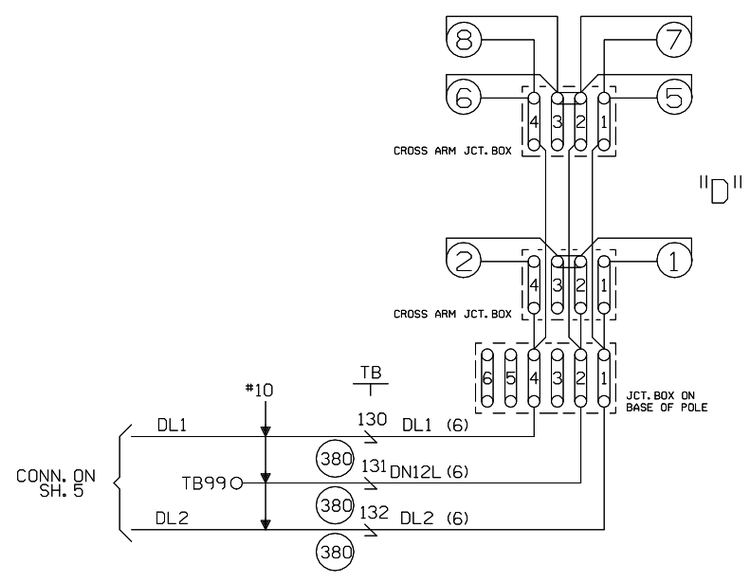

CABLE TABULATION

CABLE NO. 5 5C. NO. 6 U.G.B.T. TO CANT C
CABLE NO. 6 5C. NO. 6 U.G.B.T. TO CANT D

NEW SHEET

Designed: 12/21/15

INSTALL FLS/GATES & CONSTANT WARNING AT TOUHY AVENUE M.P. 8.81

Rec#: WO#: 32327
IS: NBT / / PRS/JTB

MODIFICATION LEVEL	
Q. A. LAST LEVEL CHECKED	DU
LAST LEVEL MOD THIS TYPICAL	DU
LAST LEVEL BY DESIGNER	DU
CHANGED FROM TYPICAL?	Y

REV 01.24.11 4K CGTYP.6

CIRCUIT MODIFICATIONS ARE NOT TO BE MADE WITHOUT AUTHORITY FROM THE OFFICE OF SIGNAL DESIGN

Date: 12/21/15
Des: PRS
Chk: NBT
AFE: 32327

UNION PACIFIC RAILROAD

DES PLAINES, ILLINOIS
TOUHY AVENUE
MILWAUKEE SUBDIVISION

Office of AVP Engineering - Signal Omaha, Nebraska

Sh.: 6
DOT 174087Y
MP: 8.81
ID: NEW0881.6X

WCH 3593-E

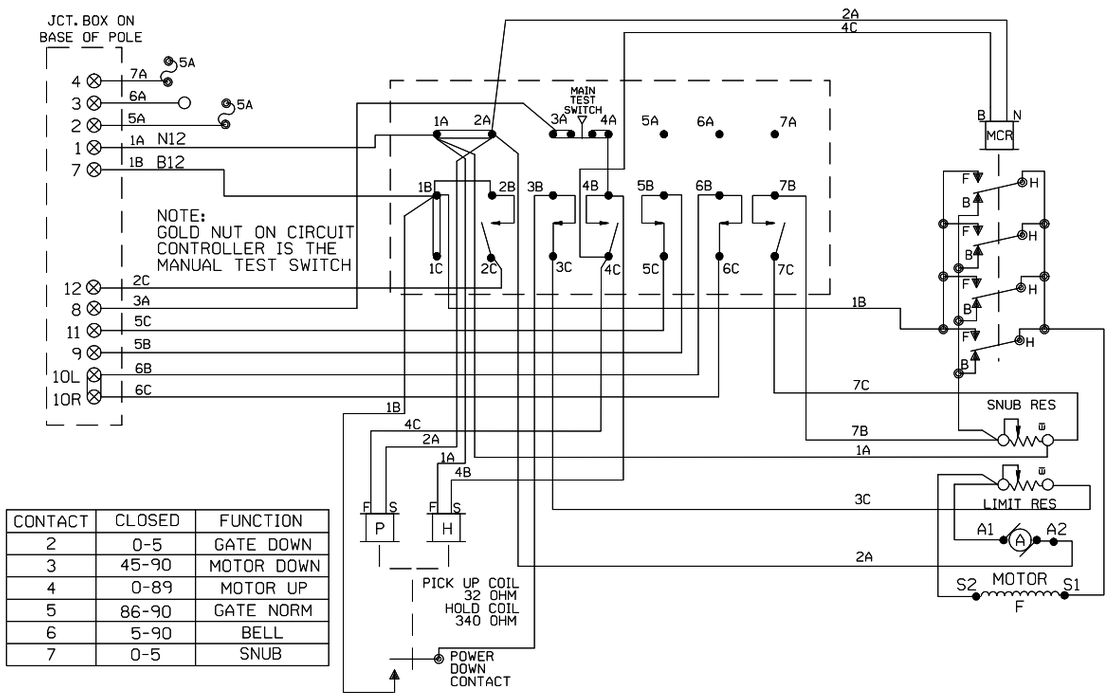

CONTACT	CLOSED	FUNCTION
2	0-5	GATE DOWN
3	45-90	MOTOR DOWN
4	0-89	MOTOR UP
5	86-90	GATE NORM
6	5-90	BELL
7	0-5	SNUB

WCH 3597-E

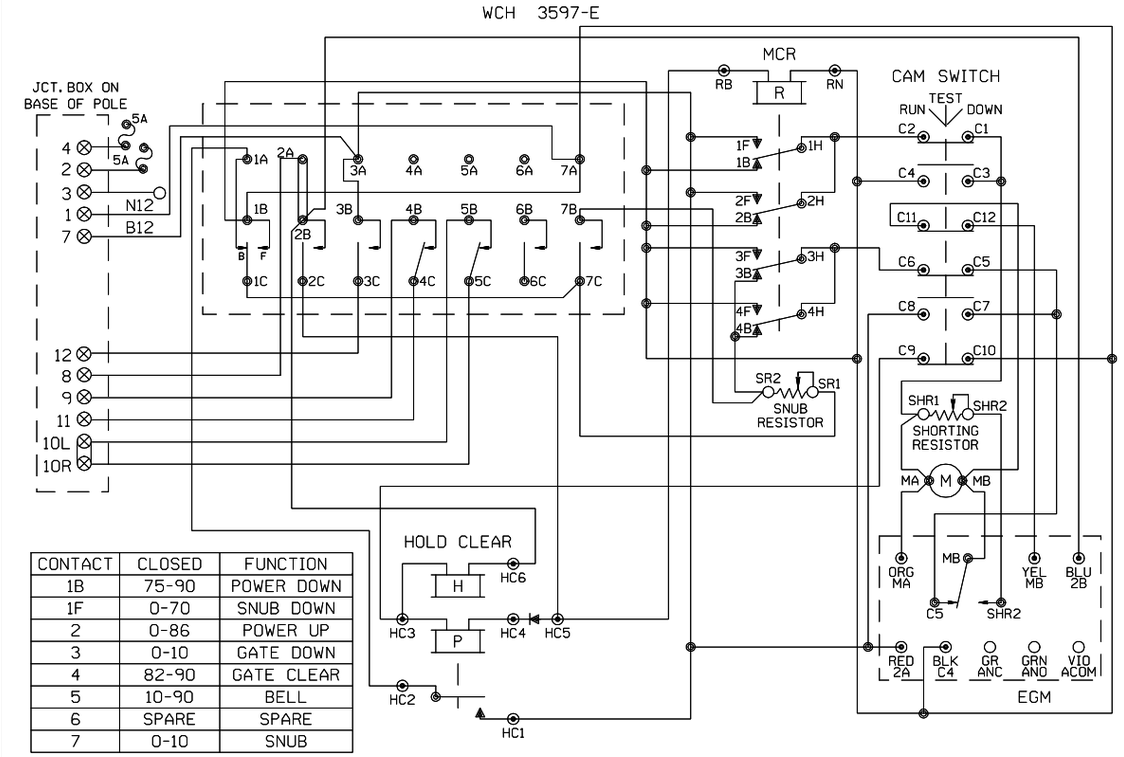

CONTACT	CLOSED	FUNCTION
1B	75-90	POWER DOWN
1F	0-70	SNUB DOWN
2	0-86	POWER UP
3	0-10	GATE DOWN
4	82-90	GATE CLEAR
5	10-90	BELL
6	SPARE	SPARE
7	0-10	SNUB

WCH 3597-RB

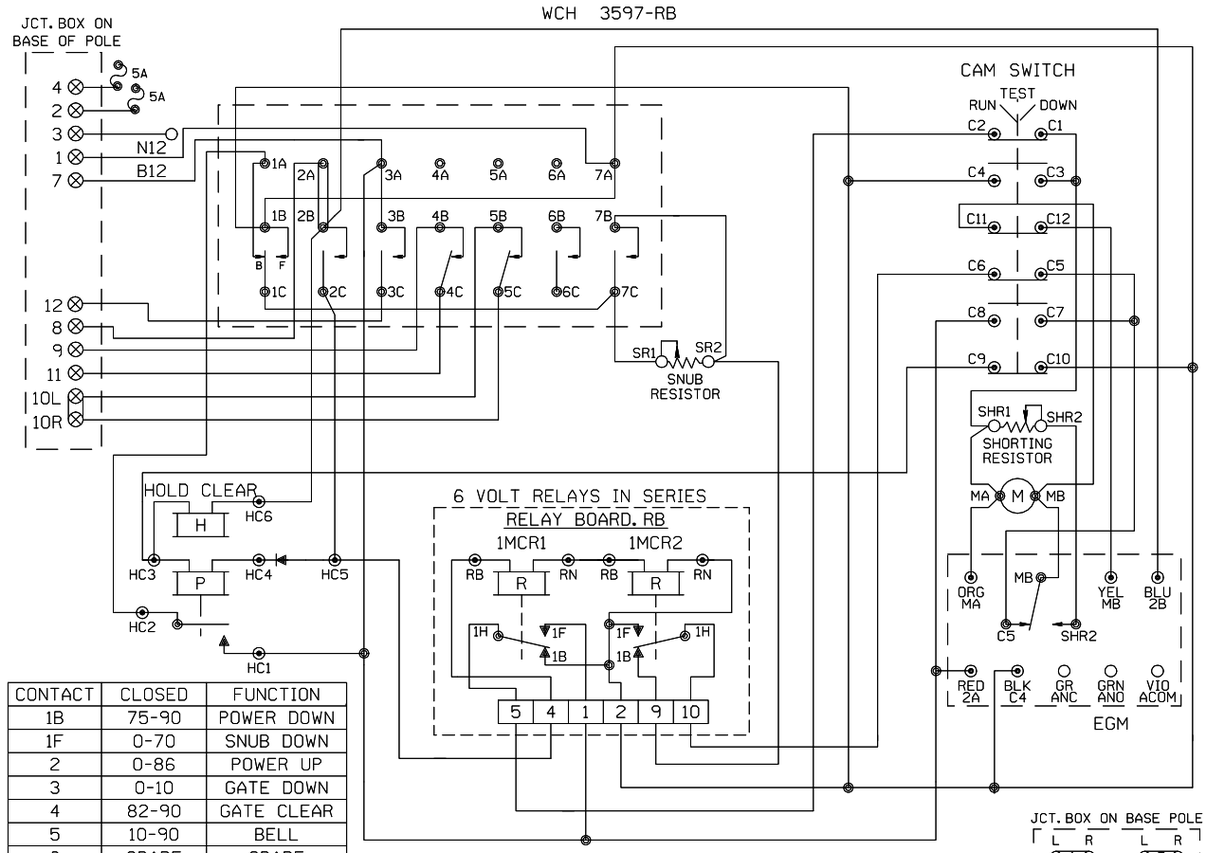

CONTACT	CLOSED	FUNCTION
1B	75-90	POWER DOWN
1F	0-70	SNUB DOWN
2	0-86	POWER UP
3	0-10	GATE DOWN
4	82-90	GATE CLEAR
5	10-90	BELL
6	SPARE	SPARE
7	0-10	SNUB

JCT. BOX ON BASE POLE

SHOW TYPE MECH. INSTALLED

ALL MECHANISMS SHOWN IN THE CLEAR POSITION

SAFETRAN S-60

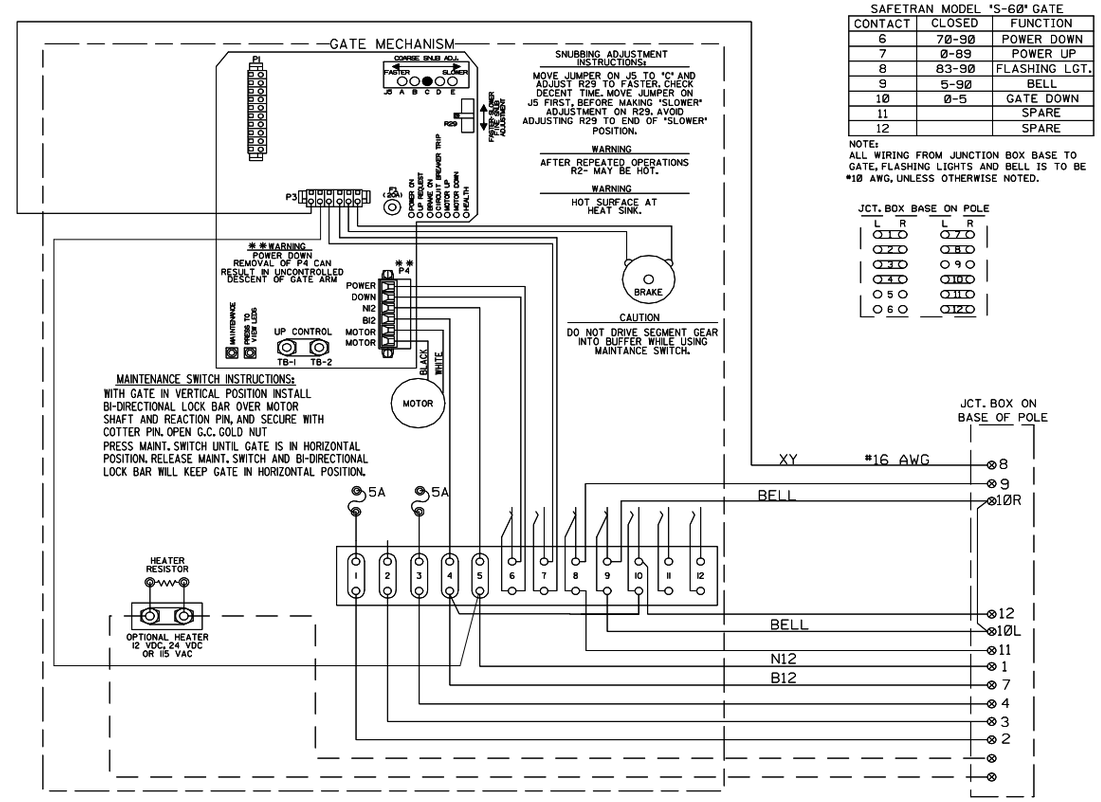

SAFETRAN MODEL 'S-60' GATE

CONTACT	CLOSED	FUNCTION
6	70-90	POWER DOWN
7	0-89	POWER UP
8	83-90	FLASHING LGT.
9	5-90	BELL
10	0-5	GATE DOWN
11		SPARE
12		SPARE

NOTE:
ALL WIRING FROM JUNCTION BOX BASE TO GATE, FLASHING LIGHTS AND BELL IS TO BE #10 AWG, UNLESS OTHERWISE NOTED.

JCT. BOX BASE ON POLE

FOR WIRING GATES "A" & "B"

NEW SHEET

Designed: 12/21/15

INSTALL FLS/GATES & CONSTANT WARNING AT TOUHY AVENUE M.P. 8.81

Rec#: WO#: 32327
IS: /NBT
/PRS/JTB

MODIFICATION LEVEL	
Q. A. LAST LEVEL CHECKED	DU
LAST LEVEL MOD THIS TYPICAL	DU
LAST LEVEL BY DESIGNER	DU
CHANGED FROM TYPICAL?	N

REV 01.24.11 4K GWIRING.7

CIRCUIT MODIFICATIONS ARE NOT TO BE MADE WITHOUT AUTHORITY FROM THE OFFICE OF SIGNAL DESIGN

Date: 12/21/15
Des: PRS
Chk: NBT
AFE: 32327

UNION PACIFIC RAILROAD
DES PLAINES, ILLINOIS
TOUHY AVENUE
MILWAUKEE SUBDIVISION
Office of AVP Engineering - Signal Omaha, Nebraska

Sh.: 7
DOT 174087Y
MP: 8.81
ID: NEW0881.7X

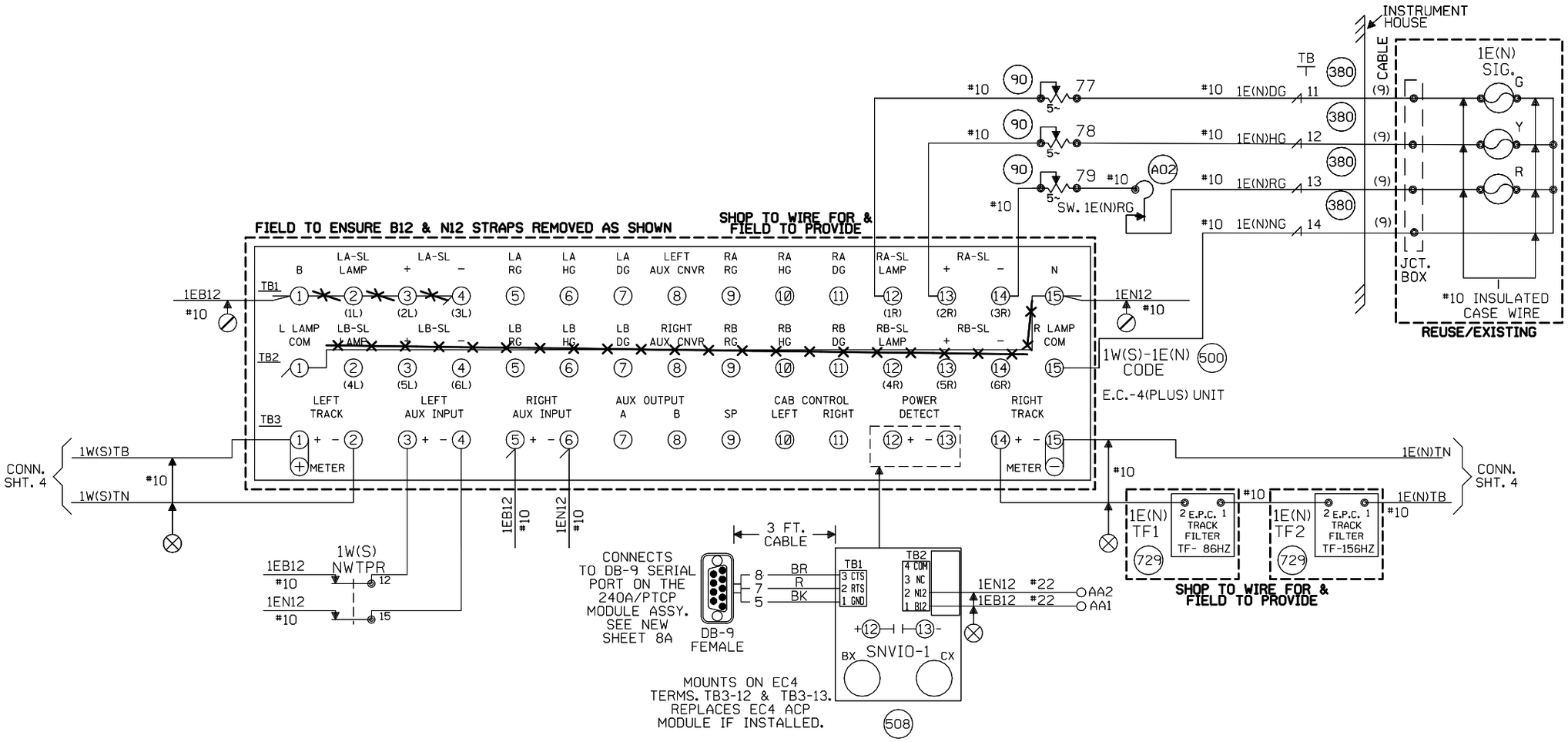

NOTES:

⊘ = OBSERVE CORRECT POLARITY EQUIPMENT WILL BE DAMAGED IF CONNECTIONS ARE REVERSED.

⧖ = TEST TERMINALS MUST BE INSTALLED ON ALL WIRING CONNECTED TO EXTERNAL CABLES (EXCEPT TRACK AND A.C. POWER WIRES).

CABLE TABULATION

CABLE NO. 9 5C.NO.6 HSE. TO SIGNAL 1E(N)
CABLE NO. 10 5C.NO.6 HSE. TO SIGNAL 2W(S)

NEW SHEET

Designed: 12/21/15

INSTALL FLS/GATES & CONSTANT WARNING AT TOUHY AVENUE M.P. 8.81

Rec#: WO#: 32327
IS: NBT / PRS/JTB

MODIFICATION LEVEL	
Q.A. LAST LEVEL CHECKED	DD
LAST LEVEL MOD THIS TYPICAL	DD
LAST LEVEL BY DESIGNER	DU
CHANGED FROM TYPICAL?	Y

REV 01.02.09 2TE4INTC.1

CIRCUIT MODIFICATIONS ARE NOT TO BE MADE WITHOUT AUTHORITY FROM THE OFFICE OF SIGNAL DESIGN

Date: 12/21/15
Des: PRS
Chk: NBT
AFE: 32327

UNION PACIFIC RAILROAD

TWO TRACK INTERMEDIATE
MILWAUKEE SUBDIVISION

Office of AVP Engineering - Signal Omaha, Nebraska

Sh.: 8
MP: 8.81
ID: NEW0881.8S

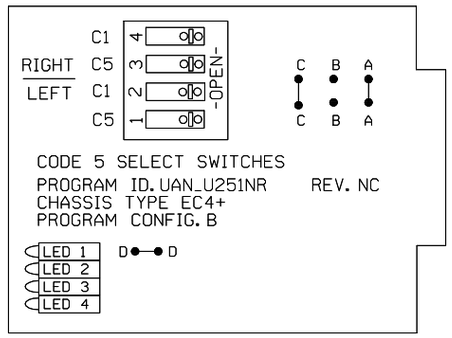

215D MODULE

215D "A" CONFIGURATION = "B" JUMPERED, "A","C" & "D" OPEN
215D "B" CONFIGURATION = "B" OPEN, "A","C" & "D" JUMPERED

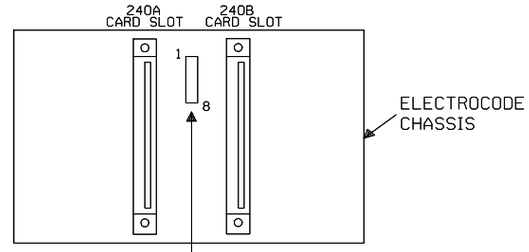

ASSIGNED CHASSIS I.D.
STRAPPING

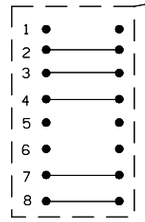

SHUNT LOCATED ON BACK OF CHASSIS
BETWEEN 240A & 240B CARD SLOT

NOTES:

1. The PTC Processor Application ID and PTC Processor Chassis ID shunts are not used. (Leave shunts intact.)
   - Shunt intact
   - Shunt open (punched out)
   - Switch On
   - Switch Off
2. The Application Shunts A and B need to match the old 230 cards Application ID when applicable.

DB-9 MALE
SERIAL PORT
USED FOR SNVIO
MODULE CONNECTION

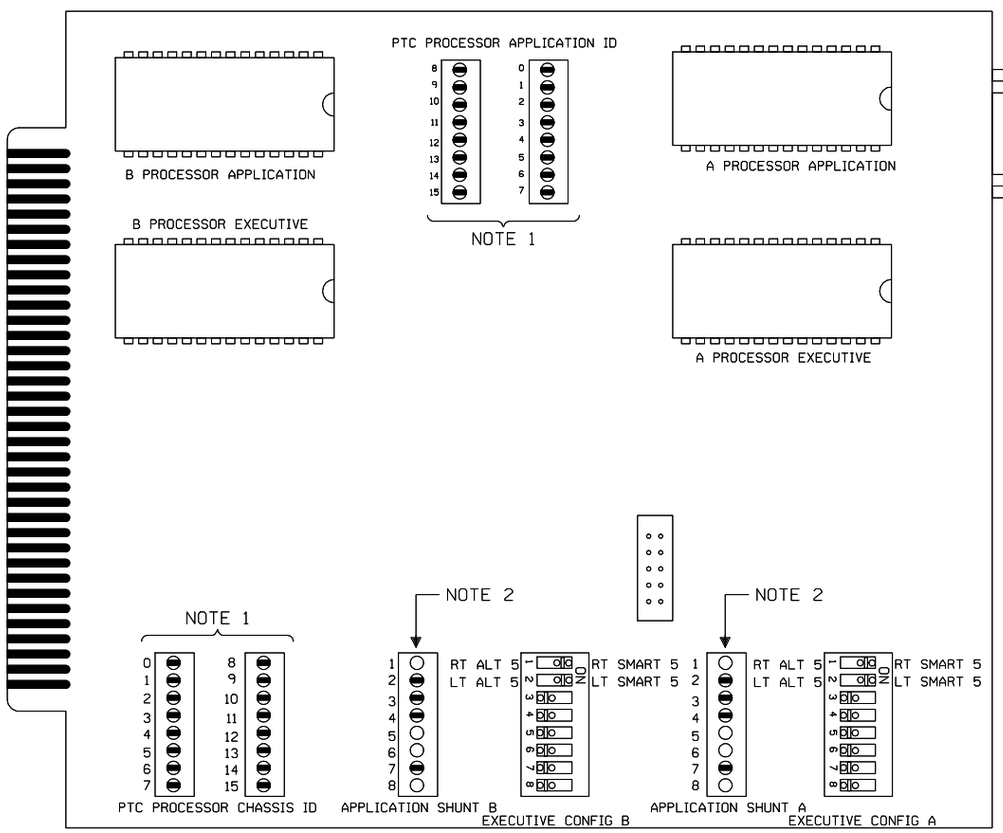

240A / PTCP

(Program EPROM side)

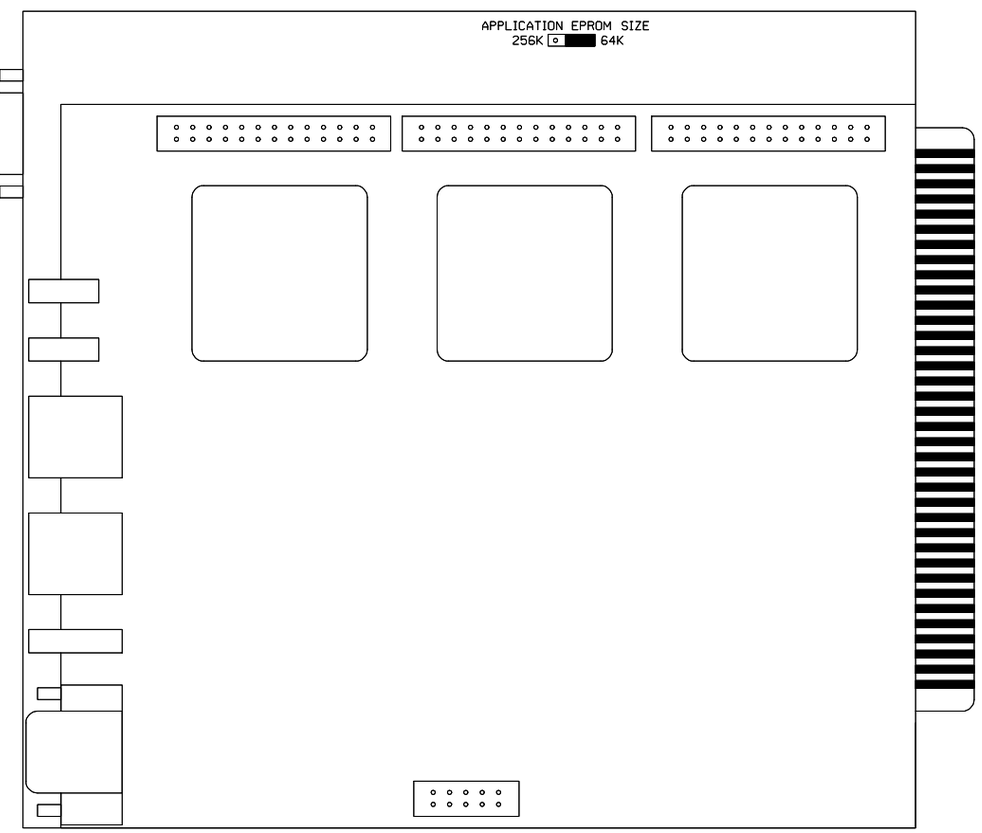

240A / PTCP

(EPROM Size Jumper side)

TRACK ONE SETTINGS

NEW SHEET

Designed: 12/21/15

INSTALL FLS/GATES & CONSTANT WARNING AT TOUHY AVENUE M.P. 8.81

Rec#: WO#: 32327
IS: /NBT
/ /PRS/JTB

CIRCUIT MODIFICATIONS ARE NOT TO BE MADE WITHOUT AUTHORITY FROM THE OFFICE OF SIGNAL DESIGN

Date:	12/21/15
Des:	PRS
Chk:	NBT
AFE:	32327

UNION PACIFIC RAILROAD

TWO TRACK INTERMEDIATE
MILWAUKEE SUBDIVISION

Office of AVP Engineering - Signal — Omaha, Nebraska

Sh.:	8A
MP:	8.81
ID:	NEW0881.8AS