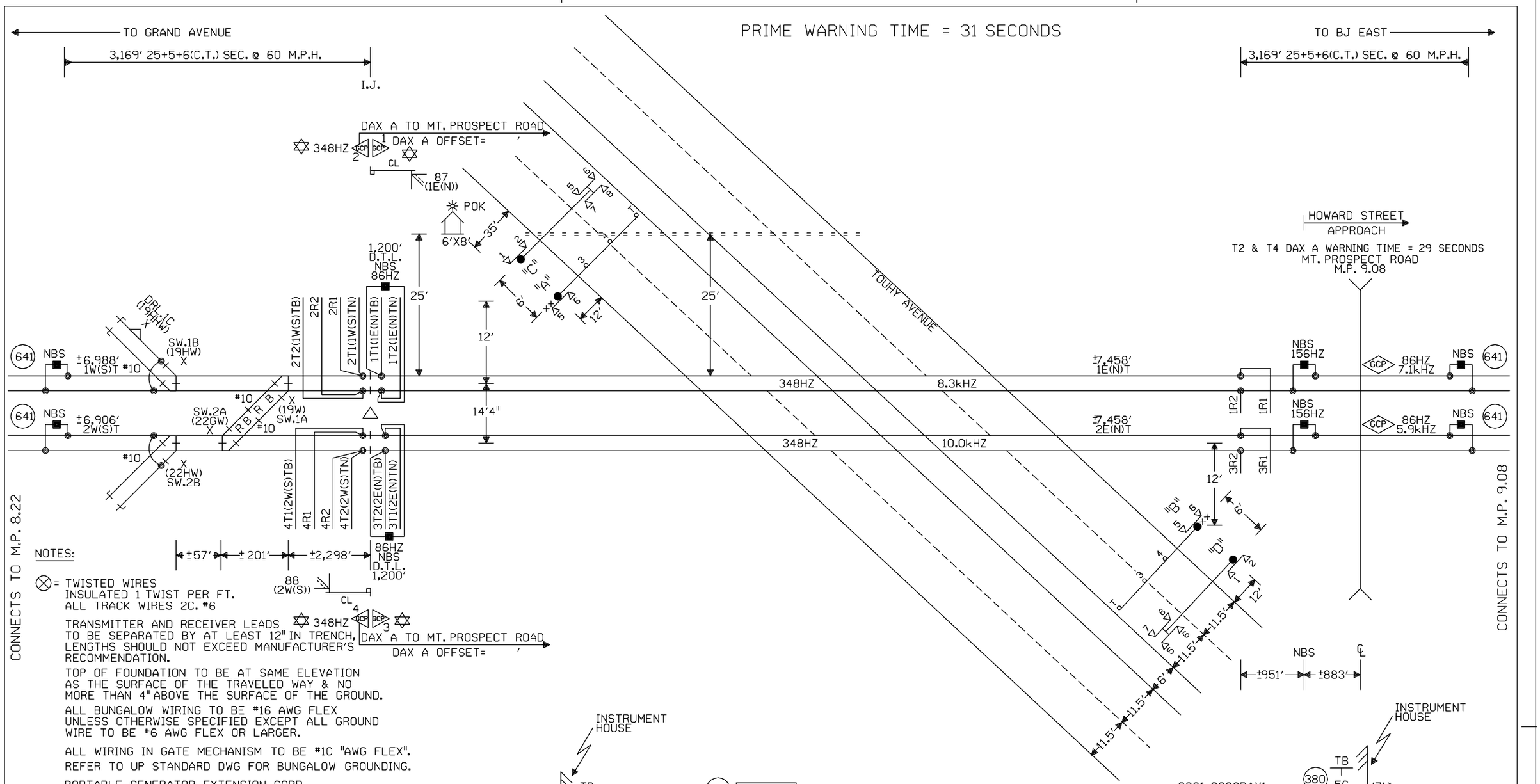

NOTES:

⊗ = TWISTED WIRES INSULATED 1 TWIST PER FT. ALL TRACK WIRES 2C. #6

TRANSMITTER AND RECEIVER LEADS TO BE SEPARATED BY AT LEAST 12" IN TRENCH, LENGTHS SHOULD NOT EXCEED MANUFACTURER'S RECOMMENDATION.

TOP OF FOUNDATION TO BE AT SAME ELEVATION AS THE SURFACE OF THE TRAVELED WAY & NO MORE THAN 4" ABOVE THE SURFACE OF THE GROUND.

ALL BUNGALOW WIRING TO BE #16 AWG FLEX UNLESS OTHERWISE SPECIFIED EXCEPT ALL GROUND WIRE TO BE #6 AWG FLEX OR LARGER.

ALL WIRING IN GATE MECHANISM TO BE #10 "AWG FLEX".

REFER TO UP STANDARD DWG FOR BUNGALOW GROUNDING.

PORTABLE GENERATOR EXTENSION CORD FOR 240V TO 240V IS PROVIDED AS WELL AS A 120V TO 240V ADAPTER.

ALL LIGHTS TO BE 12" ROUNDELS.

= = = = = = 4" X 120' CONDUIT

LIGHTS: LED LIGHTS

GATE "A": 35'
GATE "B": 35'
CANT "C": 30'
CANT "D": 30'

xx = BELL

✡ = GCP TO OPERATE IN SEMI-BI DIRECTIONAL MODE. USE TAB 627 COUPLER.

△ = ENSURE TRACK POLARITY IS TRANSPOSED ACROSS ALL INSULATED JOINTS.

TRK 1 ISLAND DISTANCE 198' MINIMUM 120' REQUIRED

TRK 2 ISLAND DISTANCE 198' MINIMUM 120' REQUIRED

PREFERRED ISLAND WIRE CONNECTIONS ARE A MINIMUM 50' FROM EDGE OF ROAD

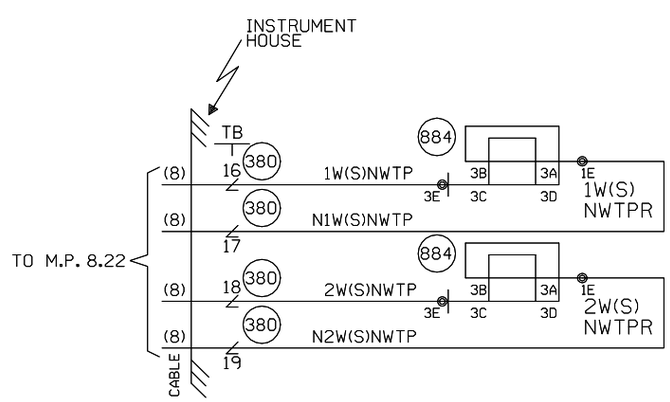

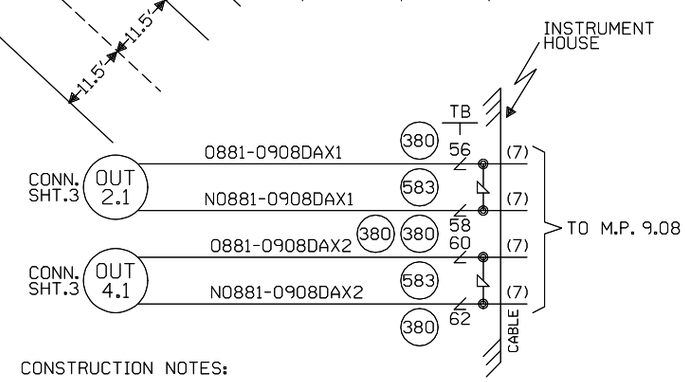

CONSTRUCTION NOTES:

1. REMOVE EXISTING INSULATED JOINTS IN NORTH APPROACH
2. ALLOCATE ADDITIONAL LABOR FOR PHASING OF CROSSING PROJECT
3. FIELD TO REUSE EXISTING INTERMEDIATE SIGNALS AT M.P. 8.75.
4. SHOP TO WIRE FOR & FIELD TO PROVIDE (2) EC4 UNITS (TAB 500) & 4 TRACK FILTERS (TAB 729) FROM EXISTING M.P. 8.75
5. FINAL CABIN PLACEMENT TO BE VERIFIED BY THE ICC.
6. INSTALL IN CONJUNCTION WITH NEW SOFTWARE AT BRYN MAWR (M.P. 7.40) & NORMA (M.P. 10.90)

OFFSET AND ISLAND DISTANCES TO BE VERIFIED BY FIELD

W(S) ◄——○——► E(N)

CABLE TABULATION

CABLE NO. 7 7C.NO.14 U.G.B.T. HOUSE TO MP. 9.08
CABLE NO. 8 7C.NO.14 U.G.B.T. HOUSE TO MP. 8.22

NEW SHEET

Designed: 12/21/15 INSTALL FLS/GATES & CONSTANT WARNING AT TOUHY AVENUE M.P. 8.81 Rec#: WO#: 32327 IS: /NBT /PRS/JTB	MODIFICATION LEVEL		CIRCUIT MODIFICATIONS ARE NOT TO BE MADE WITHOUT AUTHORITY FROM THE OFFICE OF SIGNAL DESIGN	Date: 12/21/15	UNION PACIFIC RAILROAD
	Q.A. LAST LEVEL CHECKED	DU		Des: PRS	DES PLAINES, ILLINOIS
	LAST LEVEL MOD THIS TYPICAL	DU		Chk: NBT	TOUHY AVENUE
	LAST LEVEL BY DESIGNER	DU		AFE: 32327	MILWAUKEE SUBDIVISION
	CHANGED FROM TYPICAL?	Y			Office of AVP Engineering - Signal, Omaha, Nebraska
	REV 01.24.11 4K 2TUCGTYP.1				

Sh.: 1
DOT 174087Y
MP: 8.81
ID: NEW0881.1X

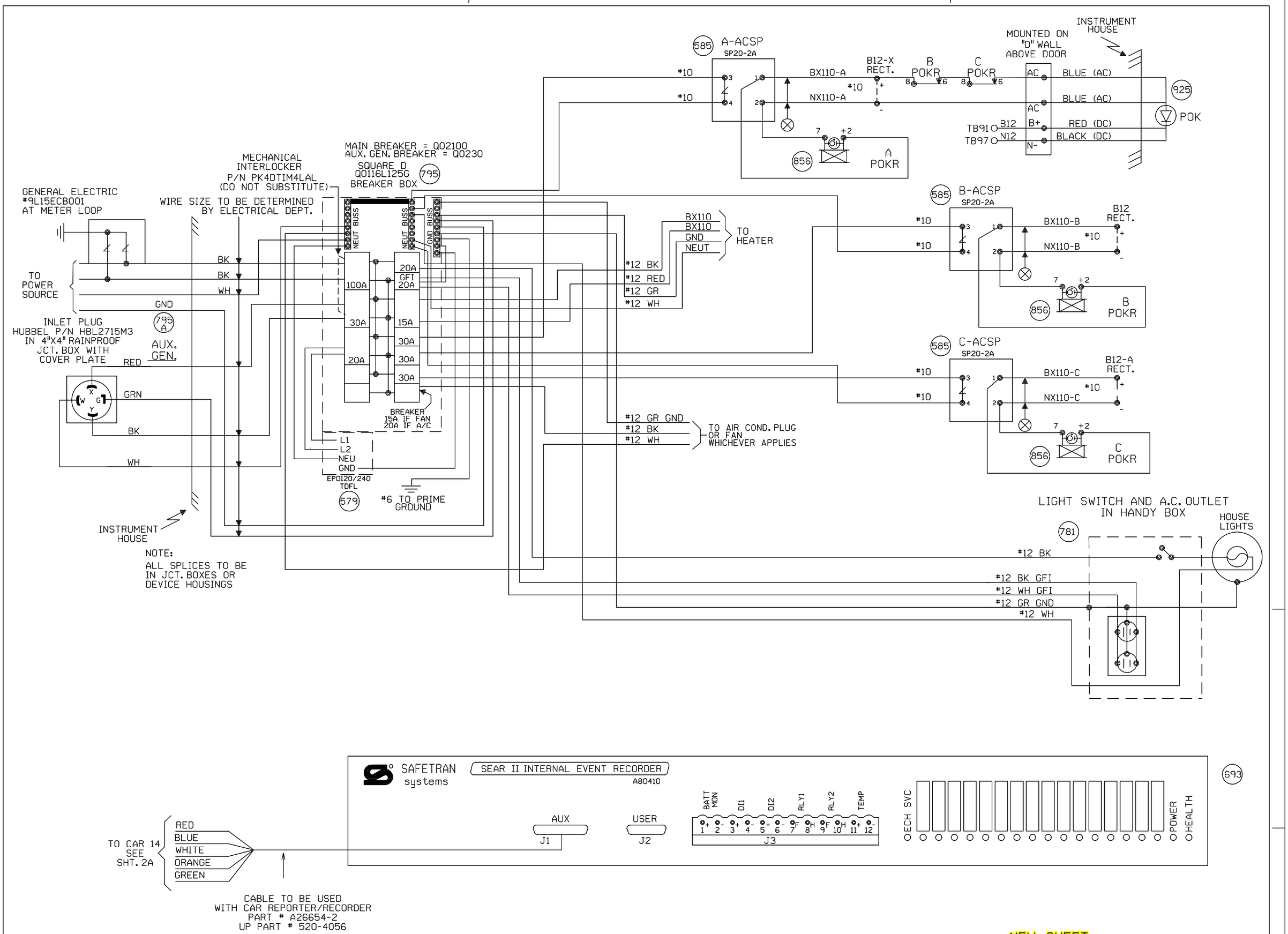

NEW SHEET

Designed: 12/21/15 INSTALL FLS/GATES & CONSTANT WARNING AT TOUHY AVENUE M.P. 8.81 Rec#: WO#: 32327 IS: NBT / PRS/JTB	MODIFICATION LEVEL		CIRCUIT MODIFICATIONS ARE NOT TO BE MADE WITHOUT AUTHORITY FROM THE OFFICE OF SIGNAL DESIGN	Date: 12/21/15 Des: PRS Chk: NBT AFE: 32327	UNION PACIFIC RAILROAD DES PLAINES, ILLINOIS TOUHY AVENUE MILWAUKEE SUBDIVISION Office of AVP Engineering - Signal Omaha, Nebraska
	Q.A. LAST LEVEL CHECKED	DU			
	LAST LEVEL MOD THIS TYPICAL	DU			
	LAST LEVEL BY DESIGNER	DU			
	CHANGED FROM TYPICAL?	Y			
	REV 01.24.11 4K SEARAC.2				

Sh.: 2
DOT 174087Y
MP: 8.81
ID: NEW0881.2X

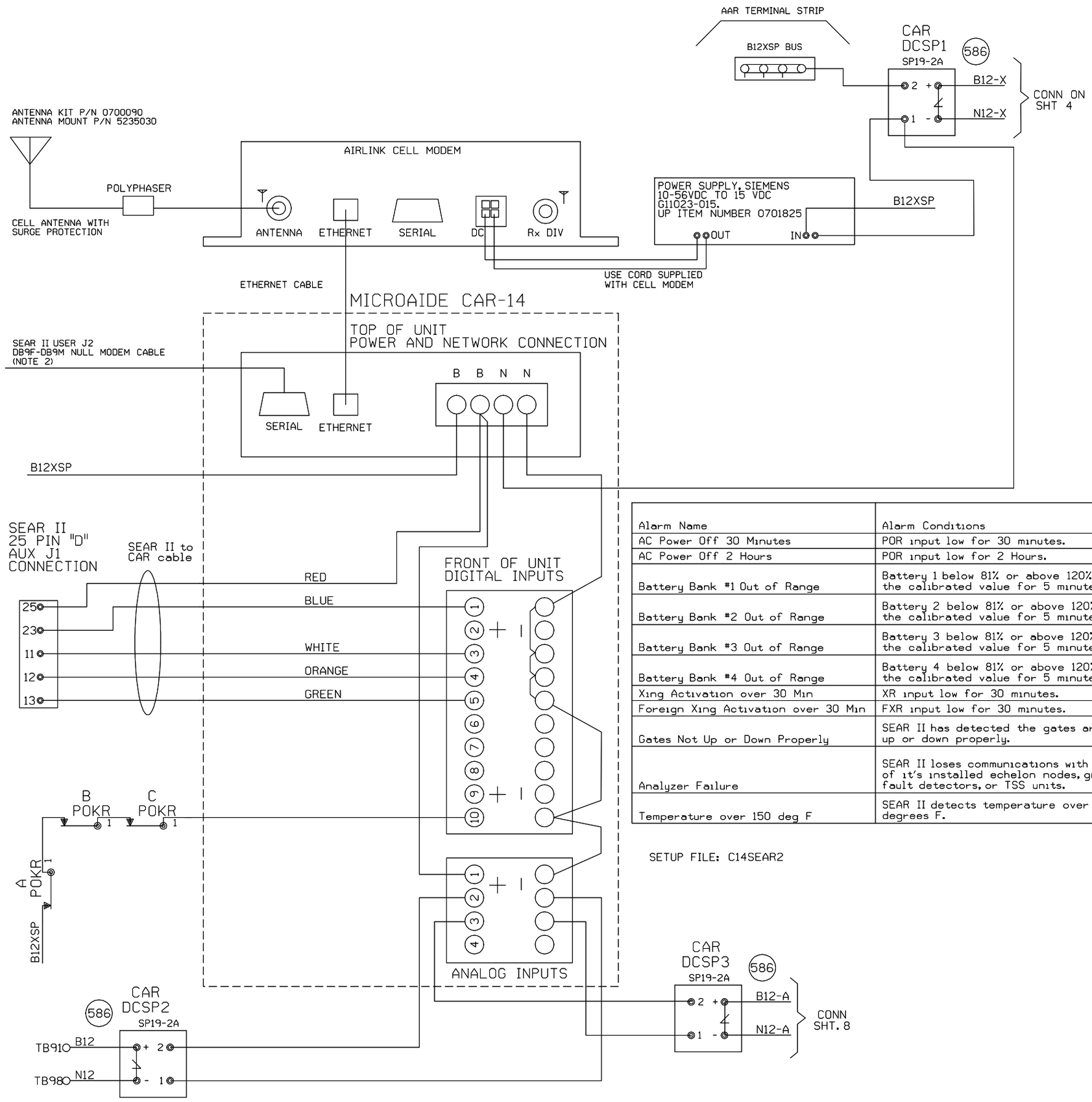

NOTE:
1) DO NOT JUMPER UNUSED INPUTS
2) THE CAR14 SERIAL PORT IS AVAILABLE TO ADD REMOTE CONNECTIVITY TO EXISTING LOGGING EQUIPMENT. USE NULL MODEM CABLE WITH SHIELDING DISCONNECTED AT ONE OR BOTH SIDES.

ANALOG INPUTS:
A1) B12X BATTERY BANK
A2) B12 BATTERY BANK
A3) B12-A BATTERY BANK
A4) BATTERY BANK 4

DIGITAL INPUTS
D1) XR (BLUE WIRE)
D2) FOREIGN XR
D3) ANALYZER FAILURE (WHITE WIRE)
D4) HIGH TEMPERATURE (ORANGE WIRE)
D5) GATES NOT UP OR DOWN PROPERLY (GREEN WIRE)
D10) POWER OFF INDICATION

Alarm Name	Alarm Conditions	Alarm Clearing Conditions	Cleared by Maintainer Mode?
AC Power Off 30 Minutes	POR input low for 30 minutes.	POR input high for 5 minutes.	No
AC Power Off 2 Hours	POR input low for 2 Hours.	POR input high for 5 minutes.	No
Battery Bank #1 Out of Range	Battery 1 below 81% or above 120% of the calibrated value for 5 minutes.	Battery 1 within acceptable range for 5 minutes.	No
Battery Bank #2 Out of Range	Battery 2 below 81% or above 120% of the calibrated value for 5 minutes.	Battery 2 within acceptable range for 5 minutes.	No
Battery Bank #3 Out of Range	Battery 3 below 81% or above 120% of the calibrated value for 5 minutes.	Battery 3 within acceptable range for 5 minutes.	No
Battery Bank #4 Out of Range	Battery 4 below 81% or above 120% of the calibrated value for 5 minutes.	Battery 4 within acceptable range for 5 minutes.	No
Xing Activation over 30 Min	XR input low for 30 minutes.	XR input high for 10 seconds.	Yes
Foreign Xing Activation over 30 Min	FXR input low for 30 minutes.	FXR input high for 10 seconds.	Yes
Gates Not Up or Down Properly	SEAR II has detected the gates are not up or down properly.	SEAR II has detected the gates are up or down properly.	No
Analyzer Failure	SEAR II loses communications with any of it's installed echelon nodes, ground fault detectors, or TSS units.	SEAR II has recovered after an analyzer failure alarm.	No
Temperature over 150 deg F	SEAR II detects temperature over 150 degrees F.	SEAR II sensor detects temperature is OK after a High-Temp alarm.	No

SETUP FILE: C14SEAR2

NEW SHEET

Designed: 12/21/15
INSTALL FLS/GATES & CONSTANT WARNING AT TOUHY AVENUE
M.P. 8.81
Req#: WO#: 32327
IS: /NBT
/ /PRS/JTB

MODIFICATION LEVEL	
Q.A. LAST LEVEL CHECKED	DU
LAST LEVEL MOD THIS TYPICAL	DU
LAST LEVEL BY DESIGNER	DU
CHANGED FROM TYPICAL?	Y

REV 01.24.11 4K ACDCCAR14SII.3

CIRCUIT MODIFICATIONS ARE NOT TO BE MADE WITHOUT AUTHORITY FROM THE OFFICE OF SIGNAL DESIGN

Date: 12/21/15
Des: PRS
Chk: NBT
AFE: 32327

UNION PACIFIC RAILROAD
DES PLAINES, ILLINOIS
TOUHY AVENUE
MILWAUKEE SUBDIVISION
Office of AVP Engineering - Signal Omaha, Nebraska

Sh.: 2A
DOT 174087Y
MP: 8.81
ID: NEW0881.2AX

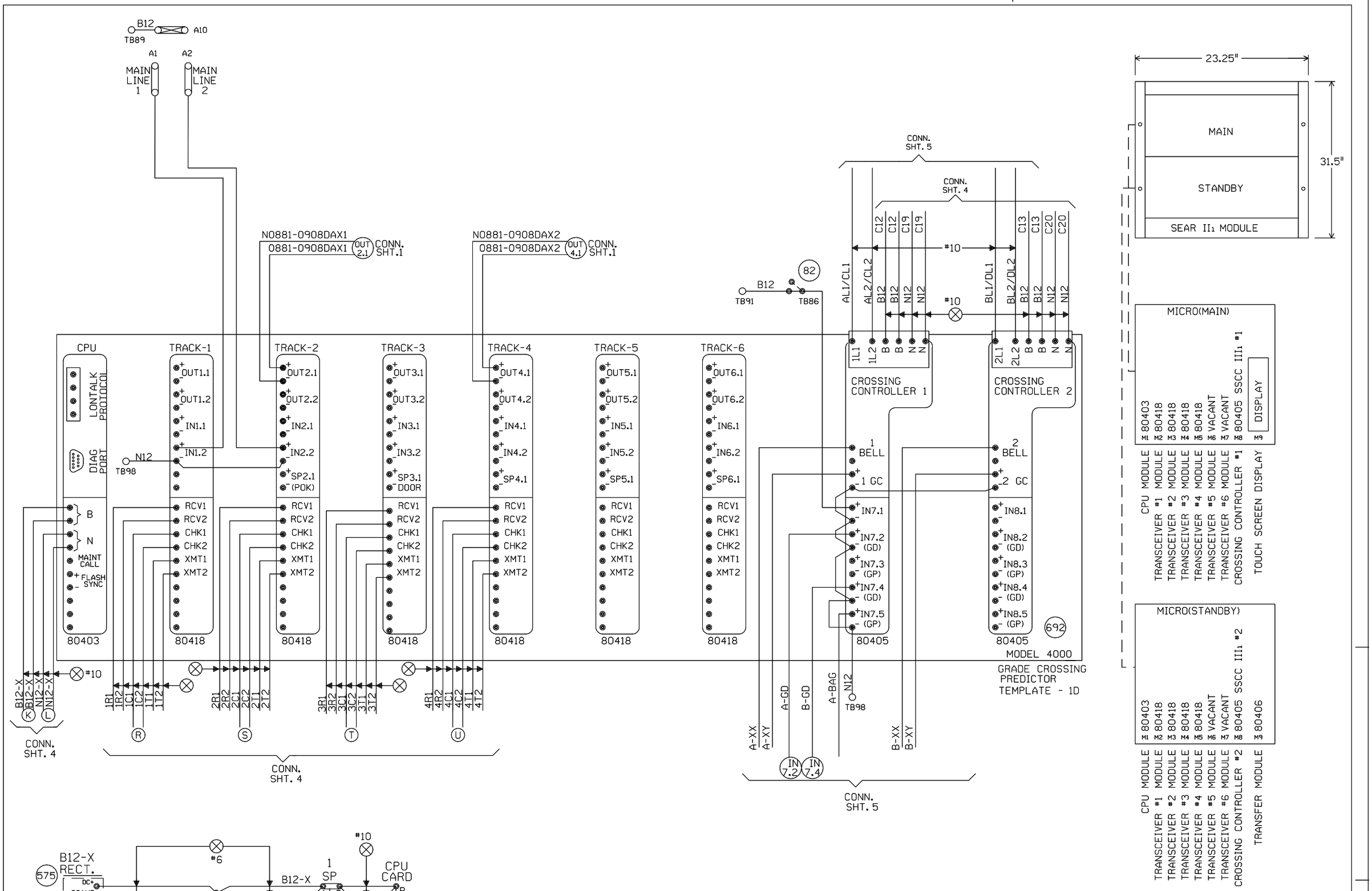

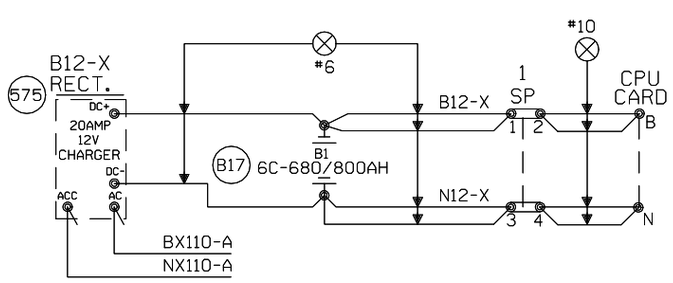

"Mf" FREQUENCY (HZ)	MAXIMUM TRANSMIT WIRE LENGTH (FEET)
86	100
114	125
156	150
211	200
285-970	250

NOTE:
EACH TRANSMITTER TO RAIL WIRE FROM XMT1 AND XMT2 MUST NOT EXCEED THE MAXIMUM LENGTH SPECIFIED IN THE TABLE SHOWN. THE RECEIVER WIRE LENGTH IS NOT CRITICAL. DOES NOT APPLY TO 6 TRACK WIRE APPLICATION.

NEW SHEET

Designed: 12/21/15
INSTALL FLS/GATES & CONSTANT WARNING AT TOUHY AVENUE M.P. 8.81
Rec#: WO#: 32327
IS: /NBT
/PRS/JTB

MODIFICATION LEVEL	
Q. A. LAST LEVEL CHECKED	DU
LAST LEVEL MOD THIS TYPICAL	DU
LAST LEVEL BY DESIGNER	DU
CHANGED FROM TYPICAL?	Y

REV 01.24.11 4K 4TKB4GF.3

CIRCUIT MODIFICATIONS ARE NOT TO BE MADE WITHOUT AUTHORITY FROM THE OFFICE OF SIGNAL DESIGN

Date: 12/21/15
Des: PRS
Chk: NBT
AFE: 32327

UNION PACIFIC RAILROAD
DES PLAINES, ILLINOIS
TOUHY AVENUE
MILWAUKEE SUBDIVISION
Office of AVP Engineering - Signal Omaha, Nebraska

Sh.: 3
DOT 174087Y
MP: 8.81
ID: NEW0881.3X

Minimum Program Steps Report

Location and SIN

DOT Number: 174087Y
Milepost Number: 8.81
Site Name: DES PLAINES, ILLINOIS

SIN: 762010010016 *

* Parameter is part of office check number calculation.

MCF and Template Selection

MCF Name: GCP-T6X-02-6.mcf
MCF Revision: 26
MCFCRC: 494D2656

Template = 1D:3 Uni pairs (OCCN) *

* Parameter is part of office check number calculation.

Minimum Program Steps

MS4000 configuration
Track 1 : GCP Frequency = 348 Hz (OCCN,TCN) (Hidden) *
Track 1 : Uni/Bi/Sim-Bidirnl = Sim. Bidirnl (OCCN,TCN) (Hidden) *
Track 1 : Isl Frequency = 8.3 kHz (OCCN) (Hidden) *
Track 1 : Pickup Delay (2s +) = 2 sec (OCCN) (Hidden) *
IN 1.2 = Out Of Service IP 1 (OCCN) (Hidden) *

MS4000 Predictor
Track 1 : Prime Warning Time = 31 sec (OCCN) (Hidden) *

BASIC: module configuration
Track 3/PSO 2 Slot = Track (OCCN) *
Track 4/PSO 3 Slot = Track (OCCN) *

PREDICTORS: track 2
Track 2 : Dax A Used = Yes (OCCN) *

PREDICTORS: track 4
Track 4 : Dax A Used = Yes (OCCN) *

GCP: track 1
Track 1 : GCP Frequency = 348 Hz (OCCN,TCN) *
Track 1 : Approach Distance = 3169 ft (OCCN,TCN) *
Track 1 : Uni/Bi/Sim-Bidirnl = Sim. Bidirnl (OCCN,TCN) *
Track 1 : Island Distance = 198 ft (Set in Field,TCN)

GCP: track 1 prime
Track 1 : Prime Warning Time = 31 sec (OCCN) *

GCP: track 2
Track 2 : GCP Frequency = 348 Hz (OCCN,TCN) *
Track 2 : Approach Distance = 3169 ft (OCCN,TCN) *
Track 2 : Uni/Bi/Sim-Bidirnl = Sim. Bidirnl (OCCN,TCN) *

GCP: track 2 prime
Track 2 : Prime Warning Time = 31 sec (OCCN) *

GCP: track 2 Dax A

Track 2 : Dax A Warning Time = 29 sec (OCCN) *
Track 2 : Dax A Offset Distance = 1930 ft (OCCN) *

GCP: track 3
Track 3 : GCP Frequency = 348 Hz (OCCN,TCN) *
Track 3 : Approach Distance = 3169 ft (OCCN,TCN) *
Track 3 : Island Distance = 198 ft (Set in Field,TCN)

GCP: track 3 prime
Track 3 : Prime Warning Time = 31 sec (OCCN) *

GCP: track 4
Track 4 : GCP Frequency = 348 Hz (OCCN,TCN) *
Track 4 : Approach Distance = 3169 ft (OCCN,TCN) *
Track 4 : Uni/Bi/Sim-Bidirnl = Sim. Bidirnl (OCCN,TCN) *

GCP: track 4 prime
Track 4 : Prime Warning Time = 31 sec (OCCN) *

GCP: track 4 Dax A
Track 4 : Dax A Warning Time = 29 sec (OCCN) *
Track 4 : Dax A Offset Distance = 1930 ft (OCCN) *

ISLAND: track 1
Track 1 : Isl Frequency = 8.3 kHz (OCCN) *
Track 1 : Pickup Delay (2s +) = 2 sec (OCCN) *

ISLAND: track 3
Track 3 : Isl Frequency = 10.0 kHz (OCCN) *
Track 3 : Pickup Delay (2s +) = 2 sec (OCCN) *

AND: AND 1 XR
AND 1 Enable Used = Yes (OCCN) *

ADVANCED: out of service
OOS Control = OOS IPs (OCCN) *

ADVANCED: out of service 2
T2 OOS Control = OOS Input 1 (OCCN) *
T4 OOS Control = OOS Input 3 (OCCN) *

SSCC
Bell On Gate Rising = Yes (OCCN) *

OUTPUT: assignment page 1
OUT 2.1 = T2 Dax A (OCCN) *

OUTPUT: assignment page 2
OUT 4.1 = T4 Dax A (OCCN) *

INPUT: assignment page 1
IN 1.2 = Out Of Service IP 1 (OCCN) *
IN 2.2 = Out Of Service IP 3 (OCCN) *

IO: assignment SSCC
IN 7.1 = AND 1 XR Enable (OCCN) *

Express: MS4000 configuration
Track 1 : GCP Frequency = 348 Hz (OCCN,TCN) (Hidden) *
Track 1 : Uni/Bi/Sim-Bidirnl = Sim. Bidirnl (OCCN,TCN) (Hidden) *
Track 1 : Pickup Delay (2s +) = 2 sec (OCCN) (Hidden) *
IN 1.2 = Out Of Service IP 1 (OCCN) (Hidden) *

Express: MS4000 Predictor
Track 1 : Prime Warning Time = 31 sec (OCCN) (Hidden) *

* Parameter is part of office check number calculation.

Check Numbers

Office Check Number: 035C4ACC
Config. Check Number: 08875CC7
(Based on MCF Revision 26)

Parameters not part of office check number calculation:

Track 1 : Island Distance = 198 ft (Set in Field)
Track 3 : Island Distance = 198 ft (Set in Field)

Comments

<none>

Configuration Package File

Filename: NEW0881_174087Y.pac
Path: U:\01-Xing\up150196-Milwaukee Sub-Touhy Avenue\GCP Programs\
Date/Time: 4/13/2016 10:19:36
DT Version: 5.7.3