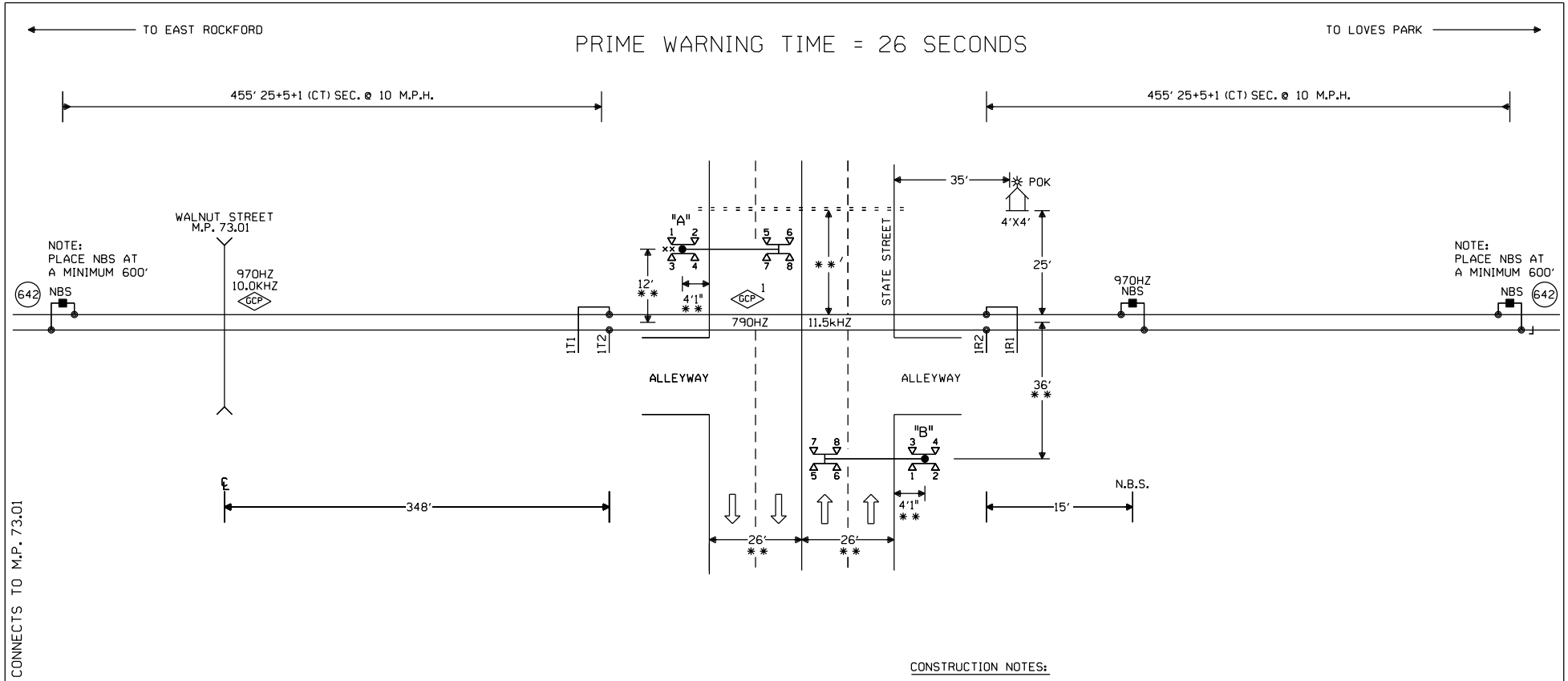

NOTES:

⊗ = TWISTED WIRES
ALL TRACK WIRES 2C. #6
INSULATED 1 TWIST PER FT.
TRANSMITTER AND RECEIVER LEADS
TO BE SEPARATED BY AT LEAST 12" IN TRENCH,
LENGTHS SHOULD NOT EXCEED MANUFACTURER'S
RECOMMENDATION.

TOP OF FOUNDATION TO BE AT SAME ELEVATION
AS THE SURFACE OF THE TRAVELED WAY & NO
MORE THAN 4" ABOVE THE SURFACE OF THE GROUND.

ALL BUNGALOW WIRING TO BE #16 AWG FLEX
UNLESS OTHERWISE SPECIFIED EXCEPT ALL GROUND
WIRE TO BE #6 AWG FLEX OR LARGER

REFER TO UP STANDARD DWG FOR BUNGALOW GROUNDING.

PORTABLE GENERATOR EXTENSION CORD
FOR 240V TO 240V IS PROVIDED AS WELL
AS A 120V TO 240V ADAPTER.

ALL LIGHTS TO BE 12" ROUNDELS.

= = = = = = = 4" X 70' CONDUIT * *

LIGHTS: LED LIGHTS

CANT "A": * *'
CANT "B": * *'

xx = BELL

TRK 1 ISLAND DISTANCE 152' MINIMUM 120' REQUIRED

PREFERRED ISLAND WIRE CONNECTIONS
ARE A MINIMUM 50' FROM EDGE OF ROAD

OFFSET AND ISLAND DISTANCES
TO BE VERIFIED BY FIELD

W(S) ←—○—→ E(N)

CONSTRUCTION NOTES:

1. CABIN LOCATION TO BE VERIFIED BY ICC PERSONNEL.
2. REUSE EXISTING CANTILEVERS.
3. INSTALL NEW BUNGALOW FOR CIRCUIT COMPATIBILITY.
   INSTALLATION TO INCLUDE TAB#653 SHUNT ENHANCER
   PANEL TAB#642 790HZ SHUNT.

* * = FIELD VERIFY

NEW SHEET

					Designed: 02/16/16 INSTALL FLASHERS, GATES,CANTS, AND CWT AT M.P. 73.01 WALNUT Rec#: WO#: 33207 IS: NBT / /CTC/JTB	MODIFICATION LEVEL Q. A. LAST LEVEL CHECKED DU LAST LEVEL MOD THIS TYPICAL DU LAST LEVEL BY DESIGNER DU CHANGED FROM TYPICAL? Y REV 01.24.11 4K 1TKBC.1	CIRCUIT MODIFICATIONS ARE NOT TO BE MADE WITHOUT AUTHORITY FROM THE OFFICE OF SIGNAL DESIGN	Date: 02/16/16 Des: CTC Chk: NBT AFE: 33207	UNION PACIFIC RAILROAD ROCKFORD, ILLINOIS STATE STREET KD IND LD Office of AVP Engineering - Signal Omaha, Nebraska	Sh.: 1 DOT 174469U MP: 72.90 ID: BEV7290.1X

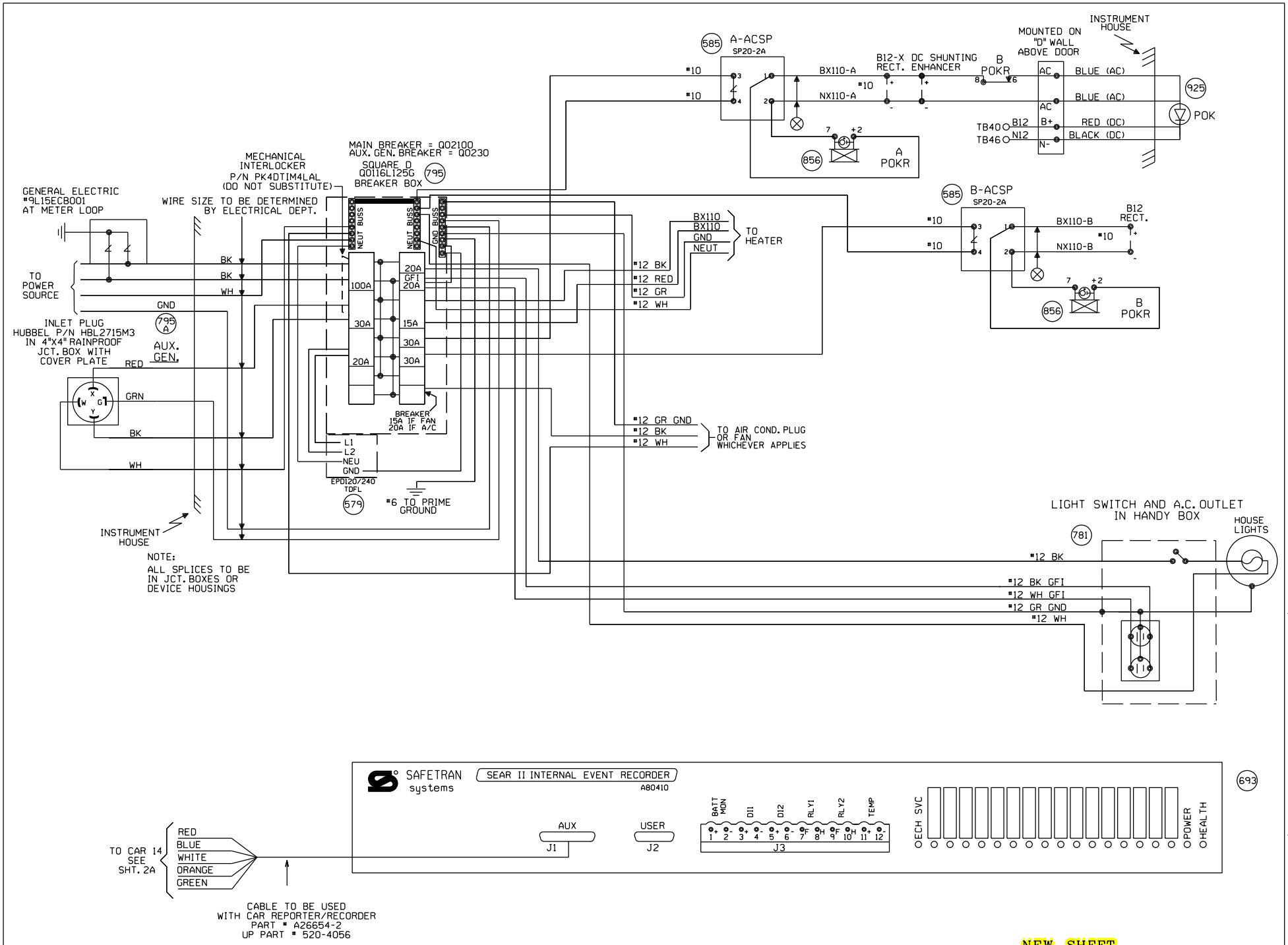

NEW SHEET

Designed: 02/16/16 INSTALL FLASHERS, GATES, CANTS, AND CWT AT M.P. 73.01 WALNUT Rec#: IS: WO#: 33207 /NBT /CTC/JTB	MODIFICATION LEVEL		CIRCUIT MODIFICATIONS ARE NOT TO BE MADE WITHOUT AUTHORITY FROM THE OFFICE OF SIGNAL DESIGN	Date: 02/16/16 Des: CTC Chk: NBT AFE: 33207	UNION PACIFIC RAILROAD ROCKFORD, ILLINOIS STATE STREET KD IND LD Office of AVP Engineering - Signal Omaha, Nebraska	Sh.: 2 DOT 174469U MP: 72.90 ID: BEV7290.2X
	O.A. LAST LEVEL CHECKED	DU				
	LAST LEVEL MOD THIS TYPICAL	DU				
	LAST LEVEL BY DESIGNER	DU				
	CHANGED FROM TYPICAL?	Y				
	REV 01.24.11 4K SEARAC.2					

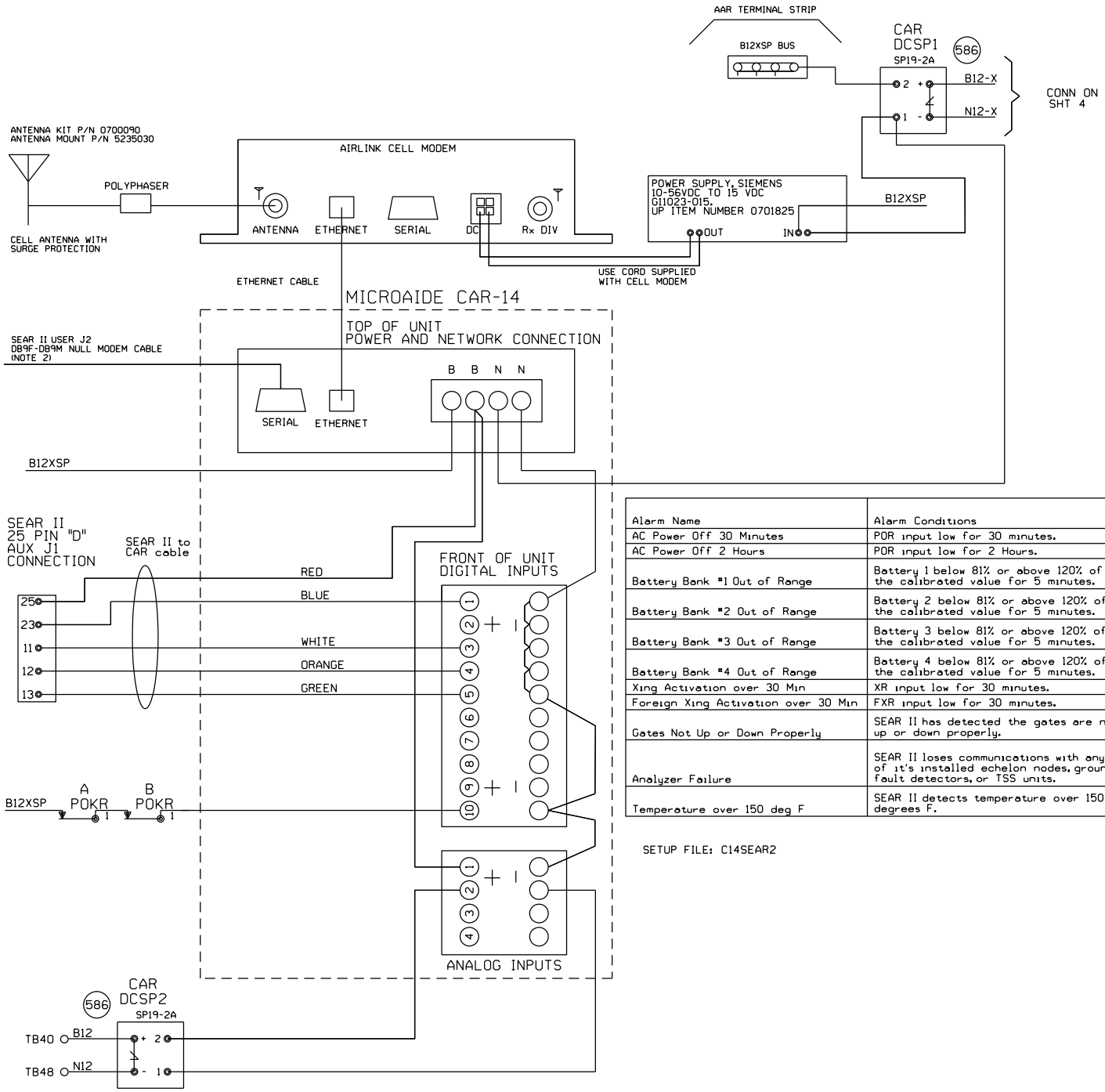

NOTE:
1) DO NOT JUMPER UNUSED INPUTS
2) THE CAR14 SERIAL PORT IS AVAILABLE TO ADD REMOTE CONNECTIVITY TO EXISTING LOGGING EQUIPMENT. USE NULL MODEM CABLE WITH SHIELDING DISCONNECTED AT ONE OR BOTH SIDES.

ANALOG INPUTS:
A1) B12X BATTERY BANK
A2) B12 BATTERY BANK
A3) BATTERY BANK 3
A4) BATTERY BANK 4

DIGITAL INPUTS
D1) XR (BLUE WIRE)
D2) FOREIGN XR
D3) ANALYZER FAILURE (WHITE WIRE)
D4) HIGH TEMPERATURE (ORANGE WIRE)
D5) GATES NOT UP OR DOWN PROPERLY (GREEN WIRE)
D10) POWER OFF INDICATION

Alarm Name	Alarm Conditions	Alarm Clearing Conditions	Cleared by Maintainer Mode?
AC Power Off 30 Minutes	POR input low for 30 minutes.	POR input high for 5 minutes.	No
AC Power Off 2 Hours	POR input low for 2 Hours.	POR input high for 5 minutes.	No
Battery Bank #1 Out of Range	Battery 1 below 81% or above 120% of the calibrated value for 5 minutes.	Battery 1 within acceptable range for 5 minutes.	No
Battery Bank #2 Out of Range	Battery 2 below 81% or above 120% of the calibrated value for 5 minutes.	Battery 2 within acceptable range for 5 minutes.	No
Battery Bank #3 Out of Range	Battery 3 below 81% or above 120% of the calibrated value for 5 minutes.	Battery 3 within acceptable range for 5 minutes.	No
Battery Bank #4 Out of Range	Battery 4 below 81% or above 120% of the calibrated value for 5 minutes.	Battery 4 within acceptable range for 5 minutes.	No
Xing Activation over 30 Min	XR input low for 30 minutes.	XR input high for 10 seconds.	Yes
Foreign Xing Activation over 30 Min	FXR input low for 30 minutes.	FXR input high for 10 seconds.	Yes
Gates Not Up or Down Properly	SEAR II has detected the gates are not up or down properly.	SEAR II has detected the gates are up or down properly.	No
Analyzer Failure	SEAR II loses communications with any of it's installed echelon nodes, ground fault detectors, or TSS units.	SEAR II has recovered after an analyzer failure alarm.	No
Temperature over 150 deg F	SEAR II detects temperature over 150 degrees F.	SEAR II sensor detects temperature is OK after a High-Temp alarm.	No

SETUP FILE: C14SEAR2

NEW SHEET

Designed: 02/16/16
INSTALL FLASHERS, GATES, CANTS, AND CWT AT M.P. 73.01 WALNUT
Rec#: WO#: 33207
IS: /NBT
/ /CTC/JTB

MODIFICATION LEVEL	
Q. A. LAST LEVEL CHECKED	DU
LAST LEVEL MOD THIS TYPICAL	DU
LAST LEVEL BY DESIGNER	DU
CHANGED FROM TYPICAL?	Y

REV 01.24.11 4K ACDCCAR14S11.3

CIRCUIT MODIFICATIONS ARE NOT TO BE MADE WITHOUT AUTHORITY FROM THE OFFICE OF SIGNAL DESIGN

Date: 02/16/16
Des: CTC
Chk: NBT
AFE: 33207

UNION PACIFIC RAILROAD
ROCKFORD, ILLINOIS
STATE STREET
KD IND LD
Office of AVP Engineering - Signal Omaha, Nebraska

Sh.: 2A
DOT 174469U
MP: 72.90
ID: BEV7290.2AX

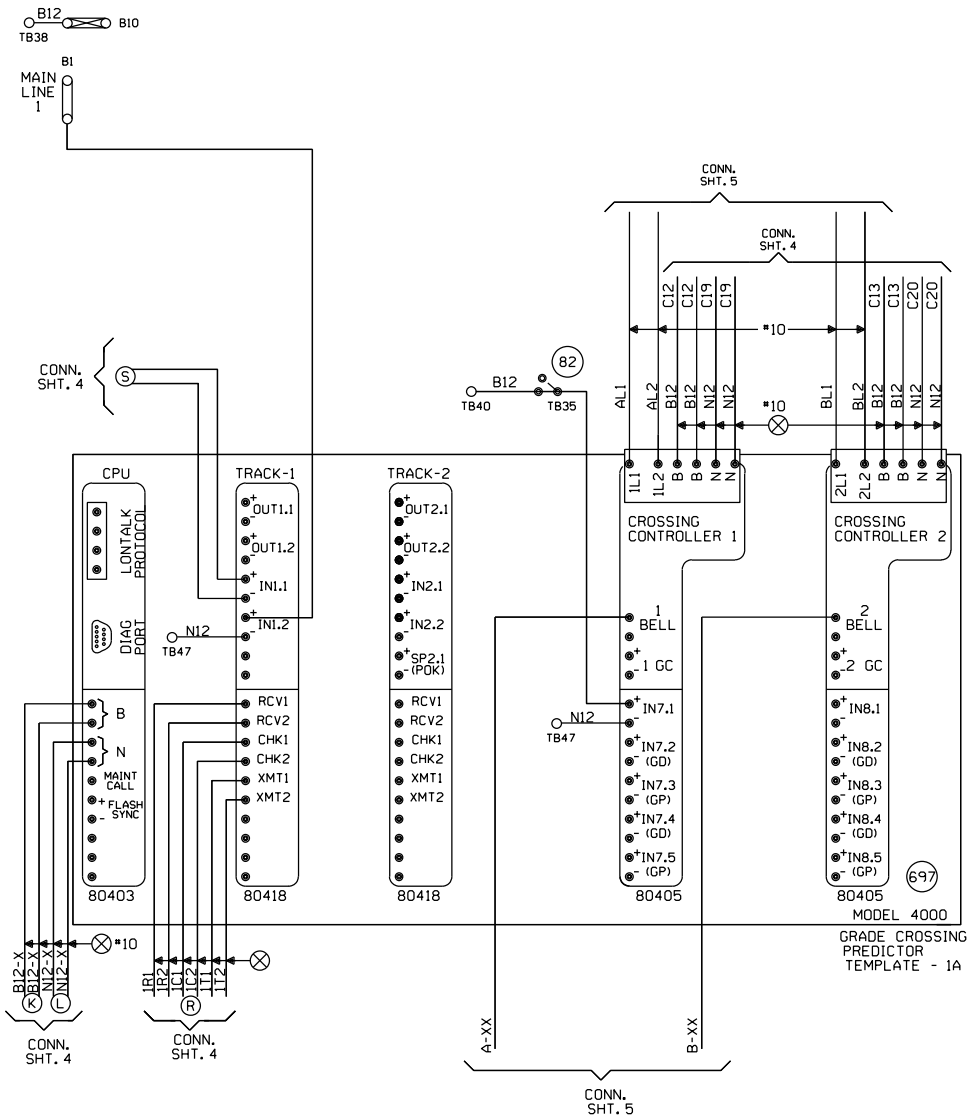

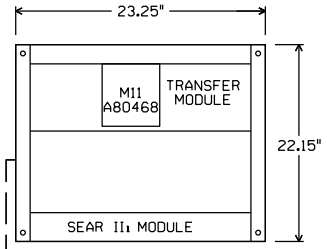

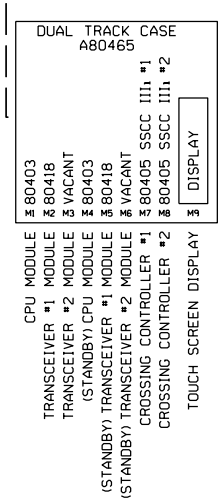

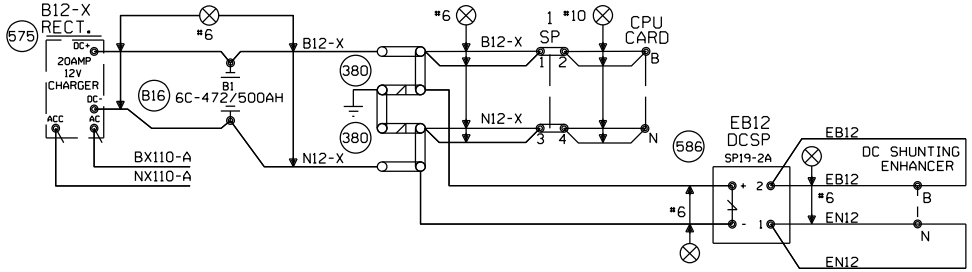

"Mf" FREQUENCY (HZ)	MAXIMUM TRANSMIT WIRE LENGTH (FEET)
86	100
114	125
156	150
211	200
285-970	250

NOTE:
EACH TRANSMITTER TO RAIL WIRE FROM XMT1 AND XMT2 MUST NOT EXCEED THE MAXIMUM LENGTH SPECIFIED IN THE TABLE SHOWN. THE RECEIVER WIRE LENGTH IS NOT CRITICAL. DOES NOT APPLY TO 6 TRACK WIRE APPLICATION.

NEW SHEET

Designed: 02/16/16
INSTALL FLASHERS, GATES, CANTS, AND CWT AT M.P. 73.01 WALNUT
Rec#: 151
WO#: 33207 /NBT /CTC/JTB
rev 01.24.11 4K 2TKGF.3

MODIFICATION LEVEL	
O. A. LAST LEVEL CHECKED	DU
LAST LEVEL MOD THIS TYPICAL	DU
LAST LEVEL BY DESIGNER	DU
CHANGED FROM TYPICAL?	Y

CIRCUIT MODIFICATIONS ARE NOT TO BE MADE WITHOUT AUTHORITY FROM THE OFFICE OF SIGNAL DESIGN

Date: 02/16/16
Des: CTC
Chk: NBT
AFE: 33207

UNION PACIFIC RAILROAD
ROCKFORD, ILLINOIS
STATE STREET
KD IND LD
Office of AVP Engineering - Signal Omaha, Nebraska

Sh.: 3
DOT 174469U
MP: 72.90
ID: BEV7290.3X

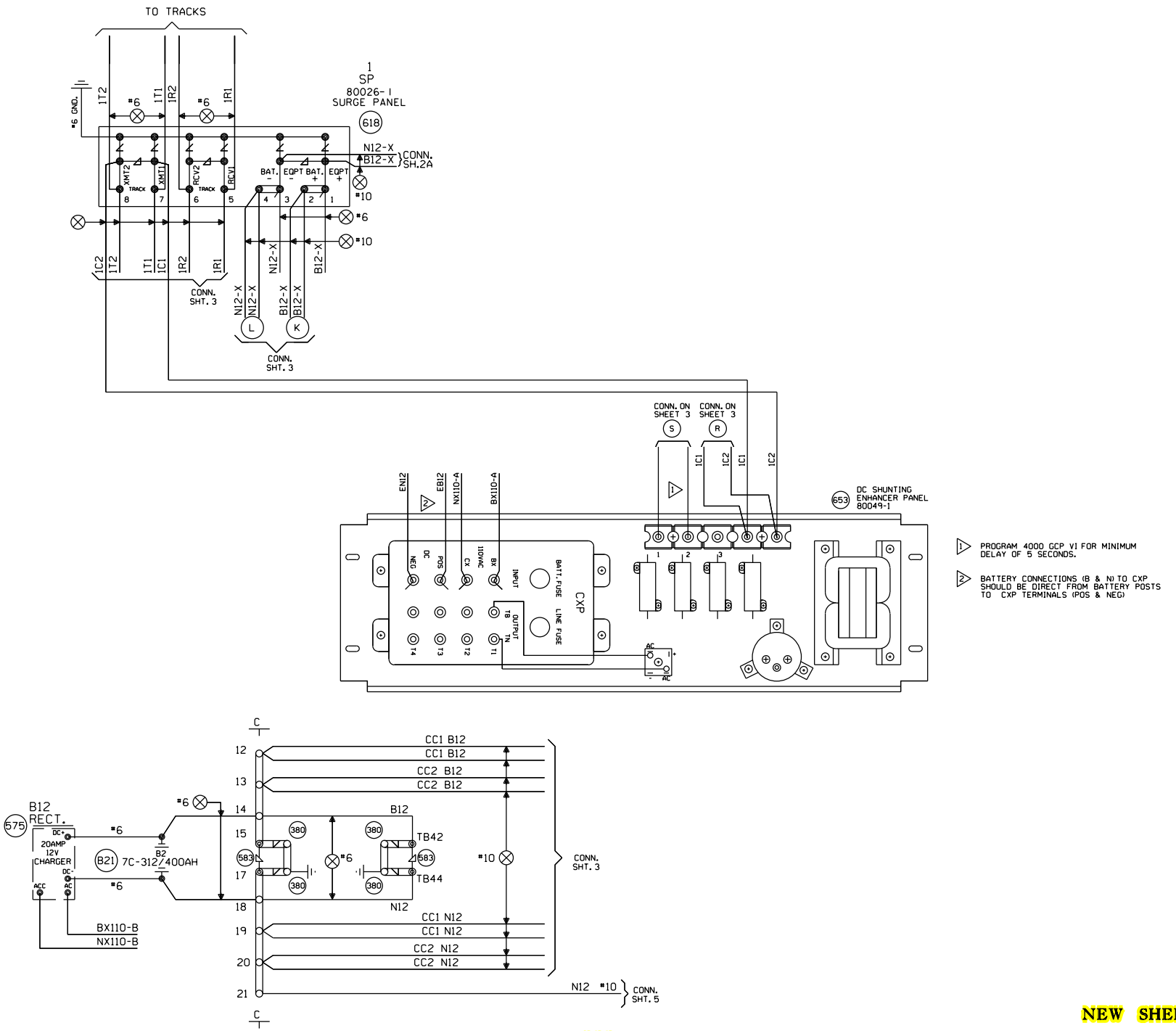

NEW SHEET

Designed: 02/16/16 INSTALL FLASHERS, GATES, CANTS, AND CWT AT M.P. 73.01 WALNUT	MODIFICATION LEVEL		
	Q. A. LAST LEVEL CHECKED	DU	
	LAST LEVEL MOD THIS TYPICAL	DU	
	LAST LEVEL BY DESIGNER	DU	
Rec#: 151 WO#: 33207 NBT CTC/JTB	CHANGED FROM TYPICAL?	Y	
	REV 01.24.11 4K 4TKSPGFC.4		

CIRCUIT MODIFICATIONS ARE NOT TO BE MADE WITHOUT AUTHORITY FROM THE OFFICE OF SIGNAL DESIGN

Date: 02/16/16
Des: CTC
Chk: NBT
AFE: 33207

UNION PACIFIC RAILROAD

ROCKFORD, ILLINOIS
STATE STREET
KD IND LD

Office of AVP Engineering - Signal — Omaha, Nebraska

Sh.: 4
DOT 174469U
MP: 72.90
ID: BEV7290.4X

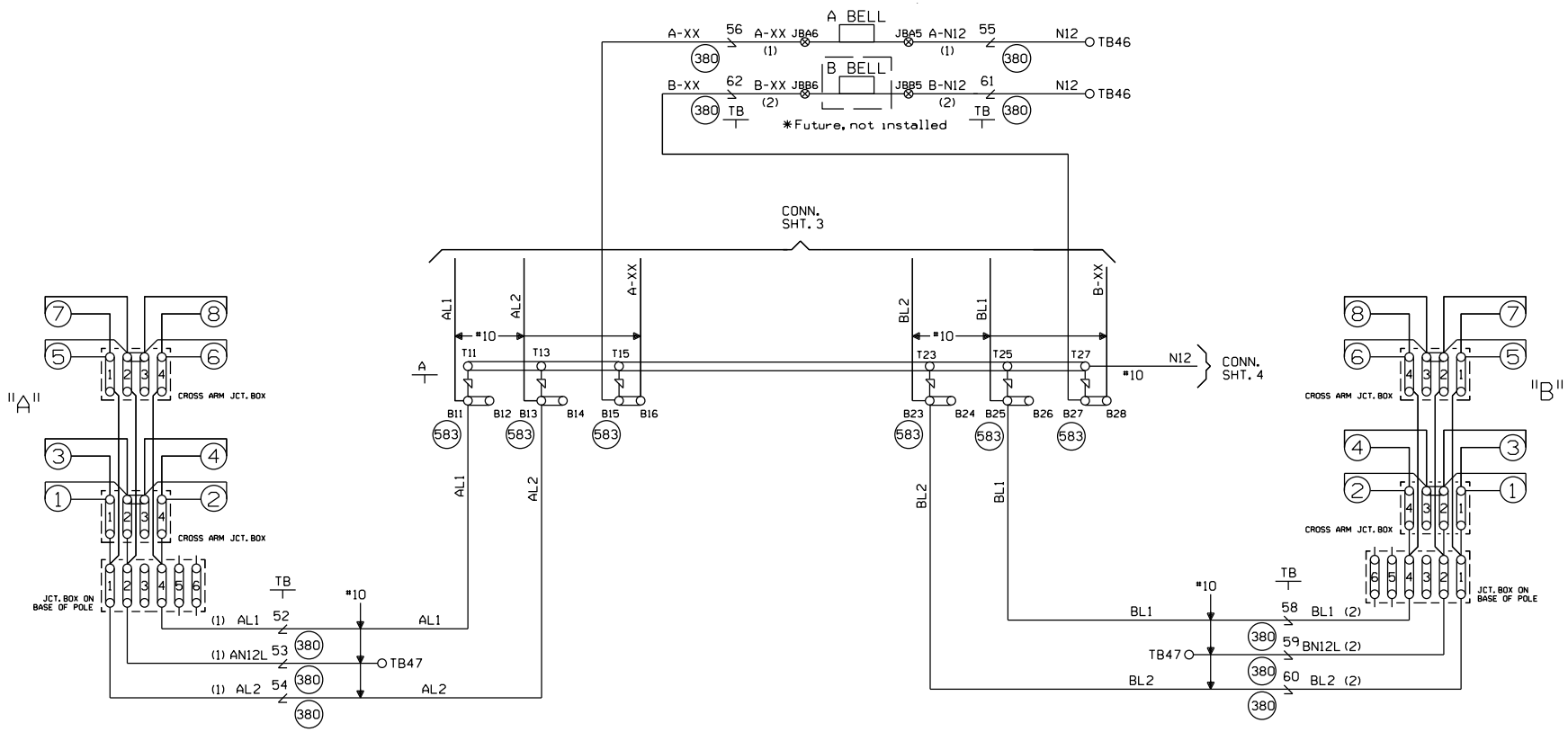

CABLE TABULATION

CABLE NO. 1 5C. NO. 6 U.G.B.T. TO CANT A
CABLE NO. 2 5C. NO. 6 U.G.B.T. TO CANT B

NEW SHEET

					Designed: 02/16/16 INSTALL FLASHERS, GATES, CANTS, AND CWT AT M.P. 73.01 WALNUT Rec#: 15: WO#: 33207 /NBT /CTC/JTB	MODIFICATION LEVEL		CIRCUIT MODIFICATIONS ARE NOT TO BE MADE WITHOUT AUTHORITY FROM THE OFFICE OF SIGNAL DESIGN	Date: 02/16/16 Des: CTC Chk: NBT AFE: 33207	UNION PACIFIC RAILROAD ROCKFORD, ILLINOIS STATE STREET KD IND LD Office of AVP Engineering - Signal Omaha, Nebraska	Sh.: 5 DOT 174469U MP: 72.90 ID: BEV7290.5X
						O. A. LAST LEVEL CHECKED	DU				
						LAST LEVEL MOD THIS TYPICAL	DU				
						LAST LEVEL BY DESIGNER	DU				
						CHANGED FROM TYPICAL? REV 01.24.11 4K CGTYP.6	Y				

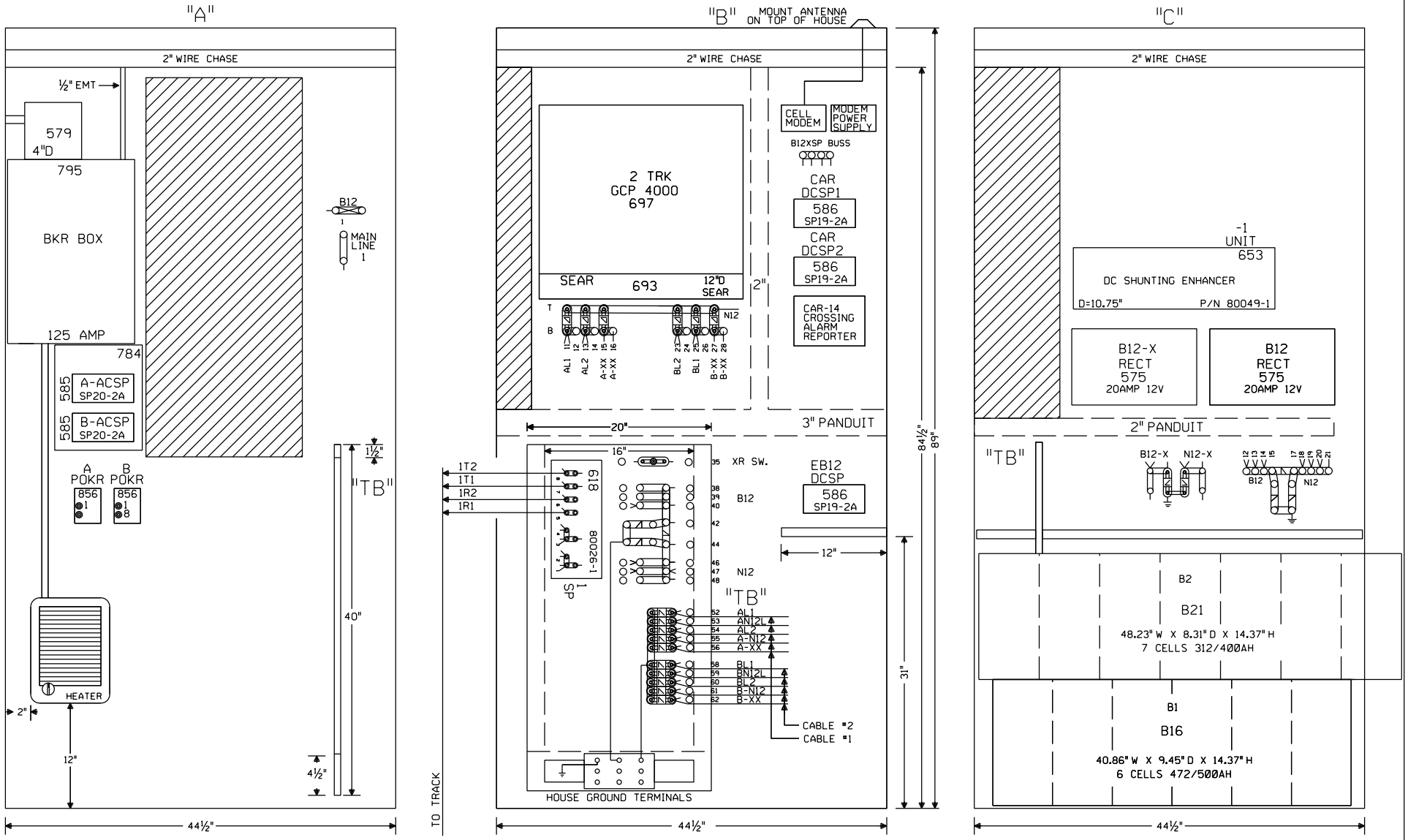

NOTE: ALL DIMENSIONS SHOWN ARE APPROXIMATE.

GNB BATTERIES ONLY

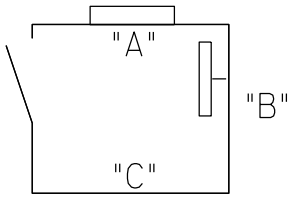

4X4 HOUSE WITH BLOWER U.P. PART#520-2528

NEW SHEET

Designed: 02/16/16 INSTALL FLASHERS, GATES,CANTS, AND CWT AT M.P. 73.01 WALNUT Rec#: IS: WO#: 33207 /NBT /CTC/JTB	MODIFICATION LEVEL		CIRCUIT MODIFICATIONS ARE NOT TO BE MADE WITHOUT AUTHORITY FROM THE OFFICE OF SIGNAL DESIGN	Date: 02/16/16 Des: CTC Chk: NBT AFE: 33207	UNION PACIFIC RAILROAD ROCKFORD, ILLINOIS STATE STREET KD IND LD Office of AVP Engineering - Signal Omaha, Nebraska	Sh.: 6 DOT 174469U MP: 72.90 ID: BEV7290.6X
	Q. A. LAST LEVEL CHECKED	DU				
	LAST LEVEL MOD THIS TYPICAL	DU				
	LAST LEVEL BY DESIGNER	DU				
	CHANGED FROM TYPICAL? REV 01.24.11 4K REMOTE.5	Y				