REVISIONS				
NO.	DATE	BY	DESCRIPTION	APP. BY
1				
2				
3				
4				
5				

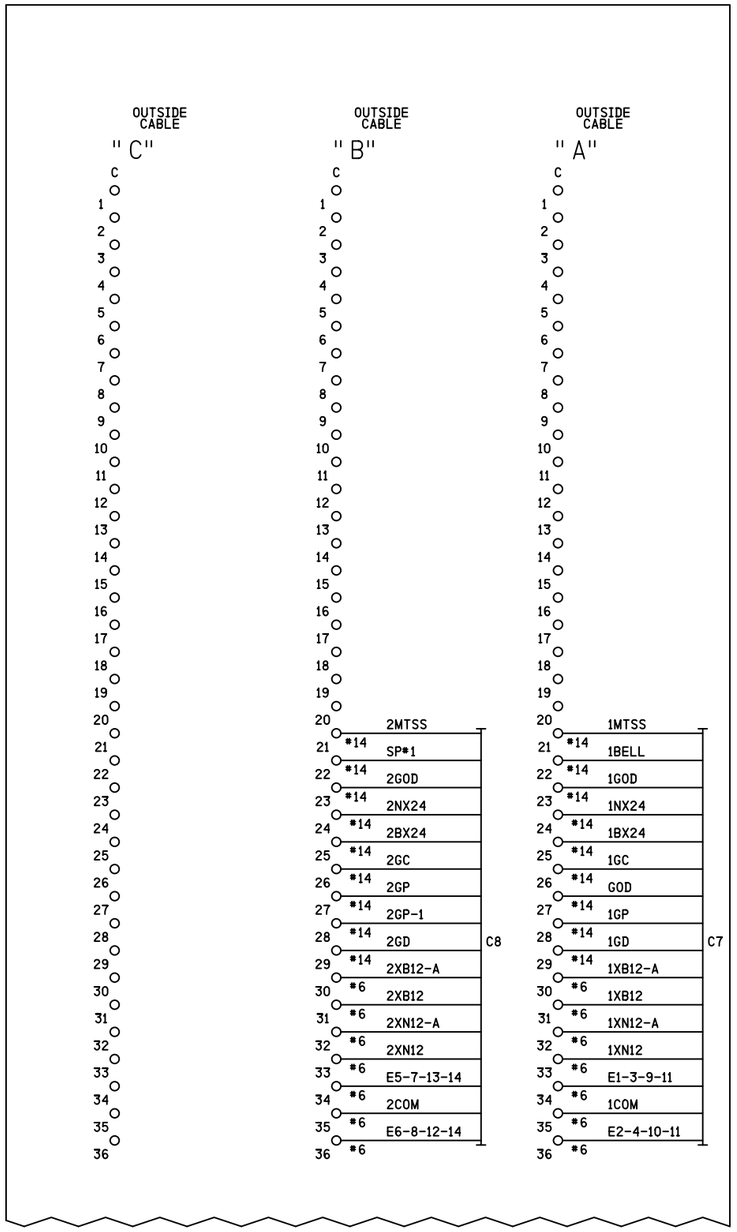

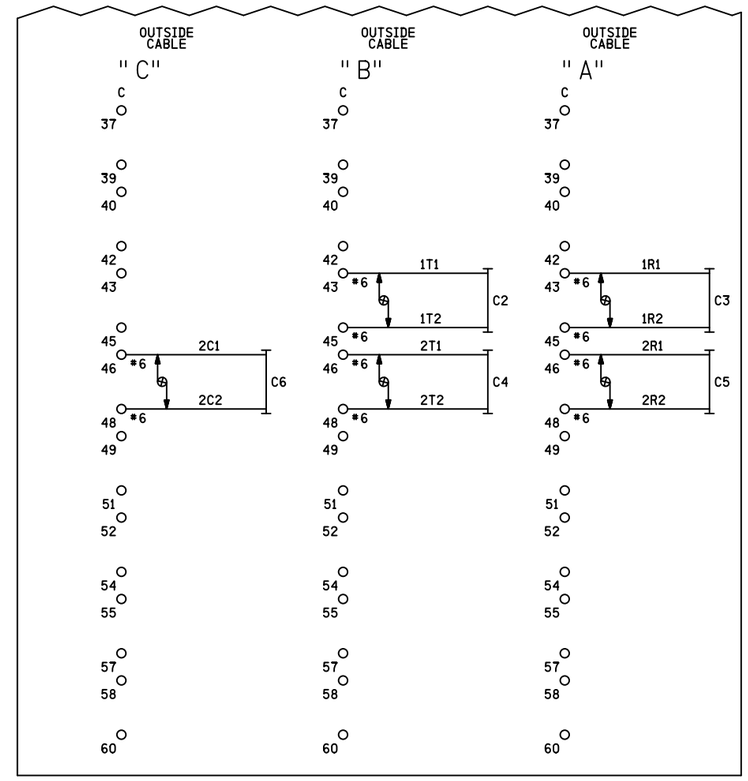

NOTES

DENOTES TWISTED PAIR

SIEMENS INDUSTRY INC
LOUISVILLE DIVISION, LOUISVILLE, KY

SIEMENS INDUSTRY INC			
DES.: BEH	DATE: 02/06/16	JOB NO.: PICA10768	
CKD.: MRB	ISSUE DATE: N/A	EST. NO. XP-8140	
DRN.: BEH	PLAN NO.: N/A	SHEET 15 OF 17	
P TIME: 12:40	P DATE: 21-JUL-2016	CAD ID.: GIL-194.70-15	

SII 02 JUN 2016

PROPOSED
DESIGN NO. 15-0079
RED-IN YELLOW-OUT

AS INSTALLED
DATE _____
BY _____
(PRINT NAME)

PROPOSED D	M	Y	REVISIONS	D	C	COMPLETED D	M	Y	C

REGION SOUTHERN
SUB. GILMAN 349

SIGNALS AND COMMUNICATIONS HOMEWOOD
02 JUNE 2016
DES. BEH
CH. MRB

MAIN TERMINAL BOARD
OUTSIDE DETAIL SIDE D
SPRINGFIELD, IL
STANFORD AVE

GIL-194.70-15

DOT# 908 306S

gil-194.70-15.dgn
21-JUL-2016

REVISIONS				
NO.	DATE	BY	DESCRIPTION	APP. BY
1				
2				
3				
4				
5				

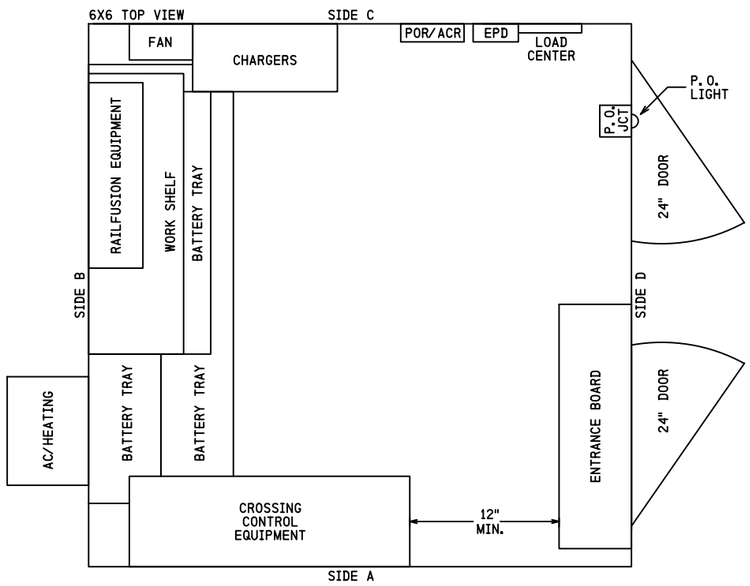

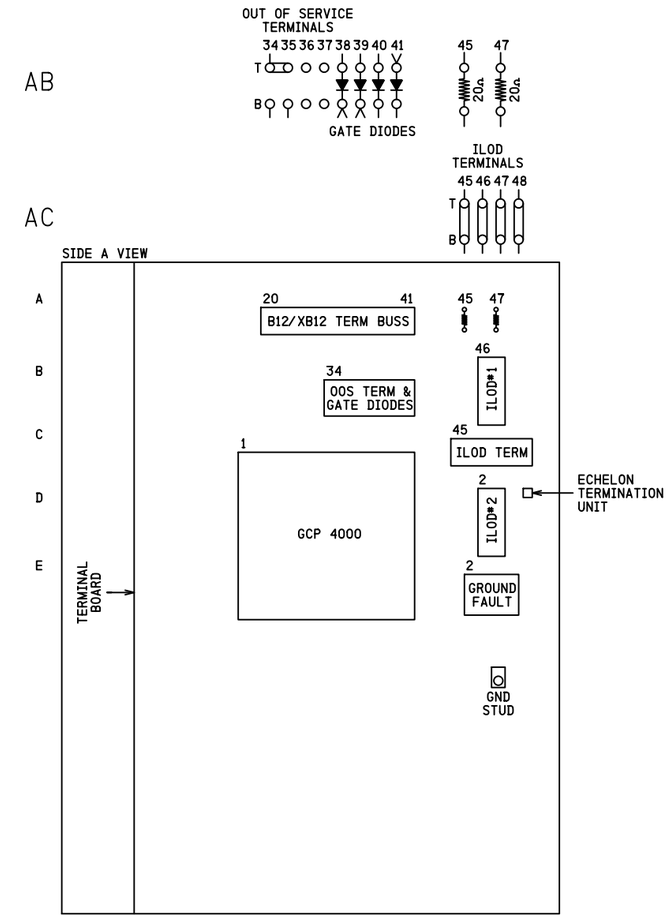

SIEMENS INDUSTRY INC			
DES.: BEH	DATE: 02/06/16	JOB NO.: PICA10768	
CKD.: MRB	ISSUE DATE: N/A	EST. NO.: XP-8140	
DRN.: BEH	PLAN NO.: N/A	SHEET 16 OF 17	
P TIME: 12:40	P DATE: 21-JUL-2016	CAD ID.: GIL-194.70-16	

SII 02 JUN 2016

PROPOSED
DESIGN NO. 15-0079
RED-IN YELLOW-OUT

AS INSTALLED
DATE _____
BY _____
(PRINT NAME)

PROPOSED D	M	Y	REVISIONS	D	C	COMPLETED D	M	Y	C

REGION SOUTHERN
SUB. GILMAN 349

SIGNALS AND COMMUNICATIONS HOMEWOOD
02 JUNE 2016
DES. BEH
CH. MRB

BUNGALOW LAYOUT
TOP VIEW & SIDE A
SPRINGFIELD, IL
STANFORD AVE

GIL-194.70-16

DOT# 908 306S

gil-194.70-16.dgn
21-JUL-2016

SIEMENS INDUSTRY INC
LOUISVILLE DIVISION, LOUISVILLE, KY

REVISIONS				
NO.	DATE	BY	DESCRIPTION	APP. BY
1				
2				
3				
4				
5				

gil-194.70-17.dgn
21-JUL-2016

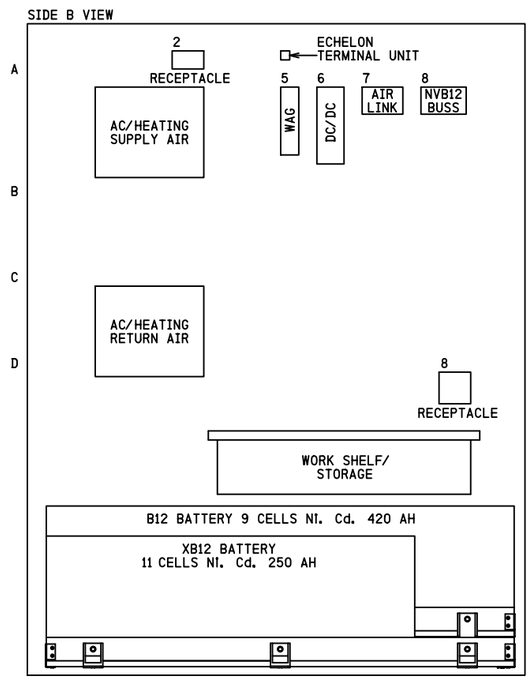

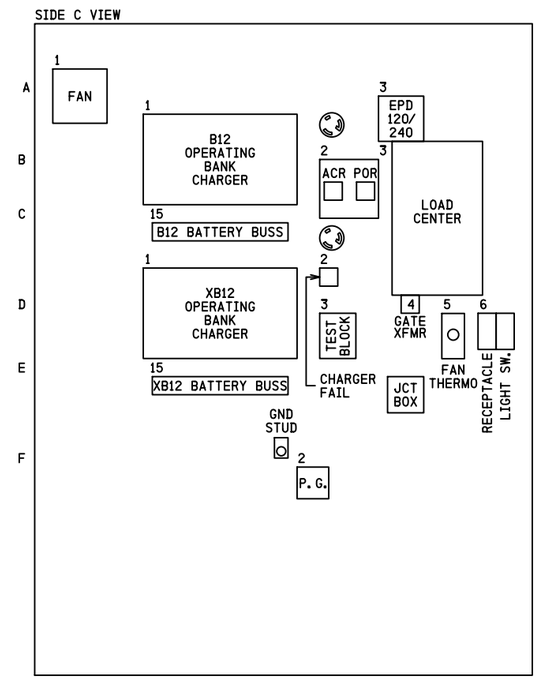

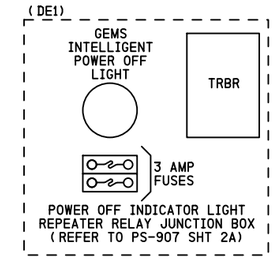

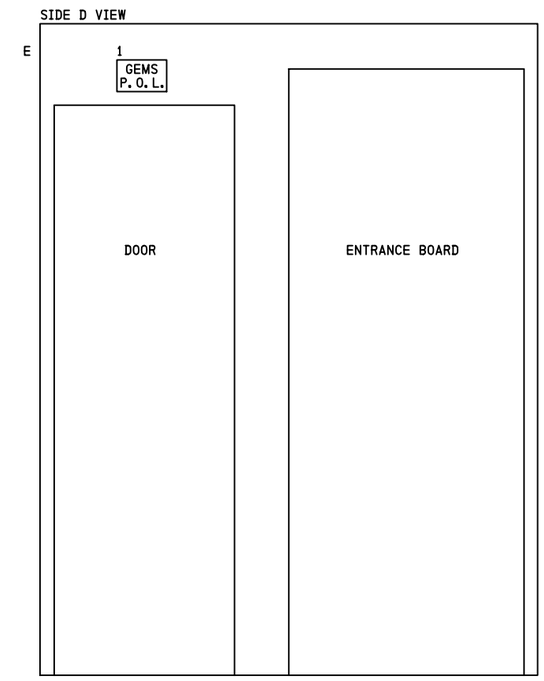

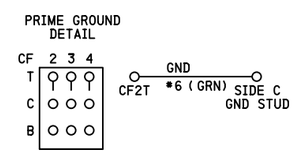

SII 02 JUN 2016

PROPOSED
DESIGN NO. 15-0079
RED-IN YELLOW-OUT

AS INSTALLED
DATE _____
BY _____
(PRINT NAME)

PROPOSED D	PROPOSED M	PROPOSED Y	REVISIONS	D	C	COMPLETED D	COMPLETED M	COMPLETED Y	C

REGION SOUTHERN
SUB. GILMAN 349

SIGNALS AND COMMUNICATIONS HOMEWOOD
02 JUNE 2016
DES. BEH
CH. MRB

BUNGALOW LAYOUT
SIDES B, C, & D
SPRINGFIELD, IL
STANFORD AVE

GIL-194.70-17

DOT#908 306S

18

SIEMENS INDUSTRY INC			
DES.: BEH	DATE: 02/06/16	JOB NO.: PICA10768	
CKD.: MRB	ISSUE DATE: N/A	EST. NO.: XP-8140	
DRN.: BEH	PLAN NO.: N/A	SHEET 17 OF 17	
P TIME: 12:41	P DATE: 21-JUL-2016	CAD ID.: GIL-194.70-17	

SIEMENS INDUSTRY INC
LOUISVILLE DIVISION, LOUISVILLE, KY

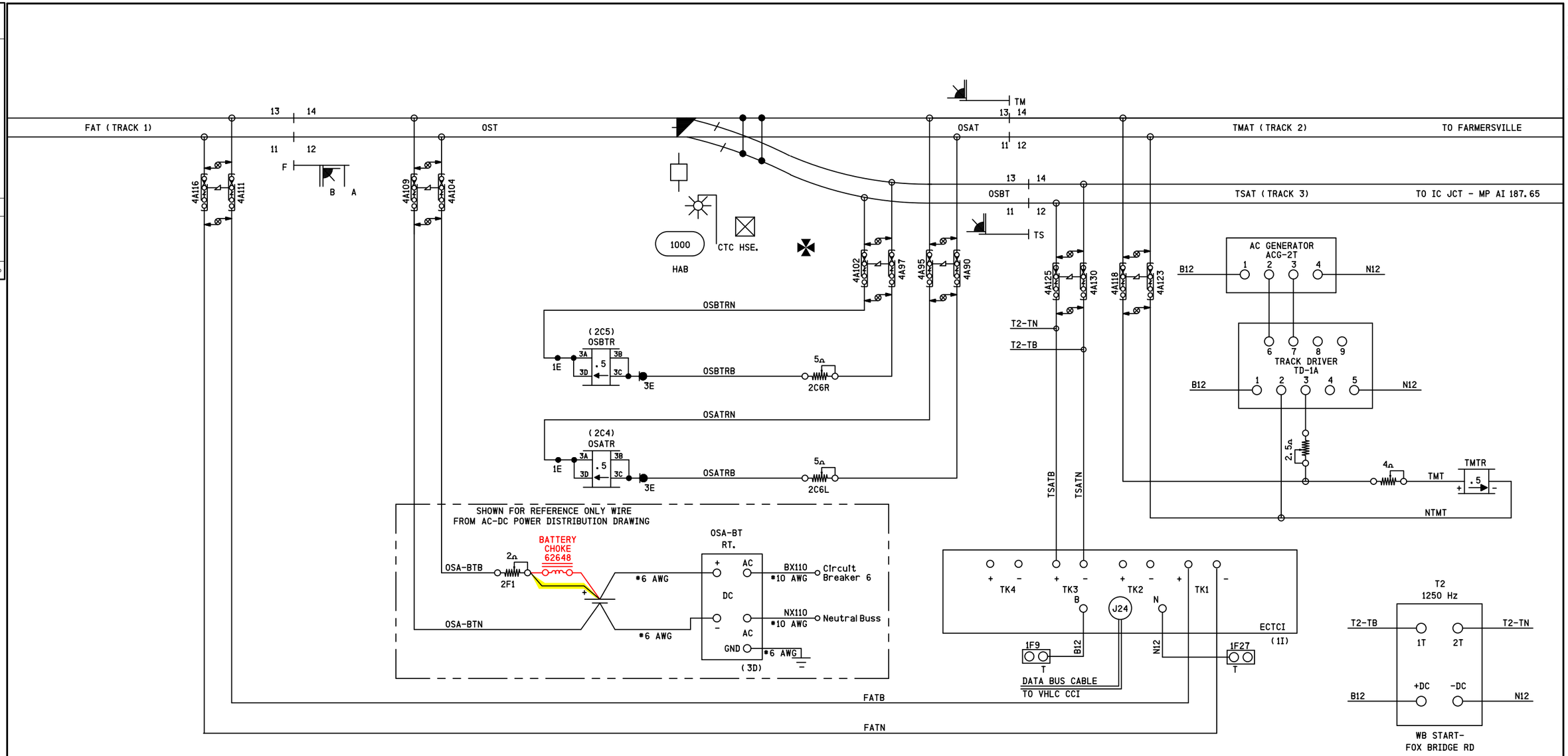

NO.	DATE	BY	DESCRIPTION	APP. BY
1				
2				
3				
4				
5				

REVISIONS

gil-194.50-01.dgn
21-JUL-2016

NOTES

1) ALL WIRING *16 AWG UNLESS OTHERWISE NOTED

2) = TEST LINK - GOLD NUT ON FILLED SIDE

-DENOTES TWISTED PAIR

SIII 02 JUN 2016

PROPOSED
DESIGN NO. 15-0079
RED-IN YELLOW-OUT

AS INSTALLED
DATE _____
BY _____
(PRINT NAME)

PROPOSED D	PROPOSED M	PROPOSED Y	REVISIONS	D	C	COMPLETED D	COMPLETED M	COMPLETED Y	C
			PLAN REDRAWN			02	06	16	SJJ
02	06	16	STANFORD AVE XING	BEH	MRB				

REGION SOUTHERN
SUB. GILMAN 349

SIGNALS AND COMMUNICATIONS HOMEWOOD
16 APRIL 2004
DES. CBV
CH.
TRACK LAYOUT & CIRCUITS

BRICKYARD INTLK
GIL-194.50-01

18

SIEMENS INDUSTRY INC

DES. : BEH	DATE: 02/06/16	JOB NO. : PICA10768	
CKD. : MRB	ISSUE DATE: N/A	EST. NO. :UXXE04429	
DRN. : BEH	PLAN NO. :N/A	SHEET 1 OF 18	
P. TIME:12:41	P. DATE: 21-JUL-2016	CAD ID. : GIL-194.50-01	

SIEMENS INDUSTRY INC
LOUISVILLE DIVISION, LOUISVILLE, KY

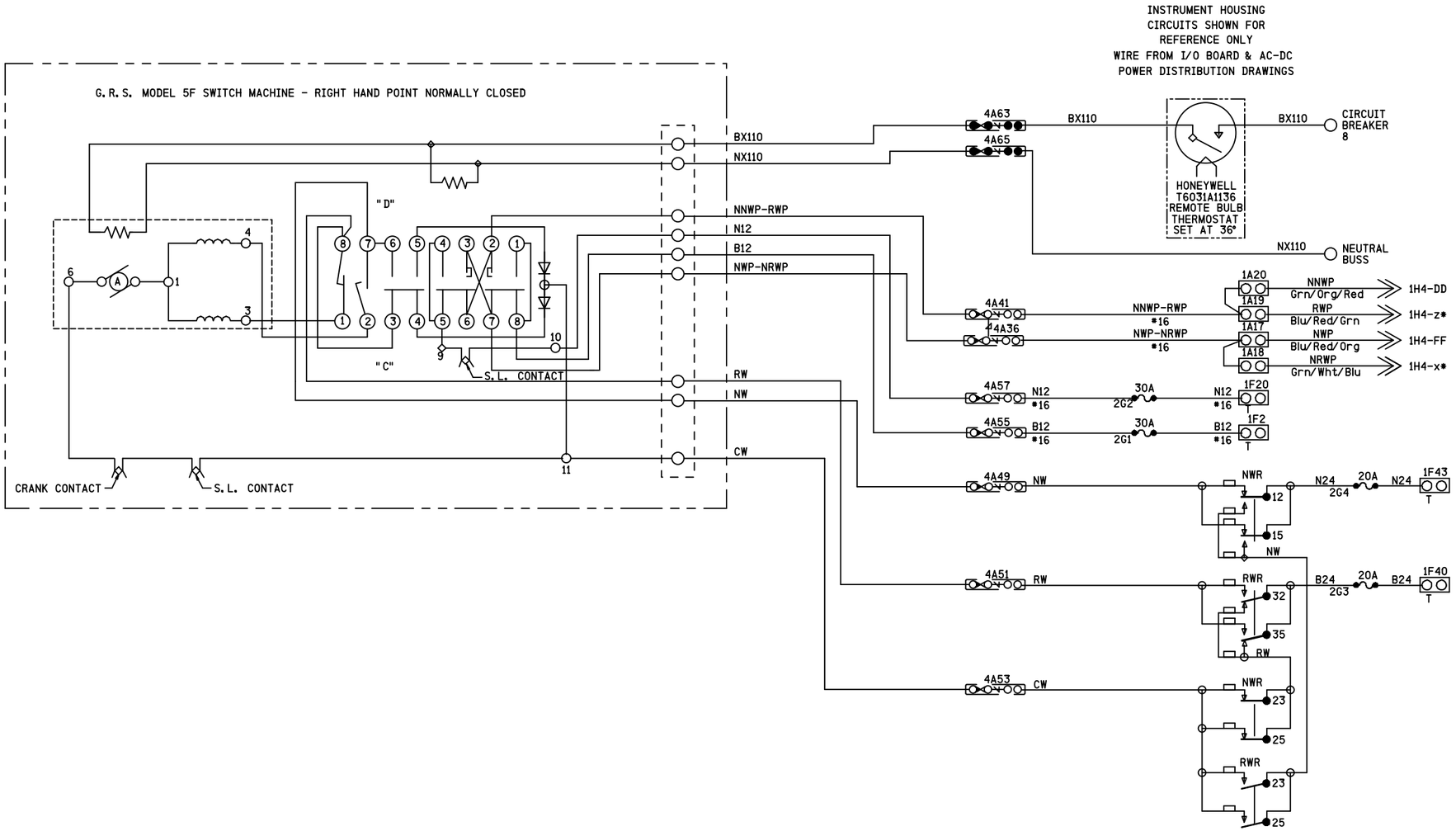

NOTES

1) ALL WIRING TO BE #10 AWG UNLESS OTHERWISE NOTED.
2) * (ASTERISK) DENOTES A LOWERCASE LETTER.
3) = TEST LINK - GOLD NUT ON FILLED SIDE
4) ● FILLED POST=INSULATED NUT.

REVISIONS			
NO.	DATE	BY	DESCRIPTION	APP. BY
1				
2				
3				
4				
5				

SIEMENS INDUSTRY INC		
DES.: BEH	DATE: 02/06/16	JOB NO.: PICA10768
CKD.: MRB	ISSUE DATE: N/A	EST. NO.: JXXE04429
DRN.: BEH	PLAN NO.: N/A	SHEET 2 OF 18
P TIME: 12:41	P DATE: 21-JUL-2016	CAD ID.: GIL-194.50-02

PROPOSED D	M	Y	REVISIONS	D	C	COMPLETED D	M	Y	C
			PLAN REDRAWN			02	06	16	SJJ

REGION SOUTHERN
SUB. GILMAN 349

SIGNALS AND COMMUNICATIONS HOMEWOOD
16 APRIL 2004
DES. CBV
CH.

SWITCH CIRCUITS

BRICKYARD INTLK

GIL-194.50-02

gil-194.50-02.dgn
21-JUL-2016

SIEMENS INDUSTRY INC
LOUISVILLE DIVISION, LOUISVILLE, KY

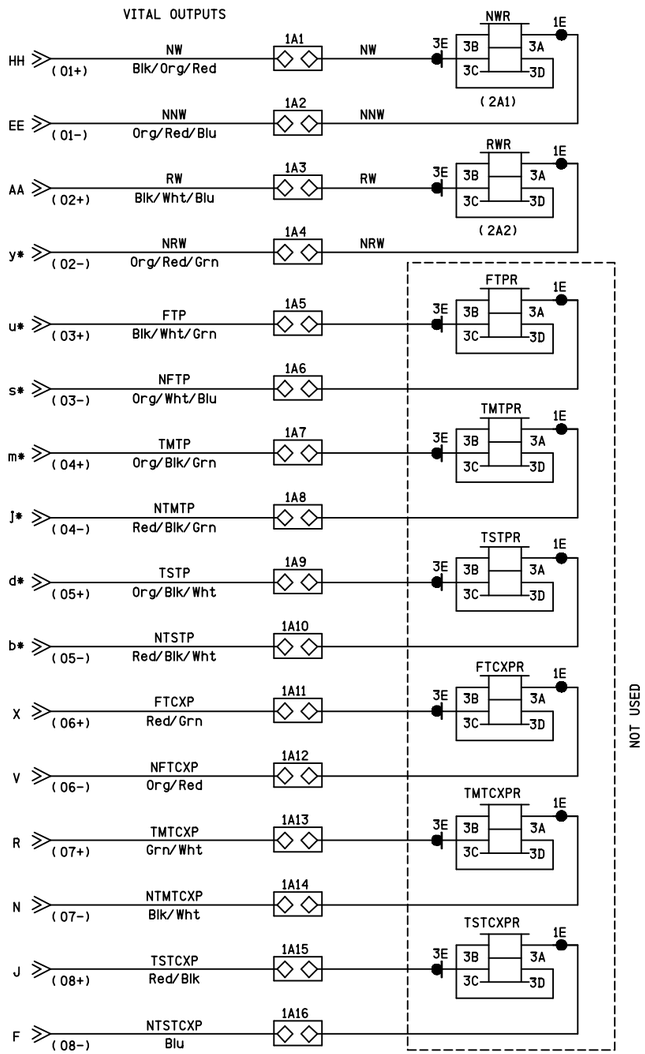

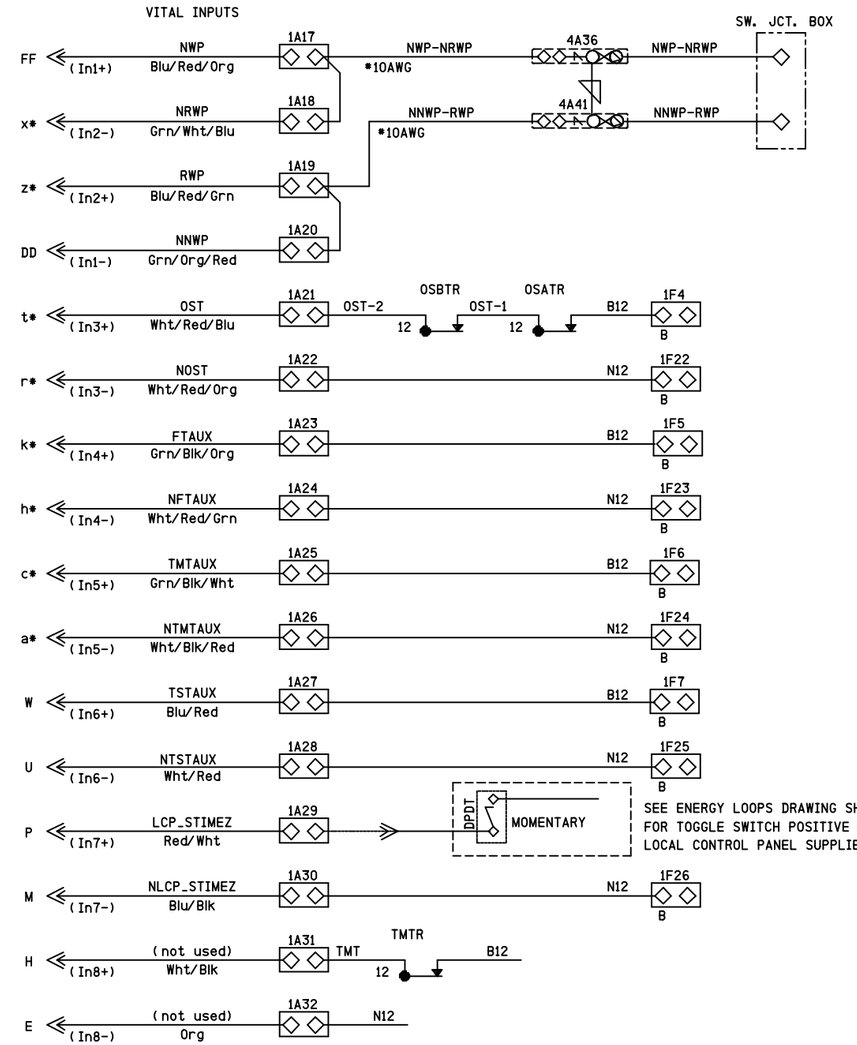

SEE ENERGY LOOPS DRAWING SH. 9
FOR TOGGLE SWITCH POSITIVE FEEDS
LOCAL CONTROL PANEL SUPPLIED BY RR.

Output Pin on Plug Coupler
Input Pin on Plug Coupler

NOTES
1) All wiring #16 AWG unless otherwise noted.
2) * (Asterisk) Denotes a lower case letter
3) Board Part Number 226808-001
4) VGPIO Cable P/N 200124-110
5) = Testlink - Gold nut on filled side.

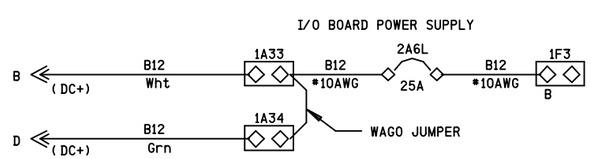

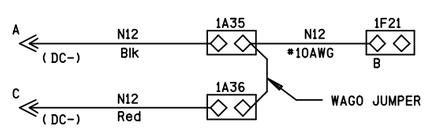

REVISIONS				
NO.	DATE	BY	DESCRIPTION	APP. BY
1				
2				
3				
4				
5				

SIEMENS INDUSTRY INC

DES.: BEH	DATE: 02/06/16	JOB NO.: PICA10768	
CKD.: MRB	ISSUE DATE: N/A	EST. NO.: JXXE04429	
DRN.: BEH	PLAN NO.: N/A	SHEET 3 OF 18	
P TIME: 12:41	P DATE: 21-JUL-2016	CAD ID.: GIL-194.50-03	

PROPOSED D	M	Y	REVISIONS	D	C	COMPLETED D	M	Y	C
			PLAN REDRAWN			02	06	16	SJJ

REGION SOUTHERN
SUB. GILMAN 349

SIGNALS AND COMMUNICATIONS HOMEWOOD
16 APRIL 2004
DES. CBV
CH.

VITAL SIGNAL STOP CIRCUITS

BRICKYARD INTLK

GIL-194.50-03

gil-194.50-03.dgn
21-JUL-2016

SIEMENS INDUSTRY INC
LOUISVILLE DIVISION, LOUISVILLE, KY

REVISIONS			
NO.	DATE	BY	DESCRIPTION	APP. BY
1				
2				
3				
4				
5				

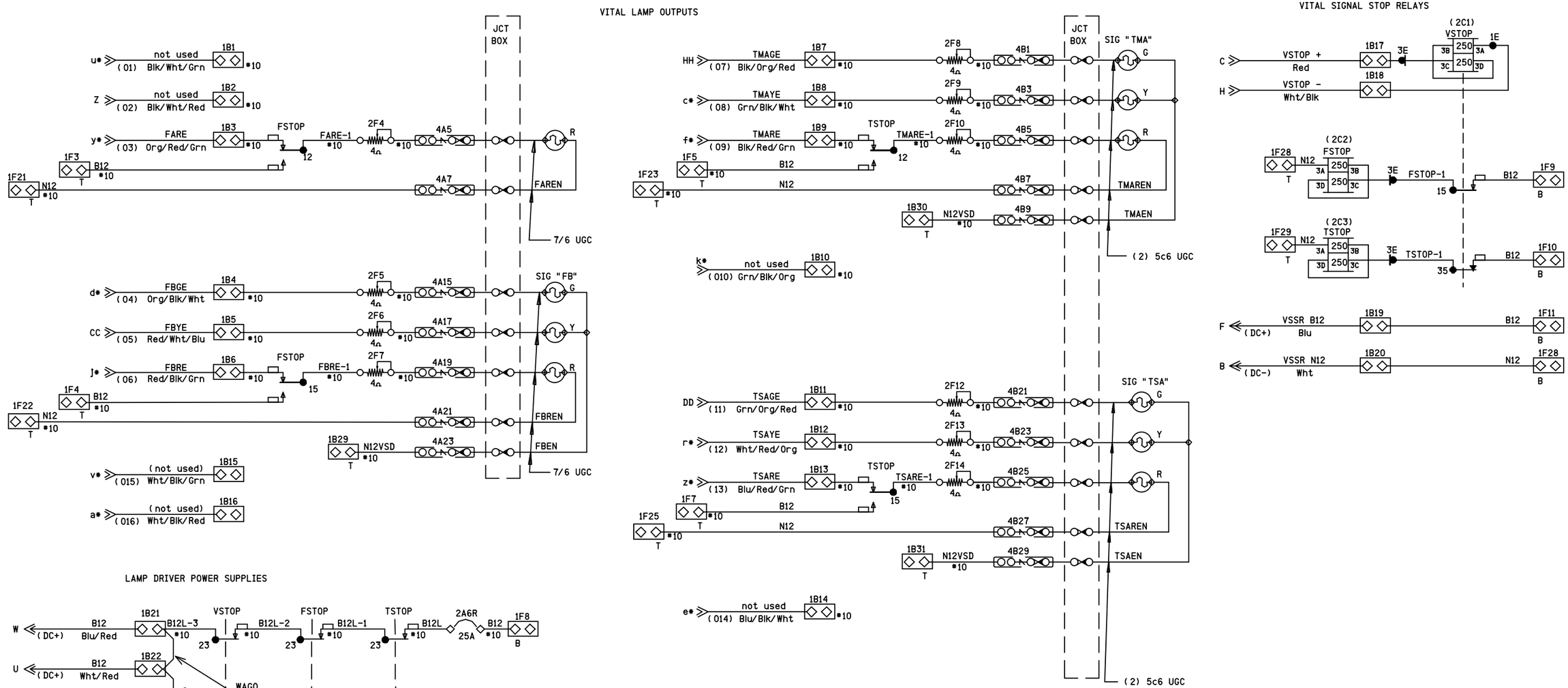

NOTES

1) All wiring #16AWG unless otherwise noted.
2) * (Asterisk) Denotes a lower case letter
3) 150 Watt Maximum continuous output
   (6) 25 Watt Lamps or (8) 18 Watt Lamps
4) VSD Module Part Number 226801-000
5) VSD Cable P/N 200125-010
6) There are no jumpers or switches on this module
7) = TestLink - Gold nut on filled side.

≫ Output Pin on Plug Coupler
≪ Input Pin on Plug Coupler

PROPOSED D	M	Y	REVISIONS	D	C	COMPLETED D	M	Y	C
			PLAN REDRAWN			02	06	16	SJJ

REGION SOUTHERN
SUB. GILMAN 349

SIGNALS AND COMMUNICATIONS HOMEWOOD
16 APRIL 2004
DES. CBV
CH.

VHLC I/O SLOT 5
VITAL SIGNAL DRIVER

BRICKYARD INTLK

GIL-194.50-04

gil-194.50-04.dgn
21-JUL-2016

SIEMENS INDUSTRY INC			
DES.: BEH	DATE: 02/06/16	JOB NO.: PICA10768	
CKD.: MRB	ISSUE DATE: N/A	EST. NO.: JXXE04429	
DRN.: BEH	PLAN NO.: N/A	SHEET 4 OF 18	
P TIME: 12:41	P DATE: 21-JUL-2016	CAD ID.: GIL-194.50-04	

SIEMENS INDUSTRY INC
LOUISVILLE DIVISION, LOUISVILLE, KY

REVISIONS				
NO.	DATE	BY	DESCRIPTION	APP. BY
1				
2				
3				
4				
5				

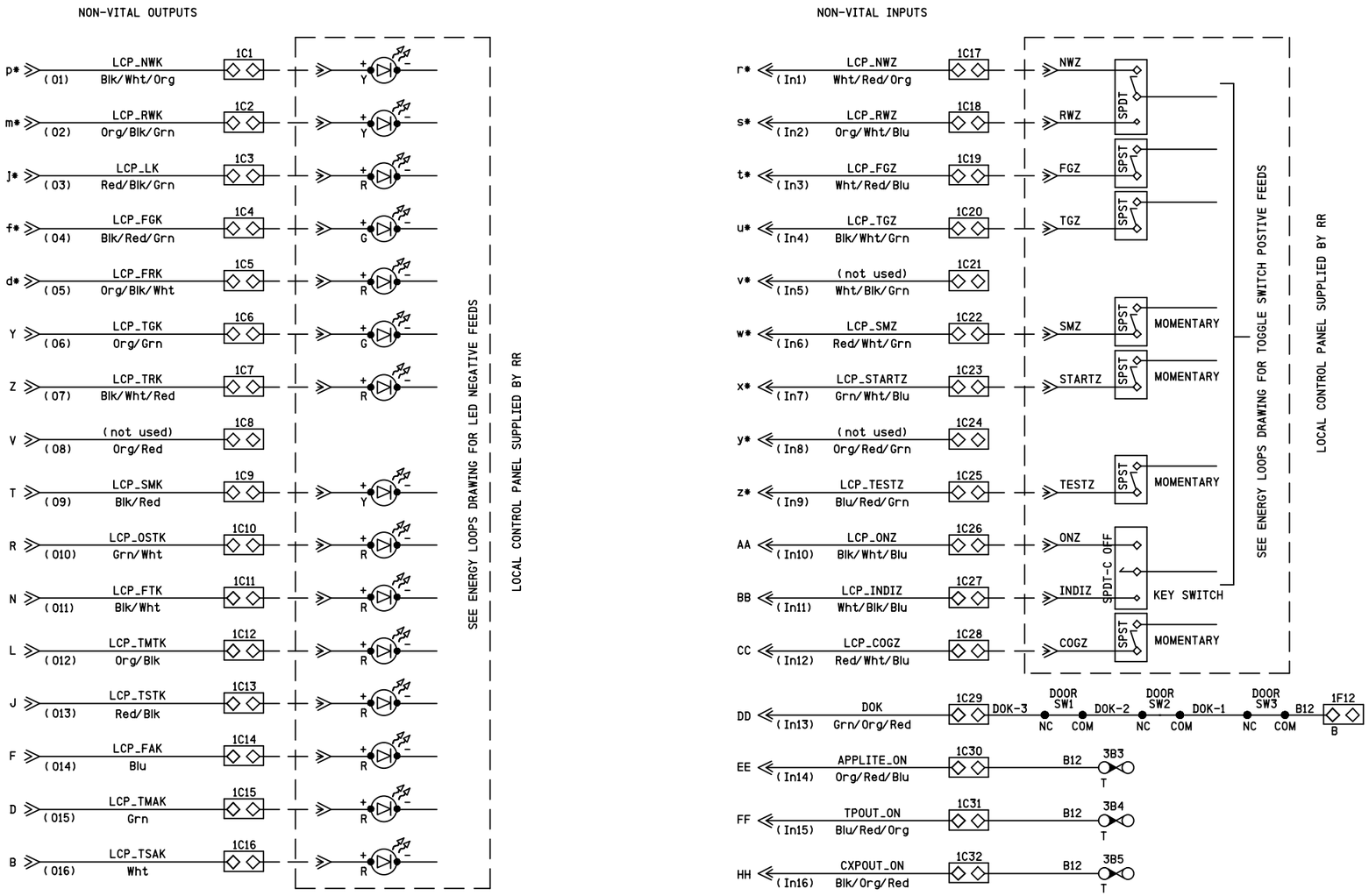

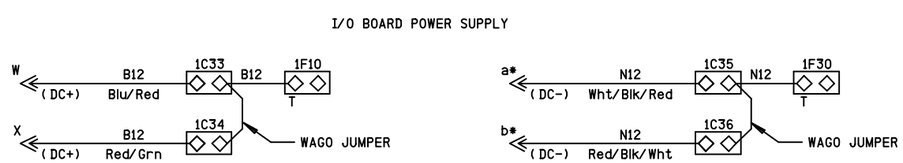

NOTES

1) All wiring #16 AWG unless otherwise noted.
2) * (Asterisk) Denotes a lower case letter
3) Board Part Number 226614-100
4) NVIO Cable P/N 201775-110
5) There are no jumpers of switches on this module
6) = Testlink - Gold nut on filled side.

≫ Output Pin on Plug Coupler
≪ Input Pin on Plug Coupler

SIEMENS INDUSTRY INC			
DES.: BEH	DATE: 02/06/16	JOB NO.: PICA10768	
CKD.: MRB	ISSUE DATE: N/A	EST. NO.: UXXE04429	
DRN.: BEH	PLAN NO.: N/A	SHEET 5 OF 18	
P TIME: 12:41	P DATE: 21-JUL-2016	CAD ID.: GIL-194.50-05	

SIEMENS INDUSTRY INC
LOUISVILLE DIVISION, LOUISVILLE, KY

PROPOSED D	M	Y	REVISIONS	D	C	COMPLETED D	M	Y	C
			PLAN REDRAWN			02	06	16	SJJ

REGION SOUTHERN
SUB. GILMAN 349

SIGNALS AND COMMUNICATIONS HOMEWOOD
16 APRIL 2004
DES. CBV
CH.

VHLC I/O SLOT 6
NON-VITAL I/O MODULE

BRICKYARD INTLK

GIL-194.50-05

gil-194.50-05.dgn
21-JUL-2016

REVISIONS				
NO.	DATE	BY	DESCRIPTION	APP. BY
1				
2				
3				
4				
5				

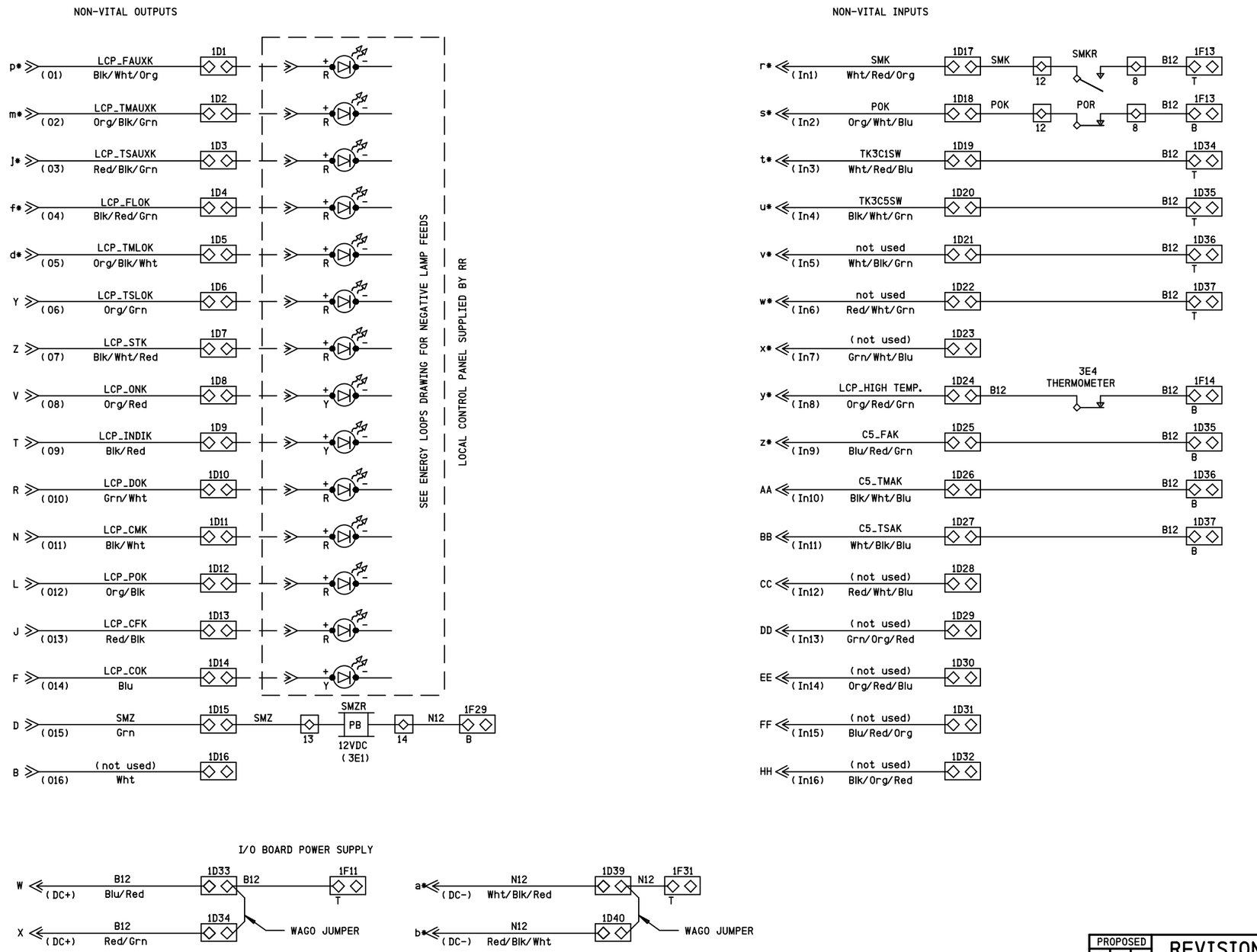

NOTES

1) All wiring #16AWG unless otherwise noted.
2) * (Asterisk) Denotes a lower case letter
3) Board Part Number 226614-100
4) NVIO Cable P/N 201775-110
5) There are no jumpers of switches on this module

≫ Output Pin on Plug Coupler
≪ Input Pin on Plug Coupler

PROPOSED D	M	Y	REVISIONS	D	C	COMPLETED D	M	Y	C
			PLAN REDRAWN			02	06	16	SJJ

REGION SOUTHERN
SUB. GILMAN 349

SIGNALS AND COMMUNICATIONS HOMEWOOD
16 APRIL 2004
DES. CBV
CH.

VHLC I/O SLOT 7
NON-VITAL I/O MODULE

BRICKYARD INTLK

GIL-194.50-06

SIEMENS INDUSTRY INC			
DES.: BEH	DATE: 02/06/16	JOB NO.: PICA10768	
CKD.: MRB	ISSUE DATE: N/A	EST. NO.: JXXE04429	
DRN.: BEH	PLAN NO.: N/A	SHEET 6 OF 18	
P TIME: 12:41	P DATE: 21-JUL-2016	CAD ID.: GIL-194.50-06	

gil-194.50-06.dgn
21-JUL-2016

SIEMENS INDUSTRY INC
LOUISVILLE DIVISION, LOUISVILLE, KY

REVISIONS				
NO.	DATE	BY	DESCRIPTION	APP. BY
1				
2				
3				
4				
5				

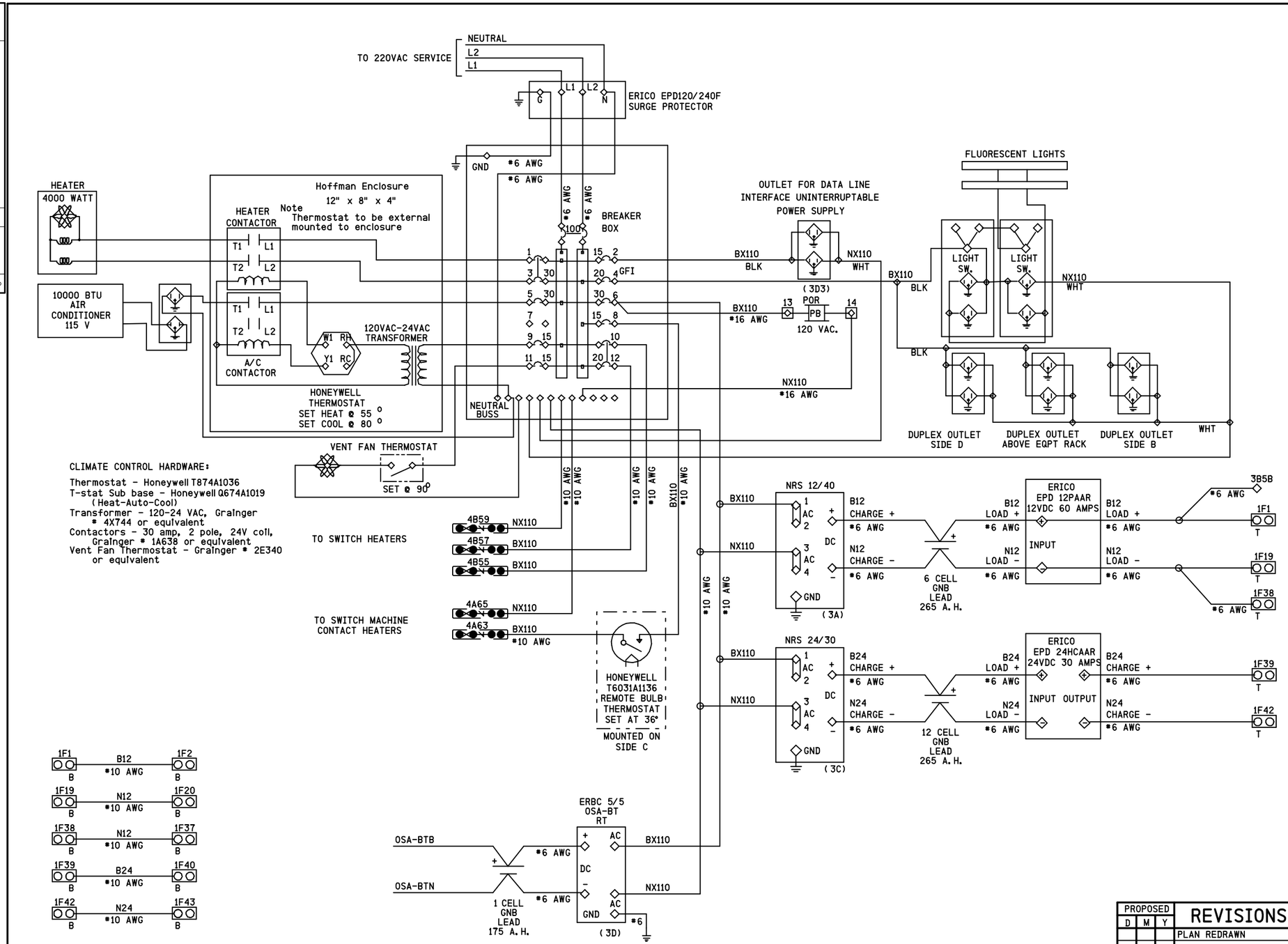

CLIMATE CONTROL HARDWARE:

Thermostat - Honeywell T874A1036
T-stat Sub base - Honeywell Q674A1019
(Heat-Auto-Cool)
Transformer - 120-24 VAC, Grainger
4X744 or equivalent
Contactors - 30 amp, 2 pole, 24V coil,
Grainger # 1A638 or equivalent
Vent Fan Thermostat - Grainger # 2E340
or equivalent

PROPOSED D	PROPOSED M	PROPOSED Y	REVISIONS	D	C	COMPLETED D	COMPLETED M	COMPLETED Y	C
			PLAN REDRAWN			02	06	16	SJJ

REGION SOUTHERN
SUB. GILMAN 349

SIGNALS AND COMMUNICATIONS HOMEWOOD
16 APRIL 2004
DES. CBV
CH.

AC-DC POWER DISTRIBUTION

BRICKYARD INTLK

GIL-194.50-07

gil-194.50-07.dgn
21-JUL-2016

SIEMENS INDUSTRY INC

DES.: BEH	DATE: 02/06/16	JOB NO.: PICA10768	
CKD.: MRB	ISSUE DATE: N/A	EST. NO.: JXXE04429	
DRN.: BEH	PLAN NO.: N/A	SHEET 7 OF 18	
P TIME: 12:41	P DATE: 21-JUL-2016	CAD ID.: GIL-194.50-07	

SIEMENS INDUSTRY INC
LOUISVILLE DIVISION, LOUISVILLE, KY

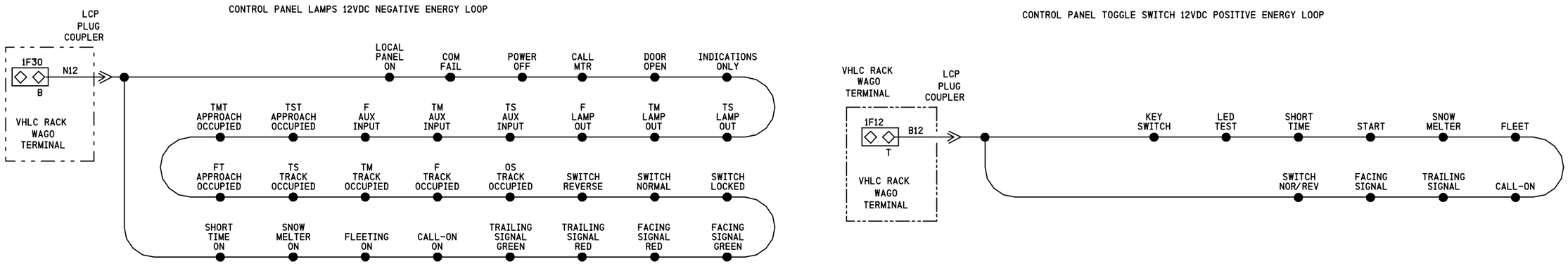

REVISIONS			
NO.	DATE	BY	DESCRIPTION	APP. BY
1				
2				
3				
4				
5				

SIEMENS INDUSTRY INC			
DES. : BEH	DATE: 02/06/16	JOB NO.: PICA10768	
CKD. : MRB	ISSUE DATE: N/A	EST. NO.: UXXE04429	
DRN. : BEH	PLAN NO.: N/A	SHEET 8 OF 18	
P TIME: 12:42	P DATE: 21-JUL-2016	CAD ID.: GIL-194.50-08	

gil-194.50-08.dgn
21-JUL-2016

PROPOSED D	M	Y	REVISIONS	D	C	COMPLETED D	M	Y	C
			PLAN REDRAWN			02	06	16	SJJ

REGION SOUTHERN
SUB. GILMAN 349

SIGNALS AND COMMUNICATIONS HOMEWOOD
16 APRIL 2004
DES. CBV
CH.

ENERGY LOOPS

BRICKYARD INTLK

GIL-194.50-08

SIEMENS INDUSTRY INC
LOUISVILLE DIVISION, LOUISVILLE, KY

REVISIONS				
NO.	DATE	BY	DESCRIPTION	APP. BY
1				
2				
3				
4				
5				

VHLC (FRONT VIEW)

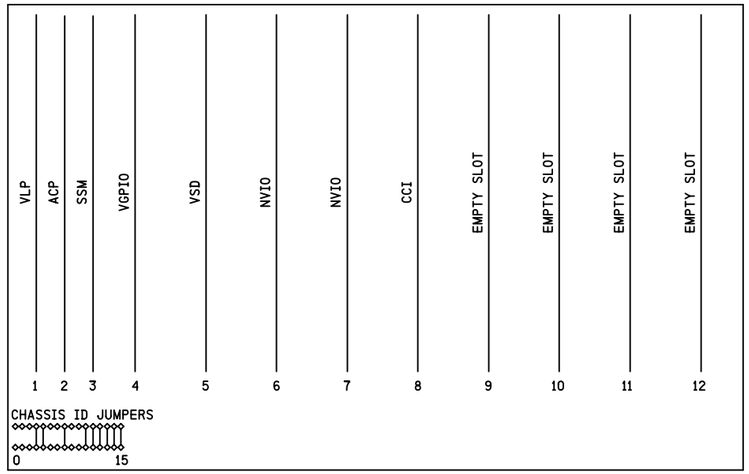

NOTE: COUNT FROM ZERO WHEN CUTTING CHASSIS ID

VHLC (REAR VIEW)

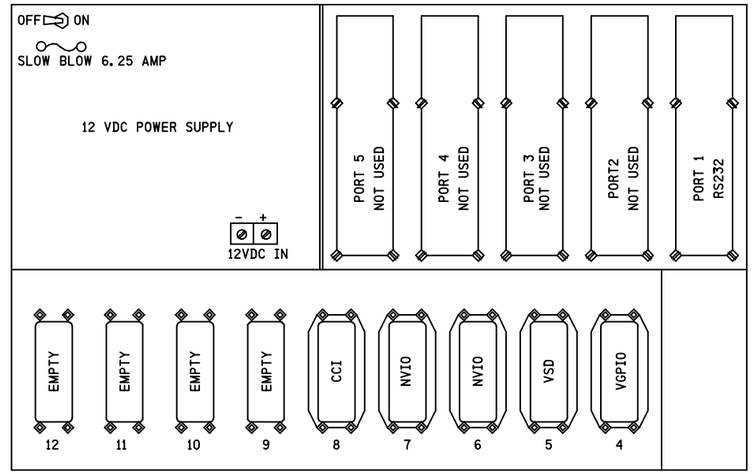

VHLC CABLE COLOR CODE

PIN	WIRE COLOR CODE
A	BLACK
B	WHITE
C	RED
D	GREEN
E	ORANGE
F	BLUE
H	WHITE/BLACK
J	RED/BLACK
K	GREEN/BLACK
L	ORANGE/BLACK
M	BLUE/BLACK
N	BLACK/WHITE
P	RED/WHITE
R	GREEN/WHITE
S	BLUE/WHITE
T	BLACK/RED
U	WHITE/RED
V	ORANGE/RED
W	BLUE/RED
X	RED/GREEN
Y	ORANGE/GREEN
Z	BLACK/WHITE/RED
a	WHITE/BLACK/RED
b	RED/BLACK/WHITE
c	GREEN/BLACK/WHITE

PLUG

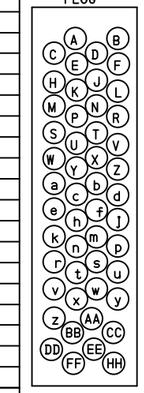

PIN	WIRE COLOR CODE
d	ORANGE/BLACK/WHITE
e	BLUE/BLACK/WHITE
f	BLACK/RED/GREEN
h	WHITE/RED/GREEN
j	RED/BLACK/GREEN
k	GREEN/BLACK/ORANGE
m	ORANGE/BLACK/GREEN
n	BLUE/WHITE/ORANGE
p	BLACK/WHITE/ORANGE
r	WHITE/RED/ORANGE
s	ORANGE/WHITE/BLUE
t	WHITE/RED/BLUE
u	BLACK/WHITE/GREEN
w	WHITE/BLACK/GREEN
v	RED/WHITE/GREEN
x	GREEN/WHITE/BLUE
y	ORANGE/RED/GREEN
z	BLUE/RED/GREEN
AA	BLACK/WHITE/BLUE
BB	WHITE/BLACK/BLUE
CC	RED/WHITE/BLUE
DD	GREEN/ORANGE/RED
EE	ORANGE/RED/BLUE
FF	BLUE/RED/ORANGE
HH	BLACK/ORANGE/RED

MODULE	DESCRIPTION	PART NUMBERS MODULE	PART NUMBERS CABLE	CONFIGURATION / USE
VGPIO	VITAL GENERAL PURPOSE I/O	227209-012	200124-110	8 BIPOLAR INPUTS - 8 BIPOLAR OUTPUTS
VGP16I	VITAL 16 INPUT CARD	226855-XXX	200661-XXX	16 BIPOLAR INPUTS
VGP8I	VITAL 8 INPUT CARD	226806-XXX	201931-XXX	8 BIPOLAR INPUTS
VSD	VITAL SIGNAL DRIVER	226801-000	200125-010	150 WATT CONTINUOUS LAMP OUTPUTS
CCI	CODED TRACK INTERFACE	226802-001	200123-001	2 TRACK CIRCUIT INTERFACE SYSTEMS (8 TRACKS)
NVIO	NON-VITAL I/O	226614-100	201775-110	16 INPUTS - 16 OUTPUTS
NV32I	NON-VITAL 32 INPUT	226856-XXX	200660-XXX	32 INPUTS
RS232	ISOLATED RS-232	226650-000	NONE	COMMUNICATIONS VIA RS-232 PROTOCOLS
MODEM	MODEM	226768-XXX	NONE	COMM VIA BELL SYSTEM 103, 202 OR 212 PROTOCOLS
VLP	VITAL LOGIC PROCESSOR	226610-100	NONE	VITAL LOGIC CONTROL
SSM	SITE SPECIFIC MODULE	226612-003	NONE	SITE SPECIFIC PROGRAM
ACP	AUXILIARY COMM PROCESSOR	226611-300	NONE	COMMUNICATIONS CONTROL
MEM	MEMORY EXPANSION MODULE	226908-000	NONE	SUPPLEMENTAL RAM FOR ACP CARD

CHASSIS ID 0367

NOTE: 4 JUMPERS = 1 CHASSIS ID DIGIT

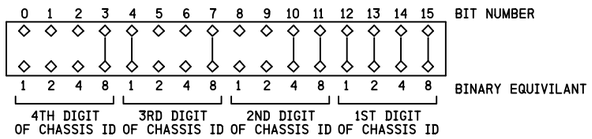

CHASSIS ID TO JUMPER CUT PATTERN CONVERSION TABLE

JUMPER CUT PATTERN (1 2 4 8)	0	1	2	3	4	5	6	7	8	9	A	B	C	D	E	F
ID DIGIT	0	1	2	3	4	5	6	7	8	9	A	B	C	D	E	F

PROPOSED D	PROPOSED M	PROPOSED Y	REVISIONS	D	C	COMPLETED D	COMPLETED M	COMPLETED Y	C
			PLAN REDRAWN			02	06	16	SJJ

REGION SOUTHERN

SUB. GILMAN 349

SIGNALS AND COMMUNICATIONS HOMEWOOD

16 APRIL 2004

DES. CBV

CH.

VHLC CABINET CONFIGURATION

BRICKYARD INTLK

GIL-194.50-09

SIEMENS INDUSTRY INC			
DES.: BEH	DATE: 02/06/16	JOB NO.: PICA10768	
CKD.: MRB	ISSUE DATE: N/A	EST. NO.: JXXE04429	
DRN.: BEH	PLAN NO.: N/A	SHEET 9 OF 18	
P TIME: 12:42	P DATE: 21-JUL-2016	CAD ID.: GIL-194.50-09	

SIEMENS INDUSTRY INC
LOUISVILLE DIVISION, LOUISVILLE, KY

gil-194.50-09.dgn
21-JUL-2016

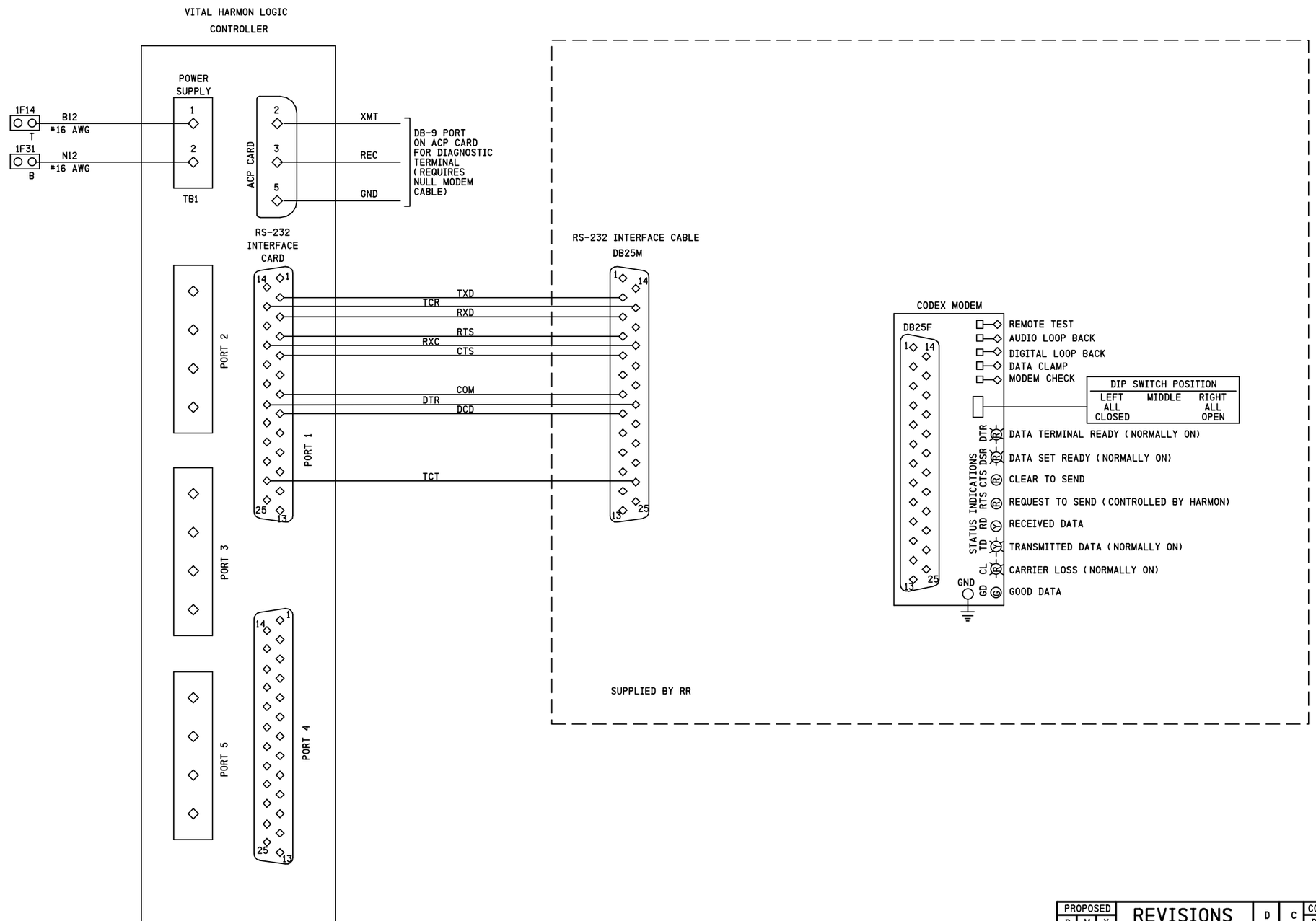

NOTES

1) ALL WIRING #22 AWG UNLESS OTHERWISE NOTED

REVISIONS				
NO.	DATE	BY	DESCRIPTION	APP. BY
1				
2				
3				
4				
5				

SIEMENS INDUSTRY INC			
DES.: BEH	DATE: 02/06/16	JOB NO.: PICA10768	
CKD.: MRB	ISSUE DATE: N/A	EST. NO.: JXXE04429	
DRN.: BEH	PLAN NO.: N/A	SHEET 10 OF 18	
P TIME: 12:42	P DATE: 21-JUL-2016	CAD ID.: GIL-194.50-10	

PROPOSED D	M	Y	REVISIONS	D	C	COMPLETED D	M	Y	C
			PLAN REDRAWN			02	06	16	SJJ

REGION SOUTHERN

SUB. GILMAN 349

SIGNALS AND COMMUNICATIONS HOMEWOOD

DES. CBV

CH.

16 APRIL 2004

VHLC INTERCONNECTIONS

BRICKYARD INTLK

GIL-194.50-10

gil-194.50-10.dgn
21-JUL-2016

SIEMENS INDUSTRY INC
LOUISVILLE DIVISION, LOUISVILLE, KY

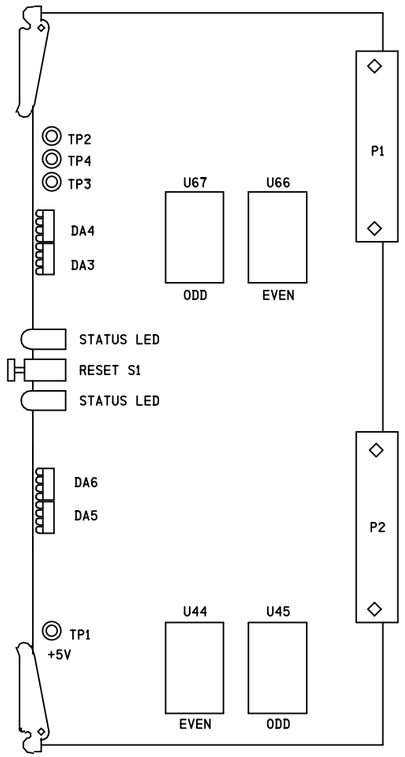

VITAL LOGIC PROCESSOR

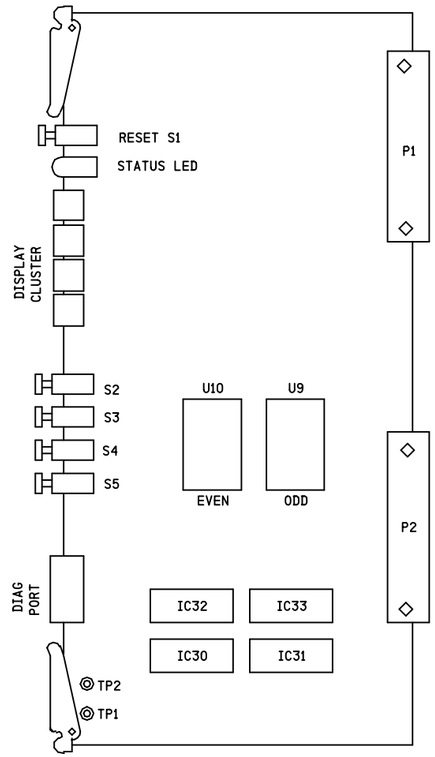

AUXILIARY COMMUNICATIONS PROCESSOR

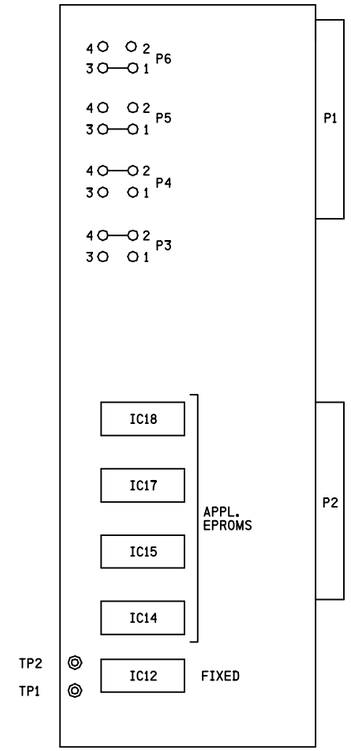

SITE SPECIFIC MODULE

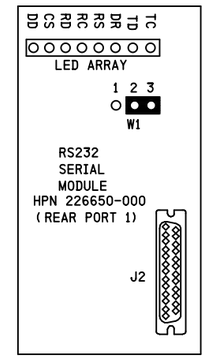

NOTE: JUMPER W1 ON RS-232 MODULE

PINS 1 & 2 = HLC PROVIDES CLOCK

PINS 2 & 3 = EXTERNAL DEVICE PROVIDES CLOCK

CONTROLS								
	1	2	3	4	5	6	7	8
WORD 1	NWZ	RWZ	FGZ	TGZ	FCOGZ	TCOGZ	SP	GSTOP
WORD 2	SM_ON	SM_OFF						

INDICATIONS								
	1	2	3	4	5	6	7	8
WORD 1	NWK	RWK	FGK	TGK	ASK	HI_TEMP	SMK	LK
WORD 2	OSTK	FAK	TMAK	TSAK	FLOK	TMLOK	TSLOK	SP
WORD 3	POK	LCK	DOK	SP	FBPK	TMBPK	TSBPK	SP
WORD 4							RTMK	RTTSK

SOFTWARE DATA TABLE

MODULE	EPROM	PROGRAM/VERSION	CKSUM	CRC	DATE
VLP	U44	VLP 1.13 ALT 5	2F1A	A7B3	
VLP	U45	VLP 1.13 ALT 5	4383	4896	
VLP	U66	VLP 1.13 ALT 5	F878	5483	
VLP	U67	VLP 1.13 ALT 5	3E8E	D67C	
ACP	IC30	ACP HP1 V1.4	1200		
ACP	IC31	ACP HP1 V1.4	B834		
ACP	IC32	ACP HP1 V1.4	D1F9		
ACP	IC33	ACP HP1 V1.4	D371		
ACP	U9				
ACP	U10				
SSM	IC14				
SSM	IC15				
SSM	1C16				
SSM	IC17				

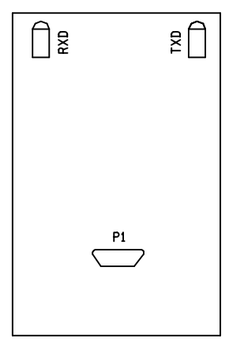

CLA

(REAR PORT 5)

(HPN 226859-000)

SITE SPECIFIC MODULE

EPROM TYPE JUMPER SELECTION

TYPE	P3	P4	P5	P6
27C64	1-3	1-3	1-3	1-3
27C128	1-3	1-3	1-3	1-3
27C256	2-4	1-3	1-3	1-3
27C512	2-4	2-4	1-3	1-3
27C010	2-4	2-4	2-4	1-3

TYPICAL INSTALLATION OF EPROM

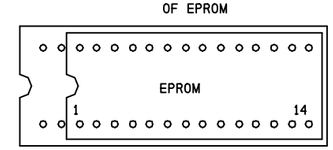

SOCKET

REVISIONS				
NO.	DATE	BY	DESCRIPTION	APP. BY
1				
2				
3				
4				
5				

PROPOSED			REVISIONS	D	C	COMPLETED			C
D	M	Y				D	M	Y	
			PLAN REDRAWN			02	06	16	SJJ

REGION SOUTHERN

SUB. GILMAN 349

SIGNALS AND COMMUNICATIONS HOMEWOOD

16 APRIL 2004

DES. CBV

CH.

VHLC SOFTWARE CONFIGURATION

BRICKYARD INTLK

GIL-194.50-11

SIEMENS INDUSTRY INC

DES.: BEH | DATE: 02/06/16 | JOB NO.: P1CA10768

CKD.: MRB | ISSUE DATE: N/A | EST. NO.: UXXE04429

DRN.: BEH | PLAN NO.: N/A | SHEET 11 OF 18

P TIME: 12:42 | P DATE: 21-JUL-2016 | CAD ID.: GIL-194.50-11

SIEMENS INDUSTRY INC
LOUISVILLE DIVISION, LOUISVILLE, KY

gil-194.50-11.dgn
21-JUL-2016

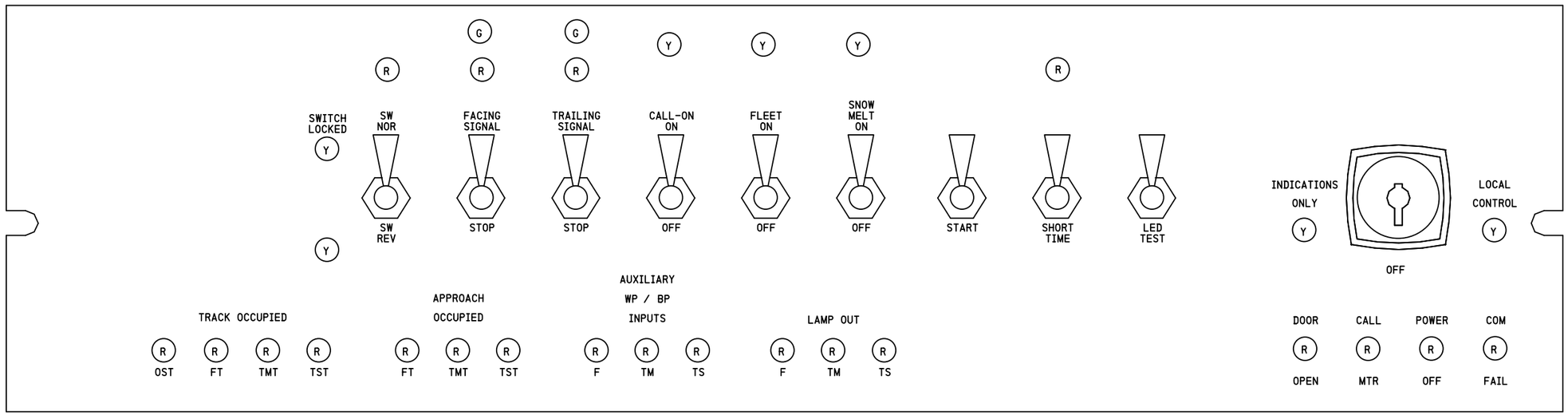

NOTES

1) ALL TOGGLE SWITCHES TO BE SPST EXCEPT "START", "SHORT TIME" & "LED TEST"
2) "START", "SHORT TIME" & "LED TEST" TOGGLE SWITCHES TO BE SPST N/O MOMENTARY
3) KEY SWITCH TO BE ON-OFF-ON, KEY REMOVABLE IN OFF POSITION ONLY
4) ALL LED'S TO BE 12 VDC, COLOR AS NOTED.
5) PANEL TO BE FLAT, REAR EXPOSED WIRING, TO FIT 19" RACK

REVISIONS			
NO.	DATE	BY	DESCRIPTION	APP. BY
1			
2			
3			
4			
5			

SIEMENS INDUSTRY INC	
DES. : BEH	DATE: 02/06/16	JOB NO. : PICA10768
CKD. : MRB	ISSUE DATE: N/A	EST. NO. : JXXE04429
DRN. : BEH	PLAN NO. : N/A	SHEET 12 OF 18
P. TIME: 12:42	P. DATE: 21-JUL-2016	CAD ID. : GIL-194.50-12

SIEMENS INDUSTRY INC
LOUISVILLE DIVISION, LOUISVILLE, KY

PROPOSED D	M	Y	REVISIONS	D	C	COMPLETED D	M	Y	C
			PLAN REDRAWN			02	06	16	SJJ

REGION SOUTHERN
SUB. GILMAN 349

SIGNALS AND COMMUNICATIONS HOMEWOOD
16 APRIL 2004
DES. CBV
CH.

LOCAL CONTROL PANEL

BRICKYARD INTLK

GIL-194.50-12

gil-194.50-12.dgn
21-JUL-2016

REVISIONS				
NO.	DATE	BY	DESCRIPTION	APP. BY
1				
2				
3				
4				
5				

gll-194.50-13.dgn
21-JUL-2016

RACK 1 - ROW A
Vital General Purpose I/O - HLC Slot 4 Terminations
WIRING TO APPLICATION EQUIPMENT & TERMINAL BOARD

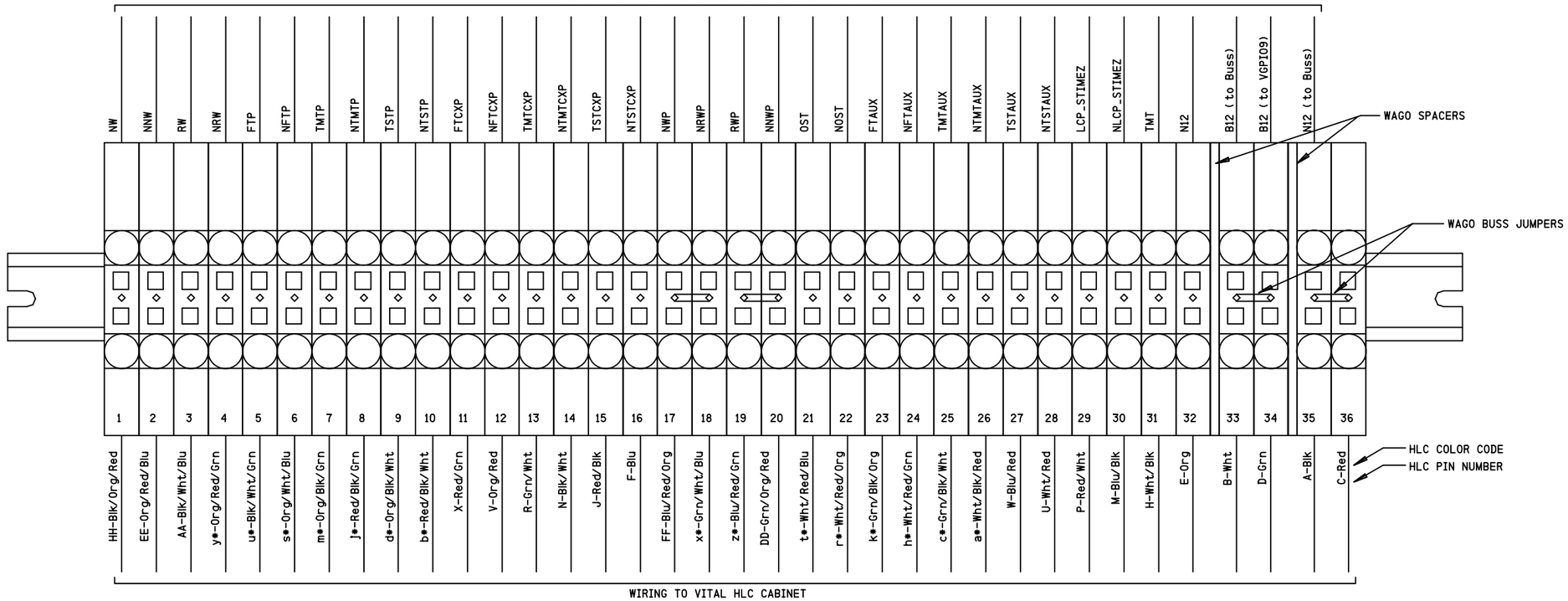

SIEMENS INDUSTRY INC			
DES.: BEH	DATE: 02/06/16	JOB NO.: PICA10768	
CKD.: MRB	ISSUE DATE: N/A	EST. NO.: JXXE04429	
DRN.: BEH	PLAN NO.: N/A	SHEET 13 OF 18	
P TIME: 12:42	P DATE: 21-JUL-2016	CAD ID.: GIL-194.50-13	

PROPOSED			REVISIONS	D	C	COMPLETED			C
D	M	Y				D	M	Y	
			PLAN REDRAWN			02	06	16	SJJ

REGION SOUTHERN
SUB. GILMAN 349

SIGNALS AND COMMUNICATIONS HOMEWOOD
16 APRIL 2004
DES. CBV
CH.

WAGO TERMINAL DETAILS
RACK 1 ROW A

BRICKYARD INTLK

GIL-194.50-13

SIEMENS INDUSTRY INC
LOUISVILLE DIVISION, LOUISVILLE, KY

REVISIONS				
NO.	DATE	BY	DESCRIPTION	APP. BY
1				
2				
3				
4				
5				

RACK 1 - ROW B
Vital Signal Driver - HLC SLOT 5 TERMINATIONS
WIRING TO APPLICATION EQUIPMENT & TERMINAL BOARD

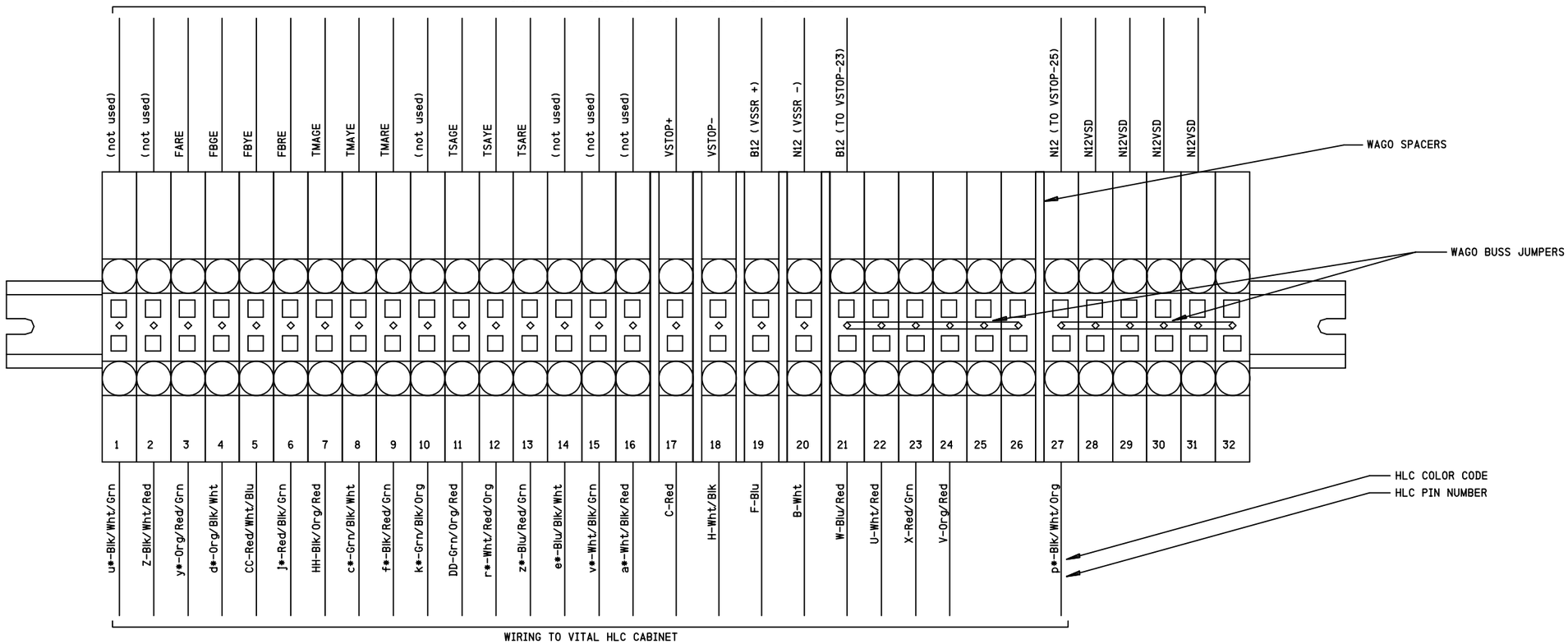

SIEMENS INDUSTRY INC			
DES.: BEH	DATE: 02/06/16	JOB NO.: PICA10768	
CKD.: MRB	ISSUE DATE: N/A	EST. NO.: JXXE04429	
DRN.: BEH	PLAN NO.: N/A	SHEET 14 OF 18	
P TIME: 12:42	P DATE: 21-JUL-2016	CAD ID.: GIL-194.50-14	

PROPOSED			REVISIONS	D	C	COMPLETED			C
D	M	Y				D	M	Y	
			PLAN REDRAWN			02	06	16	SJJ

REGION SOUTHERN
SUB. GILMAN 349

SIGNALS AND COMMUNICATIONS HOMEWOOD
16 APRIL 2004

DES. CBV
CH.

WAGO TERMINAL DETAILS
RACK 1 ROW B

BRICKYARD INTLK

GIL-194.50-14

gil-194.50-14.dgn
21-JUL-2016

SIEMENS INDUSTRY INC
LOUISVILLE DIVISION, LOUISVILLE, KY

RACK 1 - ROW C

RACK 1 - ROW C
Non-Vital I/O - HLC SLOT 6 Terminations
WIRING TO APPLICATION EQUIPMENT & TERMINAL BOARD

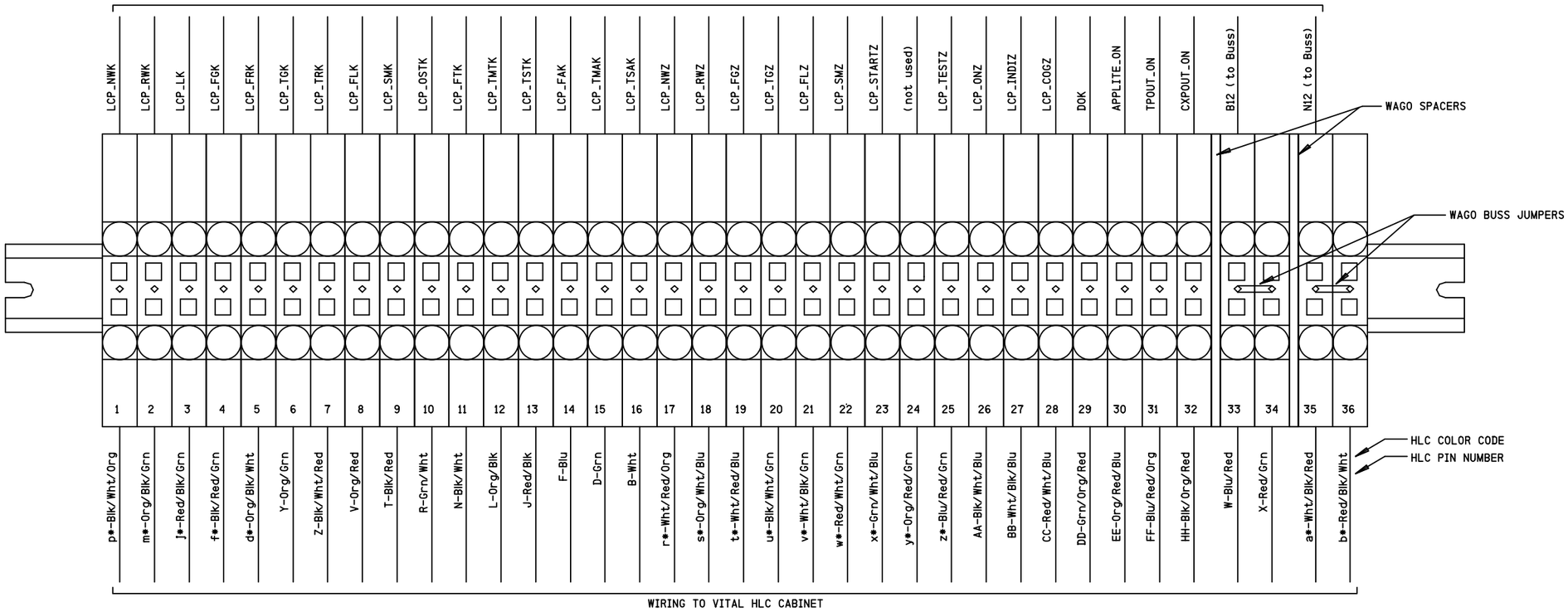

REVISIONS				
NO.	DATE	BY	DESCRIPTION	APP. BY
1				
2				
3				
4				
5				

gil-194.50-15.dgn
21-JUL-2016

SIEMENS INDUSTRY INC			
DES.: BEH	DATE: 02/06/16	JOB NO.: PICA10768	
CKD.: MRB	ISSUE DATE: N/A	EST. NO.: JXXE04429	
DRN.: BEH	PLAN NO.: N/A	SHEET 15 OF 18	
P TIME: 12:42	P DATE: 21-JUL-2016	CAD ID.: GIL-194.50-15	

PROPOSED			REVISIONS	D	C	COMPLETED			C
D	M	Y				D	M	Y	
			PLAN REDRAWN			02	06	16	SJJ

REGION SOUTHERN
SUB. GILMAN 349

SIGNALS AND COMMUNICATIONS HOMEWOOD
16 APRIL 2004

DES. CBV
CH.

WAGO TERMINAL DETAILS
RACK 1 ROW C

BRICKYARD INTLK

GIL-194.50-15

SIEMENS INDUSTRY INC
LOUISVILLE DIVISION, LOUISVILLE, KY

RACK 1 - ROW D

RACK 1 - ROW D
Non-Vital I/O - HLC SLOT 7 Terminations
WIRING TO APPLICATION EQUIPMENT & TERMINAL BOARD

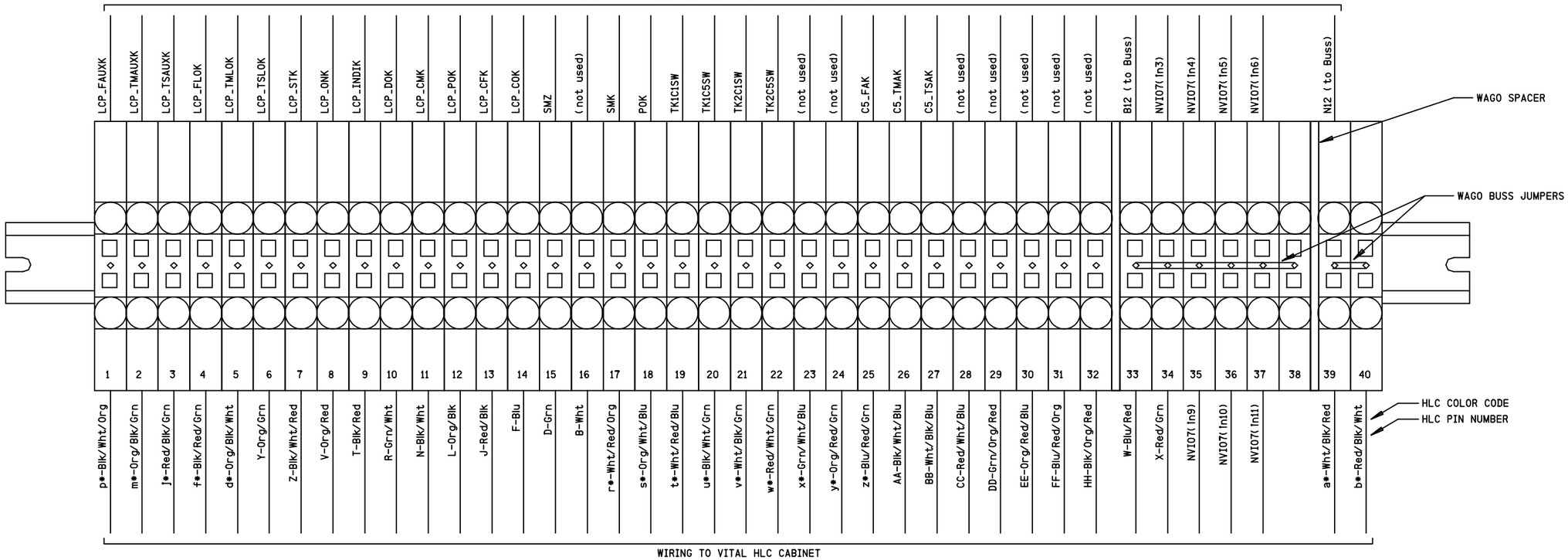

Terminal	Wire	Terminal	Wire
1	LCP_FAUXK	1	p*-Blk/Wht/Org
2	LCP_TMAUXK	2	m*-Org/Blk/Grn
3	LCP_TSAUXK	3	j*-Red/Blk/Grn
4	LCP_FLOK	4	f*-Blk/Red/Grn
5	LCP_TMLOK	5	d*-Org/Blk/Wht
6	LCP_TSLOK	6	Y-Org/Grn
7	LCP_STK	7	Z-Blk/Wht/Red
8	LCP_ONK	8	V-Org/Red
9	LCP_INDIK	9	T-Blk/Red
10	LCP_DOK	10	R-Grn/Wht
11	LCP_CMK	11	N-Blk/Wht
12	LCP_POK	12	L-Org/Blk
13	LCP_CFK	13	J-Red/Blk
14	LCP_COK	14	F-Blu
15	SMZ	15	D-Grn
16	(not used)	16	B-Wht
17	SMK	17	r*-Wht/Red/Org
18	POK	18	s*-Org/Wht/Blu
19	TK1C1SW	19	t*-Wht/Red/Blu
20	TK1C5SW	20	u*-Blk/Wht/Grn
21	TK2C1SW	21	v*-Wht/Blk/Grn
22	TK2C5SW	22	w*-Red/Wht/Grn
23	(not used)	23	x*-Grn/Wht/Blu
24	(not used)	24	y*-Org/Red/Grn
25	C5_FAK	25	z*-Blu/Red/Grn
26	C5_TMAK	26	AA-Blk/Wht/Blu
27	C5_TSAK	27	BB-Wht/Blk/Blu
28	(not used)	28	CC-Red/Wht/Blu
29	(not used)	29	DD-Grn/Org/Red
30	(not used)	30	EE-Org/Red/Blu
31	(not used)	31	FF-Blu/Red/Org
32	(not used)	32	HH-Blk/Org/Red
33	B12 (to Buss)	33	W-Blu/Red
34	NVIO7(In3)	34	X-Red/Grn
35	NVIO7(In4)	35	NVIO7(In9)
36	NVIO7(In5)	36	NVIO7(In10)
37	NVIO7(In6)	37	NVIO7(In11)
38		38	
39	N12 (to Buss)	39	a*-Wht/Blk/Red
40		40	b*-Red/Blk/Wht

REVISIONS			
NO.	DATE	BY	DESCRIPTION
1			
2			
3			
4			
5			

SIEMENS INDUSTRY INC			
DES.: BEH	DATE: 02/06/16	JOB NO.: PICA10768	
CKD.: MRB	ISSUE DATE: N/A	EST. NO.: JXXE04429	
DRN.: BEH	PLAN NO.: N/A	SHEET 16 OF 18	
P TIME: 12:43	P DATE: 21-JUL-2016	CAD ID.: GIL-194.50-16	

PROPOSED D	M	Y	REVISIONS	D	C	COMPLETED D	M	Y	C
			PLAN REDRAWN			02	06	16	SJJ

REGION SOUTHERN
SUB. GILMAN 349

SIGNALS AND COMMUNICATIONS HOMEWOOD
16 APRIL 2004
DES. CBV
CH.

WAGO TERMINAL DETAILS
RACK 1 ROW D

BRICKYARD INTLK

GIL-194.50-16

gil-194.50-16.dgn
21-JUL-2016

SIEMENS INDUSTRY INC
LOUISVILLE DIVISION, LOUISVILLE, KY

REVISIONS				
NO.	DATE	BY	DESCRIPTION	APP. BY
1				
2				
3				
4				
5				

RACK 1 - ROW F

B12, N12, B24 & N24 BUSSES

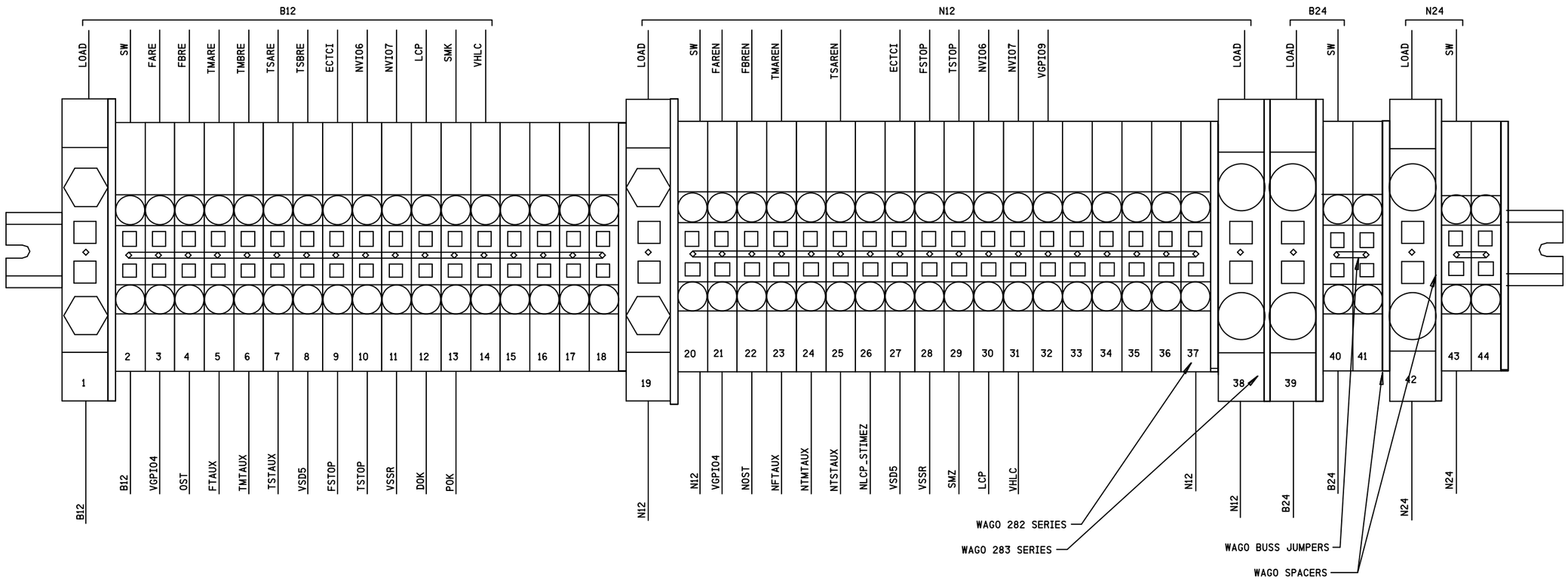

PROPOSED			REVISIONS	D	C	COMPLETED			C
D	M	Y				D	M	Y	
			PLAN REDRAWN			02	06	16	SJJ

REGION SOUTHERN

SUB. GILMAN 349

SIGNALS AND COMMUNICATIONS HOMEWOOD

16 APRIL 2004

DES. CBV

CH.

WAGO TERMINAL DETAILS
RACK 1 ROW F

BRICKYARD INTLK

GIL-194.50-17

SIEMENS INDUSTRY INC	
DES.: BEH	DATE: 02/06/16
CKD.: MRB	ISSUE DATE: N/A
DRN.: BEH	PLAN NO.: N/A
P TIME: 12:43	P DATE: 21-JUL-2016
JOB NO.: P1CA10768	
EST. NO.: UXXE04429	
SHEET 17 OF 18	
CAD ID.: GIL-194.50-17	

SIEMENS INDUSTRY INC
LOUISVILLE DIVISION, LOUISVILLE, KY

gil-194.50-17.dgn
21-JUL-2016

REVISIONS				
NO.	DATE	BY	DESCRIPTION	APP. BY
1				
2				
3				
4				
5				

RESISTOR PANEL RACK 2 ROW F

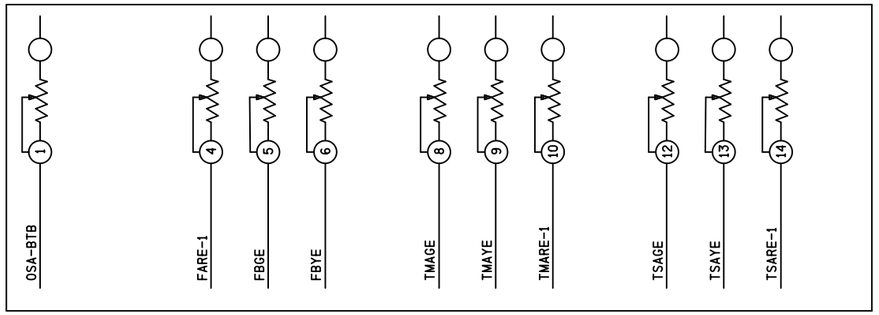

19" X 7"

TERMINAL BOARD RACK 3 ROW B

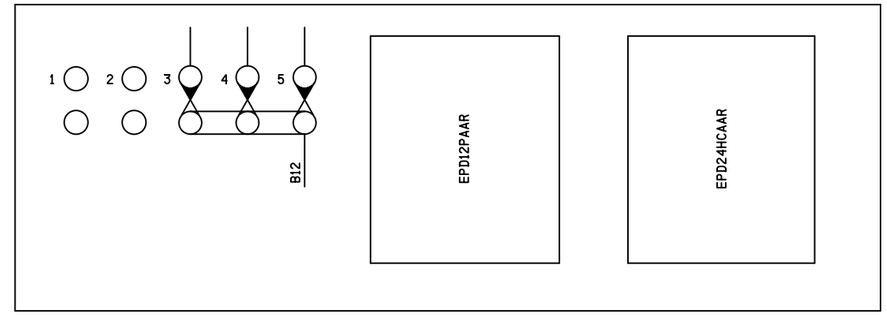

19" X 7"

FUSE PANEL RACK 2 ROW G

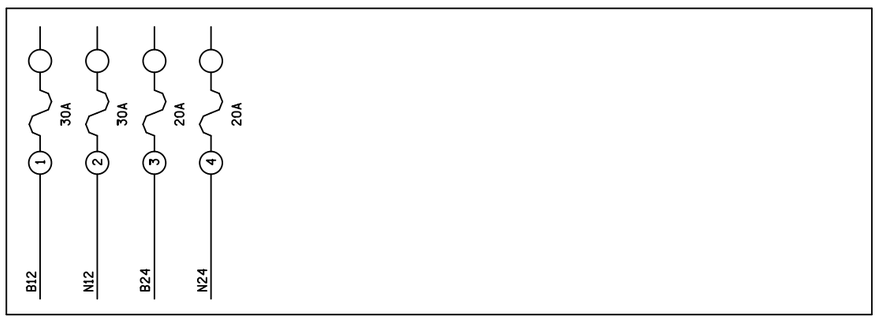

19" X 7"

NOTES

1) = TESTLINK - GOLD NUT ON FILLED SIDE

SIEMENS INDUSTRY INC	
DES.: BEH	DATE: 02/06/16
CKD.: MRB	ISSUE DATE: N/A
DRN.: BEH	PLAN NO.: N/A
P TIME: 12:43	P DATE: 21-JUL-2016
	JOB NO.: PICA10768
	EST. NO.: JXXE04429
	SHEET 18 OF 18
	CAD ID.: GIL-194.50-18

PROPOSED D	M	Y	REVISIONS	D	C	COMPLETED D	M	Y	C
			PLAN REDRAWN			02	06	16	SJJ

REGION SOUTHERN

SUB. GILMAN 349

SIGNALS AND COMMUNICATIONS HOMEWOOD

DES. CBV

16 APRIL 2004

CH.

RACK 2 PANELS & RACK 3 TERMINAL BOARD DETAILS

BRICKYARD INTLK

GIL-194.50-18

18

SIEMENS INDUSTRY INC
LOUISVILLE DIVISION, LOUISVILLE, KY

gil-194.50-18.dgn
21-JUL-2016