TO LENOX

TO VILLA GROVE

PRIME WARNING TIME = 25 SECONDS

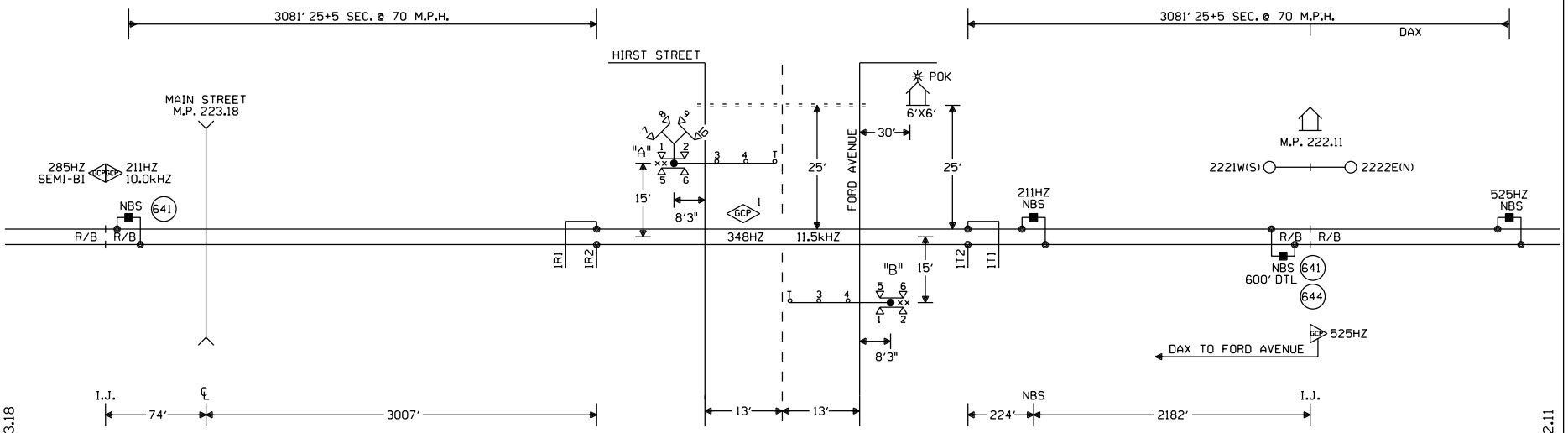

CONNECTS TO M.P. 223.18

CONNECTS TO M.P. 222.11

NOTES:

⊗ = TWISTED WIRES
INSULATED 1 TWIST PER FT.
ALL TRACK WIRES 2C. #6

TRANSMITTER AND RECEIVER LEADS
TO BE SEPARATED BY AT LEAST 12" IN TRENCH.
LENGTHS SHOULD NOT EXCEED MANUFACTURES
RECOMMENDATION.

TOP OF FOUNDATION TO BE AT SAME ELEVATION
AS THE SURFACE OF THE TRAVELED WAY & NO
MORE THAN 4" ABOVE THE SURFACE OF THE GROUND.

ALL BUNGALOW WIRING TO BE #16 AWG FLEX
UNLESS OTHERWISE SPECIFIED EXCEPT ALL GROUND
WIRE TO BE #6 AWG FLEX OR LARGER.

ALL WIRING IN GATE MECHANISM TO BE #10 "AWG FLEX".

REFER TO UP STANDARD DWG FOR BUNGALOW GROUNDING.

PORTABLE GENERATOR EXTENSION CORD
FOR 240V TO 240V IS PROVIDED AS WELL
AS A 120V TO 240V ADAPTER.

ALL LIGHTS TO BE 12" ROUNDELS.

= = = = = = 4" X 50' CONDUIT

LIGHTS: LED LIGHTS

GATE A: 21'
GATE B: 21'

×× = BELL

TRK 1 ISLAND DISTANCE 126' MINIMUM 120' REQUIRED

PREFERRED ISLAND WIRE CONNECTIONS
ARE A MINIMUM 50' FROM EDGE OF ROAD

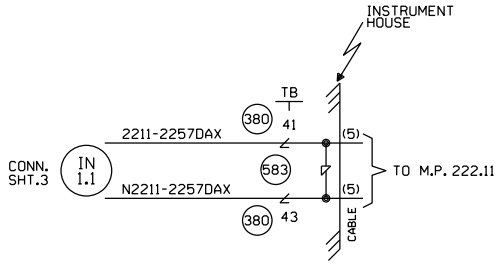

CONSTRUCTION NOTES:

1. CABIN PLACEMENT TO BE VERIFIED BY ICC PERSONNEL.
2. THIS IS PART OF A CORRIDOR PROJECT TO BE INSTALLED IN CONJUNCTION WITH W.O.#27884.
3. REMOVE TJC'S AT M.P. 222.11 AS PART OF THIS PROJECT.
4. AS PART OF THIS PROJECT, EC-4 BOX FROM EXISTING M.P. 222.10 CASE TO BE REUSED IN NEW 6'X6' REMOTE/INTERMEDIATE HOUSE AND EXISTING M.P. 222.10 CASE TO BE REMOVED.

OFFSET AND ISLAND DISTANCES
TO BE VERIFIED BY FIELD

W(S) ← → E(N)

CABLE TABULATION

CABLE NO. 5 7C NO.14 U.G.B.T. HOUSE TO M.P. 222.11

NEW SHEET

Designed: 02/19/15
INSTALL GATES, FLASHERS AND CWT AT FORD AVENUE, M.P. 222.57
Rec'd 15:
WO#:27885 AND NST/JTB

MODIFICATION LEVEL	
D. A. LAST LEVEL CHECKED	DU
LAST LEVEL MOD THIS TYPICAL	DU
LAST LEVEL BY DESIGNER	DU
CHANGED FROM TYPICAL?	Y

rev 01.24.11 4K 1TKBG.1

CIRCUIT MODIFICATIONS ARE NOT TO BE MADE WITHOUT AUTHORITY FROM THE OFFICE OF SIGNAL DESIGN

Date: 02/19/15
Des: NST
Chk: NBT
AFE: 27885

UNION PACIFIC RAILROAD
WITT, ILLINOIS
FORD AVENUE
PANA SUBDIVISION
Office of AVP Engineering - Signal Omaha, Nebraska

Sh.: 1
DOT 542151L
MP: 222.57
ID: 030222257.IX

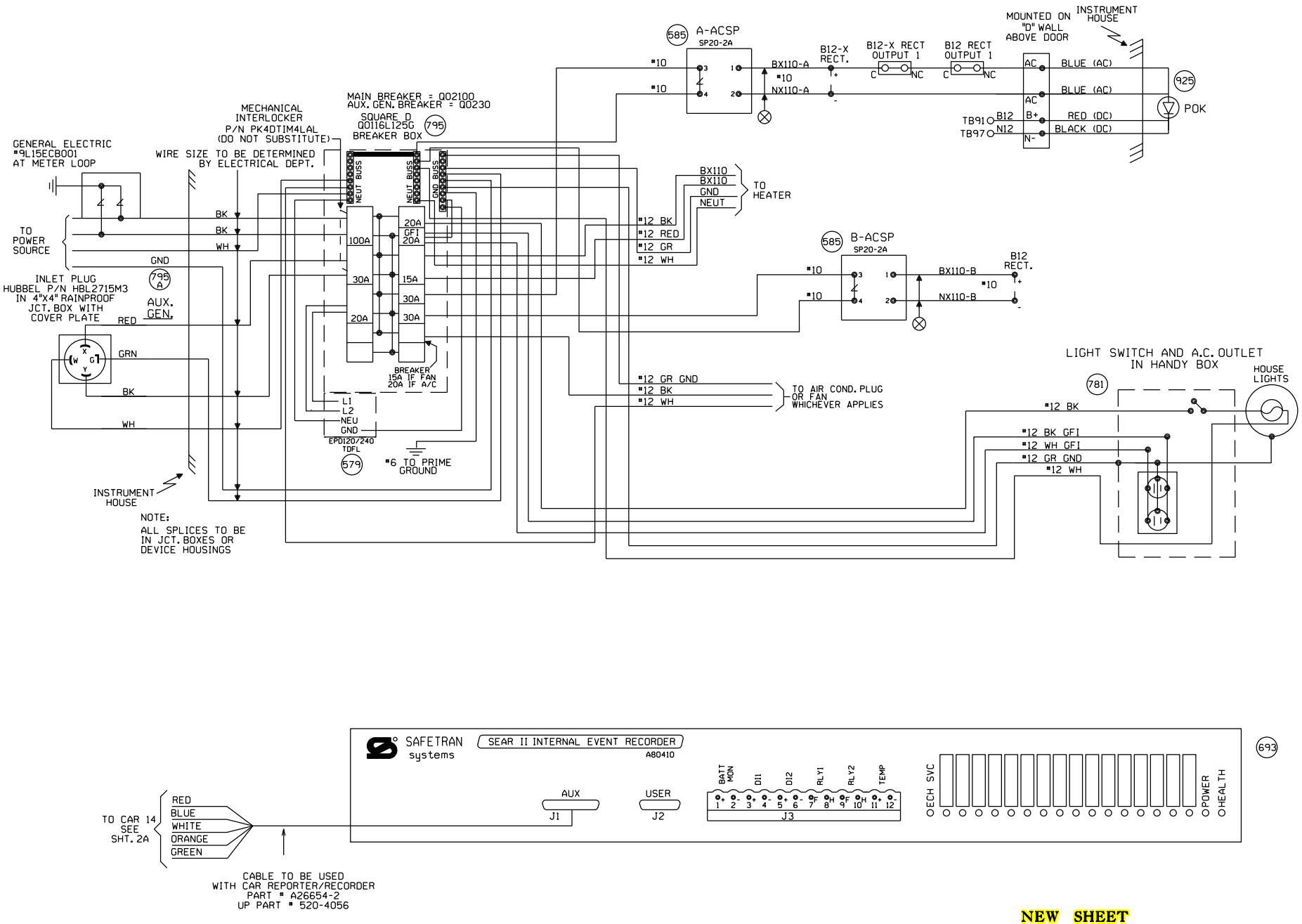

NEW SHEET

Designed: 02/19/15 INSTALL GATES, FLASHERS AND CWT AT FORD AVENUE, M.P. 222.57 Rec#: IS: WO#: 27885 /NDR /NST/JTB	MODIFICATION LEVEL		CIRCUIT MODIFICATIONS ARE NOT TO BE MADE WITHOUT AUTHORITY FROM THE OFFICE OF SIGNAL DESIGN	Date: 02/19/15	UNION PACIFIC RAILROAD	Sh.: 2
	Q.A. LAST LEVEL CHECKED	DU		Des: NST	WITT, ILLINOIS	DOT 542151L
	LAST LEVEL MOD THIS TYPICAL	DU		Chk: NDR	FORD AVENUE	MP: 222.57
	LAST LEVEL BY DESIGNER	DU		AFE: 27885	PANA SUBDIVISION	ID: 030222257.2X
	CHANGED FROM TYPICAL?	Y			Office of AVP Engineering - Signal Omaha, Nebraska	
	REV 01.24.11 4K SEARAC.2					

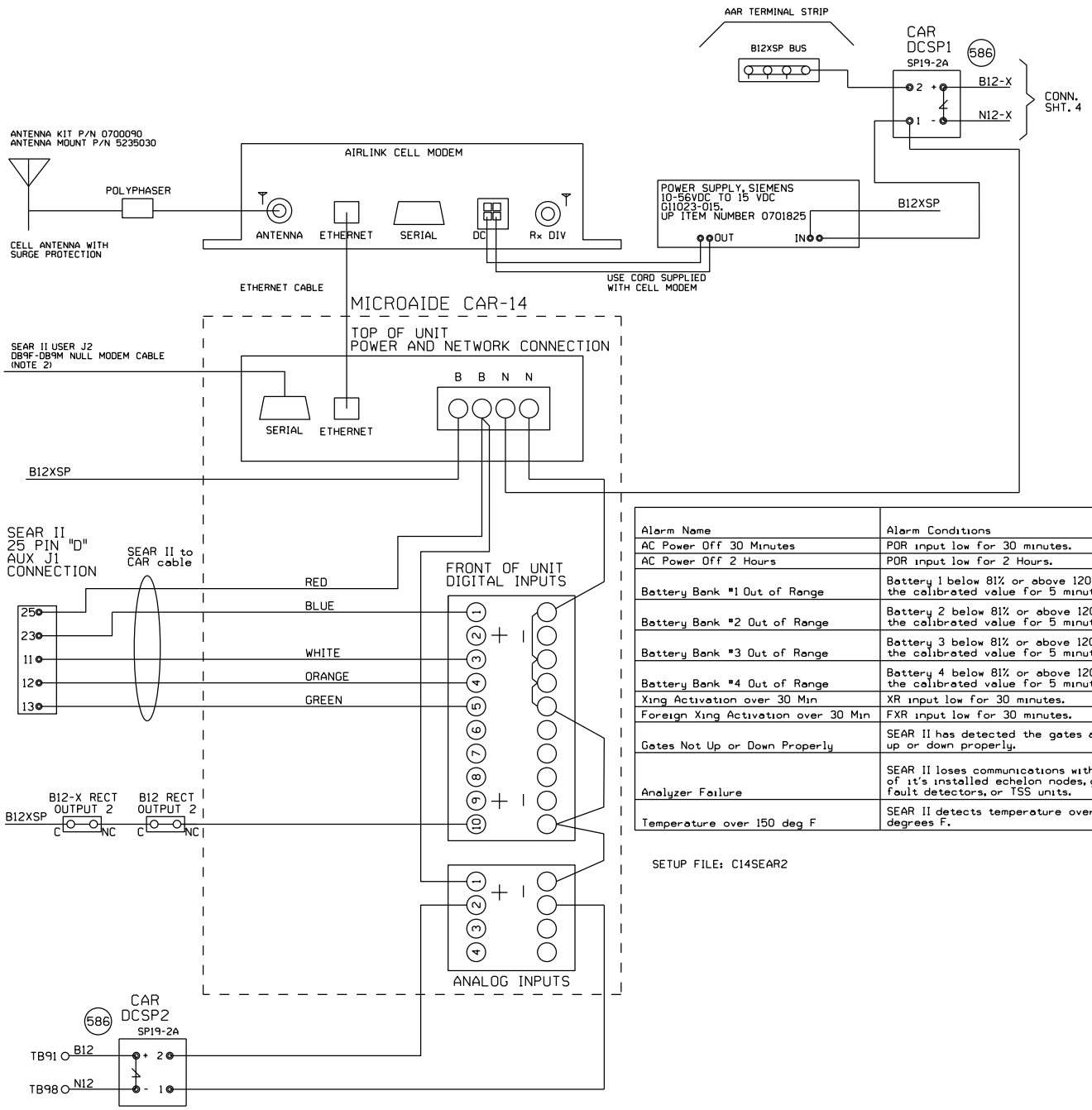

NOTE:
1) DO NOT JUMPER UNUSED INPUTS
2) THE CAR14 SERIAL PORT IS AVAILABLE TO ADD REMOTE CONNECTIVITY TO EXISTING LOGGING EQUIPMENT. USE NULL MODEM CABLE WITH SHIELDING DISCONNECTED AT ONE OR BOTH SIDES.

ANALOG INPUTS:
A1) B12X BATTERY BANK
A2) B12 BATTERY BANK
A3) BATTERY BANK 3
A4) BATTERY BANK 4

DIGITAL INPUTS
D1) XR (BLUE WIRE)
D2) FOREIGN XR
D3) ANALYZER FAILURE (WHITE WIRE)
D4) HIGH TEMPERATURE (ORANGE WIRE)
D5) GATES NOT UP OR DOWN PROPERLY (GREEN WIRE)
D10) POWER OFF INDICATION

Alarm Name	Alarm Conditions	Alarm Clearing Conditions	Cleared by Maintainer Mode?
AC Power Off 30 Minutes	POR input low for 30 minutes.	POR input high for 5 minutes.	No
AC Power Off 2 Hours	POR input low for 2 Hours.	POR input high for 5 minutes.	No
Battery Bank #1 Out of Range	Battery 1 below 81% or above 120% of the calibrated value for 5 minutes.	Battery 1 within acceptable range for 5 minutes.	No
Battery Bank #2 Out of Range	Battery 2 below 81% or above 120% of the calibrated value for 5 minutes.	Battery 2 within acceptable range for 5 minutes.	No
Battery Bank #3 Out of Range	Battery 3 below 81% or above 120% of the calibrated value for 5 minutes.	Battery 3 within acceptable range for 5 minutes.	No
Battery Bank #4 Out of Range	Battery 4 below 81% or above 120% of the calibrated value for 5 minutes.	Battery 4 within acceptable range for 5 minutes.	No
Xing Activation over 30 Min	XR input low for 30 minutes.	XR input high for 10 seconds.	Yes
Foreign Xing Activation over 30 Min	FXR input low for 30 minutes.	FXR input high for 10 seconds.	Yes
Gates Not Up or Down Properly	SEAR II has detected the gates are not up or down properly.	SEAR II has detected the gates are up or down properly.	No
Analyzer Failure	SEAR II loses communications with any of it's installed echelon nodes, ground fault detectors, or TSS units.	SEAR II has recovered after an analyzer failure alarm.	No
Temperature over 150 deg F	SEAR II detects temperature over 150 degrees F.	SEAR II sensor detects temperature is OK after a High-Temp alarm.	No

SETUP FILE: C14SEAR2

NEW SHEET

Designed: 02/19/15
INSTALL GATES, FLASHERS AND CWT AT FORD AVENUE, M.P. 222.57
Rec#: WO#: 27885
IS: /NDR
/NST/JTB

MODIFICATION LEVEL	
Q.A. LAST LEVEL CHECKED	DU
LAST LEVEL MOD THIS TYPICAL	DU
LAST LEVEL BY DESIGNER	DU
CHANGED FROM TYPICAL?	Y

REV 01.24.11 4K ACDCCAR14SI1.3

CIRCUIT MODIFICATIONS ARE NOT TO BE MADE WITHOUT AUTHORITY FROM THE OFFICE OF SIGNAL DESIGN

Date: 02/19/15
Des: NST
Chk: NDR
AFE: 27885

UNION PACIFIC RAILROAD
WITT, ILLINOIS
FORD AVENUE
PANA SUBDIVISION
Office of AVP Engineering - Signal Omaha, Nebraska

Sh.: 2A
DOT 542151L
MP: 222.57
ID: 030222257.2AX

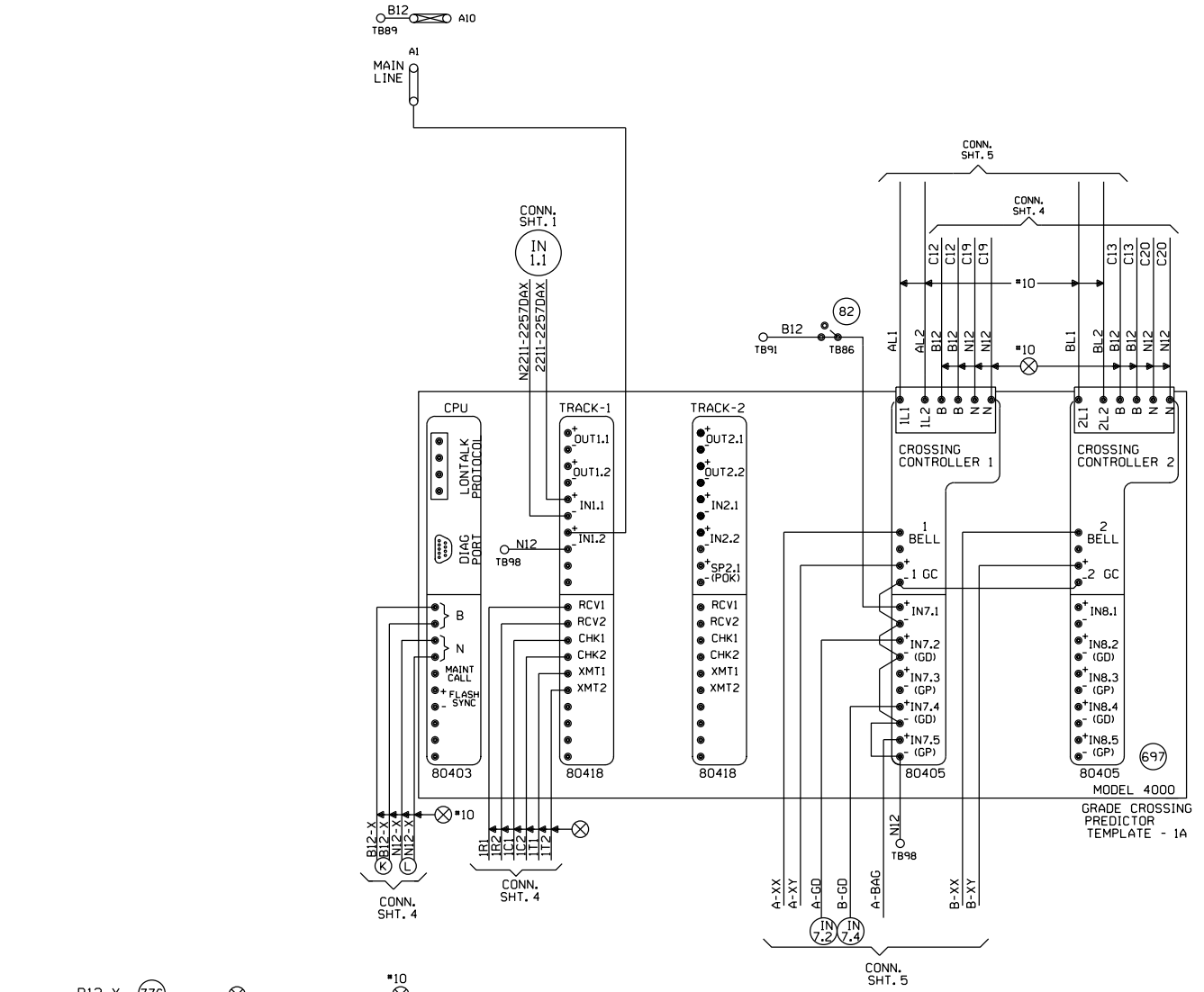

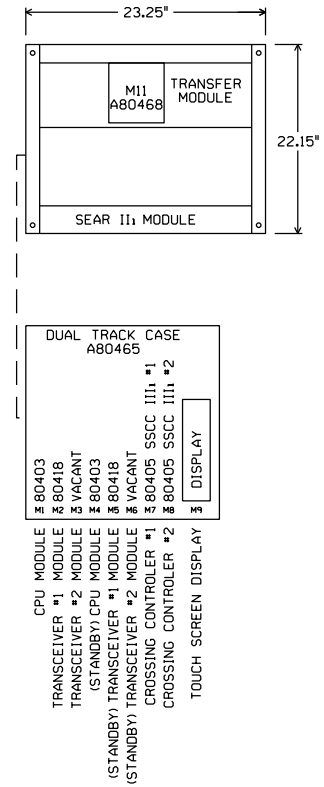

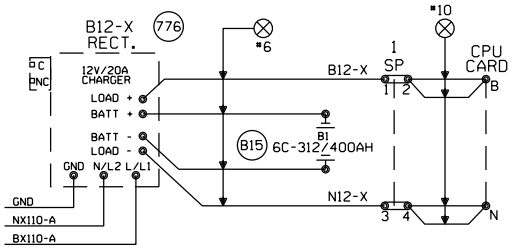

"Mf" FREQUENCY (HZ)	MAXIMUM TRANSMIT WIRE LENGTH (FEET)
86	100
114	125
156	150
211	200
285-970	250

NOTE:
EACH TRANSMITTER TO RAIL WIRE FROM XMT1 AND XMT2 MUST NOT EXCEED THE MAXIMUM LENGTH SPECIFIED IN THE TABLE SHOWN. THE RECEIVER WIRE LENGTH IS NOT CRITICAL. DOES NOT APPLY TO 6 TRACK WIRE APPLICATION.

NEW SHEET

Designed: 02/19/15
INSTALL GATES, FLASHERS AND CWT AT FORD AVENUE, M.P. 222.57
Rec'd: 15:
WO#: 27885 /NDR /NST/JTB

MODIFICATION LEVEL	
D. A. LAST LEVEL CHECKED	DU
LAST LEVEL MOD THIS TYPICAL	DU
LAST LEVEL BY DESIGNER	DU
CHANGED FROM TYPICAL?	Y

REV 01.24.11 4K 2TKGF.3

CIRCUIT MODIFICATIONS ARE NOT TO BE MADE WITHOUT AUTHORITY FROM THE OFFICE OF SIGNAL DESIGN

Date: 02/19/15
Des: NST
Chk: NDR
AFE: 27885

UNION PACIFIC RAILROAD
WITT, ILLINOIS
FORD AVENUE
PANA SUBDIVISION
Office of AVP Engineering - Signal Omaha, Nebraska

Sh.: 3
DOT 542151L
MP: 222.57
ID: 030222257.3X

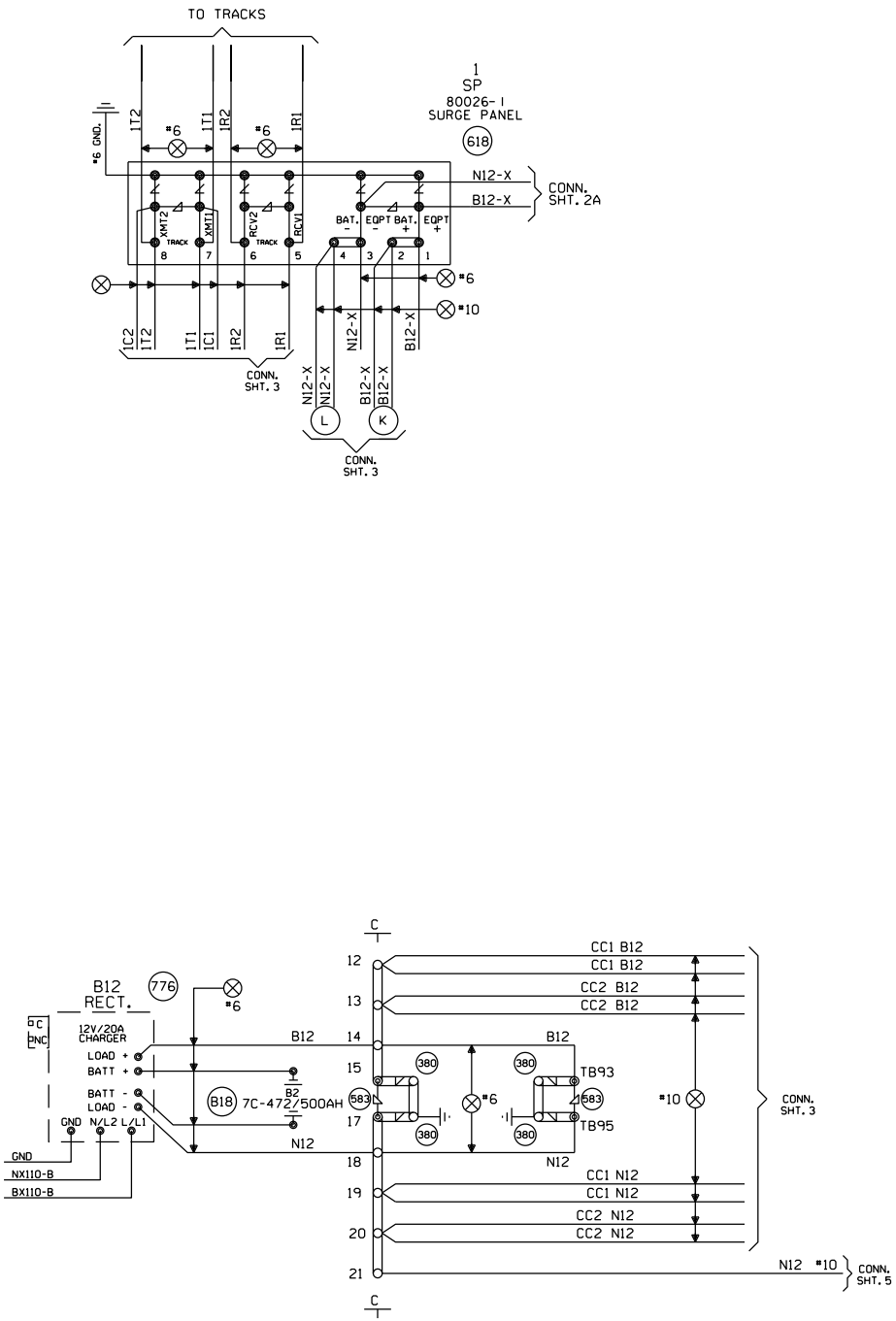

NEW SHEET

Designed: 02/19/15 INSTALL GATES, FLASHERS AND CWT AT FORD AVENUE, M.P. 222.57 Rec#: WO#: 27885 IS: /NDR /NST/JTB	MODIFICATION LEVEL		CIRCUIT MODIFICATIONS ARE NOT TO BE MADE WITHOUT AUTHORITY FROM THE OFFICE OF SIGNAL DESIGN	Date: 02/19/15 Des: NST Chk: NDR AFE: 27885	UNION PACIFIC RAILROAD WITT, ILLINOIS FORD AVENUE PANA SUBDIVISION Office of AVP Engineering - Signal Omaha, Nebraska	Sh.: 4 DOT 542151L MP: 222.57 ID: 030222257.4X
	O. A. LAST LEVEL CHECKED	DU				
	LAST LEVEL MOD THIS TYPICAL	DU				
	LAST LEVEL BY DESIGNER	DU				
	CHANGED FROM TYPICAL?	Y				
	REV 01.24.11 4K 4TKSPGFC.4					

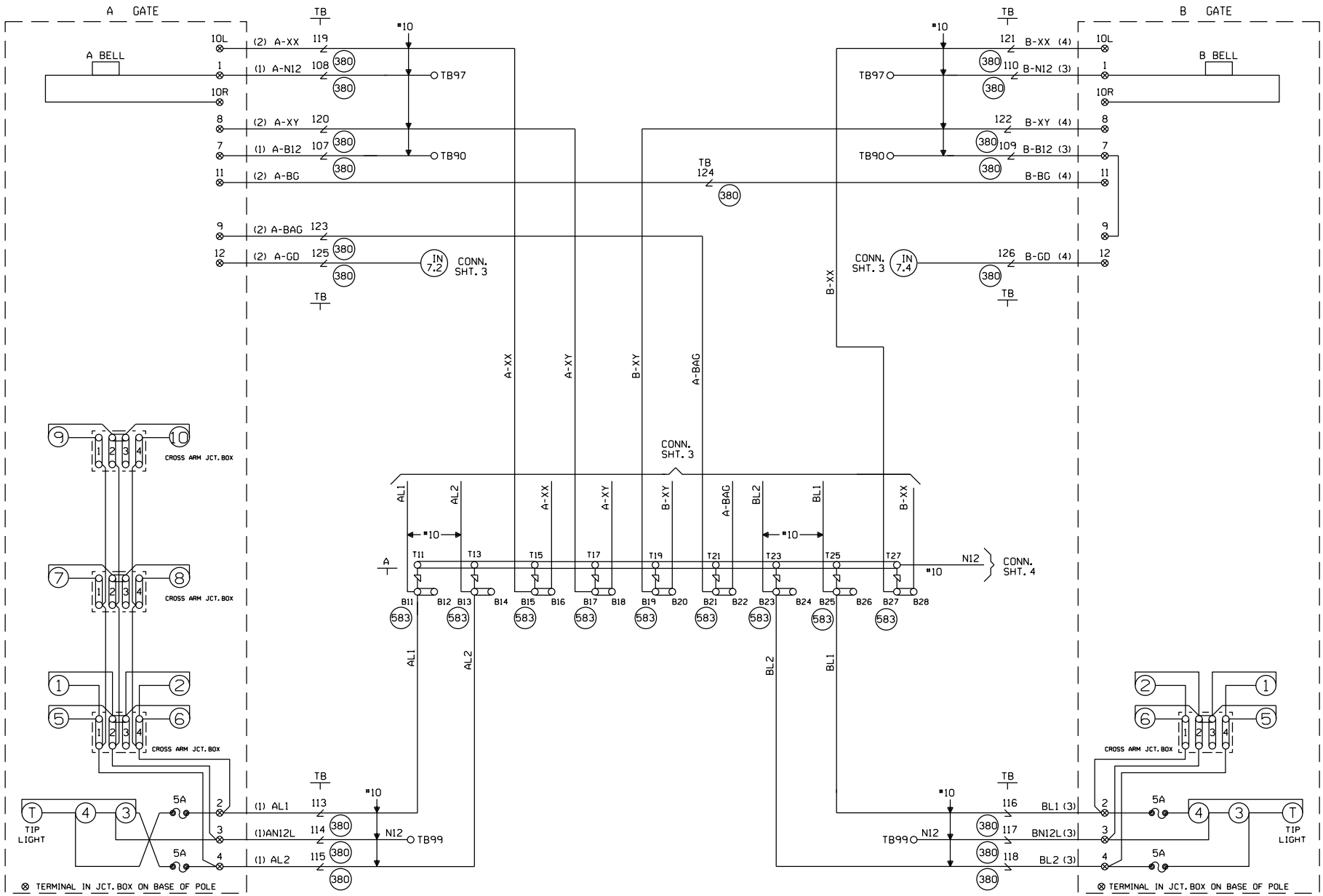

CABLE TABULATION

CABLE NO. 1 5C. NO.6 U.G.B.T. TO GATE A
CABLE NO. 2 7C. NO.14 U.G.B.T. TO GATE A
CABLE NO. 3 5C. NO.6 U.G.B.T. TO GATE B
CABLE NO. 4 7C. NO.14 U.G.B.T. TO GATE B

NEW SHEET

Designed: 02/19/15
INSTALL GATES, FLASHERS AND CWT AT FORD AVENUE, M.P. 222.57
Rec#: WO#: 27885
IS: /NDR /NST/JTB

MODIFICATION LEVEL	
O. A. LAST LEVEL CHECKED	DU
LAST LEVEL MOD THIS TYPICAL	DU
LAST LEVEL BY DESIGNER	DU
CHANGED FROM TYPICAL?	Y

REV 01.24.11 4K GFSLTYP.5

CIRCUIT MODIFICATIONS ARE NOT TO BE MADE WITHOUT AUTHORITY FROM THE OFFICE OF SIGNAL DESIGN

Date: 02/19/15
Des: NST
Chk: NDR
AFE: 27885

UNION PACIFIC RAILROAD
WITT, ILLINOIS
FORD AVENUE
PANA SUBDIVISION
Office of AVP Engineering - Signal Omaha, Nebraska

Sh.: 5
DOT 542151L
MP: 222.57
ID: 030222257.5X

WCH 3593-E

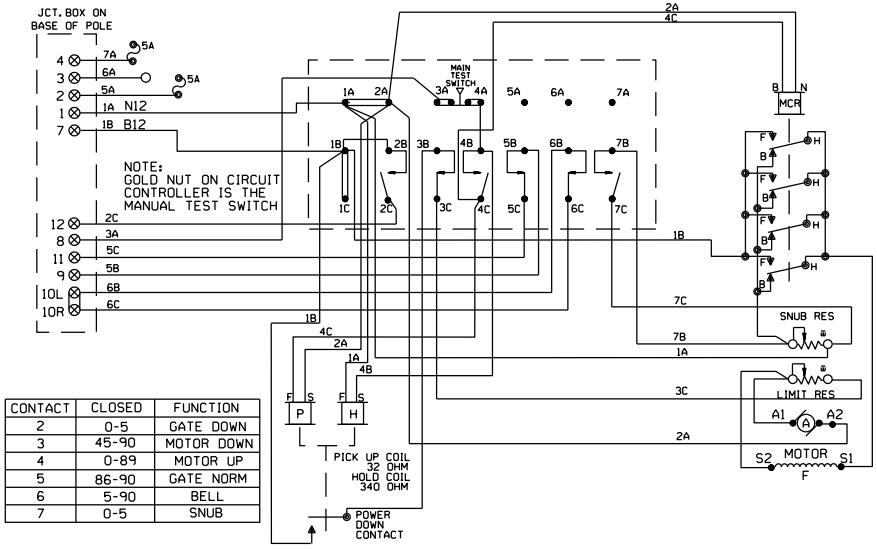

CONTACT	CLOSED	FUNCTION
2	0-5	GATE DOWN
3	45-90	MOTOR DOWN
4	0-89	MOTOR UP
5	86-90	GATE NORM
6	5-90	BELL
7	0-5	SNUB

WCH 3597-E

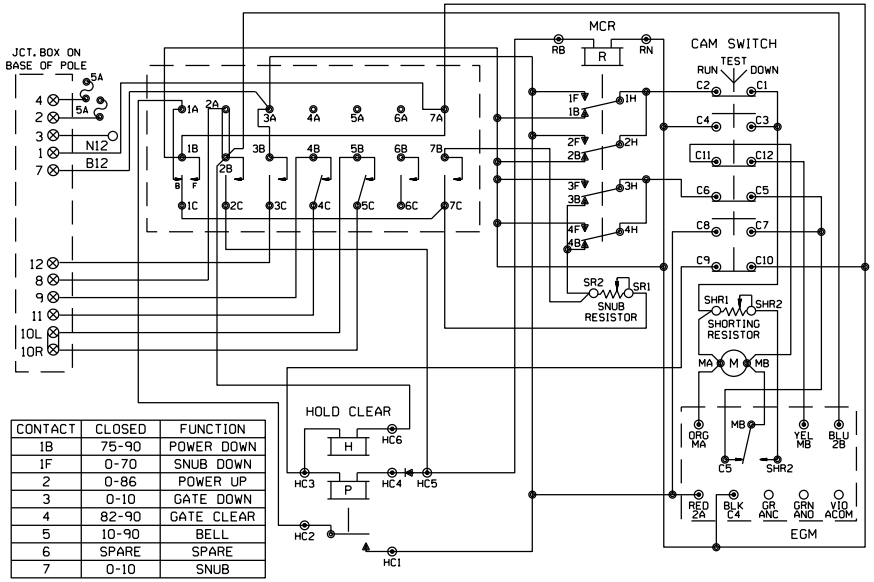

CONTACT	CLOSED	FUNCTION
1B	75-90	POWER DOWN
1F	0-70	SNUB DOWN
2	0-86	POWER UP
3	0-10	GATE DOWN
4	82-90	GATE CLEAR
5	10-90	BELL
6	SPARE	SPARE
7	0-10	SNUB

WCH 3597-RB

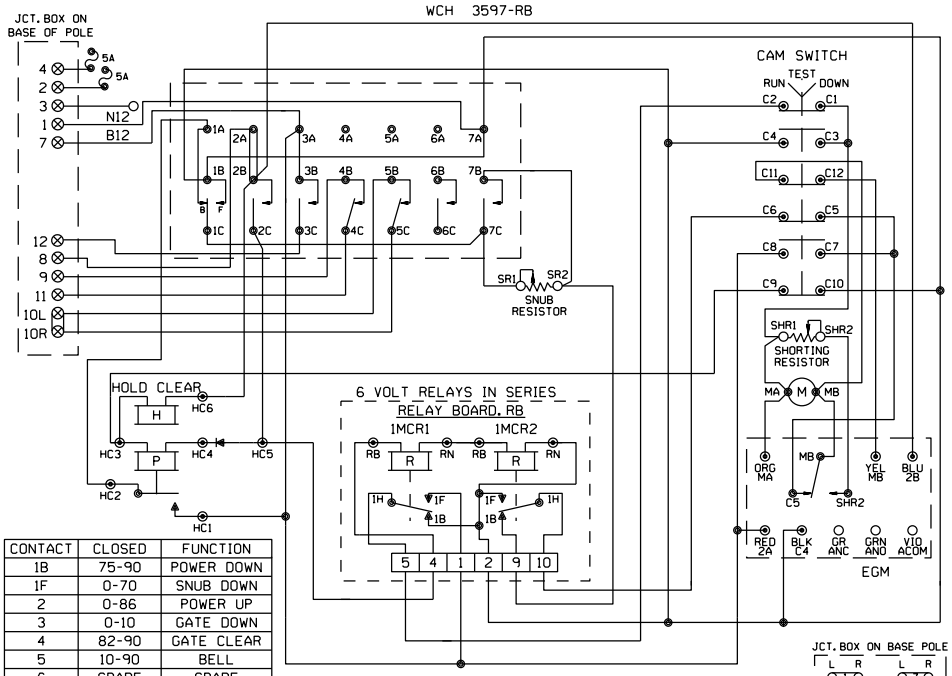

CONTACT	CLOSED	FUNCTION
1B	75-90	POWER DOWN
1F	0-70	SNUB DOWN
2	0-86	POWER UP
3	0-10	GATE DOWN
4	82-90	GATE CLEAR
5	10-90	BELL
6	SPARE	SPARE
7	0-10	SNUB

SHOW TYPE MECH. INSTALLED

ALL MECHANISMS SHOWN IN THE CLEAR POSITION

SAFETRAN S-60

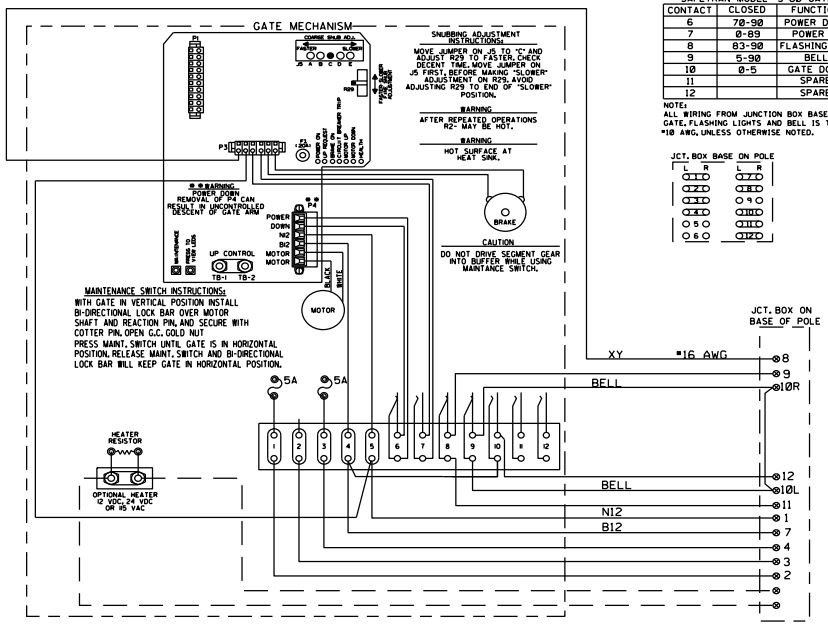

SAFETRAN MODEL "S-60" GATE

CONTACT	CLOSED	FUNCTION
6	70-90	POWER DOWN
7	0-89	POWER UP
8	83-90	FLASHING LGT.
9	5-90	BELL
10	0-5	GATE DOWN
11		SPARE
12		SPARE

NOTE:
ALL WIRING FROM JUNCTION BOX BASE TO GATE, FLASHING LIGHTS AND BELL IS TO BE #10 AWG, UNLESS OTHERWISE NOTED.

JCT. BOX BASE ON POLE

NEW SHEET

Designed: 02/19/15	
INSTALL GATES, FLASHERS AND CWT AT FORD AVENUE, M.P. 222.57	
Rec'd 1st	WO#: 27885 AND /NST/JTB

MODIFICATION LEVEL

D. A. LAST LEVEL CHECKED	DU
LAST LEVEL MOD THIS TYPICAL	DU
LAST LEVEL BY DESIGNER	DU
CHANGED FROM TYPICAL?	N

rev 01.24.11 4K CWIRING.7

CIRCUIT MODIFICATIONS ARE NOT TO BE MADE WITHOUT AUTHORITY FROM THE OFFICE OF SIGNAL DESIGN

Date: 02/19/15
Des: NST
Chk: NDR
AFE: 27885

UNION PACIFIC RAILROAD

WITT, ILLINOIS
FORD AVENUE
PANA SUBDIVISION

Office of AVP Engineering - Signal — Omaha, Nebraska

Sh.: 6
DOT 542151L
MP: 222.57
ID: 030222257.6X

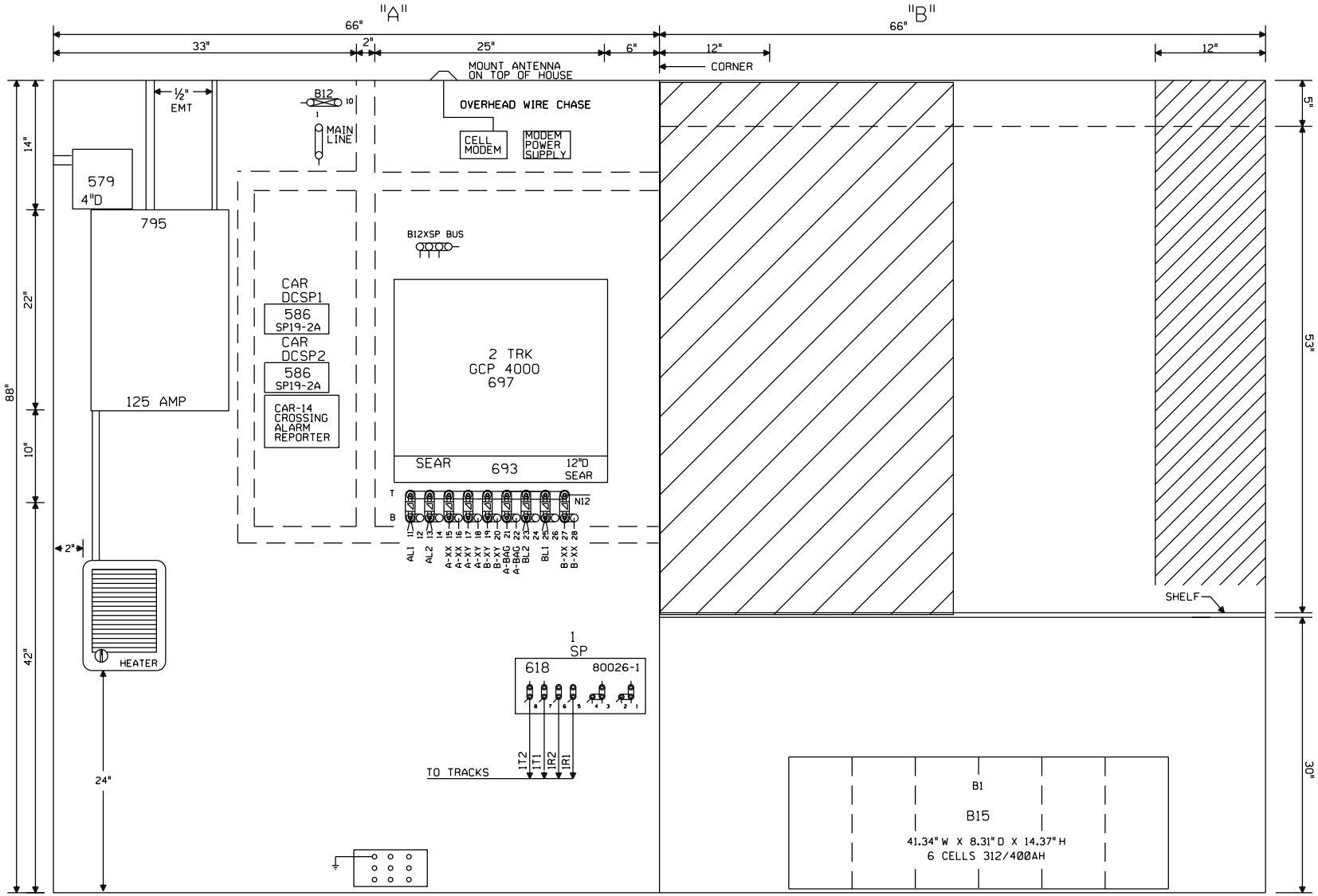

6X6 WAYSIDE/XING HOUSE WITH BLOWER U.P. PART#520-????

NOTE: ALL DIMENSIONS SHOWN ARE APPROXIMATE.

NEW SHEET

Designed: 02/19/15

INSTALL GATES, FLASHERS AND CWT AT FORD AVENUE. M.P. 222.57

Rec#: 15: WO#: 27885 /NDR /NST/JTB

MODIFICATION LEVEL	
O.A. LAST LEVEL CHECKED	DU
LAST LEVEL MOD THIS TYPICAL	DU
LAST LEVEL BY DESIGNER	DU
CHANGED FROM TYPICAL?	Y

rev 01.24.11 4K 4TKGFC.8

CIRCUIT MODIFICATIONS ARE NOT TO BE MADE WITHOUT AUTHORITY FROM THE OFFICE OF SIGNAL DESIGN

Date: 02/19/15
Des: NST
Chk: NDR
AFE: 27885

UNION PACIFIC RAILROAD

WITT, ILLINOIS
FORD AVENUE
PANA SUBDIVISION

Office of AVP Engineering - Signal Omaha, Nebraska

Sh.: 7
DOT 542151L
MP: 222.57
ID: 030222257.7X

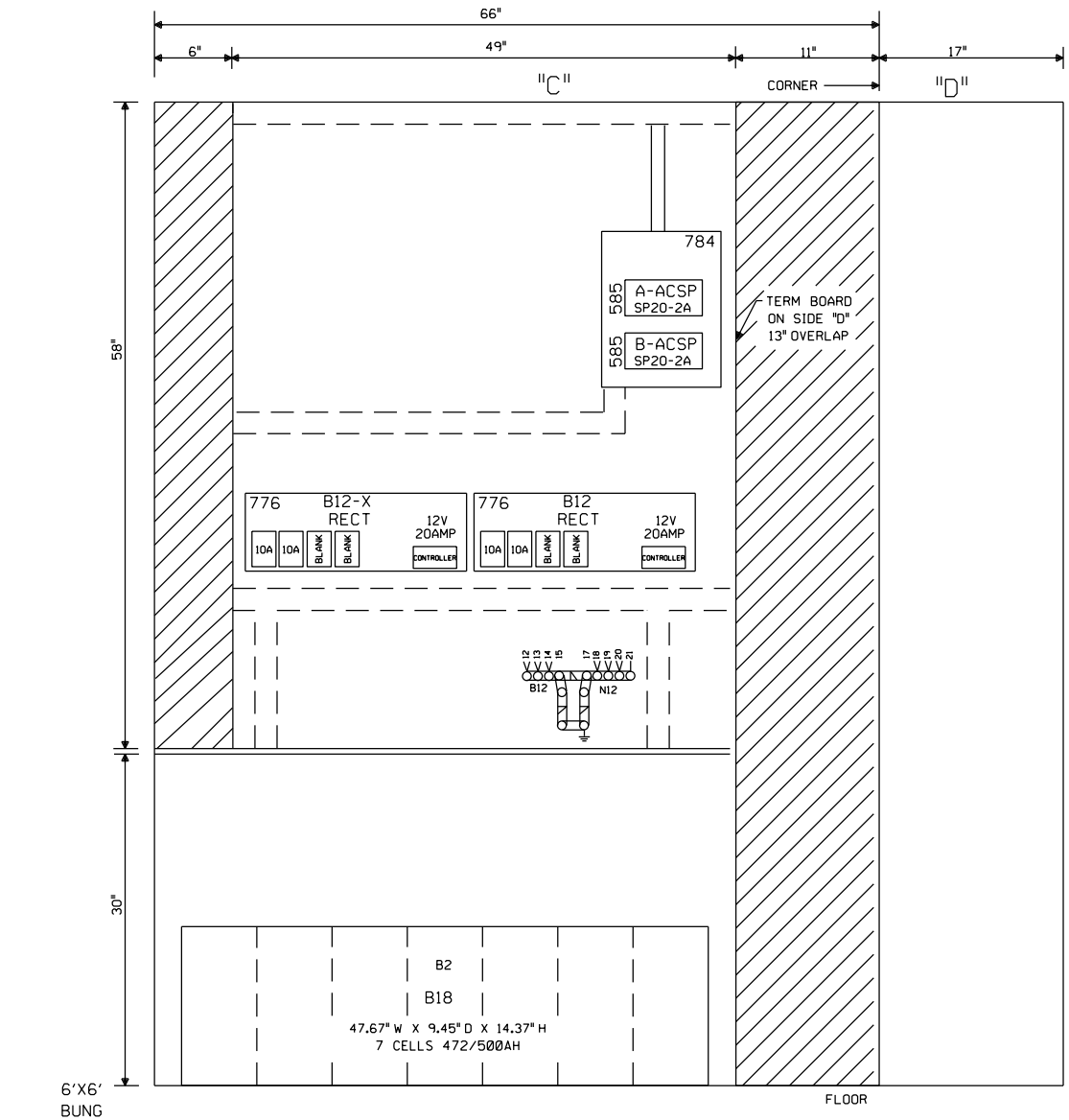

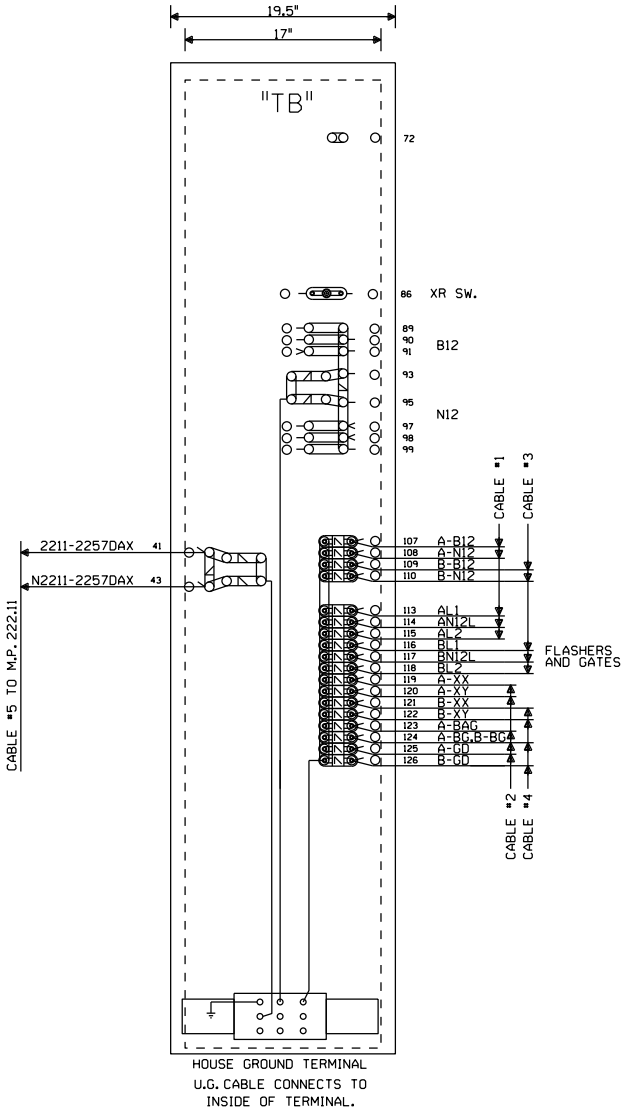

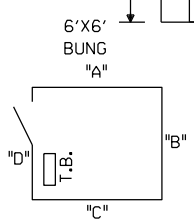

NOTE: NO TEST LINKS TO BE INSTALLED WITH CROSSING LIGHTING OR GATE MECH CIRCUITRY

NOTE: ALL DIMENSIONS SHOWN ARE APPROXIMATE.

NEW SHEET

Designed: 02/19/15 INSTALL GATES, FLASHERS AND CWT AT FORD AVENUE, M.P. 222.57 Rec#: WO#: 27885 IS: /NDR / /NST/JTB	MODIFICATION LEVEL Q. A. LAST LEVEL CHECKED DU LAST LEVEL MOD THIS TYPICAL DU LAST LEVEL BY DESIGNER DU CHANGED FROM TYPICAL? Y REV 01.24.11 4K GFC.9	CIRCUIT MODIFICATIONS ARE NOT TO BE MADE WITHOUT AUTHORITY FROM THE OFFICE OF SIGNAL DESIGN	Date: 02/19/15 Des: NST Chk: NDR AFE: 27885	UNION PACIFIC RAILROAD WITT, ILLINOIS FORD AVENUE PANA SUBDIVISION Office of AVP Engineering - Signal Omaha, Nebraska	Sh.: 8 DOT 542151L MP: 222.57 ID: 030222257.8X

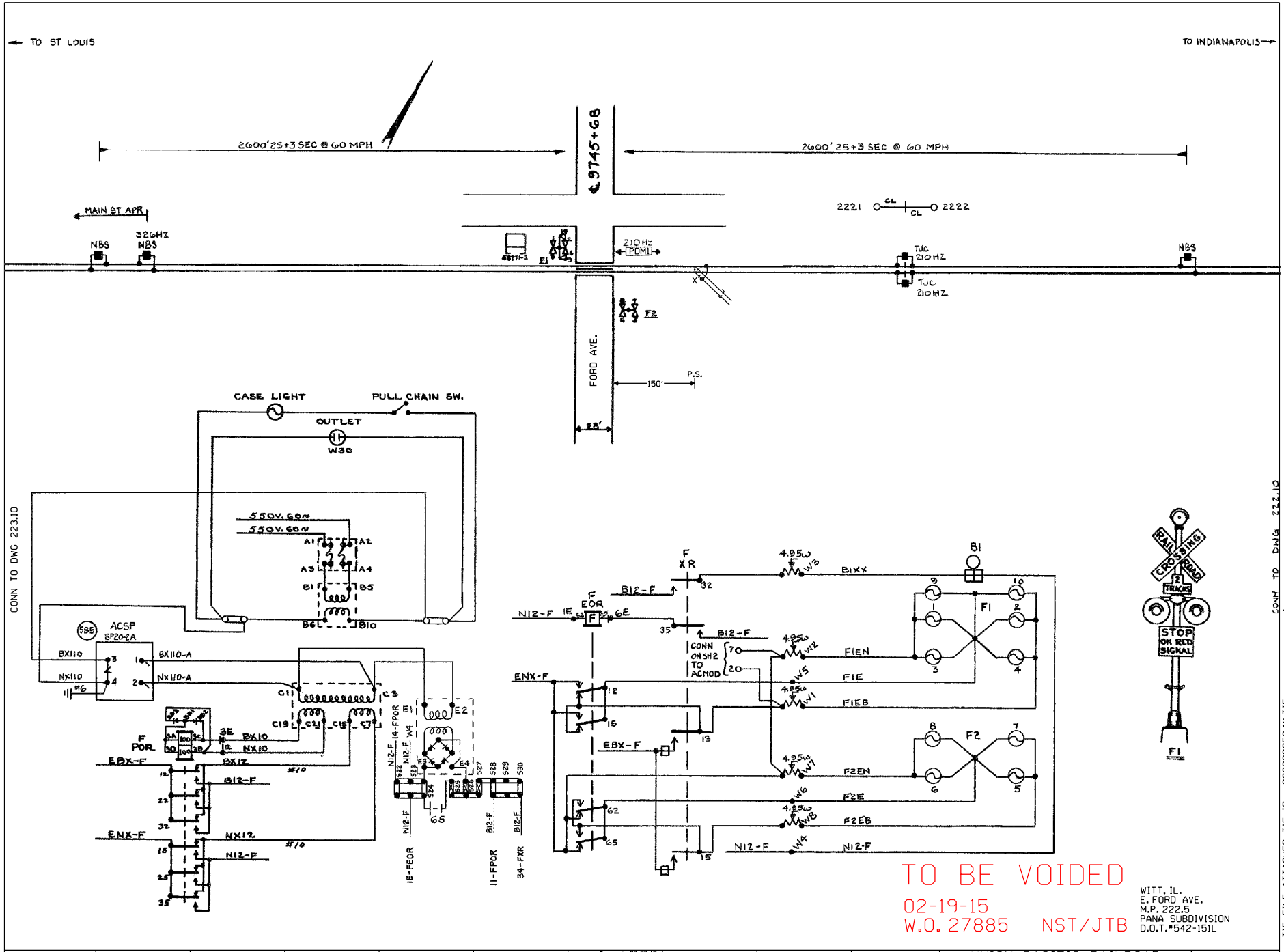

TO BE VOIDED

02-19-15
W.O. 27885 NST/JTB

WITT, IL.
E. FORD AVE.
M.P. 222.5
PANA SUBDIVISION
D.O.T.#542-151L

						Revised: 03-22-10 SWITCH REMOVED AT M.P. 222.60 PER. FIELD AC. Rec#: 16687 WO#: N/A IS: MJD/WIT/ /	REDRAWN FROM BAR CODE #157737 ORIGINAL DATE 10/16/2001	CIRCUIT MODIFICATIONS ARE NOT TO BE MADE WITHOUT AUTHORITY FROM THE OFFICE OF SIGNAL DESIGN	DES: DIG: CHK: A.F.E. ID= 030222250.1X	UNION PACIFIC RAILROAD HIGHWAY CROSSING PROT. POPLAR ST. WITT, ILLINOIS Office of Sr.AVP Engineering - Signal/TCO OMAHA NEBR.	DATE 10-16-01 SHEET 1 DWG 222.5 S-302-M

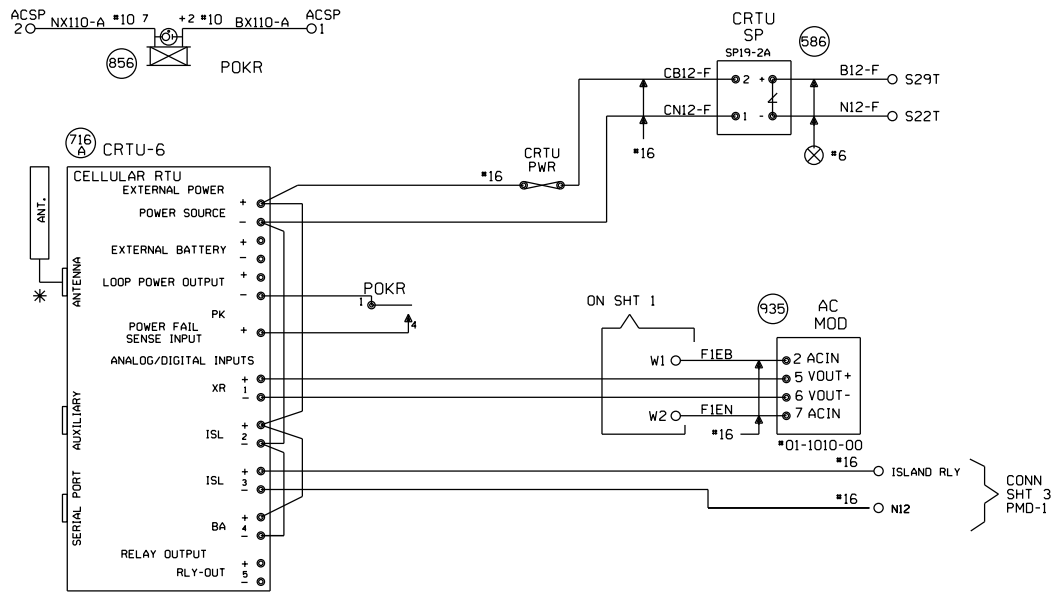

MOUNT CRTU AT LEAST 18" AWAY FROM HIGH VOLTAGE POWER SOURCES

NOTES:

ALL DIODES 1N5060 OR 1N4004 UNLESS OTHERWISE NOTED.

✳ MOUNT ANTENNA ON TOP OF HOUSE.

ALL WIRES #18 UNLESS OTHERWISE NOTED.

ALL UNUSED 'NC' INPUTS MUST BE TIED HIGH TO BATTERY

ALL UNUSED ANALOG INPUTS MUST BE TIED HIGH TO BATTERY

ALL UNUSED 'NO' INPUTS MUST BE DISCONNECTED

ANALOG AND AC INPUT MODULES MUST BE MOUNTED LESS THAN 12" FROM CRTU

CRTU FRONT PANEL DISPLAY CHART INDICATES NORMAL STATE

■ DIGITAL INPUT HIGH, OR POWER FAIL INPUT CLOSED

□ DIGITAL INPUT LOW, OR POWER FAIL INPUT OPEN

NORMAL STATE FOR ANALOG CHANNELS IS EQUAL TO THE STORED NOMINAL VOLTAGE +120% OR -81%

□ L ← LATCH IS SET BECAUSE CRTU DETECTED AN ALARM CONDITION

■ 12.06V L

'sRUN MODE' 'sRUN MODE-SILENT'

CRTU RADIO IS DISABLED. REPROGRAM CRTU WITH LAPTOP.

TO BE VOIDED

02-19-15
W.O. 27885 NST/JTB

UNIT INSTALLATION AND SETUP

R.R. SITE ID WHERE: SSSS = 4 CHARACTER SUBDIVISION ID. FILL WITH PRECEDING ZEROS AS REQUIRED. THE MAIN TRACK SUBDIVISION ID* ID* IS IN THE CURRENT TIMETABLE. INDUSTRIAL LEADS, LEASED, AND LEAD TRACKS LISTED WITHIN THE SUBDIVISION MAY HAVE THEIR OWN UNIQUE SUBDIVISION ID*. DO NOT AUTOMATICALLY USE THE MAIN TRACK SUBDIVISION ID* FOR THESE OTHER TRACKS. ALWAYS DOUBLE CHECK WITH THE MOST CURRENT PRINTED COPY OF THE TIMETABLE.
LLLLLLLL = 8 CHARACTERS USE DOT* AT CROSSINGS, AND USE MP* AT WAYSIDE AND HBD SITES. FILL WITH PRECEDING DASHES AS REQUIRED.
THE MP* MUST USE A DECIMAL POINT TO SEPARATE NUMBERS.
AA = 2 CHARACTER STATE NAME FOR CROSSINGS.
AA = 'WD' FOR WAYSIDE LOCATIONS, AA = 'HB' FOR HBD SITES.
MUST BE 14 CHARACTERS LONG, NO SPACES ALLOWED.

SITE IDENTIFIER: SSSSLLLLLLLLAA	0044-542151LIL
SIGNAL STRENGTH dBm	
CARRIER ID	532
FIRMWARE VERSION	2.3.06
SERIAL NUMBER	03-02289-0901
CONFIGURATION NET	MICROBURST
SIGNAL STATUS	
SCADANET STATUS	
SILENCE INTERVAL	60 MINUTES
HEALTHCHECK INTERVAL	EVERY 2 DAYS
ALARM DEFER DELAY	240 MINUTES (4 HOURS)
OPERATION TO RESUME:	RUN
CALIBRATION CONSTANT	
CH4	
POWER SOURCE	

FIELD PROVIDES: SAMPLED NOMINAL VOLTAGES, SCADANET STATUS CALIBRATION CONSTANTS, SERIAL NUMBER, AND SIGNAL STATUS.

CHANNEL SETUP - STANDARD CONFIGURATION 11:XR,ISL,ISL,BA

CHANNEL NORMAL STATE	SENSE (NO/NC)	NAME FUNCTION	RECOGNITION DELAY SECONDS ACTIVE	RECOGNITION DELAY SECONDS NORMAL	RETURN TO NORMAL	REPORTING MODE	ALARM LINKED CHANNEL	ALARM LINKED CRITERIA	EVENT LOGGING ENABLED OPTIONS
POWER FAIL (CH5) ■	POWER FAIL DETECT NO	PFin-PK AC POWER FAIL	7,200 ALARM	300 NORMAL	ENABLED	ALERT	DISABLED	N/A	
CH1 □ ■	DIGITAL INPUT NO	CH1-XR XR DOWN TO LONG	1,800 ALARM	1 NORMAL	ENABLED	ALERT	DISABLED	N/A	
CH2 ■ □	DIGITAL INPUT NC	CH2-ISL ISLONLY ISLAND OCCUPIED DAX, PREEMPT WARNING TIME	1 ACTIVE	1 NORMAL	DISABLED	STATUS ONLY	DISABLED	N/A	
CH3 ■ □	DIGITAL INPUT NC	CH3-ISL ISLAND OCCUPIED DAX, PREEMPT WARNING TIME	1 ACTIVE	1 NORMAL	DISABLED	STATUS ONLY	DISABLED	N/A	DIGITAL EVENTS
CH4 STORED NOMINAL VOLTAGE	ANALOG INPUT N/A	CH4-BA/V BATTERY MONITOR BATTERY LOW	300 ALARM	300 NORMAL	DISABLED	ALERT W/UPDATE	DISABLED	N/A	CH1-XR CH2-ISL CH3-ISL
POWER SOURCE (CH6)	ANALOG INPUT N/A	PS-BA/V BATTERY MONITOR BATTERY LOW	300 ALARM	300 NORMAL	DISABLED	ALERT W/UPDATE	DISABLED	N/A	

ANALOG CHANNEL	USEFUL RANGE VOLTS LOW	USEFUL RANGE VOLTS HIGH	DISPLAYED RANGE VOLTS LOW	DISPLAYED RANGE VOLTS HIGH	RELATIVE ALARM POINT LOW	RELATIVE ALARM POINT HIGH	ABSOLUTE ALARM POINT LOW	ABSOLUTE ALARM POINT HIGH	AUTOMATIC UPDATE INTERVAL	STORED NOMINAL VOLTAGE	SAMPLED NOMINAL VOLTAGE
CH4	0.0	30.00	0.0	30.00	81%	120%	10.0	28.0	10 DAYS	12.69	
POWER SOURCE	0.0	30.00	0.0	30.00	81%	120%	10.0	28.0	10 DAYS	12.69	
RELAY OUTPUT	NAME RLY-OUT		ACTIVE SET-UP-OPEN		NORMAL CLR-DN-CLOSE		PULSE DURATION		15 SECONDS	CHARTS REV'D 3-2-01	

MAINTENANCE OPERATIONS

TO START OR ABORT ANY PROCEDURE

1. PRESS THE 'CANCEL' BUTTON FIRST

WHEN RESPONDING TO A CALL, PUT THE CRTU IN THE 'SILENCE ALARMS' MODE

1. PRESS 'SELECT' AND THEN '+ ARROW' BUTTON UNTIL
   DISPLAY: ACTION?
   SILENCE ALARMS
2. PRESS THE 'SELECT' BUTTON TWICE
3. CORRECT PROBLEM AND SIMULATE NORMAL TRAIN MOVEMENT THROUGH THE LOCATION
4. EXAMINE EACH CHANNEL ON THE CRTU
5. PRESS THE '+/- ARROW' BUTTON
   VERIFY ALL CHANNELS INDICATE A NORMAL STATE
   NORMAL STATES ARE ON THE CHANNEL SETUP CHART

CLEAR TIMERS, LATCHES AND SEND ALL NORMAL

1. DO STEPS #1 - #5 ABOVE, AND PRESS 'CANCEL'.
2. PRESS 'SELECT' AND THEN '- ARROW' BUTTON UNTIL
   DISPLAY: ACTION?
   SERVICE MODE
3. PRESS 'SELECT' AGAIN TO RESET TIMERS, AND IF
   DISPLAY: SERVICE MODE
   ALL NORMAL
4. PRESS 'SELECT' AGAIN TO CLEAR LATCHES, AND SEND ALL NORMAL, SKIP STEPS #5-#6.
5. HOWEVER, IF ALARMS ARE NOT CLEARED;
   DISPLAY: SERVICE MODE
   ALARMS PENDING/PRESENT
6. PRESS 'CANCEL', CORRECT PROBLEM AND REPEAT STEPS #2 THRU #5 UNTIL ALL NORMAL SENT.

TO CANCEL THE 'SILENCE ALARMS' MODE

1. PRESS 'SELECT' AND THEN '+ ARROW' BUTTON UNTIL
   DISPLAY: ACTION?
   CANCEL SILENCE
2. PRESS THE 'SELECT' BUTTON AGAIN

EXAMINE & SET BATTERY VOLTAGE NOMINAL VALUE

1. PRESS THE '+ ARROW' OR '- ARROW' BUTTON UNTIL THE DESIRED CHANNEL IS DISPLAYED.
   DISPLAY: PS-BA:
   13.83V NORMAL
2. VERIFY THE DISPLAYED READING WITH A DIGITAL VOLTMETER
3. PRESS THE 'SELECT' BUTTON, AND THE CRTU DISPLAY WILL SWITCH BETWEEN CURRENT/SAVED NOMINAL VOLTAGE VALUES.
   DISPLAY: NOMINAL ON #6? (CURRENT)
   13.83
   DISPLAY: SAVED NOMINAL 6 (STORED)
   12.69
4. PRESS THE 'SELECT' BUTTON AND THE CURRENT OR 'NOMINAL ON' VALUE WILL BE SAMPLED AND STORED AS THE 'SAVED NOMINAL' VALUE
5. VERIFY THE 'NOMINAL ON' AND 'SAVED NOMINAL' VALUES ARE EQUIVALENT, REPEAT STEPS #1 THRU #3 & PRESS THE 'CANCEL' BUTTON.

WITT, IL.
E. FORD AVE.
M.P. 222.5
PANA SUBDIVISION
D.O.T.#542-151L

				Revised: 03-22-10 SWITCH REMOVED AT M.P. 222.60 PER. FIELD AC. Rec#: 16687 WO#: N/A IS: MJD/WIT/ / /	REV. 10-16-01 ADD CRTU W.O.#3326 7-18-01 DEL/WITT/ /EML	MODIFICATION LEVEL Q.A. LAST LEVEL CHK'D. LAST LEVEL MOD. THIS TYP. LAST LEVEL BY DESIGNER. CHANGED FROM TYP.? Y/N	CIRCUIT MODIFICATIONS ARE NOT TO BE MADE WITHOUT AUTHORITY FROM THE OFFICE OF SIGNAL DESIGN	DES: EML DIG: EML CHK: EML A.F.E. 3326 ID: 030222250.2X	UNION PACIFIC RAILROAD HIGHWAY CROSSING PROT. POPLAR ST. WITT, ILLINOIS Office of Sr.AVP Engineering - Signal/TCO OMAHA NEBR.	DATE 5-3-01 SHEET 2 DWG 222.5 S-302-M

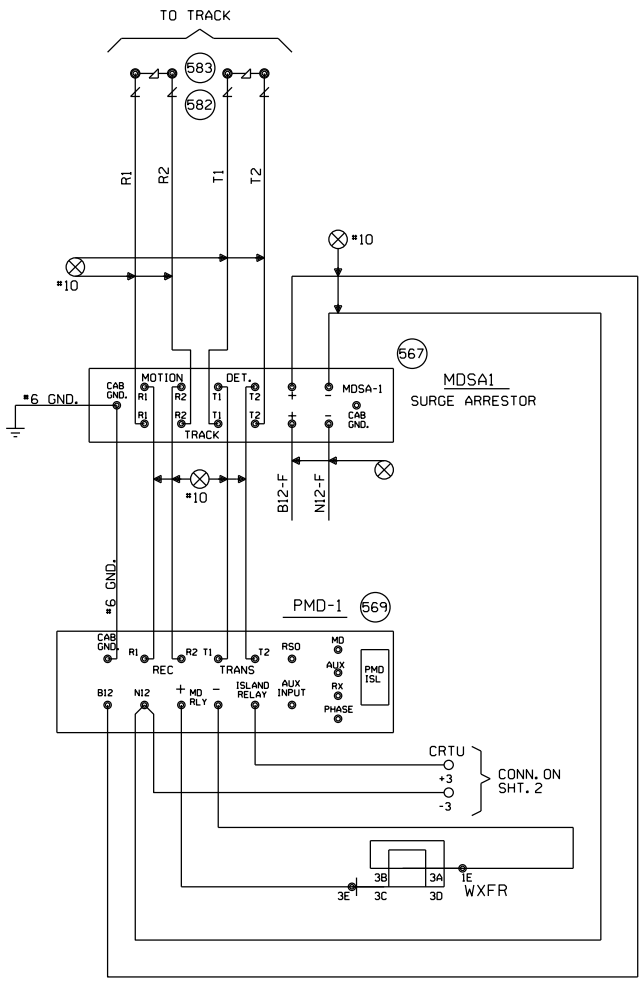

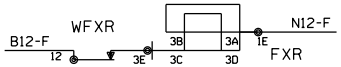

TO BE VOIDED

02-19-15
W.O. 27885 NST/JTB

WITT, ILLINOIS
E. FORD AVE.
M.P. 222.5
PANA SUB.
D.O.T.#542-151L

Revised: 03-22-10 SWITCH REMOVED AT M.P. 222.60 PER. FIELD AC. Rec': 16687 WO#: N/A IS: MJD/WIT/ / /	REV. 10-16-01 ADD CRTU W.O.#3326 7-18-01 DEL/WITT/ /EML	CIRCUIT MODIFICATIONS ARE NOT TO BE MADE WITHOUT AUTHORITY FROM THE OFFICE OF SIGNAL DESIGN	DES: DEL DIG: WITT CHK: EML A.F.E. 3326 ID: 030222250.3X	UNION PACIFIC RAILROAD HIGHWAY CROSSING PROT. POPLAR ST. WITT, ILLINOIS Office of Sr.AVP Engineering - Signal/TCO OMAHA NEBR.	DATE 5-3-01 SHEET 3 DWG 222.5 S-302-M

I.S. 7-1-92 WJB 1PMDFL.3 12-12-90

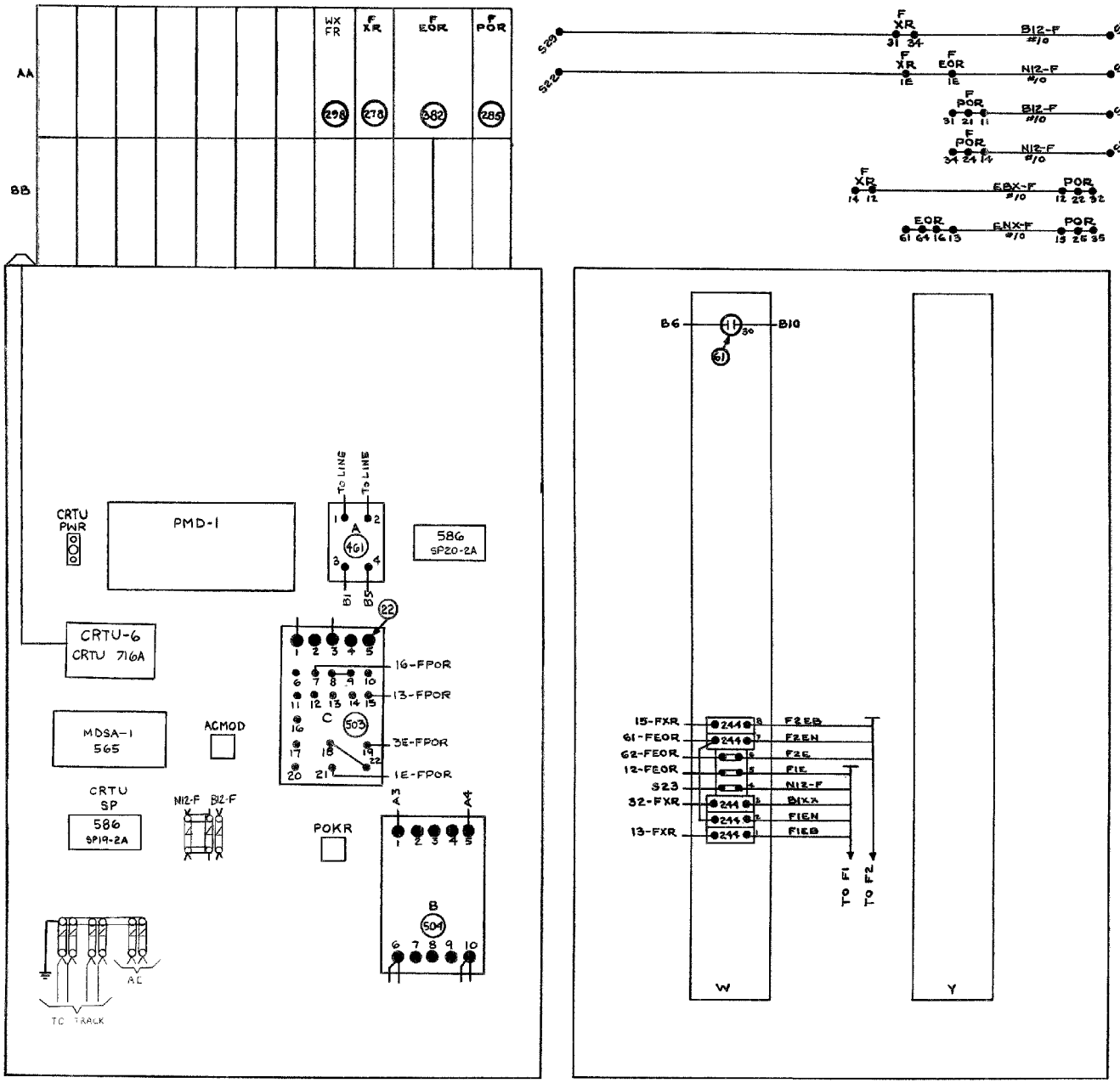

MOUNTING BOARD (FRONT)

MOUNTING BOARD (REAR)

TO BE VOIDED
02-19-15
W.O. 27885 NST/JTB

NOTE:
REFERENCE NUMBERS SHOWN IN CIRCLES N.Y.C.S. APPARATUS REFERENCE LIST S-500. GROUND CONNECTIONS TO BE MADE IN ACCORDANCE WITH PLAN S-9038.

WITT, IL.
E. FORD AVE.
M.P. 222.5
PANA SUBDIVISION
D.O.T.#542-151L

TIF FILE ATTACHED TIF ID = 030222250.4X.TIF

						Revised: 03-22-10 SWITCH REMOVED AT M.P. 222.60 PER. FIELD AC. Rec#: 16687 WO#: N/A IS: MJD/WIT/ /	REDRAWN FROM BAR CODE #157740 ORIGINAL DATE 10/16/2001	CIRCUIT MODIFICATIONS ARE NOT TO BE MADE WITHOUT AUTHORITY FROM THE OFFICE OF SIGNAL DESIGN	DES: DIG: CHK: A.F.E. ID= 030222250.4X	UNION PACIFIC RAILROAD HIGHWAY CROSSING PROT. POPLAR ST. WITT, ILLINOIS Office of Sr.AVP Engineering - Signal/TCO OMAHA NEBR.	DATE 10-16-01 SHEET 4 DWG 222.5 S-302-M

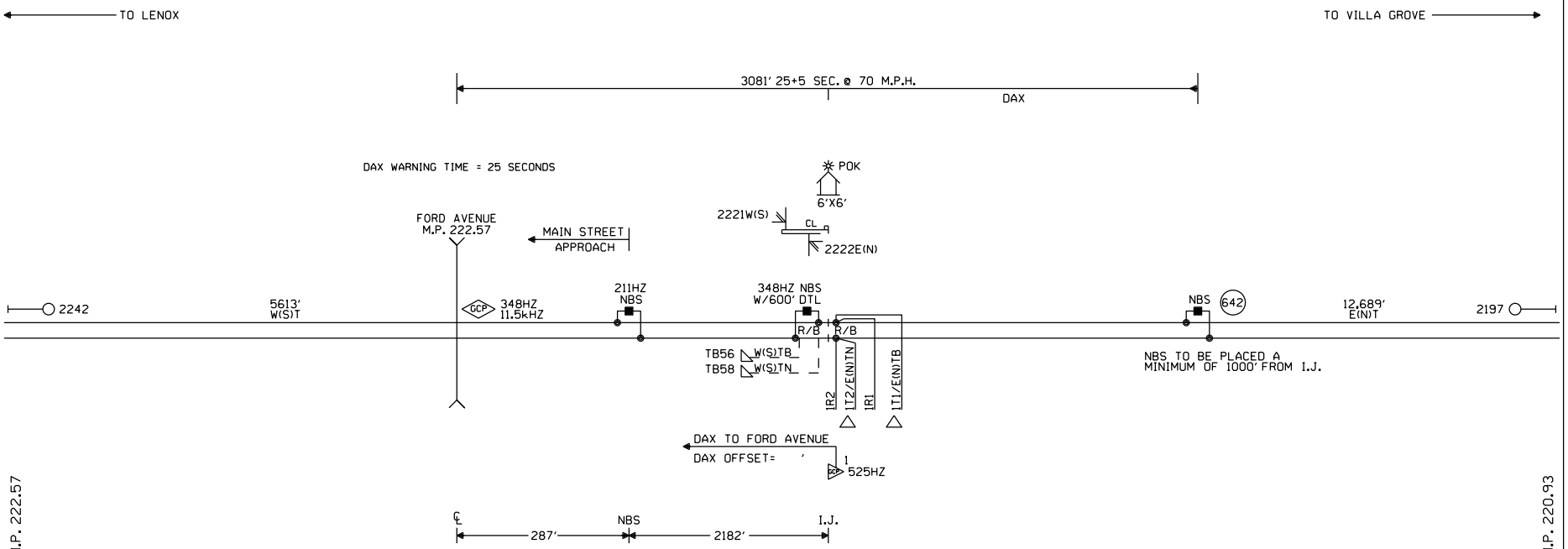

CONSTRUCTION NOTES:

1. REUSE EXISTING SIGNAL HEADS, MAST, AND FOUNDATION.
2. SHOP TO WIRE FOR AND FIELD TO INSTALL EC-4 BOX FROM EXISTING M.P. 222.11 CASE.

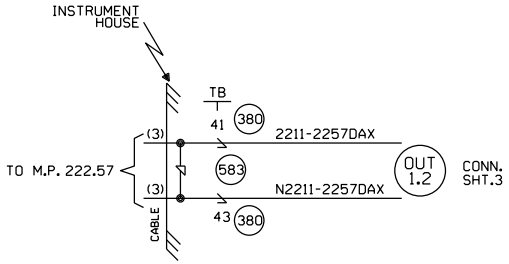

NOTES:

⊗ = TWISTED WIRES
ALL TRACK WIRES 2C. #6
INSULATED 1 TWIST PER FT.

TRANSMITTER AND RECEIVER LEADS TO BE SEPARATED BY AT LEAST 12" IN TRENCH, LENGTHS SHOULD NOT EXCEED MANUFACTURES RECOMMENDATION.

ALL BUNGALOW WIRING TO BE #16 AWG FLEX UNLESS OTHERWISE SPECIFIED EXCEPT ALL GROUND WIRE TO BE #6 AWG FLEX OR LARGER.

REFER TO UP STANDARD DWG. FOR BUNGALOW GROUNDING.

PORTABLE GENERATOR EXTENSION CORD FOR 240V TO 240V IS PROVIDED AS WELL AS A 120V TO 240V ADAPTER.

⊘ = OBSERVE CORRECT POLARITY EQUIPMENT WILL BE DAMAGED IF CONNECTIONS ARE REVERSED.

△ = ENSURE TRACK POLARITY IS TRANSPOSED ACROSS ALL INSULATED JOINTS.

⧖ = TEST TERMINALS MUST BE INSTALLED ON ALL WIRING CONNECTED TO EXTERNAL CABLES (EXCEPT TRACK AND A.C. POWER WIRES).

OFFSET DISTANCES
TO BE VERIFIED BY FIELD

W(S) ←—○—→ E(N)

CABLE TABULATION

CABLE #3 7C#14 U.G.B.T. HOUSE TO M.P. 222.57

NEW SHEET

					Designed: 02/19/15 INSTALL GATES, FLASHERS AND CWT AT FORD AVENUE, M.P. 222.57 Rec#: WO#: 27885 IS: /NDR /NST/JTB	MODIFICATION LEVEL O. A. LAST LEVEL CHECKED DU LAST LEVEL MOD THIS TYPICAL DU LAST LEVEL BY DESIGNER DU CHANGED FROM TYPICAL? Y REV 01.24.11 4K REMOTE.1	CIRCUIT MODIFICATIONS ARE NOT TO BE MADE WITHOUT AUTHORITY FROM THE OFFICE OF SIGNAL DESIGN	Date: 02/19/15 Des: NST Chk: NBT AFE: 27885	UNION PACIFIC RAILROAD ONE TRACK INTERMEDIATE PANA SUBDIVISION Office of AVP Engineering - Signal Omaha, Nebraska	Sh.: 1 MP: 222.11 ID: 030222211.1X

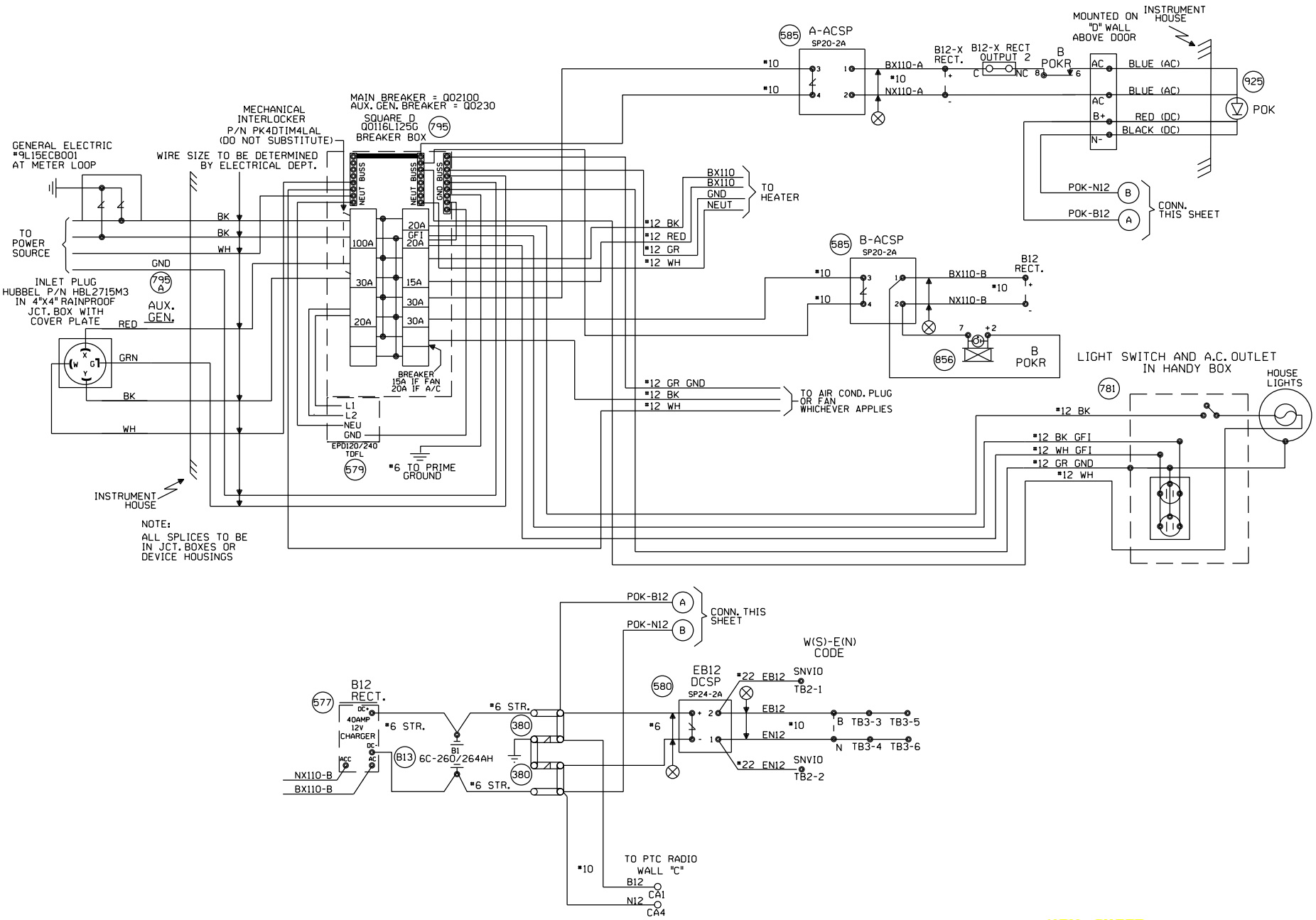

NEW SHEET

Designed: 02/19/15 INSTALL GATES, FLASHERS AND CWT AT FORD AVENUE, M.P. 222.57 Rec#: WO#: 27885 IS: /NDR /NST/JTB	MODIFICATION LEVEL		CIRCUIT MODIFICATIONS ARE NOT TO BE MADE WITHOUT AUTHORITY FROM THE OFFICE OF SIGNAL DESIGN	Date: 02/19/15 Des: NST Chk: NDR AFE: 27885	UNION PACIFIC RAILROAD ONE TRACK INTERMEDIATE PANA SUBDIVISION Office of AVP Engineering - Signal Omaha, Nebraska	Sh.: 2 MP: 222.11 ID: 030222211.2X
	Q. A. LAST LEVEL CHECKED	DU				
	LAST LEVEL MOD THIS TYPICAL	DU				
	LAST LEVEL BY DESIGNER	DU				
	CHANGED FROM TYPICAL?	Y				
	REV 01.24.11 4K SEARAC.2					

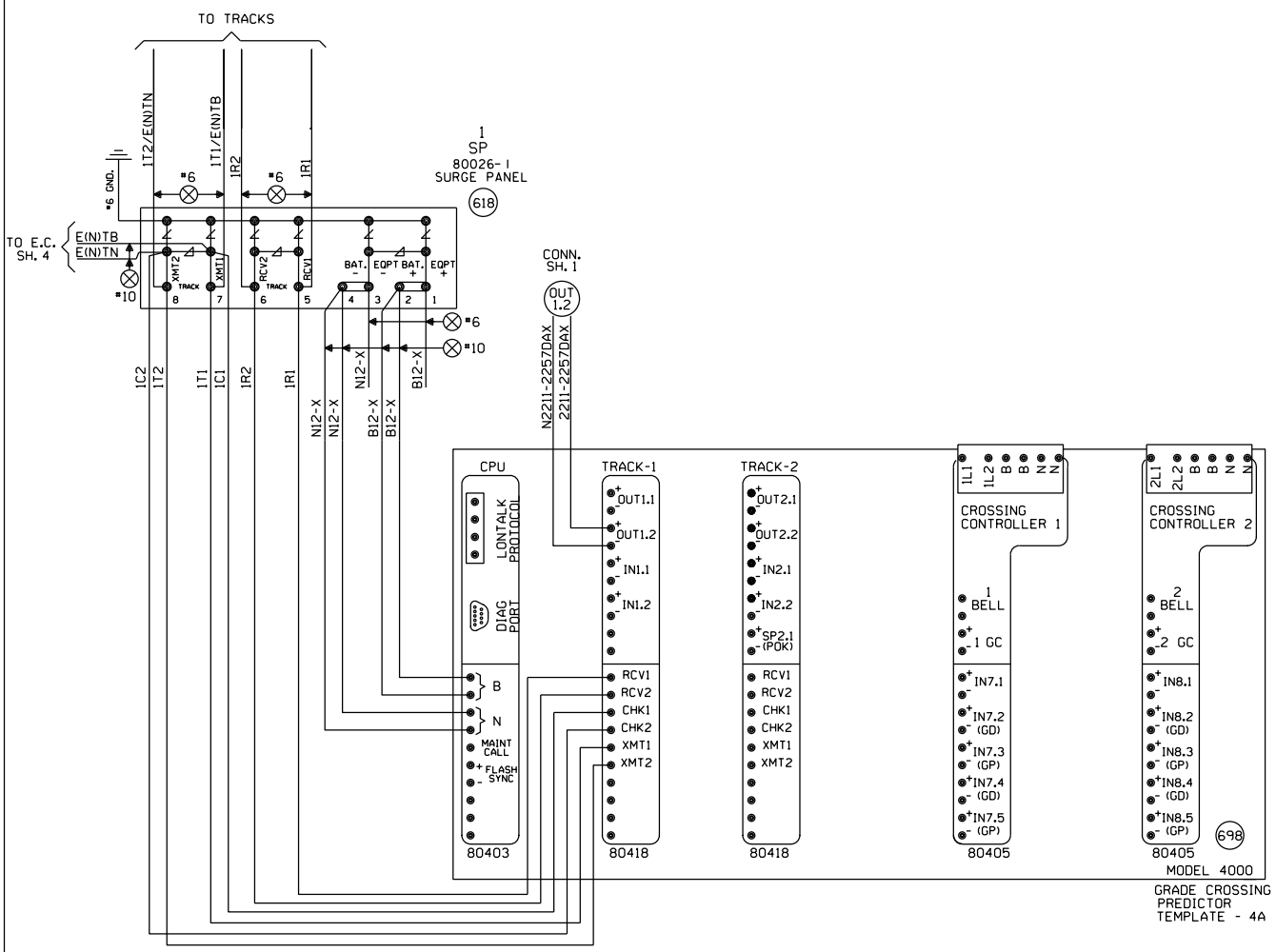

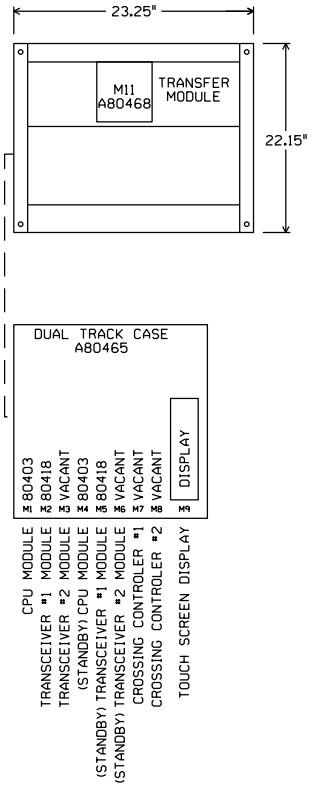

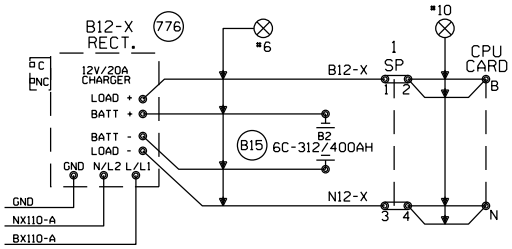

"Mf" FREQUENCY (HZ)	MAXIMUM TRANSMIT WIRE LENGTH (FEET)
86	100
114	125
156	150
211	200
285-970	250

NOTE:
EACH TRANSMITTER TO RAIL WIRE FROM XMT1 AND XMT2 MUST NOT EXCEED THE MAXIMUM LENGTH SPECIFIED IN THE TABLE SHOWN. THE RECEIVER WIRE LENGTH IS NOT CRITICAL. DOES NOT APPLY TO 6 TRACK WIRE APPLICATION.

NEW SHEET

Designed: 02/19/15
INSTALL GATES, FLASHERS AND CWT AT FORD AVENUE, M.P. 222.57
Rec#: WO#: 27885
IS: /NDR
/NST/JTB

MODIFICATION LEVEL	
O. A. LAST LEVEL CHECKED	DU
LAST LEVEL MOD THIS TYPICAL	DU
LAST LEVEL BY DESIGNER	DU
CHANGED FROM TYPICAL?	Y

REV 01.24.11 4K 2TKGF.3

CIRCUIT MODIFICATIONS ARE NOT TO BE MADE WITHOUT AUTHORITY FROM THE OFFICE OF SIGNAL DESIGN

Date: 02/19/15
Des: NST
Chk: NDR
AFE: 27885

UNION PACIFIC RAILROAD

ONE TRACK INTERMEDIATE
PANA SUBDIVISION

Office of AVP Engineering - Signal Omaha, Nebraska

Sh.: 3
MP: 222.11
ID: 030222211.3X

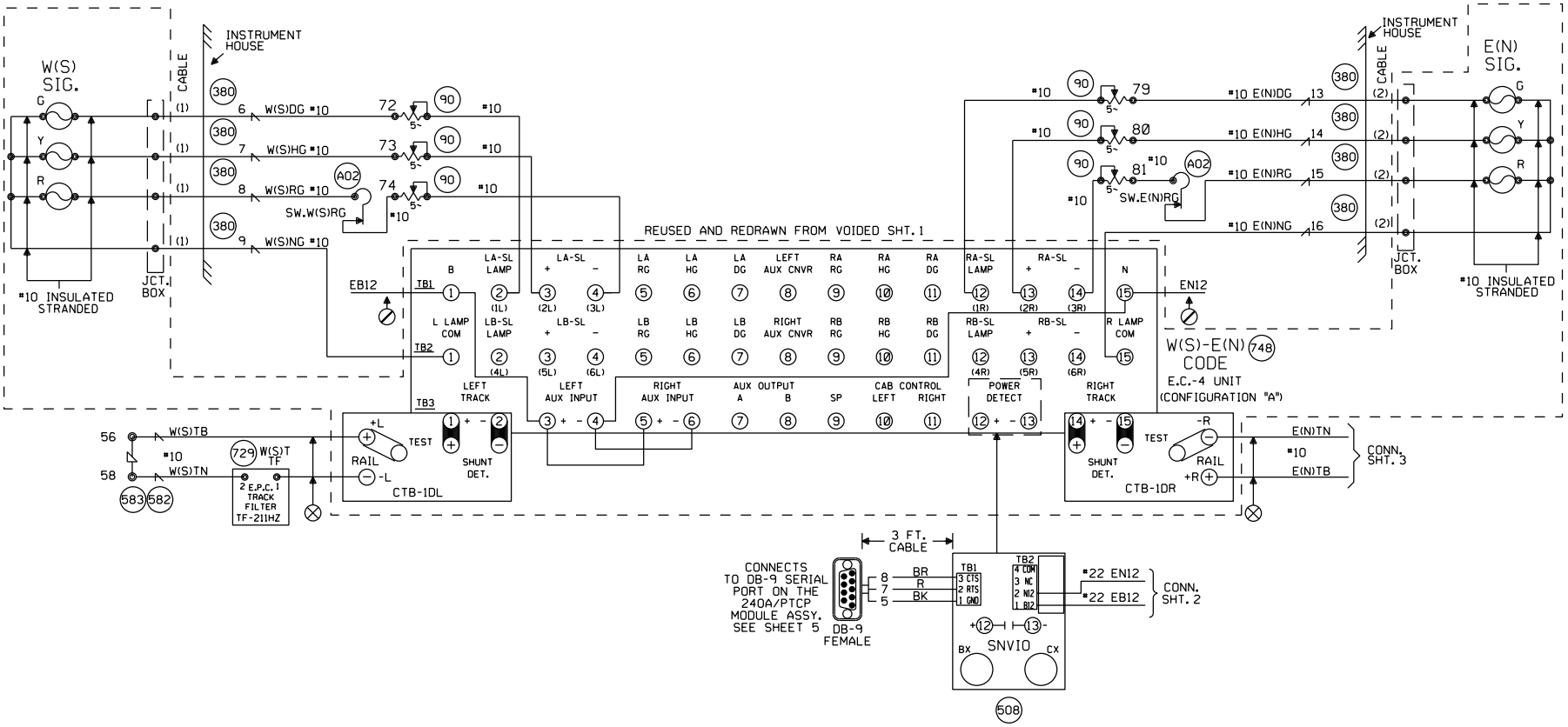

CABLE TABULATION

CABLE #1 5C#6 U.G.B.T. HOUSE TO SIG. W(S)
CABLE #2 5C#6 U.G.B.T. HOUSE TO SIG. E(N)

NEW SHEET

Designed: 02/19/15 INSTALL GATES, FLASHERS AND CWT AT FORD AVENUE, M.P. 222.57 Rec#: WO#: 27885 IS: /NDR /NST/JTB	CIRCUIT MODIFICATIONS ARE NOT TO BE MADE WITHOUT AUTHORITY FROM THE OFFICE OF SIGNAL DESIGN	Date: 02/19/15 Des: NST Chk: NDR AFE: 27885	UNION PACIFIC RAILROAD ONE TRACK INTERMEDIATE PANA SUBDIVISION Office of AVP Engineering - Signal Omaha, Nebraska	Sh.: 4 MP: 222.11 ID: 030222211.4S

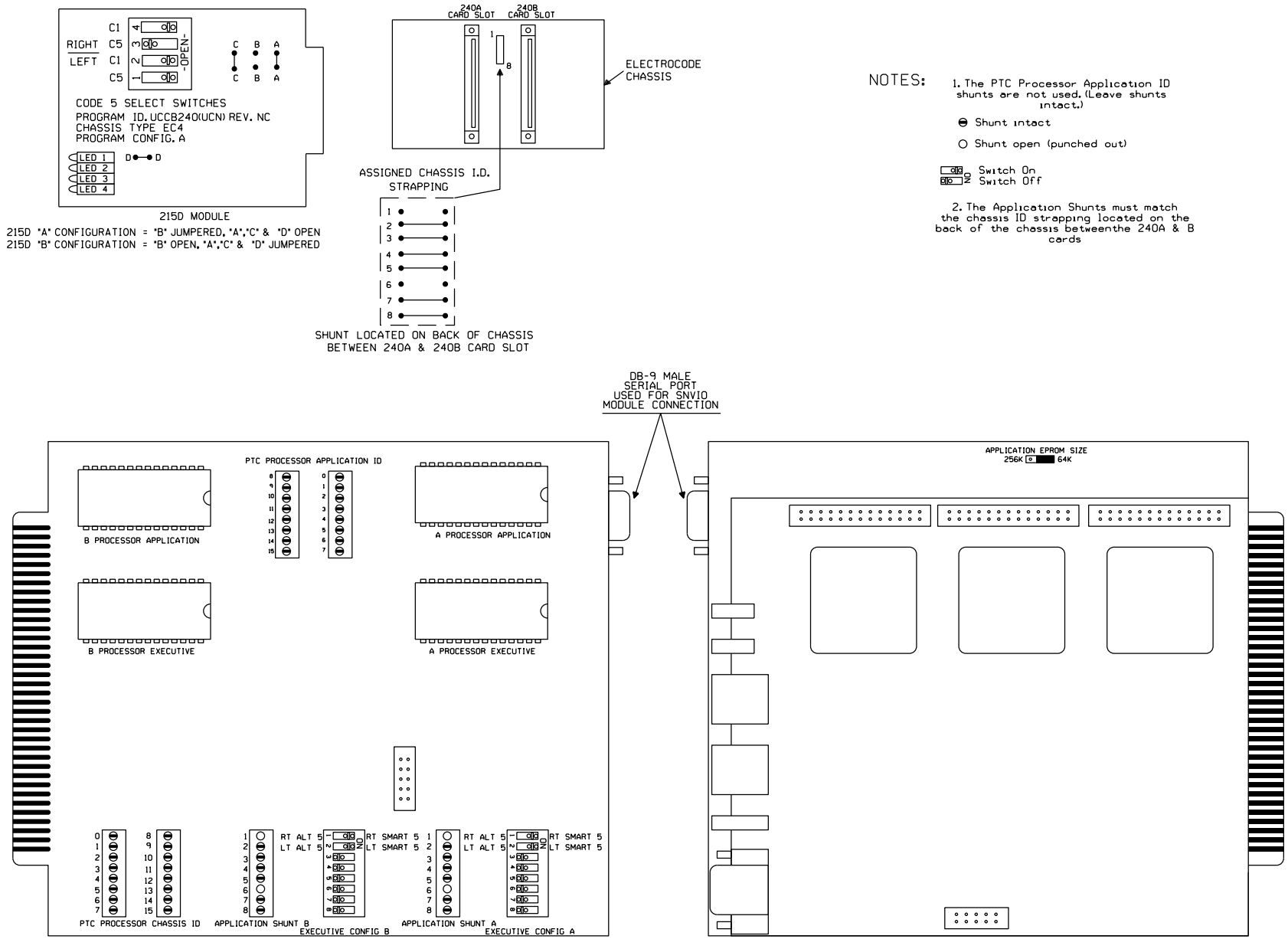

240A / PTCP

(Program EPROM side)

240A / PTCP

(EPROM Size Jumper side)

NOTES:

1. The PTC Processor Application ID shunts are not used. (Leave shunts intact.)

⊖ Shunt intact

○ Shunt open (punched out)

Switch On
Switch Off

2. The Application Shunts must match the chassis ID strapping located on the back of the chassis betweenthe 240A & B cards

NEW SHEET

Designed: 02/19/15 INSTALL GATES, FLASHERS AND CWT AT FORD AVENUE, M.P. 222.57 Rec#: WO#: 27885 IS: /NDR / /NST/JTB	CIRCUIT MODIFICATIONS ARE NOT TO BE MADE WITHOUT AUTHORITY FROM THE OFFICE OF SIGNAL DESIGN	Date: 02/19/15 Des: NST Chk: NDR AFE: 27885	UNION PACIFIC RAILROAD ONE TRACK INTERMEDIATE PANA SUBDIVISION Office of AVP Engineering - Signal Omaha, Nebraska	Sh.: 5 MP: 222.11 ID: 030222211.5S

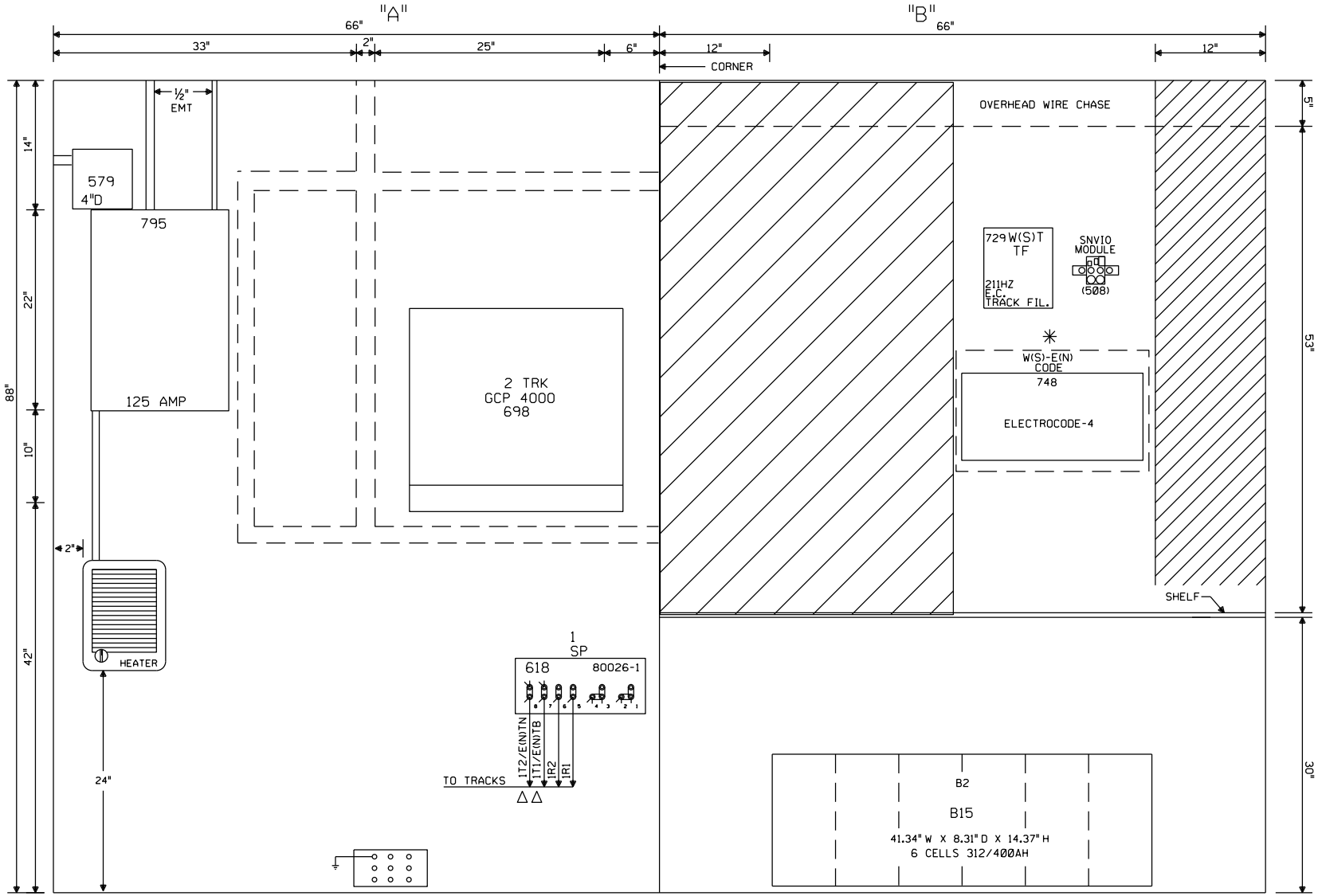

6X6 WAYSIDE/XING HOUSE WITH BLOWER U.P. PART#520-????

✳ = REUSED AND REDRAWN FROM VOIDED SHEET 2

△ = FIELD VERIFY POLARITY

NOTE: ALL DIMENSIONS SHOWN ARE APPROXIMATE.

NEW SHEET

					Designed: 02/19/15 INSTALL GATES, FLASHERS AND CWT AT FORD AVENUE, M.P. 222.57 Rec#: WO#: 27885 IS: /NDR / /NST/JTB	MODIFICATION LEVEL D.A. LAST LEVEL CHECKED DU LAST LEVEL MOD THIS TYPICAL DU LAST LEVEL BY DESIGNER DU CHANGED FROM TYPICAL? Y REV 01.24.11 4K 4TKGFC.8	CIRCUIT MODIFICATIONS ARE NOT TO BE MADE WITHOUT AUTHORITY FROM THE OFFICE OF SIGNAL DESIGN	Date: 02/19/15 Des: NST Chk: NDR AFE: 27885	UNION PACIFIC RAILROAD ONE TRACK INTERMEDIATE PANA SUBDIVISION Office of AVP Engineering - Signal Omaha, Nebraska	Sh.: 6 MP: 222.11 ID: 030222211.6S

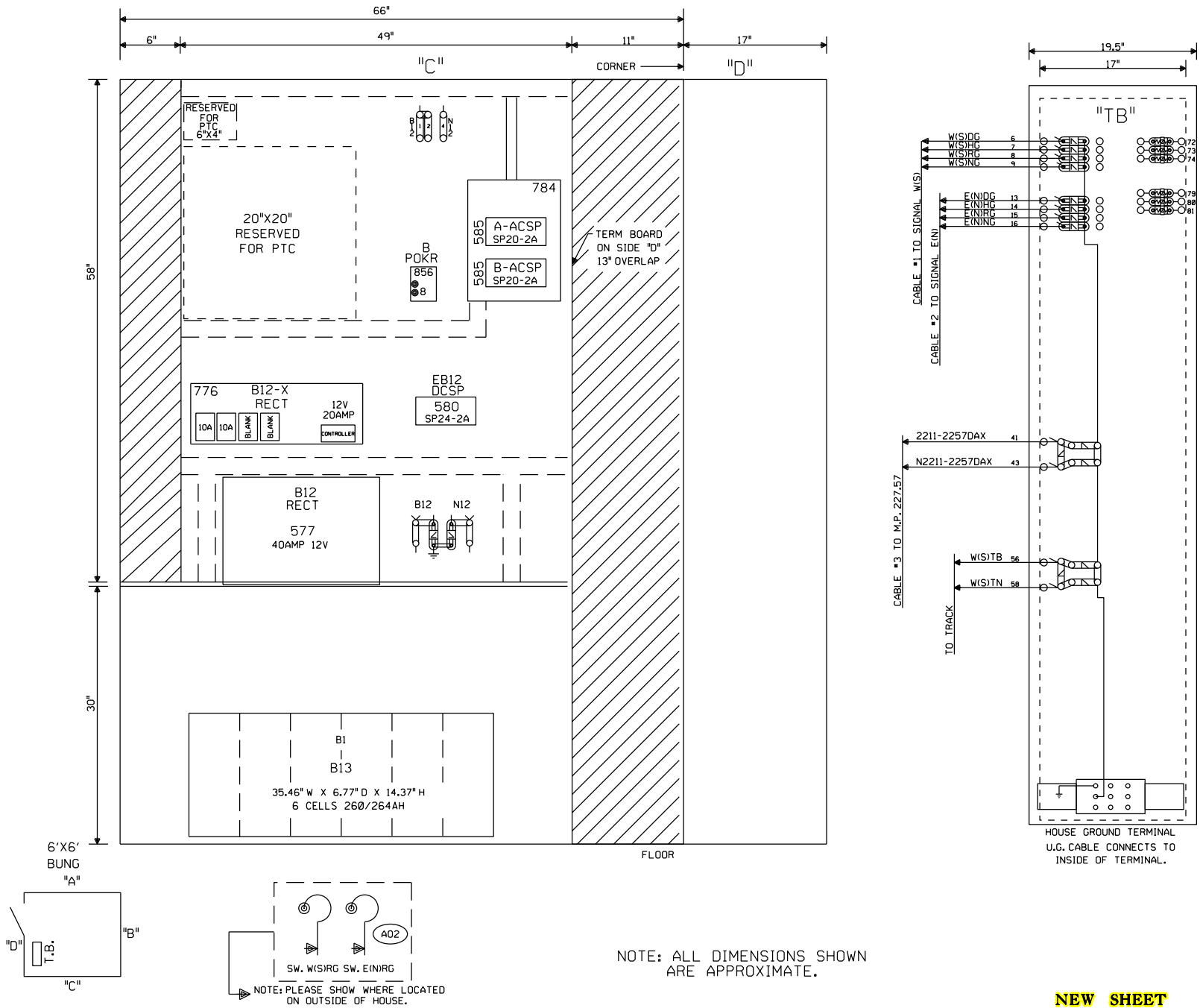

NOTE: ALL DIMENSIONS SHOWN ARE APPROXIMATE.

NEW SHEET

Designed: 02/19/15 INSTALL GATES, FLASHERS AND CWT AT FORD AVENUE, M.P. 222.57 Rec#: WO#: 27885 IS: /NDR /NST/JTB	MODIFICATION LEVEL Q. A. LAST LEVEL CHECKED DU LAST LEVEL MOD THIS TYPICAL DU LAST LEVEL BY DESIGNER DU CHANGED FROM TYPICAL? Y REV 01.24.11 4K GFC.9	CIRCUIT MODIFICATIONS ARE NOT TO BE MADE WITHOUT AUTHORITY FROM THE OFFICE OF SIGNAL DESIGN	Date: 02/19/15 Des: NST Chk: NDR AFE: 27885	UNION PACIFIC RAILROAD ONE TRACK INTERMEDIATE PANA SUBDIVISION Office of AVP Engineering - Signal Omaha, Nebraska	Sh.: 7 MP: 222.11 ID: 030222211.7S		

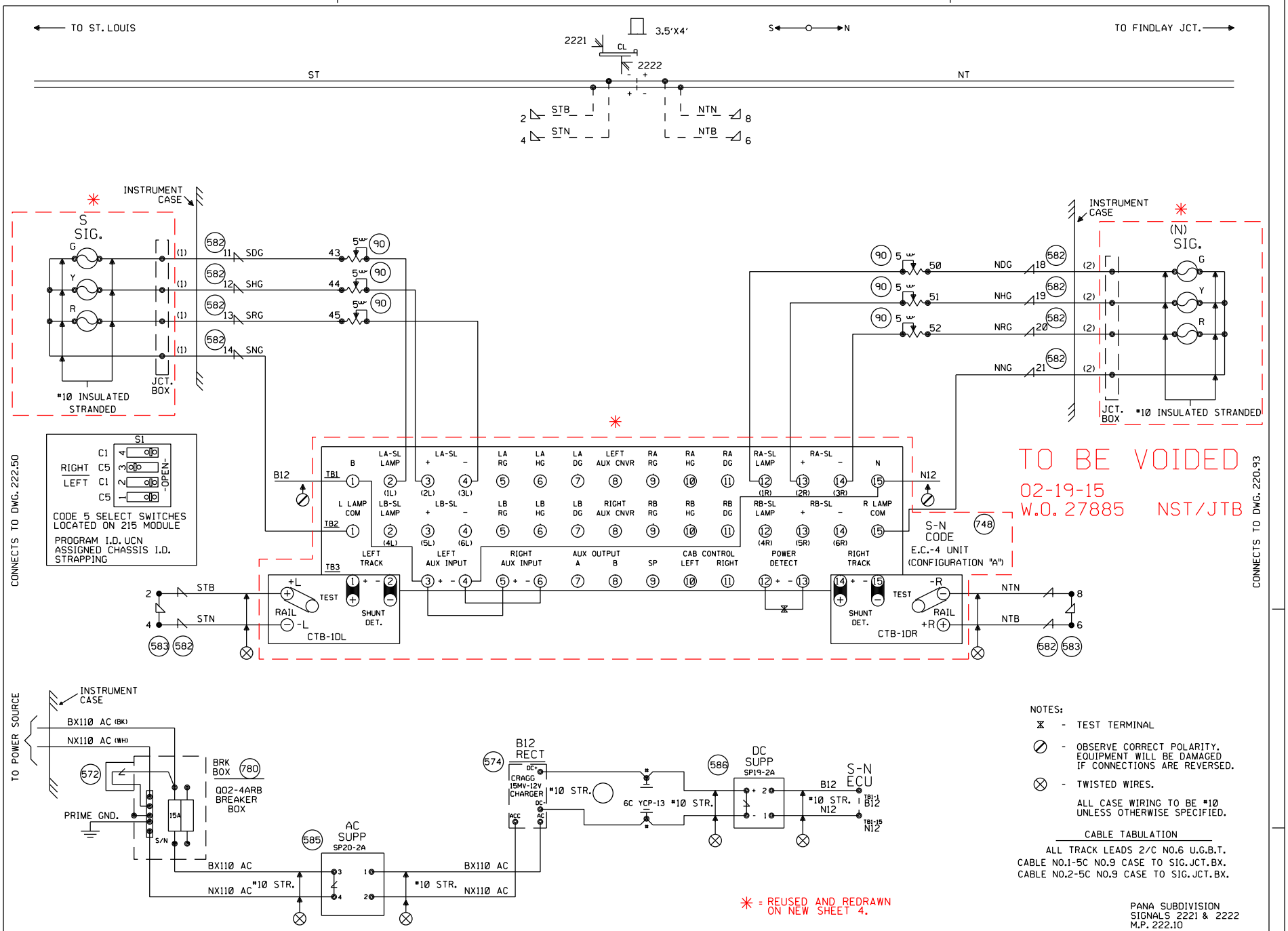

Revised: 03-22-10 SIG. PLATES REVISED PER. FIELD AC	REV 11-14-95 INSTALL E-CODE M.P. 215 TO MP. 231.5 JDB/HAR	CIRCUIT MODIFICATIONS ARE NOT TO BE MADE WITHOUT AUTHORITY FROM THE OFFICE OF SIGNAL DESIGN	DES: DIG: HAR CHK: A.F.E. ID: 030222210.1:1	UNION PACIFIC RAILROAD FINDLAY JCT., ILLINOIS TO ST. LOUIS, MISSOURI C.T.C. CIRCUITS Office of Sr.AVP Engineering - Signal/TCO OMAHA NEBR.	DATE 11-14-95 SHEET 1 OF 2 DWG 222.10 S-302-M
Rec#: 16687 WO#: N/A IS: MJD/WIT/ /					

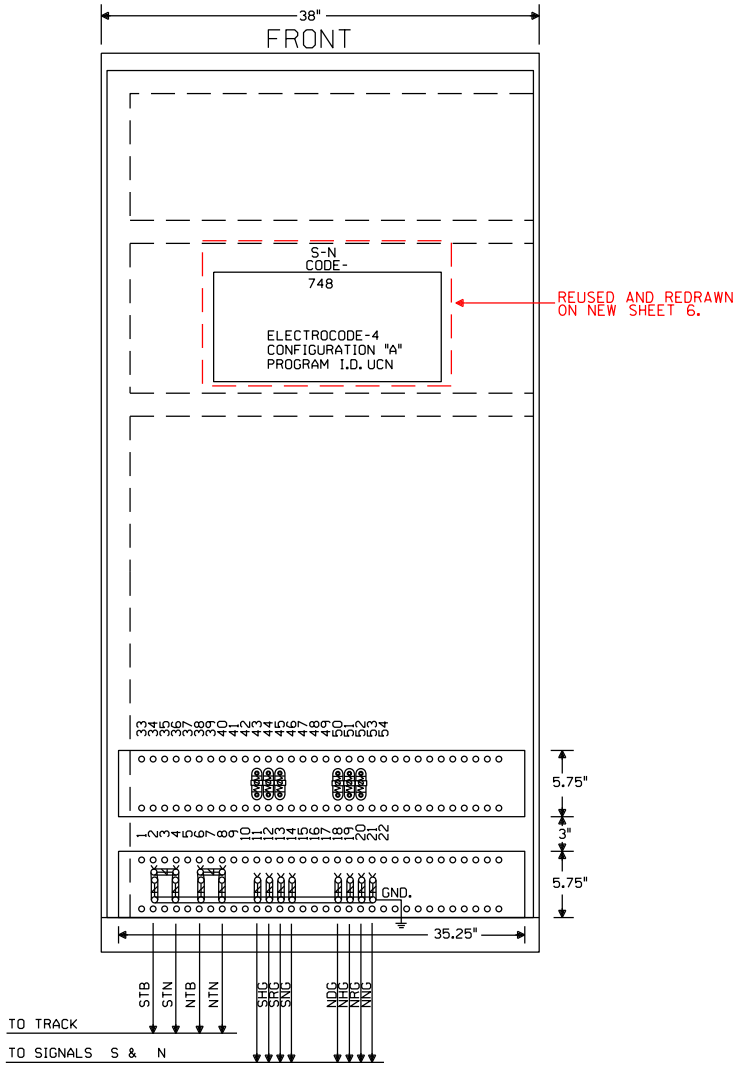

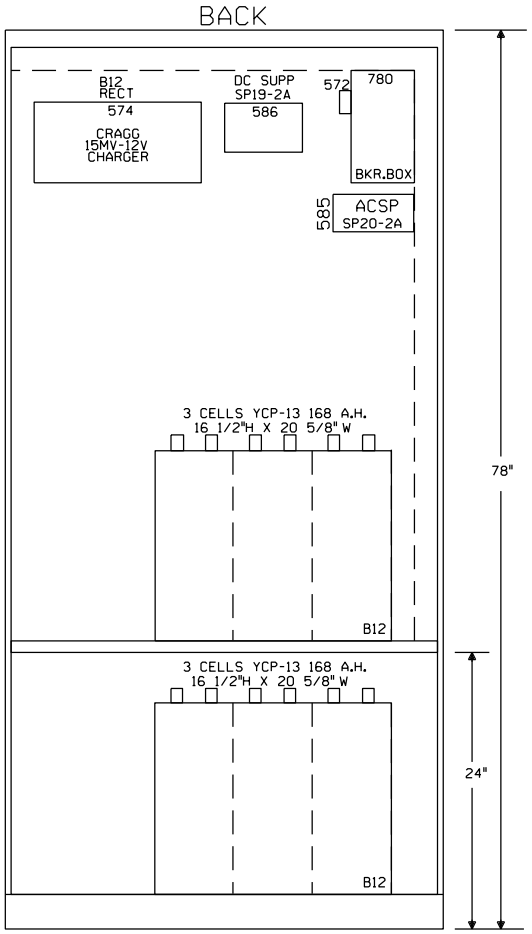

TO BE VOIDED

02-19-15
W.O. 27885 NST/JTB

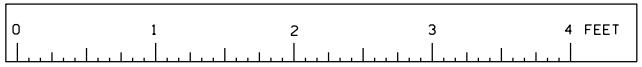

SCALE: 1.5 INCHES = 1 FOOT

PANA SUBDIVISION
SIGNALS 2221 & 2222
M.P. 222.10
SINGLE-FLAT CASE

						Revised: 03-22-10 SIG. PLATES REVISED PER. FIELD AC Rec#: 16687 WO#: N/A IS: MJD/WIT/ /	REV 11-14-95 INSTALL E-CODE M.P. 215 TO MP. 231.5 JDB/HAR	CIRCUIT MODIFICATIONS ARE NOT TO BE MADE WITHOUT AUTHORITY FROM THE OFFICE OF SIGNAL DESIGN	DES: DIG: HAR CHK: A.F.E. ID= 030222210.2:1	UNION PACIFIC RAILROAD FINDLAY JCT., ILLINOIS TO ST. LOUIS, MISSOURI C.T.C. CIRCUITS Office of Sr.AVP Engineering - Signal/TCO OMAHA NEBR.	DATE 11-14-95 SHEET 2 DWG 222.10 S-302-M

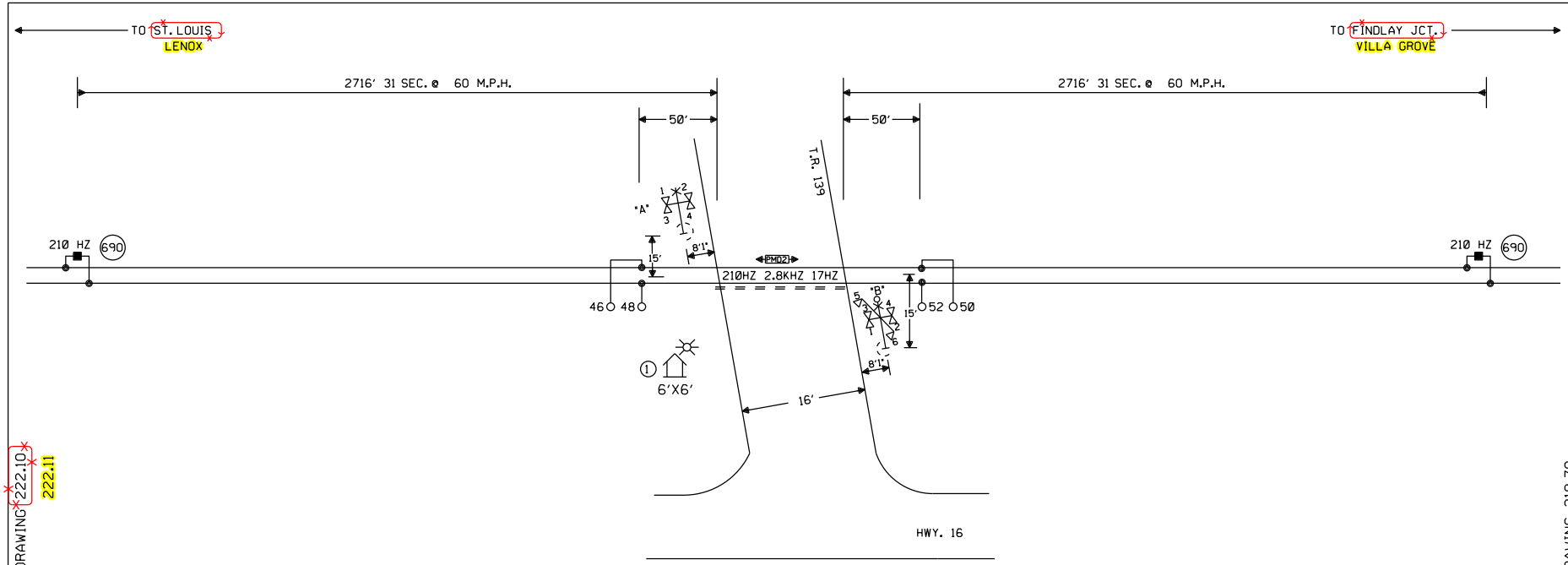

NOTES:

1. CONNECT TO HEAVY DUTY CONTACTS. SHOW CONTACT NUMBERS IF DIFFERENT THAN SHOWN.
2. CONNECT TO REGULAR DUTY CONTACTS. SHOW CONTACT NUMBERS IF DIFFERENT THAN SHOWN.
3. SHOW HEAVY DUTY CONTACTS & RELAY RES. IF DIFFERENT THAN SHOWN.
4. WIRE #16 AWG-1 CONDUCTOR STRANDED S.D. COPPER 19 STRANDS, INSULATED WITH 2/64" ETHYLENE PROPYLENE, 1/64" NEOPRENE JACKET, 10/64" O.D. RATED 300 V. 18A. CASE WIRE.
5. WIRE #12 AWG-1 CONDUCTOR STRANDED S.D. COPPER 19 STRANDS, INSULATED WITH 3/64" ETHYLENE PROPYLENE, 1/64" NEOPRENE JACKET, 14/64" O.D. RATED 600 V. 26A. CASE WIRE.
6. SAME WIRE AS 5 BUT TW. IN PAIRS.
7. ALL WIRES CONNECTED TO BATT. TO BE TW. #10 AWG-1 CONDUCTOR SOLID, S.D. COPPER ANNEALED, INSULATED WITH 2/64" CROSS LINK POLYETHYLENE, TYPE RHH OR RHW U.S.E. 13/64" O.D. RATED 75 DEG.C. WET, 90 DEG.C. DRY, RATED 600V. 42A. BATTERY WIRE.
8. WIRE #10 AWG-1 CONDUCTOR STRANDED S.D. COPPER 19 STRANDS, INSULATED WITH 3/64" ETHYLENE PROPYLENE, 1/64" NEOPRENE JACKET, 1/4" O.D. RATED 600V. 25A. CASE WIRE.
9. SAME WIRE AS 8 BUT TW. IN PAIRS.

⊗ = TWISTED WIRES

= RUN NEG. LEAD FROM RECT. DIRECTLY TO NEG. TERM. OF BATT. RUN POS. LEAD FROM HEEL OF "CHARGE" TEST SW. DIRECTLY TO POS. TERM. OF BATT

⊘ = OBSERVE CORRECT POLARITY. EQUIPMENT WILL BE DAMAGED IF CONNECTIONS ARE REVERSED

ALL TRACK WIRES #6 TW. UNLESS OTHERWISE SPECIFIED

① = HOUSE TO BE 25' FROM NEAR RAIL OF TRACK AND 30' FROM EDGE OF ROADWAY.

△ = TRANSMITTER AND RECEIVER LEADS OF PMD TO BE SEPARATED BY AT LEAST 12" IN TRENCH.

1. SET UP THUMBNAIL ADJUSTMENT ON PMD2 TO PROVIDE TRANSFER TIME OF 5 MINUTES. ISLAND RELATED FAILURE WILL INITIATE TRANSFER INSTANTANEOUSLY.

☼ = POWER OFF INDICATION

2/#6 TO BE USED ON ALL TRACK CONNECTIONS. THE SUM TOTAL OF THE PMD REC. & XMTR. TRACK WIRE LENGTH SHOULD NOT EXCEED 500'.

TOP OF FOUNDATION TO BE AT SAME ELEVATION AS THE SURFACE OF THE TRAVELED WAY & NO MORE THAN 4" ABOVE THE SURFACE OF THE GROUND, WITH CURB TO BE MAXIMUM OF 4" ABOVE CURB.

ALL LIGHTS TO BE 12" ROUNDELS.

= = = : 4" X 21' PIPE

LIGHTS: A 1,2 30°/15°
3,4 70°
B 1,2 30°/15°
3,4,5,6 70°

CONSTRUCTION NOTE:
1. CHANGES TO SHEET 1 ONLY.

GROUNDING LAYOUT

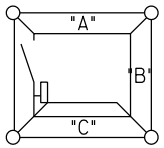

S ⟷ N

= IN
= OUT

Designed: 02/9/15 INSTALL GATES FLASHERS AND CWT AT FORD AVENUE, M.P. 222.57 Rec#: WO#: 27885 IS: /NDR /NST/JTB	CIRCUIT MODIFICATIONS ARE NOT TO BE MADE WITHOUT AUTHORITY FROM THE OFFICE OF SIGNAL DESIGN	REV. 11-14-95 INSTALL E-CODE MP.215 TO 231.5 JDB/HAR	Date: 2-16-88 Des: MNT Chk: JRZ AFE: 62686	UNION PACIFIC RAILROAD NOKOMIS, IL T.R. 139 PANA SUBDIVISION Office of AVP Engineering - Signal Omaha, Nebraska	Sh.: 1 DOT 542150E MP: 220.93 ID: 030222093.1X

1PMDFL.1 7-3-87

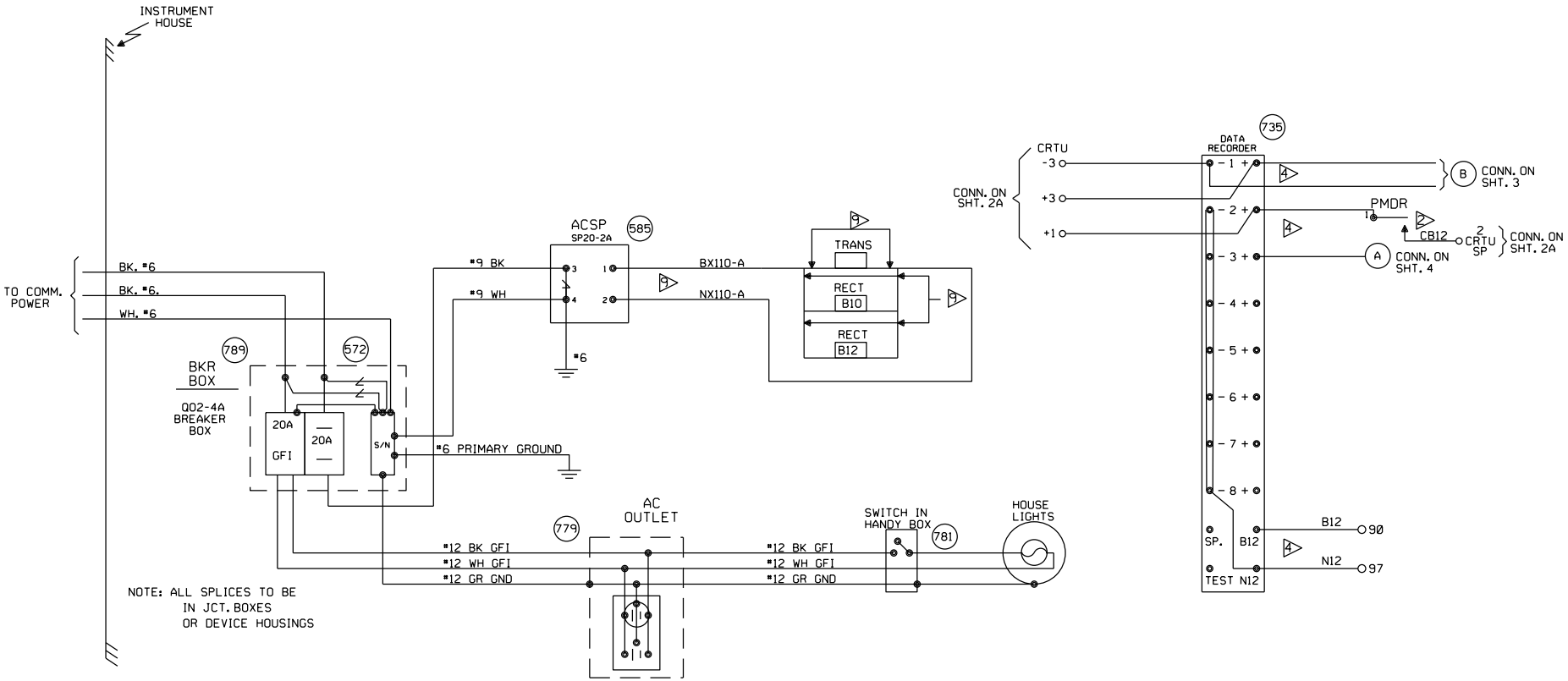

							REV. 10-16-01 ADD CRTU W.O. 3326 6-12-01 CLS/WITT/ /EML	CIRCUIT MODIFICATIONS ARE NOT TO BE MADE WITHOUT AUTHORITY FROM THE OFFICE OF SIGNAL DESIGN	Date: 2-16-88 Des: CDR Chk: CDR AFE: 62686	**UNION PACIFIC RAILROAD** NOKOMIS, IL T.R. 139 PANA SUBDIVISION Office of AVP Engineering - Signal Omaha, Nebraska	Sh.: 2 DOT 542150E MP: 220.93 ID: 030222093.2X

1PMDFL.2 7-3-87

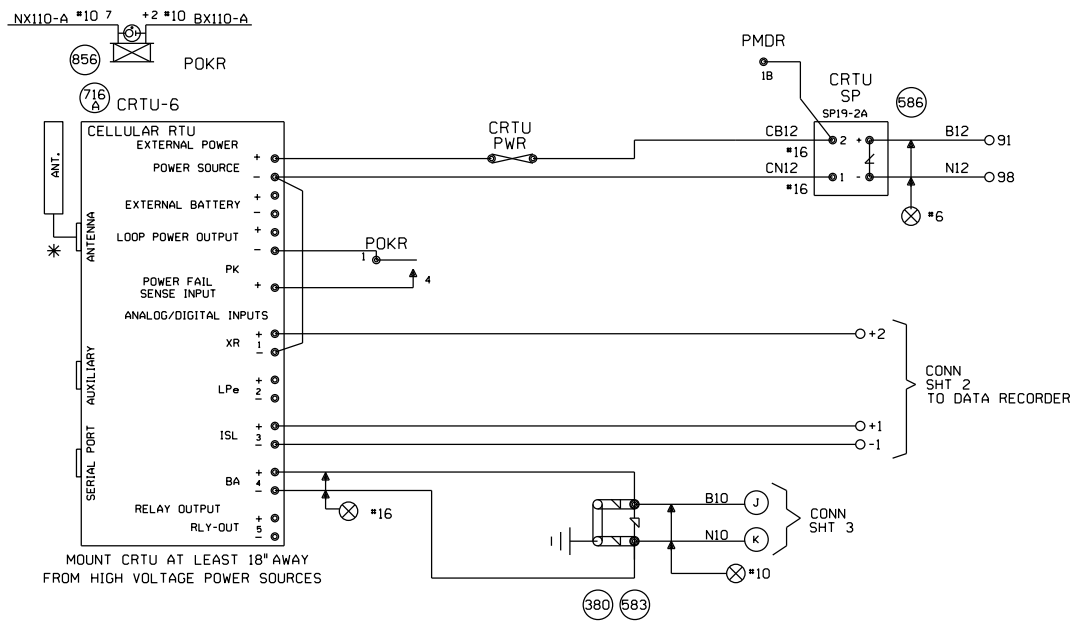

NOTES:

ALL DIODES 1N5060 OR 1N4004 UNLESS OTHERWISE NOTED.
✳ MOUNT ANTENNA ON TOP OF HOUSE.
ALL WIRES #18 UNLESS OTHERWISE NOTED.
ALL UNUSED 'NC' INPUTS MUST BE TIED HIGH TO BATTERY
ALL UNUSED ANALOG INPUTS MUST BE TIED HIGH TO BATTERY
ALL UNUSED 'NO' INPUTS MUST BE DISCONNECTED
NORMAL STATE FOR ANALOG CHANNELS IS EQUAL TO THE STORED NOMINAL VOLTAGE +120% OR -81%
CRTU FRONT PANEL DISPLAY CHART INDICATES NORMAL STATE

■ DIGITAL INPUT HIGH, OR POWER FAIL INPUT CLOSED
□ DIGITAL INPUT LOW, OR POWER FAIL INPUT OPEN

■ L — LATCH IS SET BECAUSE CRTU DETECTED AN ALARM CONDITION
12.06V L

'sRUN MODE' 'sRUN MODE-SILENT'
CRTU RADIO IS DISABLED. REPROGRAM CRTU WITH LAPTOP.

ANALOG AND AC INPUT MODULES MUST BE MOUNTED LESS THAN 12" FROM CRTU

UNIT INSTALLATION AND SETUP

R.R. SITE ID WHERE: SSSS = 4 CHARACTER SUBDIVISION ID. FILL WITH PRECEDING ZEROS AS REQUIRED. THE MAIN TRACK SUBDIVISION ID* IS IN THE CURRENT TIMETABLE. INDUSTRIAL LEADS, LEASED, AND LEAD TRACKS LISTED WITHIN THE SUBDIVISION MAY HAVE THEIR OWN UNIQUE SUBDIVISION ID*. DO NOT AUTOMATICALLY USE THE MAIN TRACK SUBDIVISION ID* FOR THESE OTHER TRACKS. ALWAYS DOUBLE CHECK WITH THE MOST CURRENT PRINTED COPY OF THE TIMETABLE.
LLLLLLLL = 8 CHARACTERS USE DOT* AT CROSSINGS, AND USE MP* AT WAYSIDE AND HBD SITES. FILL WITH PRECEDING DASHES AS REQUIRED.
THE MP* MUST USE A DECIMAL POINT TO SEPARATE NUMBERS.
AA = 2 CHARACTER STATE NAME FOR CROSSINGS.
AA = 'WD' FOR WAYSIDE LOCATIONS, AA = 'HB' FOR HBD SITES.
MUST BE 14 CHARACTERS LONG, NO SPACES ALLOWED.

SITE IDENTIFIER: SSSSLLLLLLLLAA	0044-542150EIL
SIGNAL STRENGTH dBm	
CARRIER ID	532
FIRMWARE VERSION	2.3.06
SERIAL NUMBER	03-02293-0901
CONFIGURATION NET	MICROBURST
SIGNAL STATUS	
SCADANET STATUS	
SILENCE INTERVAL	60 MINUTES
HEALTHCHECK INTERVAL	EVERY 2 DAYS
ALARM DEFER DELAY	240 MINUTES (4 HOURS)
OPERATION TO RESUME:	RUN
CALIBRATION CONSTANT	
CH4	
POWER SOURCE	

FIELD PROVIDES: SAMPLED NOMINAL VOLTAGES, SCADANET STATUS CALIBRATION CONSTANTS, SERIAL NUMBER, AND SIGNAL STATUS.

CHANNEL SETUP - STANDARD CONFIGURATION 15:XR,LPe,ISL,BA

CHANNEL NORMAL STATE	SENSE (NO/NC)	NAME FUNCTION	RECOGNITION DELAY SECONDS ACTIVE	RECOGNITION DELAY SECONDS NORMAL	RETURN TO NORMAL	REPORTING MODE	ALARM LINKED CHANNEL	ALARM LINKED CRITERIA	EVENT LOGGING ENABLED OPTIONS
POWER FAIL (CH5) ■	POWER FAIL DETECT NO	PFin-PK AC POWER FAIL	7,200 ALARM	300 NORMAL	ENABLED	ALERT	DISABLED	N/A	
CH1 □ ■	DIGITAL INPUT NO	CH1-XR XR DOWN TO LONG	1,800 ALARM	1 NORMAL	ENABLED	ALERT	DISABLED	N/A	
CH2 □ ■	DIGITAL INPUT NO	CH2-LPe LIGHT OUT GATE NOT UP/DOWN XING CNTRLR FAILED	120 ALARM	10 NORMAL	ENABLED	ALERT	DISABLED	N/A	
CH3 ■ □	DIGITAL INPUT NC	CH3-ISL ISLAND OCCUPIED DAX, PREEMPT WARNING TIME	1 ACTIVE	1 NORMAL	DISABLED	STATUS ONLY	DISABLED	N/A	DIGITAL EVENTS
CH4 STORED NOMINAL VOLTAGE	ANALOG INPUT N/A	CH4-BA/V BATTERY MONITOR BATTERY LOW	300 ALARM	300 NORMAL	DISABLED	ALERT W/UPDATE	DISABLED	N/A	CH1-XR CH3-ISL
POWER SOURCE (CH6)	ANALOG INPUT N/A	PS-BA/V BATTERY MONITOR BATTERY LOW	300 ALARM	300 NORMAL	DISABLED	ALERT W/UPDATE	DISABLED	N/A	

ANALOG CHANNEL	USEFUL RANGE VOLTS LOW	USEFUL RANGE VOLTS HIGH	DISPLAYED RANGE VOLTS LOW	DISPLAYED RANGE VOLTS HIGH	RELATIVE ALARM POINT LOW	RELATIVE ALARM POINT HIGH	ABSOLUTE ALARM POINT LOW	ABSOLUTE ALARM POINT HIGH	AUTOMATIC UPDATE INTERVAL	STORED NOMINAL VOLTAGE	SAMPLED NOMINAL VOLTAGE
CH4	0.0	30.00	0.0	30.00	81%	120%	10.0	28.0	10 DAYS	12.69	
POWER SOURCE	0.0	30.00	0.0	30.00	81%	120%	10.0	28.0	10 DAYS	12.69	
RELAY OUTPUT	NAME RLY-OUT		ACTIVE SET-UP-OPEN		NORMAL CLR-ON-CLOSE		PULSE DURATION		15 SECONDS	CHARTS REV'D 3-2-01	

MAINTENANCE OPERATIONS

TO START OR ABORT ANY PROCEDURE

1. PRESS THE 'CANCEL' BUTTON FIRST

WHEN RESPONDING TO A CALL, PUT THE CRTU IN THE 'SILENCE ALARMS' MODE

1. PRESS 'SELECT' AND THEN '+ ARROW' BUTTON UNTIL
   DISPLAY: ACTION? SILENCE ALARMS
2. PRESS THE 'SELECT' BUTTON TWICE
3. CORRECT PROBLEM AND SIMULATE NORMAL TRAIN MOVEMENT THROUGH THE LOCATION
4. EXAMINE EACH CHANNEL ON THE CRTU
5. PRESS THE '+/- ARROW' BUTTON
   VERIFY ALL CHANNELS INDICATE A NORMAL STATE
NORMAL STATES ARE ON THE CHANNEL SETUP CHART

CLEAR TIMERS, LATCHES AND SEND ALL NORMAL

1. DO STEPS #1 - #5 ABOVE, AND PRESS 'CANCEL'.
2. PRESS 'SELECT' AND THEN '- ARROW' BUTTON UNTIL
   DISPLAY: ACTION? SERVICE MODE
3. PRESS 'SELECT' AGAIN TO RESET TIMERS, AND IF
   DISPLAY: SERVICE MODE ALL NORMAL
4. PRESS 'SELECT' AGAIN TO CLEAR LATCHES, AND SEND ALL NORMAL, SKIP STEPS #5-#6.
5. HOWEVER, IF ALARMS ARE NOT CLEARED:
   DISPLAY: SERVICE MODE ALARMS PENDING/PRESENT
6. PRESS 'CANCEL', CORRECT PROBLEM AND REPEAT STEPS #2 THRU #5 UNTIL ALL NORMAL SENT.

TO CANCEL THE 'SILENCE ALARMS' MODE

1. PRESS 'SELECT' AND THEN '+ ARROW' BUTTON UNTIL
   DISPLAY: ACTION? CANCEL SILENCE
2. PRESS THE 'SELECT' BUTTON AGAIN

EXAMINE & SET BATTERY VOLTAGE NOMINAL VALUE

1. PRESS THE '+ ARROW' OR '- ARROW' BUTTON UNTIL THE DESIRED CHANNEL IS DISPLAYED.
   DISPLAY: PS-BA: 13.83V NORMAL
2. VERIFY THE DISPLAYED READING WITH A DIGITAL VOLTMETER
3. PRESS THE 'SELECT' BUTTON, AND THE CRTU DISPLAY WILL SWITCH BETWEEN CURRENT/SAVED NOMINAL VOLTAGE VALUES.
   DISPLAY: NOMINAL ON #6? (CURRENT) 13.83
   DISPLAY: SAVED NOMINAL 6 (STORED) 12.69
4. PRESS THE 'SELECT' BUTTON AND THE CURRENT OR 'NOMINAL ON' VALUE WILL BE SAMPLED AND STORED AS THE 'SAVED NOMINAL' VALUE
5. VERIFY THE 'NOMINAL ON' AND 'SAVED NOMINAL' VALUES ARE EQUIVALENT, REPEAT STEPS #1 THRU #3 & PRESS THE 'CANCEL' BUTTON.

REV. 10-16-01
ADD CRTU
W.O. 3326
6-12-01
CLS/WITT/ /EML

MODIFICATION LEVEL	
Q.A. LAST LEVEL CHK'D.	
LAST LEVEL MOD. THIS TYP.	
LAST LEVEL BY DESIGNER.	
CHANGED FROM TYP.? Y/N	

CIRCUIT MODIFICATIONS ARE NOT TO BE MADE WITHOUT AUTHORITY FROM THE OFFICE OF SIGNAL DESIGN

Date:	5-3-01
Des:	EML
Chk:	EML
AFE:	3326

UNION PACIFIC RAILROAD
NOKOMIS, IL
T.R. 139
PANA SUBDIVISION
Office of AVP Engineering - Signal Omaha, Nebraska

Sh.:	2A
DOT	542150E
MP:	220.93
ID:	030222093.2AX

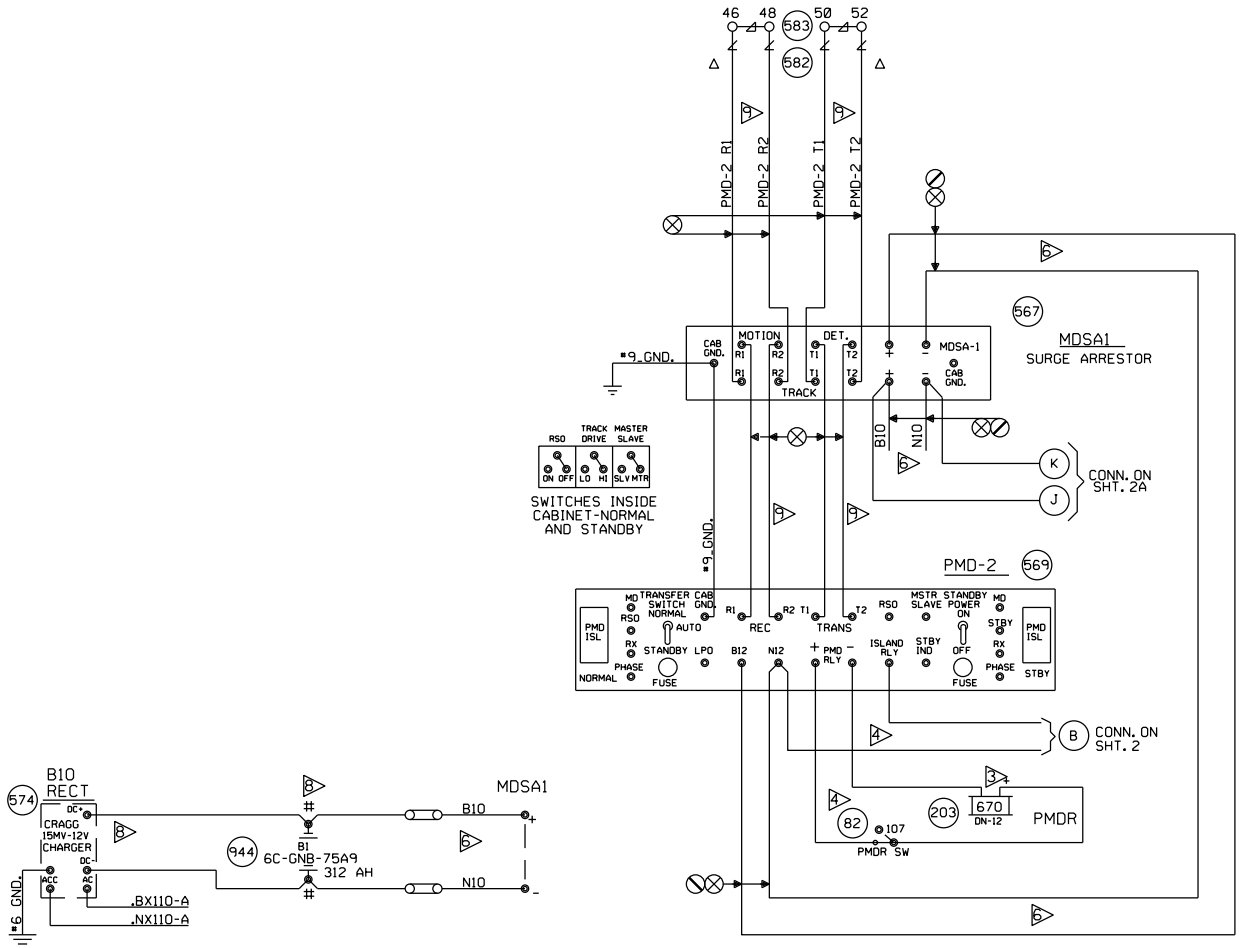

							REV. 10-16-01 ADD CRTU W.O. 3326 6-12-01 CLS/WITT/ /EML	CIRCUIT MODIFICATIONS ARE NOT TO BE MADE WITHOUT AUTHORITY FROM THE OFFICE OF SIGNAL DESIGN	Date: 2-16-88 Des: CDR Chk: CDR AFE: 62686	**UNION PACIFIC RAILROAD** NOKOMIS, IL T.R. 139 PANA SUBDIVISION Office of AVP Engineering - Signal Omaha, Nebraska	Sh.: 3 DOT 542150E MP: 220.93 ID: 030222093.3X

1PMDFL.3 1-6-88

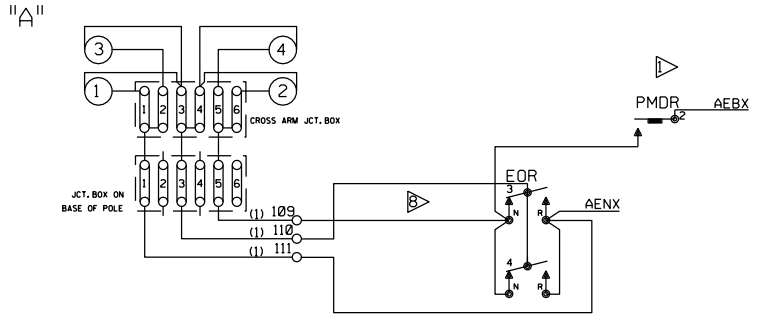

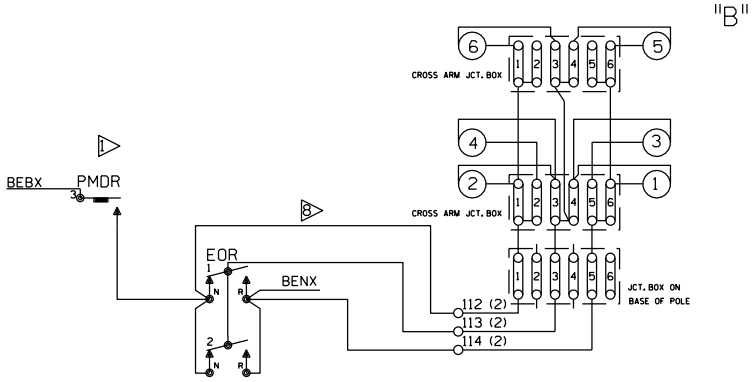

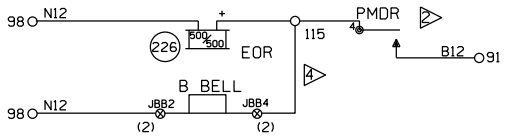

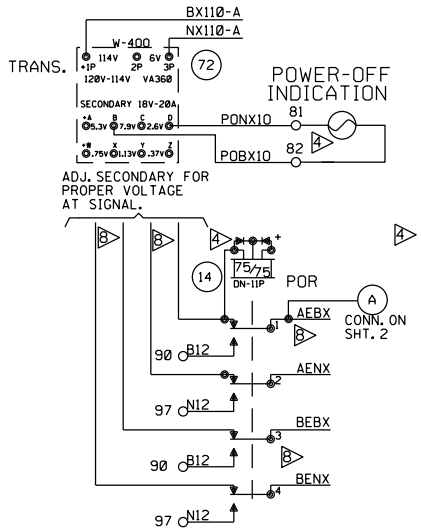

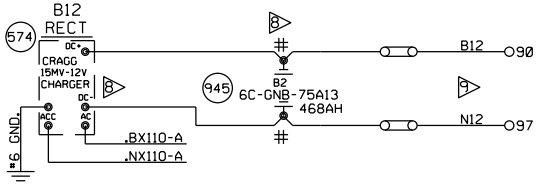

CABLE NO. 1 5C. NO. 9 B.T. TO SIGNAL A
CABLE NO. 2 5C. NO. 9 B.T. TO SIGNAL B

							REV. 10-16-01 ADD CRTU W.O. 3326 6-12-01 CLS/WITT/ /EML	CIRCUIT MODIFICATIONS ARE NOT TO BE MADE WITHOUT AUTHORITY FROM THE OFFICE OF SIGNAL DESIGN	Date: 2-16-88 Des: CDR Chk: CDR AFE: 62686	**UNION PACIFIC RAILROAD** NOKOMIS, IL T.R. 139 PANA SUBDIVISION Office of AVP Engineering - Signal Omaha, Nebraska	Sh.: 4 DOT 542150E MP: 220.93 ID: 030222093.4X

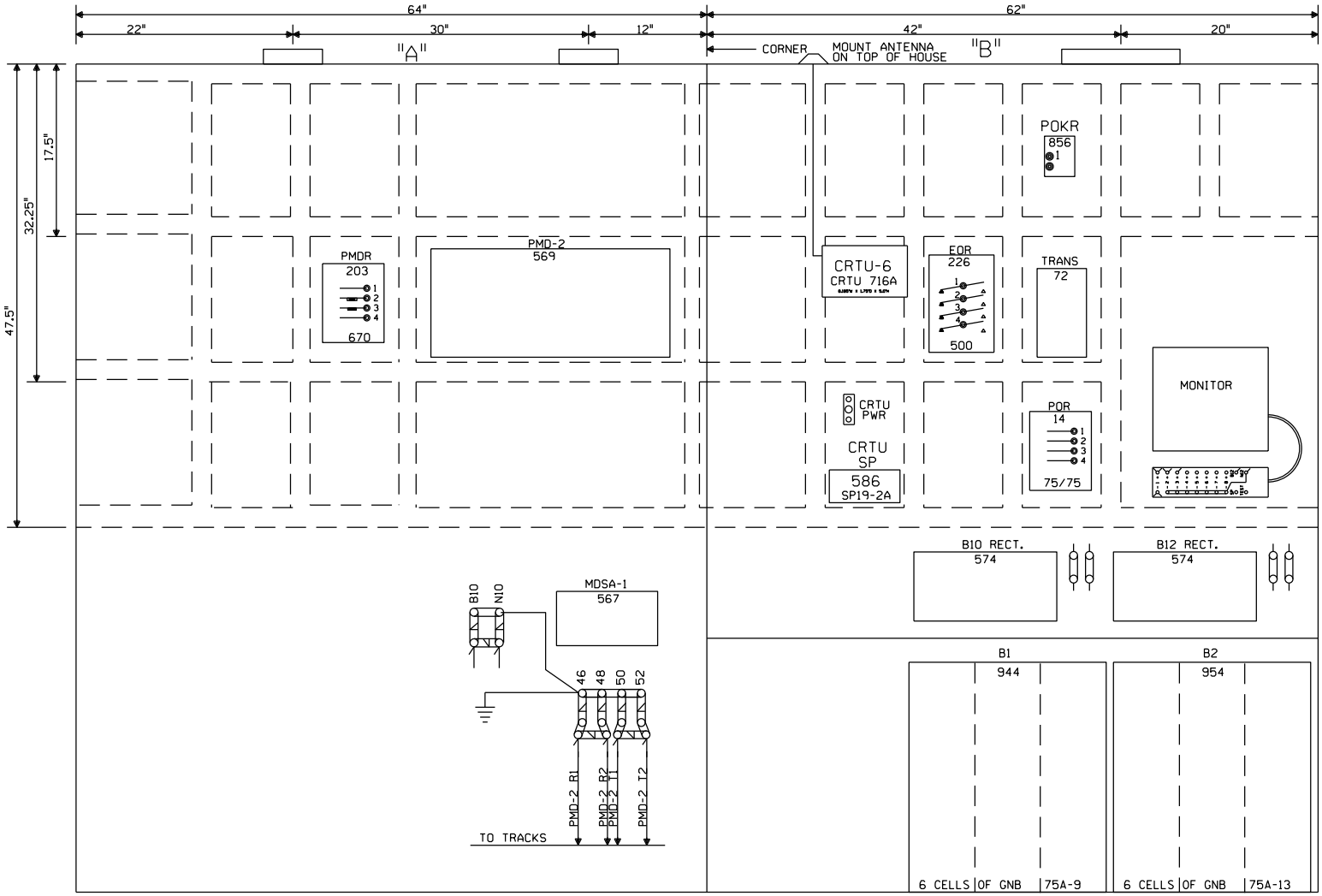

NOTE: ALL DIMENSIONS SHOWN
ARE APPROXIMATE.

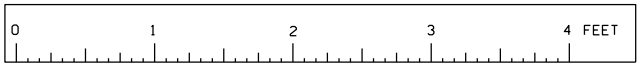

SCALE: 1.5 INCHES = 1 FOOT

							REV. 10-16-01 ADD CRTU W.O. 3326 6-12-01 CLS/WITT/ /EML	CIRCUIT MODIFICATIONS ARE NOT TO BE MADE WITHOUT AUTHORITY FROM THE OFFICE OF SIGNAL DESIGN	Date: 2-16-88 Des: CDR Chk: CDR AFE: 62686	**UNION PACIFIC RAILROAD** NOKOMIS, IL T.R. 139 PANA SUBDIVISION Office of AVP Engineering - Signal Omaha, Nebraska

Sh.:	5
DOT	542150E
MP:	220.93
ID:	030222093.5X

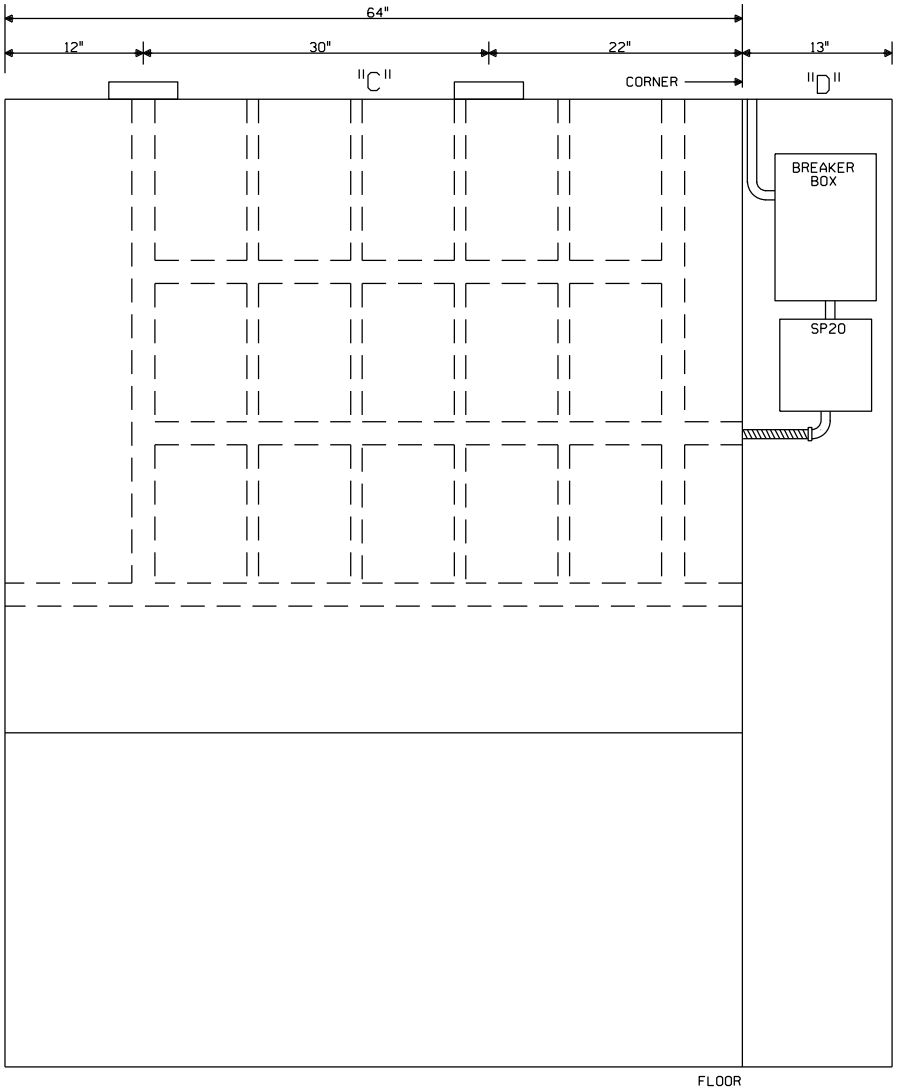

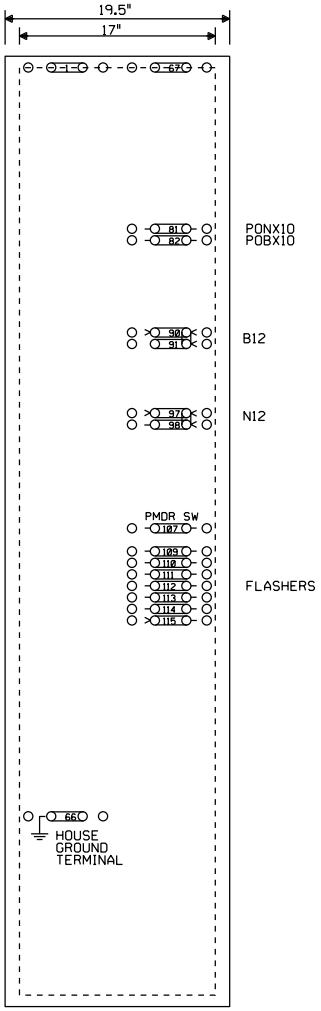

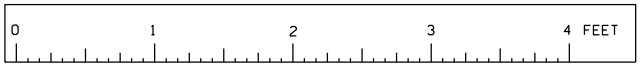

SCALE: 1.5 INCHES = 1 FOOT

							REV. 10-16-01 ADD CRTU W.O. 3326 6-12-01 CLS/WITT/ /EML	CIRCUIT MODIFICATIONS ARE NOT TO BE MADE WITHOUT AUTHORITY FROM THE OFFICE OF SIGNAL DESIGN	Date: 2-16-88 Des: CDR Chk: CDR AFE: 62686	UNION PACIFIC RAILROAD NOKOMIS, IL T.R. 139 PANA SUBDIVISION Office of AVP Engineering - Signal Omaha, Nebraska	Sh.: 6 DOT 542150E MP: 220.93 ID: 030222093.6X

1PMDFL.6 1-7-88