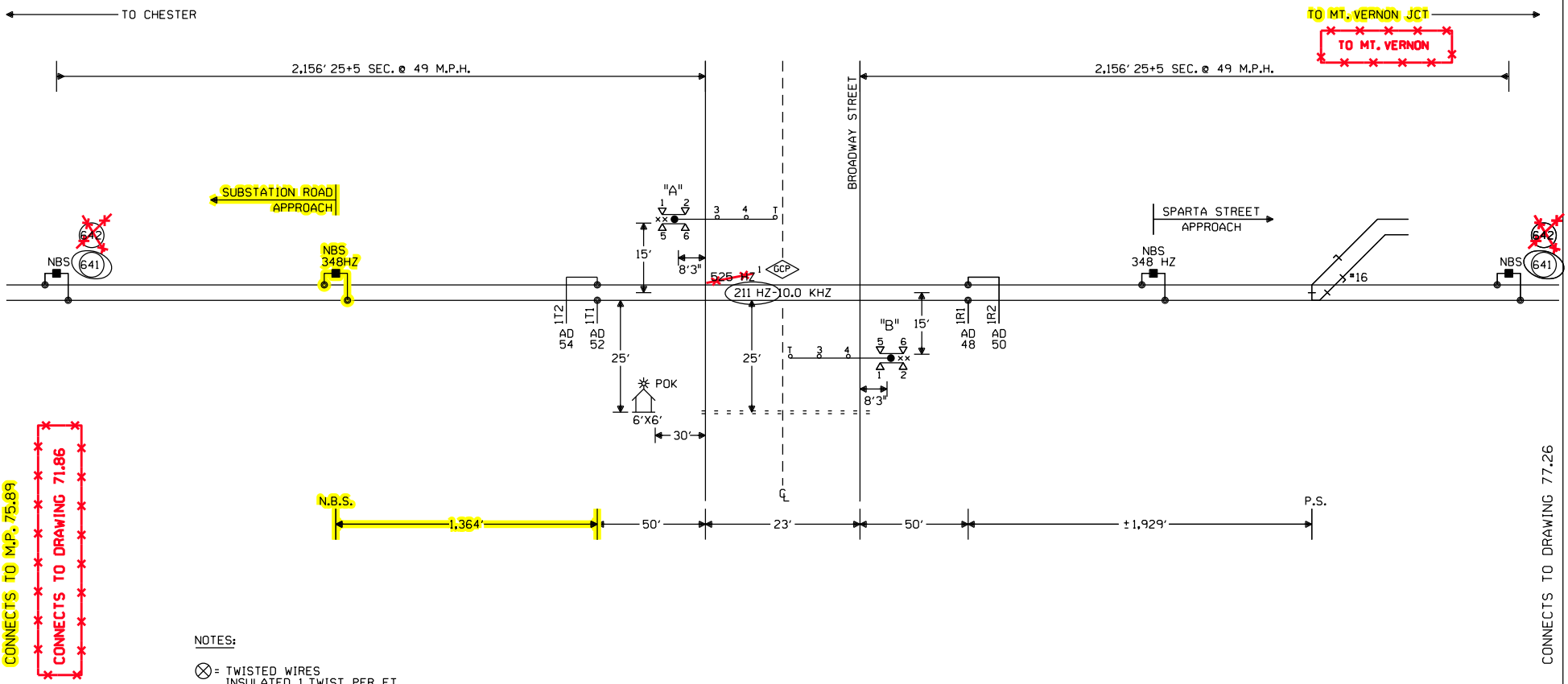

NOTES:

⊗ = TWISTED WIRES
INSULATED 1 TWIST PER FT.
ALL TRACK WIRES 2C. #6

TRANSMITTER AND RECEIVER LEADS TO BE SEPARATED BY AT LEAST 12" IN TRENCH. LENGTHS SHOULD NOT EXCEED MANUFACTURER'S RECOMMENDATION.

TOP OF FOUNDATION TO BE AT SAME ELEVATION AS THE SURFACE OF THE TRAVELED WAY & NO MORE THAN 4" ABOVE THE SURFACE OF THE GROUND.

ALL BUNGALOW WIRING TO BE #16 AWG FLEX UNLESS OTHERWISE SPECIFIED EXCEPT ALL GROUND WIRE TO BE #6 AWG FLEX OR LARGER.

ALL WIRING IN GATE MECHANISM TO BE #10 "AWG FLEX".

REFER TO UP STANDARD DWG FOR BUNGALOW GROUNDING.

ALL LIGHTS TO BE 12" ROUNDELS.

= = = = = = 4" X 40' CONDUIT

LIGHTS: LED LIGHTS

GATE A: 19'
GATE B: 19'

CRTU CELLEMETRY

×× = BELL

WO 27765
= IN
= OUT
= EXISTING
REVISE

S ← → N

STEELEVILLE, ILLINOIS
BROADWAY STREET
M.P. 76.56
PINCKNEYVILLE SUBDIVISION
D.O.T.#431 147P

Designed: 02/09/15
INSTALL FLASHERS, GATES, AND CWT AT M.P. 75.89 SUBSTATION ROAD
PID: 89570 WO#: 27765 /NBT
IS: /
Rec'd: / /CTC /JTB

REV.		
1	09-08-08	INSTALL FLS/GATES & CONSTANT WARNING AT BROADWAY STREET M.P. 76.56 A.F.E. 55539 REC. 15308 02-04-08 JEH/CTC/CTC/RDD RLT

MODIFICATION LEVEL	
Q. A. LAST LEVEL CHECKED	DP
LAST LEVEL MOD THIS TYPICAL	DP
LAST LEVEL BY DESIGNER	DP
CHANGED FROM TYPICAL?	Y

REV 02.26.07 4K ITKBG.1

CIRCUIT MODIFICATIONS ARE NOT TO BE MADE WITHOUT AUTHORITY FROM THE OFFICE OF SIGNAL DESIGN

DES: CTC
DIG: CTC
CHK: RLT
A.F.E. 55539
ID: 12767656.1X

UNION PACIFIC RAILROAD

STEELEVILLE, ILLINOIS
HIGHWAY CROSSING SIGNALS
CONTROL CIRCUITS

Office of Sr AVP Engineering - Signal/TCO Omaha, Nebraska

DATE 02-28-06
SHEET 1
DWG 76.56
S-1276

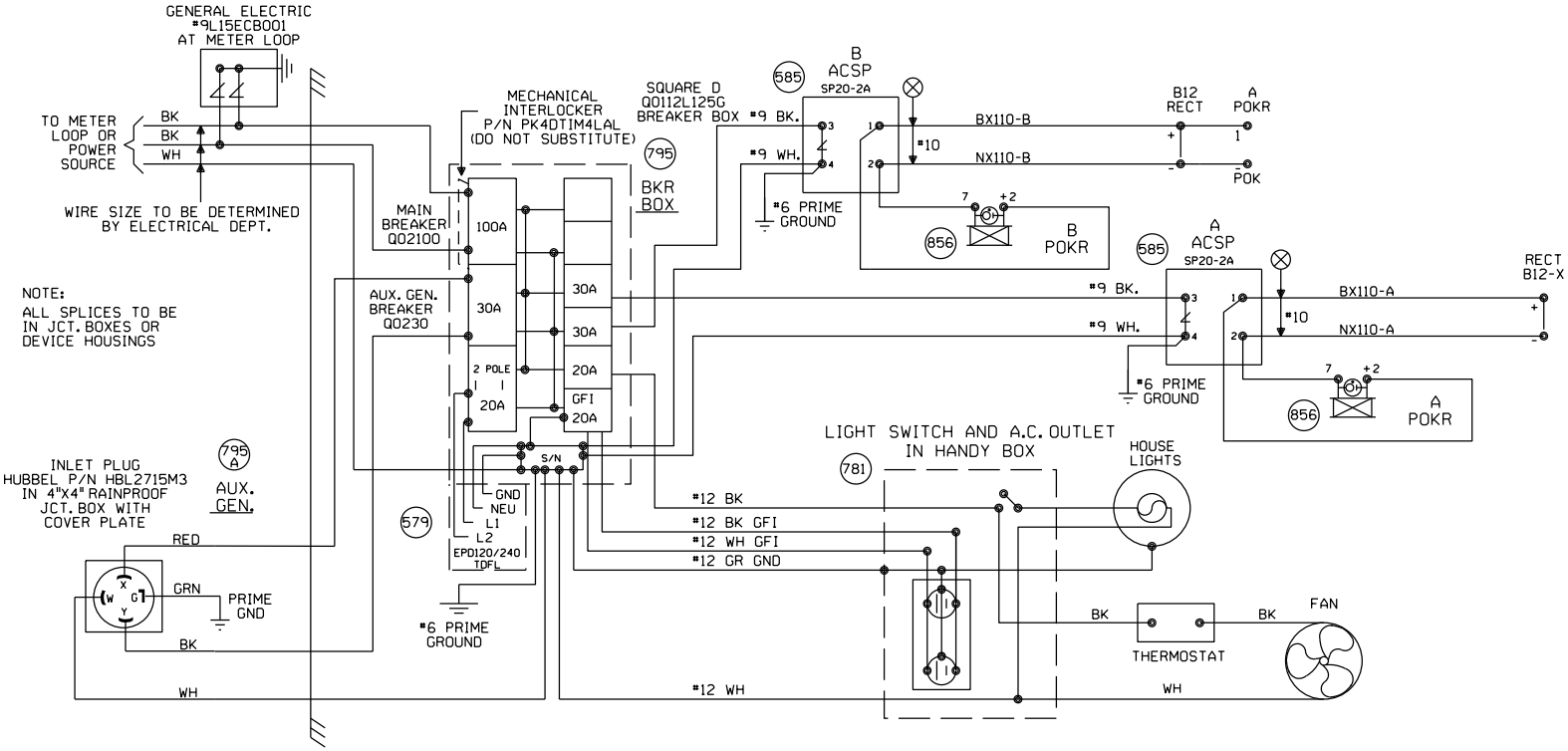

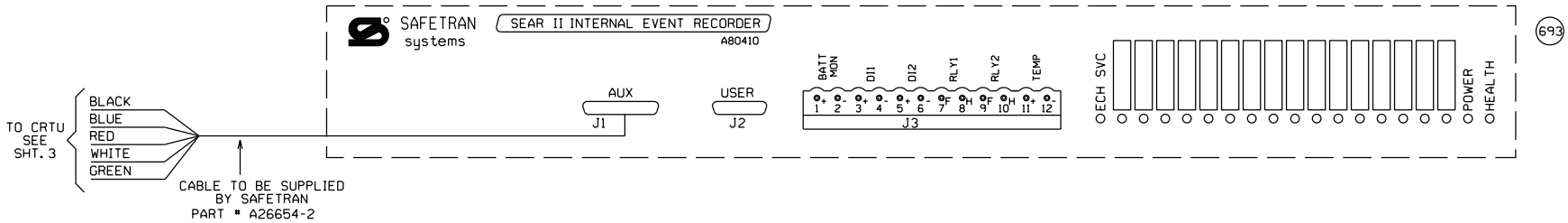

STEELEVILLE, ILLINOIS
BROADWAY STREET
M.P. 76.56
PINCKNEYVILLE SUBDIVISION
D.O.T.#431 147P

1 REV. 09-08-08	MODIFICATION LEVEL		CIRCUIT MODIFICATIONS ARE NOT TO BE MADE WITHOUT AUTHORITY FROM THE OFFICE OF SIGNAL DESIGN	DES: CTC	UNION PACIFIC RAILROAD	DATE 02-28-06
INSTALL FLS/GATES & CONSTANT WARNING AT BROADWAY STREET M.P. 76.56 A.F.E. 55539 REC. 15308 02-04-08 RLT JEH/CTC/CTC/RDD	Q. A. LAST LEVEL CHECKED	DP		DIG: CTC	STEELEVILLE, ILLINOIS	SHEET 2
	LAST LEVEL MOD THIS TYPICAL	DP		CHK: RLT	HIGHWAY CROSSING SIGNALS	DWG 76.56
	LAST LEVEL BY DESIGNER	DP		A.F.E. 55539	CONTROL CIRCUITS	S-1276
	CHANGED FROM TYPICAL? REV 02.26.07 4K SEARAC.2	Y		ID: 12767656.2X	Office of Sr AVP Engineering - Signal/TCO Omaha, Nebraska	

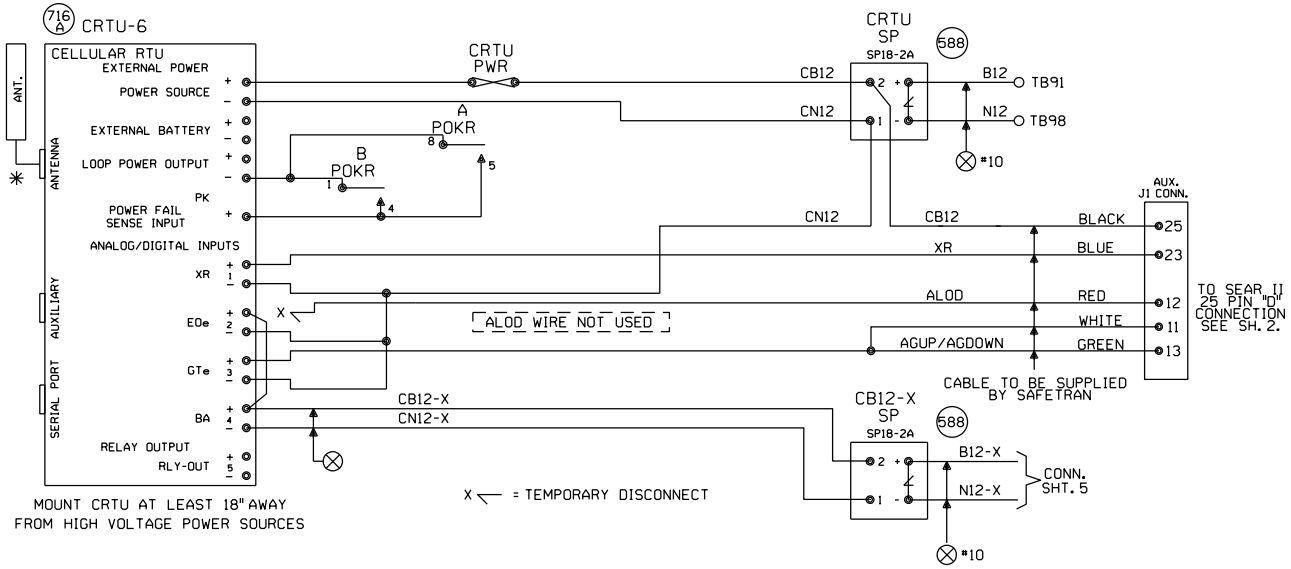

NOTES:

ALL DIODES 1N5060 OR 1N4004 UNLESS OTHERWISE NOTED.

✳ MOUNT ANTENNA ON TOP OF HOUSE.
INSTALL ANTENNA CABLE AND CHOKE PER TECH BULLENTIN #99-0015-00

ALL WIRES #18 UNLESS OTHERWISE NOTED.

ALL UNUSED 'NC' INPUTS MUST BE TIED HIGH TO BATTERY

ALL UNUSED ANALOG INPUTS MUST BE TIED HIGH TO BATTERY

ALL UNUSED 'NO' INPUTS MUST BE DISCONNECTED

NORMAL STATE FOR ANALOG CHANNELS IS EQUAL TO THE STORED NOMINAL VOLTAGE +120% OR -81%

CRTU FRONT PANEL DISPLAY CHART INDICATES NORMAL STATE

■ DIGITAL INPUT HIGH, OR POWER FAIL INPUT CLOSED
□ DIGITAL INPUT LOW, OR POWER FAIL INPUT OPEN

■ L ← LATCH IS SET BECAUSE CRTU DETECTED AN ALARM CONDITION
12.06V L

'sRUN MODE' 'sRUN MODE-SILENT' ← CRTU RADIO IS DISABLED. REPROGRAM CRTU WITH LAPTOP.

ANALOG AND AC INPUT MODULES AND SURGE PROTECTORS MUST BE MOUNTED LESS THAN 18" FROM CRTU

ANALOG MODULES CONVERT DC VOLTAGE TO A SQUARE WAVE. A WORKING ANALOG MODULE WILL HAVE 4.5VDC TO 8.0VDC BETWEEN 5VOUT+ AND 6VOUT-. WHERE, 0VOLTS = 0HZ OUT, 30VOLTS = 10KHZ OUT, AND 15VOLTS = 5KHZ OUT

MAKE SURE CRTU IS PROGRAMMED WITH CALIBRATION SETTINGS.

CRTU CH4 CAN BE CONNECTED TO EITHER SP18 OR EQUIPMENT SIDE OF MDSA1, TAB 565

UNIT INSTALLATION AND SETUP

R.R. SITE ID WHERE: SSSS = 4 CHARACTER SUBDIVISION ID. FILL WITH PRECEDING ZEROS AS REQUIRED. THE MAIN TRACK SUBDIVISION ID* IS IN THE CURRENT TIMETABLE. INDUSTRIAL LEADS, LEASED, AND LEAD TRACKS LISTED WITHIN THE SUBDIVISION MAY HAVE THEIR OWN UNIQUE SUBDIVISION ID*. ALWAYS REFER TO CURRENT PRINTED COPY OF THE TIMETABLE.
LLLLLLLL = 8 CHARACTERS USE DOT* AT CROSSINGS, AND
WDLLLLLL = USE 'WD' THEN MP* AT WAYSIDE LOCATIONS.
EXAMPLE = 0785WD1801.5UT
HBLLLLLL = USE 'HB' THEN MP* AT HBD SITES.
EXAMPLE = 0100-HB55.62TX
THE MP* MUST USE A DECIMAL POINT TO SEPARATE NUMBERS. FILL WITH PRECEDING DASHES AS REQUIRED.
AA = 2 CHARACTER STATE NAME FOR ALL LOCATIONS. MUST BE 14 CHARACTERS LONG, NO SPACES ALLOWED.

SITE IDENTIFIER: SSSSLLLLLLLLLAA	0049-431147PIL
OPERATION TO RESUME:	RUN
SIGNAL STRENGTH dBm	
CARRIER ID	
FIRMWARE VERSION	2.3.
SERIAL NUMBER	
BOOT VERSION:	
CMM VERSION:	
MIN ASSIGNMENT	
ESN: (MICROBURST ONLY)	
CONFIGURATION NET	CELLEMETRY
SILENCE INTERVAL	60 MINUTES
HEALTHCHECK INTERVAL	EVERY 2 DAYS
ALARM DEFER DELAY	240 MINUTES (4 HOURS)
SIGNAL STATUS	
SCADANET STATUS	
CALIBRATION CONSTANT CH1	
CALIBRATION CONSTANT CH2	
CALIBRATION CONSTANT CH3	
CALIBRATION CONSTANT CH4	
CALIBRATION CONSTANT PS	

FIELD PROVIDES: SAMPLED NOMINAL VOLTAGES, SCADANET STATUS CALIBRATION CONSTANTS, SERIAL NUMBER, AND SIGNAL STATUS.

CHANNEL SETUP - STANDARD CONFIGURATION 32:XR,EOe,GTe,Ba

CHANNEL NORMAL STATE	SENSE (NO/NC)	NAME FUNCTION	RECOGNITION DELAY SECONDS ACTIVE	RECOGNITION DELAY SECONDS NORMAL	RETURN TO NORMAL	REPORTING MODE	ALARM LINKED CHANNEL	ALARM LINKED CRITERIA
POWER FAIL (CH5) ■	POWER FAIL DETECT NO	PF1n-PK AC POWER FAIL	7,200 ALARM	300 NORMAL	ENABLED	ALERT	DISABLED	N/A
CH1 ■ □	DIGITAL INPUT NC	CH1-XR XR DOWN TO LONG	1,800 ALARM	1 NORMAL	ENABLED	ALERT	DISABLED	N/A
CH2 □ ■	DIGITAL INPUT NO	CH2-EOe LIGHT OUT	120 ALARM	10 NORMAL	ENABLED	ALERT	DISABLED	N/A
CH3 □ ■	DIGITAL INPUT NO	CH3-GTe GATES NOT UP/DOWN	120 ALARM	10 NORMAL	ENABLED	ALERT	DISABLED	N/A
CH4 STORED NOMINAL VOLTAGE	ANALOG INPUT N/A	CH4-Ba/V BATTERY MONITOR BATTERY LOW	600 ALARM	1200 NORMAL	ENABLED	ALERT W/UPDATE	DISABLED	N/A
POWER SOURCE (CH6)	ANALOG INPUT N/A	PS-Ba/V BATTERY MONITOR BATTERY LOW	600 ALARM	1200 NORMAL	ENABLED	ALERT W/UPDATE	DISABLED	N/A

EVENT LOGGING ENABLED OPTIONS

ANALOG VALUE SENT

DIGITAL EVENTS

PF1n-PK
CH1-XR
CH2-EOe
CH3-GTe

ANALOG CHANNEL	USEFUL RANGE VOLTS LOW	USEFUL RANGE VOLTS HIGH	DISPLAYED RANGE VOLTS LOW	DISPLAYED RANGE VOLTS HIGH	RELATIVE ALARM POINT LOW	RELATIVE ALARM POINT HIGH	ABSOLUTE ALARM POINT LOW	ABSOLUTE ALARM POINT HIGH	AUTOMATIC UPDATE INTERVAL	STORED NOMINAL VOLTAGE	SAMPLED NOMINAL VOLTAGE
CH4	0.0	30.00	0.0	30.00	81%	120%	10.0	29.0	14 DAYS	12.69	
POWER SOURCE	0.0	30.00	0.0	30.00	81%	120%	10.0	29.0	14 DAYS	12.69	
RELAY OUTPUT	NAME RLY-OUT		ACTIVE SET-UP-OPEN		NORMAL CLR-DN-CLOSE		PULSE DURATION		15 SECONDS	StdCfg Ver: 2.3.3 REV'D 9-20-02	

MAINTENANCE OPERATIONS

TO START OR ABORT ANY PROCEDURE

1. PRESS THE 'CANCEL' BUTTON FIRST

WHEN RESPONDING TO A CALL, PUT THE CRTU IN THE 'SILENCE ALARMS' MODE

1. PRESS 'SELECT' AND THEN '+ ARROW' BUTTON UNTIL
   DISPLAY: ACTION?
   SILENCE ALARMS
2. PRESS THE 'SELECT' BUTTON TWICE
3. CORRECT PROBLEM AND SIMULATE NORMAL TRAIN MOVEMENT THROUGH THE LOCATION
4. EXAMINE EACH CHANNEL ON THE CRTU
5. PRESS THE '+/- ARROW' BUTTON
   VERIFY ALL CHANNELS INDICATE A NORMAL STATE
   NORMAL STATES ARE ON THE CHANNEL SETUP CHART

CLEAR TIMERS, LATCHES AND SEND ALL NORMAL

1. DO STEPS #1 - #5 ABOVE, AND PRESS 'CANCEL'.
2. PRESS 'SELECT' AND THEN '- ARROW' BUTTON UNTIL
   DISPLAY: ACTION?
   SERVICE MODE
3. PRESS 'SELECT' AGAIN TO RESET TIMERS, AND IF
   DISPLAY: SERVICE MODE
   ALL NORMAL
4. PRESS 'SELECT' AGAIN TO CLEAR LATCHES, AND SEND ALL NORMAL, SKIP STEPS #5-#6.
5. HOWEVER, IF ALARMS ARE NOT CLEARED:
   DISPLAY: SERVICE MODE
   ALARMS PENDING/PRESENT
6. PRESS 'CANCEL', CORRECT PROBLEM AND REPEAT STEPS #2 THRU #5 UNTIL ALL NORMAL SENT.

TO CANCEL THE 'SILENCE ALARMS' MODE

1. PRESS 'SELECT' AND THEN '+ ARROW' BUTTON UNTIL
   DISPLAY: ACTION?
   CANCEL SILENCE
2. PRESS THE 'SELECT' BUTTON AGAIN

EXAMINE & SET BATTERY VOLTAGE NOMINAL VALUE

1. PRESS THE '+ ARROW' OR '- ARROW' BUTTON UNTIL THE DESIRED CHANNEL IS DISPLAYED.
   DISPLAY: PS-BA:
   13.83V NORMAL
2. VERIFY THE DISPLAYED READING WITH A DIGITAL VOLTMETER
3. PRESS THE 'SELECT' BUTTON, AND THE CRTU DISPLAY WILL SWITCH BETWEEN CURRENT/SAVED NOMINAL VOLTAGE VALUES.
   DISPLAY: NOMINAL ON #6? (CURRENT)
   13.83
   DISPLAY: SAVED NOMINAL 6 (STORED)
   12.69
4. PRESS THE 'SELECT' BUTTON AND THE CURRENT OR 'NOMINAL ON' VALUE WILL BE SAMPLED AND STORED AS THE 'SAVED NOMINAL' VALUE
5. VERIFY THE 'NOMINAL ON' AND 'SAVED NOMINAL' VALUES ARE EQUIVALENT, REPEAT STEPS #1 THRU #3 & PRESS THE 'CANCEL' BUTTON.

STEELEVILLE, ILLINOIS
BROADWAY STREET
M.P. 76.56
PINCKNEYVILLE SUBDIVISION
D.O.T.#431 147P

REV.		
1	09-08-08	INSTALL FLS/GATES & CONSTANT WARNING AT BROADWAY STREET M.P. 76.56 A.F.E. 55539 REC. 15308 02-04-08 RLT JEH/CTC/CTC/RDD

MODIFICATION LEVEL	
Q.A. LAST LEVEL CHK'D.	DJ
LAST LEVEL MOD. THIS TYP.	DJ
LAST LEVEL BY DESIGNER.	DP
CHANGED FROM TYP.? Y/N	Y

CIRCUIT MODIFICATIONS ARE NOT TO BE MADE WITHOUT AUTHORITY FROM THE OFFICE OF SIGNAL DESIGN

DES: CTC
DIG: CTC
CHK: RLT
A.F.E. 55539
ID: 12767656.3X

UNION PACIFIC RAILROAD

STEELEVILLE, ILLINOIS
HIGHWAY CROSSING SIGNALS
CONTROL CIRCUITS

Office of Sr AVP Engineering - Signal/TCO Omaha, Nebraska

DATE 02-28-06
SHEET 3
DWG 76.56
S-1276

(REV.06.01.04) (CRTUCFG32-2BAT.3)

4-15-26-36

Minimum Program Steps Report

Location and SIN

DOT Number: 431147P
Milepost Number: 76.56
Site Name: STEELEVILLE, IL

SIN: 700000000000 *

* Parameter is part of office check number calculation.

MCF and Template Selection

MCF Name: GCP-T6X-01-2.mcf
MCF Revision: 012
MCFCRC: 0DFE7A0C

Template = 1A:6 Trk Bi *

* Parameter is part of office check number calculation.

Minimum Program Steps

TEMPLATE: track 1-Bi, Island
Track 1 : GCP Frequency = 525 Hz
Track 1 : Approach Distance = 2156 ft See Plans
Track 1 : Prime Warning Time = 25 sec *
Track 1 : GCP Transmit Level = Medium Set in Field
Track 1 : Isl Frequency = 10.0 kHz

TEMPLATE: AND 1 XR
AND 1 Enable Used = Yes *

TEMPLATE: IP assignment 1
IN 1.2 = Out Of Service IP 1 *

TEMPLATE: IP assignment SSCC
IN 7.1 = AND 1 XR Enable *

GCP: track 1
Track 1 : Island Distance = 123 ft *

ADVANCED: out of service
OOS Control = OOS IPs *

* Parameter is part of office check number calculation.

Check Numbers

Office Check Number: 7A6C899B
Config. Check Number: 232377FF
(Based on MCF Revision 012)

Parameters not part of office check number calculation:

Track 1 : GCP Frequency = 525 Hz
Track 1 : Approach Distance = 2156 ft See Plans
Track 1 : GCP Transmit Level = Medium Set in Field
Track 1 : Isl Frequency = 10.0 kHz

Comments

<none>

Configuration Package File

Filename: 12767656_431147P.pac
Path: Z:\Awaiting W.O. Approvals\up06027\GCP Program\
Date/Time:

STEELEVILLE, ILLINOIS
BROADWAY STREET
M.P. 76.56
PINCKNEYVILLE SUBDIVISION
D.O.T.#431 147P

				1 REV. 09-08-08 INSTALL FLS/GATES & CONSTANT WARNING AT BROADWAY STREET M.P. 76.56 A.F.E. 55539 REC 15308 02-04-08 RLT JEH/CTC/CTC/RDD	**NOTE: Actual OFFSET and ISLAND distances must be entered by field personnel.**	CIRCUIT MODIFICATIONS ARE NOT TO BE MADE WITHOUT AUTHORITY FROM THE OFFICE OF SIGNAL DESIGN	DES: CTC DIG: CTC CHK: RLT A.F.E. 55539 ID= 12767656.4AX	**UNION PACIFIC RAILROAD** STEELEVILLE, ILLINOIS HIGHWAY CROSSING SIGNALS CONTROL CIRCUITS Office of Sr AVP Engineering - Signal/TCO Omaha, Nebraska	DATE 02-28-06 SHEET 4A DWG 76.56 S-1276

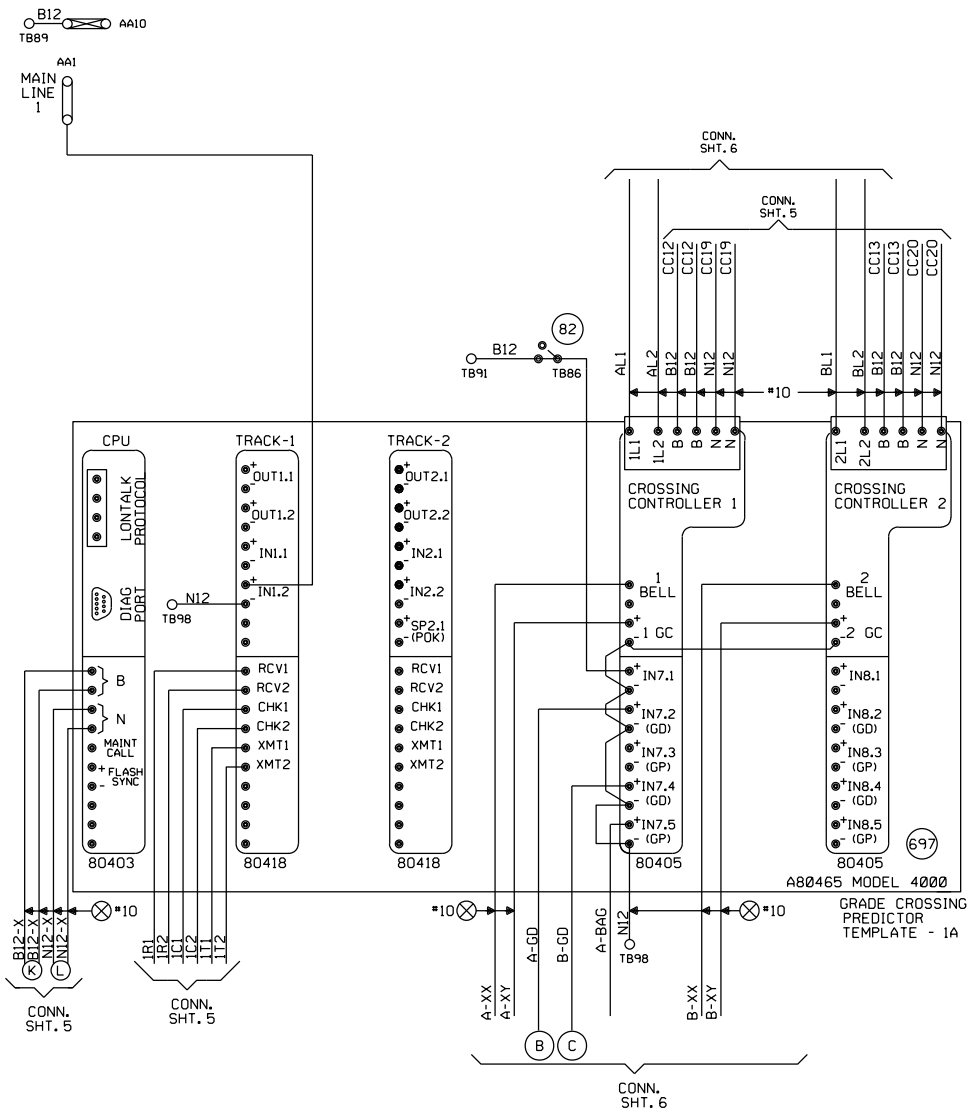

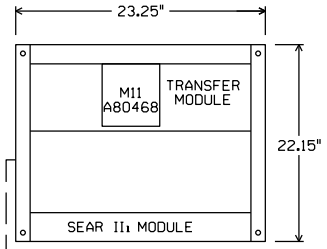

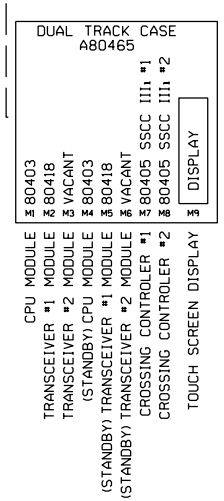

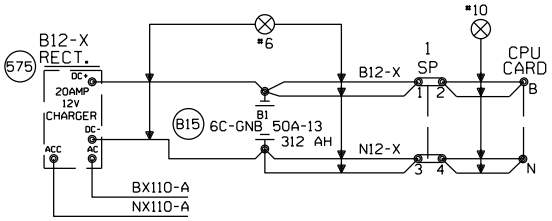

"Mf" FREQUENCY (HZ)	MAXIMUM TRANSMIT WIRE LENGTH (FEET)
86	100
114	125
156	150
211	200
285-970	250

NOTE:
EACH TRANSMITTER TO RAIL WIRE FROM XMT1 AND XMT2 MUST NOT EXCEED THE MAXIMUM LENGTH SPECIFIED IN THE TABLE SHOWN. THE RECEIVER WIRE LENGHT IS NOT CRITICAL. DOES NOT APPLY TO 6 TRACK WIRE APPLICATION.

STEELEVILLE, ILLINOIS
BROADWAY STREET
M.P. 76.56
PINCKNEYVILLE SUBDIVISION
D.O.T.#431 147P

REV.	DATE	DESCRIPTION
1	09-08-08	INSTALL FLS/GATES & CONSTANT WARNING AT BROADWAY STREET M.P. 76.56 A.F.E. 55539 REC. 15308 02-04-08 JEH/CTC/CTC/RDD RLT

MODIFICATION LEVEL	
O. A. LAST LEVEL CHECKED	DP
LAST LEVEL MOD THIS TYPICAL	DP
LAST LEVEL BY DESIGNER	DP
CHANGED FROM TYPICAL?	Y
REV 02.26.07 4K 2TKGF.3	

CIRCUIT MODIFICATIONS ARE NOT TO BE MADE WITHOUT AUTHORITY FROM THE OFFICE OF SIGNAL DESIGN

DES: CTC
DIG: CTC
CHK: RLT
A.F.E. 55539
ID: 12767656.4X

UNION PACIFIC RAILROAD

STEELEVILLE, ILLINOIS
HIGHWAY CROSSING SIGNALS
CONTROL CIRCUITS

Office of Sr AVP Engineering - Signal/TCO Omaha, Nebraska

DATE 02-28-06
SHEET 4
DWG 76.56
S-1276

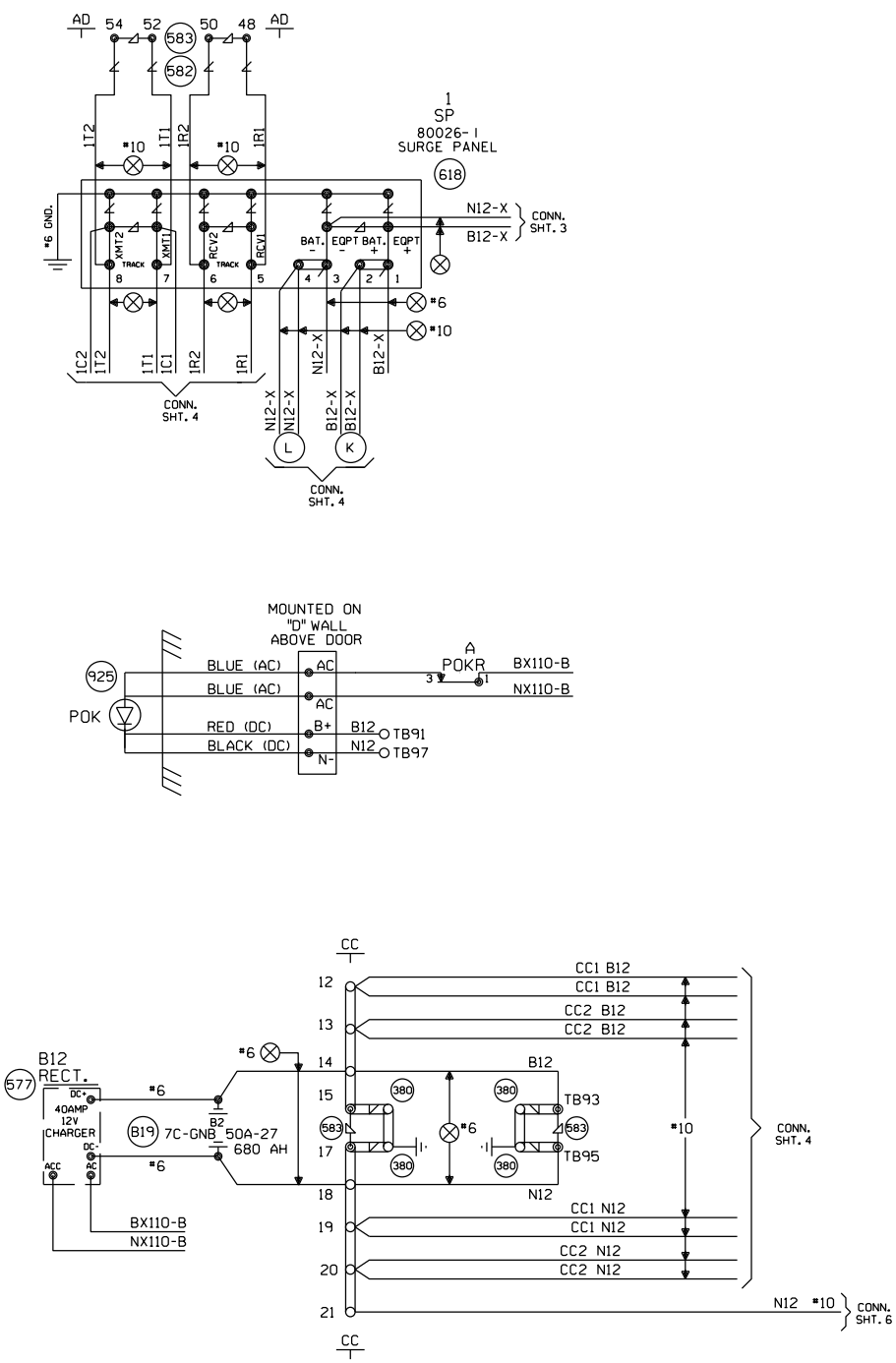

STEELEVILLE, ILLINOIS
BROADWAY STREET
M.P. 76.56
PINCKNEYVILLE SUBDIVISION
D.O.T.#431 147P

1 REV. 09-08-08 INSTALL FLS/GATES & CONSTANT WARNING AT BROADWAY STREET M.P. 76.56 A.F.E. 55539 REC. 15308 02-04-08 RLT JEH/CTC/CTC/RDD	MODIFICATION LEVEL		CIRCUIT MODIFICATIONS ARE NOT TO BE MADE WITHOUT AUTHORITY FROM THE OFFICE OF SIGNAL DESIGN	DES: CTC DIG: CTC CHK: RLT A.F.E. 55539 ID: 12767656.5X	UNION PACIFIC RAILROAD STEELEVILLE, ILLINOIS HIGHWAY CROSSING SIGNALS CONTROL CIRCUITS Office of Sr AVP Engineering - Signal/TCO Omaha, Nebraska	DATE 02-28-06 SHEET 5 DWG 76.56 S-1276
	Q. A. LAST LEVEL CHECKED	DP				
	LAST LEVEL MOD THIS TYPICAL	DP				
	LAST LEVEL BY DESIGNER	DP				
	CHANGED FROM TYPICAL?	Y				
	REV 02.26.07 4K 4TKSPGFC.4					

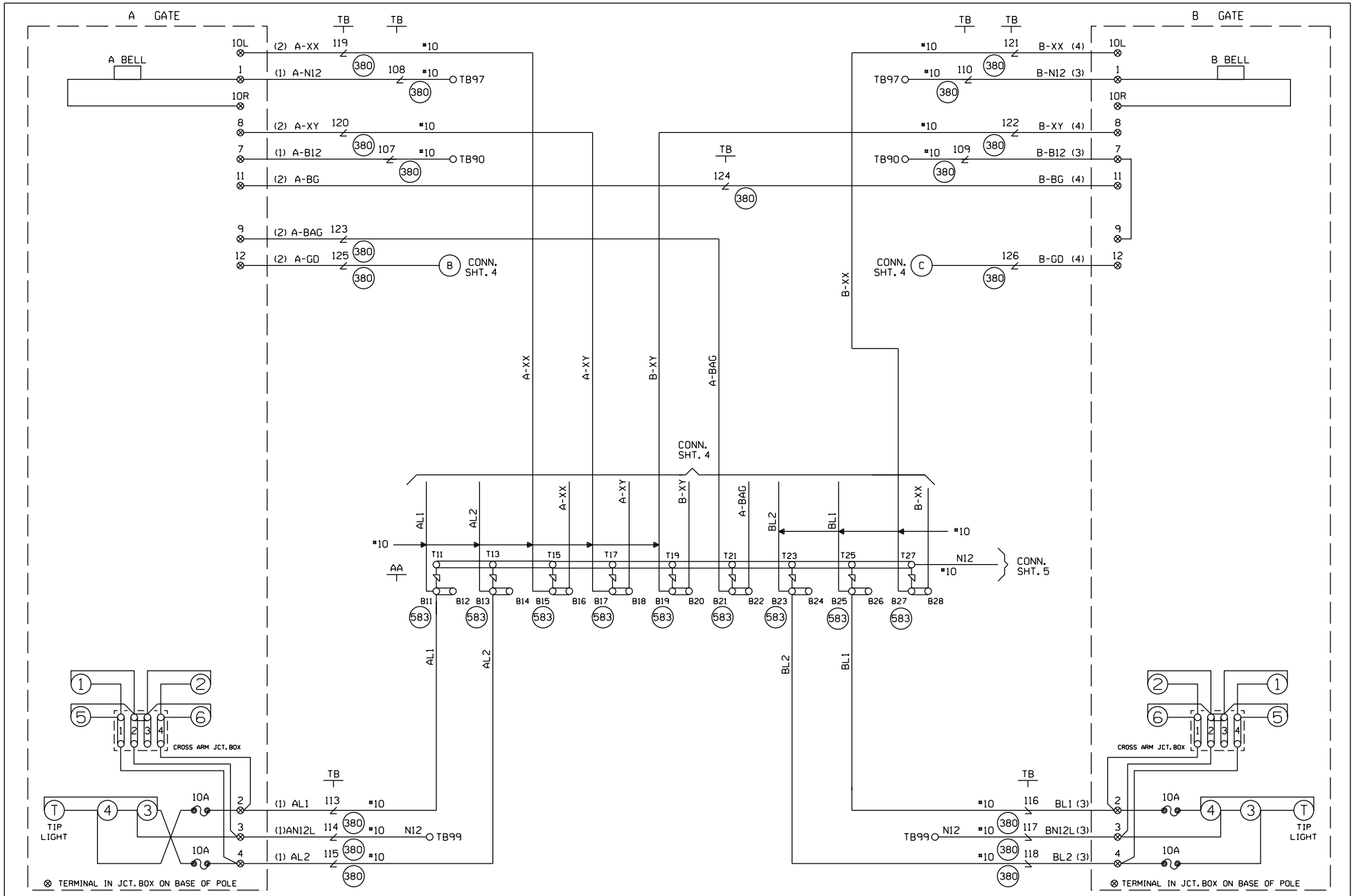

CABLE TABULATION

CABLE NO. 1 5C. NO.6 U.G.B.T.
CABLE NO. 2 7C. NO.14 U.G.B.T.
CABLE NO. 3 5C. NO.6 U.G.B.T.
CABLE NO. 4 7C. NO.14 U.G.B.T.

STEELEVILLE, ILLINOIS
BROADWAY STREET
M.P. 76.56
PINCKNEYVILLE SUBDIVISION
D.O.T.#431 147P

1 REV.	09-08-08
INSTALL FLS/GATES & CONSTANT WARNING AT BROADWAY STREET M.P. 76.56 A.F.E. 55539 REC. 15308 02-04-08	RLT
	JEH/CTC/CTC/RDD

MODIFICATION LEVEL	
Q. A. LAST LEVEL CHECKED	DP
LAST LEVEL MOD THIS TYPICAL	DP
LAST LEVEL BY DESIGNER	DP
CHANGED FROM TYPICAL?	Y
REV 02.26.07 4K GFCTYP.5	

CIRCUIT MODIFICATIONS ARE NOT TO BE MADE WITHOUT AUTHORITY FROM THE OFFICE OF SIGNAL DESIGN

DES: CTC
DIG: CTC
CHK: RLT
A.F.E. 55539
ID= 12767656.6X

UNION PACIFIC RAILROAD

STEELEVILLE, ILLINOIS
HIGHWAY CROSSING SIGNALS
CONTROL CIRCUITS

Office of Sr AVP Engineering - Signal/TCO Omaha, Nebraska

DATE 02-28-06
SHEET 6
DWG 76.56
S-1276

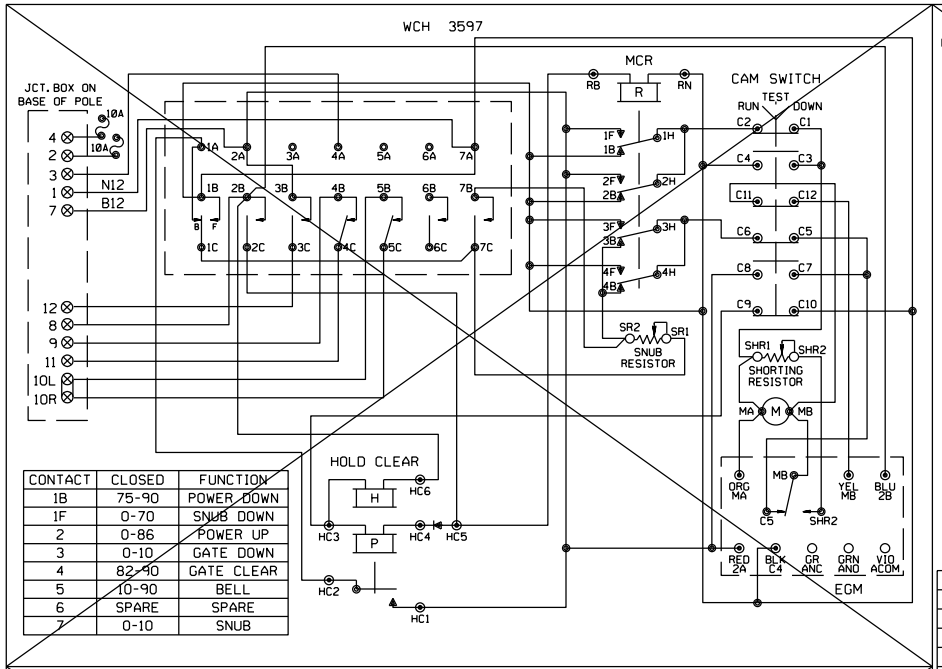

CONTACT	CLOSED	FUNCTION
1B	75-90	POWER DOWN
1F	0-70	SNUB DOWN
2	0-86	POWER UP
3	0-10	GATE DOWN
4	82-90	GATE CLEAR
5	10-90	BELL
6	SPARE	SPARE
7	0-10	SNUB

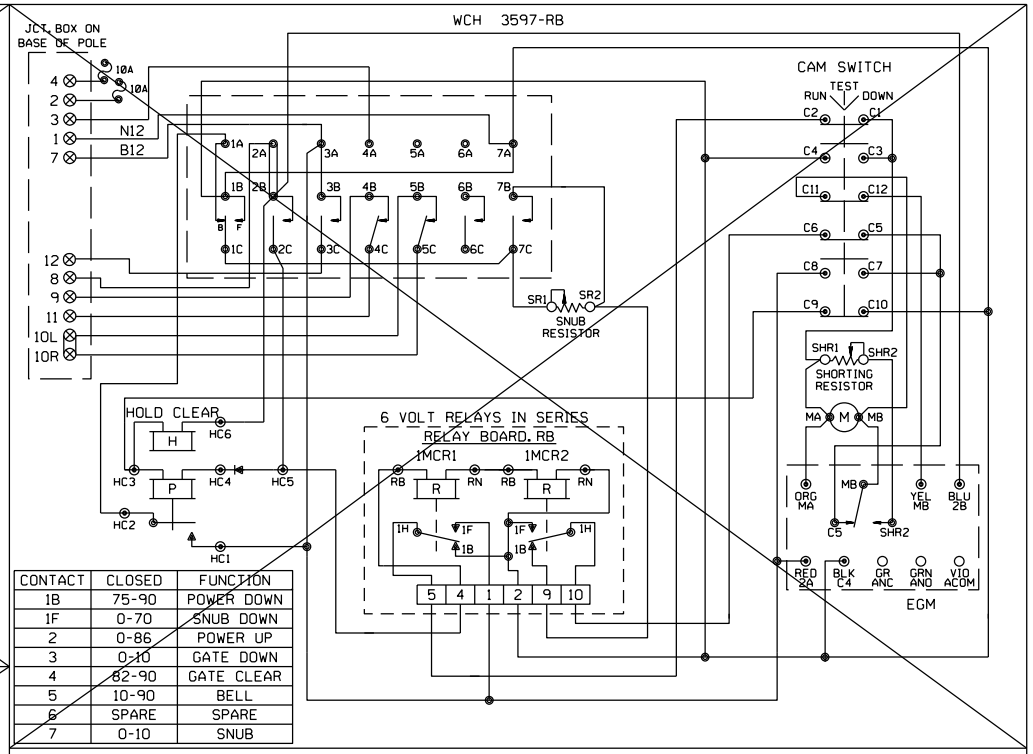

CONTACT	CLOSED	FUNCTION
1B	75-90	POWER DOWN
1F	0-70	SNUB DOWN
2	0-86	POWER UP
3	0-10	GATE DOWN
4	82-90	GATE CLEAR
5	10-90	BELL
6	SPARE	SPARE
7	0-10	SNUB

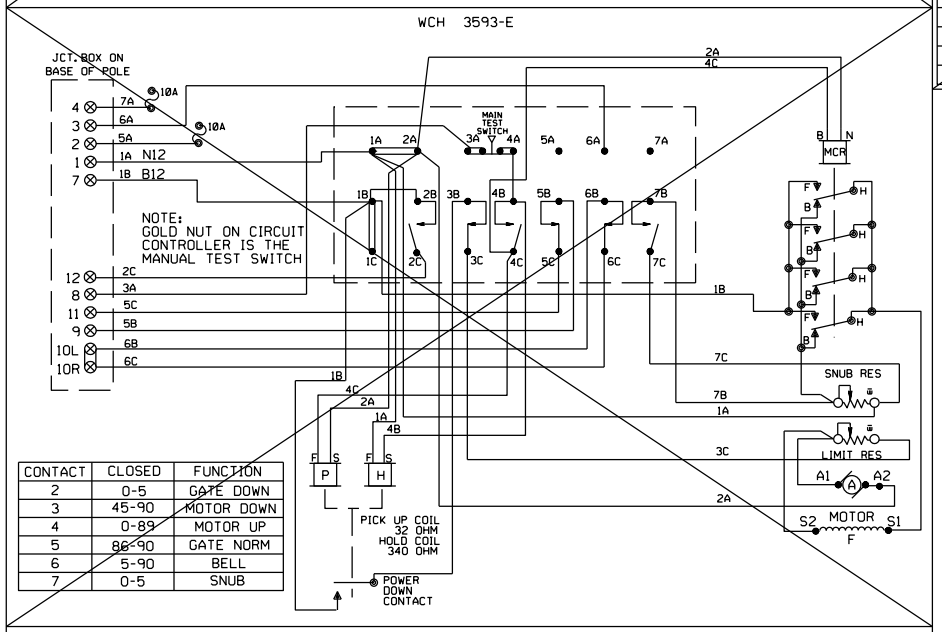

CONTACT	CLOSED	FUNCTION
2	0-5	GATE DOWN
3	45-90	MOTOR DOWN
4	0-89	MOTOR UP
5	86-90	GATE NORM
6	5-90	BELL
7	0-5	SNUB

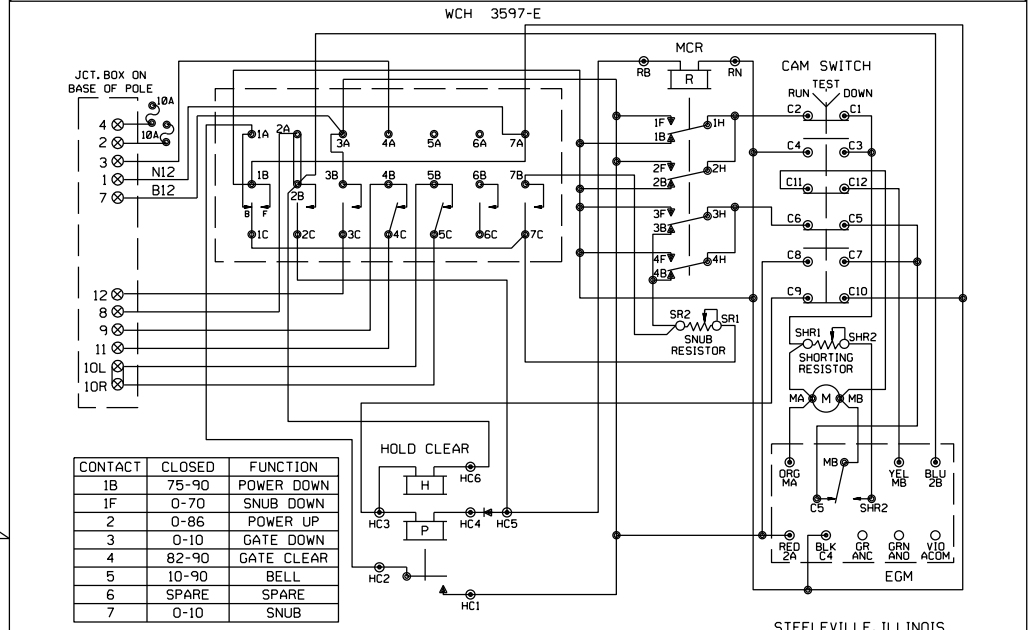

CONTACT	CLOSED	FUNCTION
1B	75-90	POWER DOWN
1F	0-70	SNUB DOWN
2	0-86	POWER UP
3	0-10	GATE DOWN
4	82-90	GATE CLEAR
5	10-90	BELL
6	SPARE	SPARE
7	0-10	SNUB

ALL MECHANISMS SHOWN IN THE CLEAR POSITION

JCT. BOX ON BASE POLE

L	R	L	R
1		7	
2		8	
3		9	
4		10	
5		11	
6		12	

INSTALLED

STEELEVILLE, ILLINOIS
BROADWAY STREET
M.P. 76.56
PINCKNEYVILLE SUBDIVISION
D.O.T.#431 147P

REV.		
1	09-08-08	INSTALL FLS/GATES & CONSTANT WARNING AT BROADWAY STREET M.P. 76.56 A.F.E. 55539 REC. 15308 02-04-08 JEH/CTC/CTC/RDD RLT

MODIFICATION LEVEL	
Q. A. LAST LEVEL CHECKED	D0
LAST LEVEL MOD THIS TYPICAL	D0
LAST LEVEL BY DESIGNER	D0
CHANGED FROM TYPICAL?	N

REV 02.01.08 4K GWIRING.DGN

CIRCUIT MODIFICATIONS ARE NOT TO BE MADE WITHOUT AUTHORITY FROM THE OFFICE OF SIGNAL DESIGN

DES: CTC
DIG: CTC
CHK: RLT
A.F.E. 55539
ID= 12767656.7X

UNION PACIFIC RAILROAD

STEELEVILLE, ILLINOIS
HIGHWAY CROSSING SIGNALS
CONTROL CIRCUITS

Office of Sr AVP Engineering - Signal/TCO Omaha, Nebraska

DATE 02-28-06
SHEET 7
DWG 76.56
S-1276

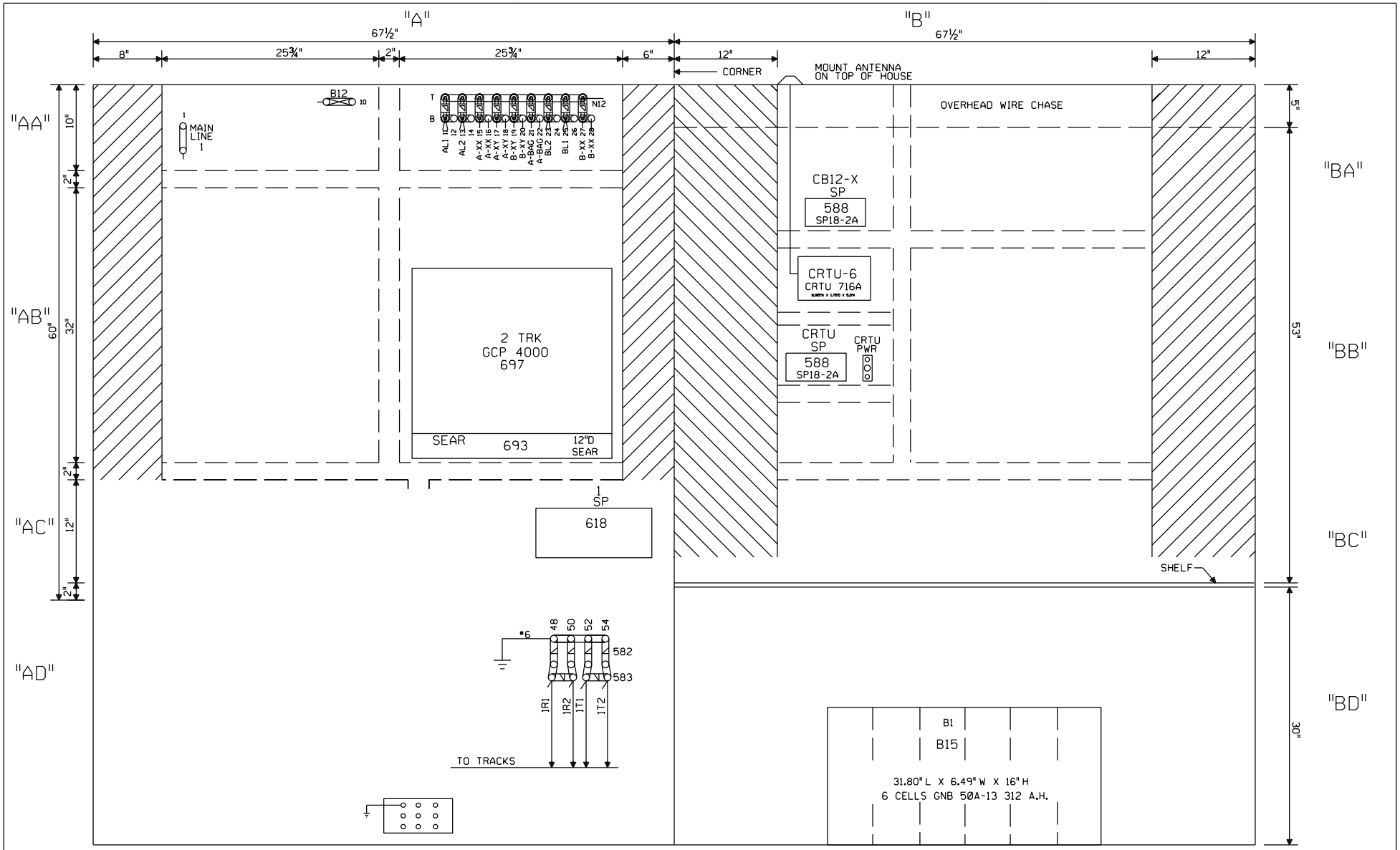

NOTE: ALL DIMENSIONS SHOWN ARE APPROXIMATE.

0 1 2 3 4 FEET

SCALE: 1.5 INCHES = 1 FOOT

STEELEVILLE, ILLINOIS
BROADWAY STREET
M.P. 76.56
PINCKNEYVILLE SUBDIVISION
D.O.T.#431 147P

1 REV.	09-08-08
INSTALL FLS/GATES & CONSTANT WARNING AT BROADWAY STREET M.P. 76.56 A.F.E. 55539 REC.15308 02-04-08	RLT
JEH/CTC/CTC/RDD	

MODIFICATION LEVEL	
O.A. LAST LEVEL CHECKED	DP
LAST LEVEL MOD THIS TYPICAL	DP
LAST LEVEL BY DESIGNER	DP
CHANGED FROM TYPICAL?	Y
Rev 02.26.07 4K 4TKGFC.8	

CIRCUIT MODIFICATIONS ARE NOT TO BE MADE WITHOUT AUTHORITY FROM THE OFFICE OF SIGNAL DESIGN

DES:	CTC
DIG:	CTC
CHK:	RLT
A.F.E.	55539
ID= 12767656.8X	

UNION PACIFIC RAILROAD

STEELEVILLE, ILLINOIS
HIGHWAY CROSSING SIGNALS
CONTROL CIRCUITS

Office of Sr AVP Engineering - Signal/TCO Omaha, Nebraska

DATE	02-28-06
SHEET	8
DWG	76.56
	S-1276

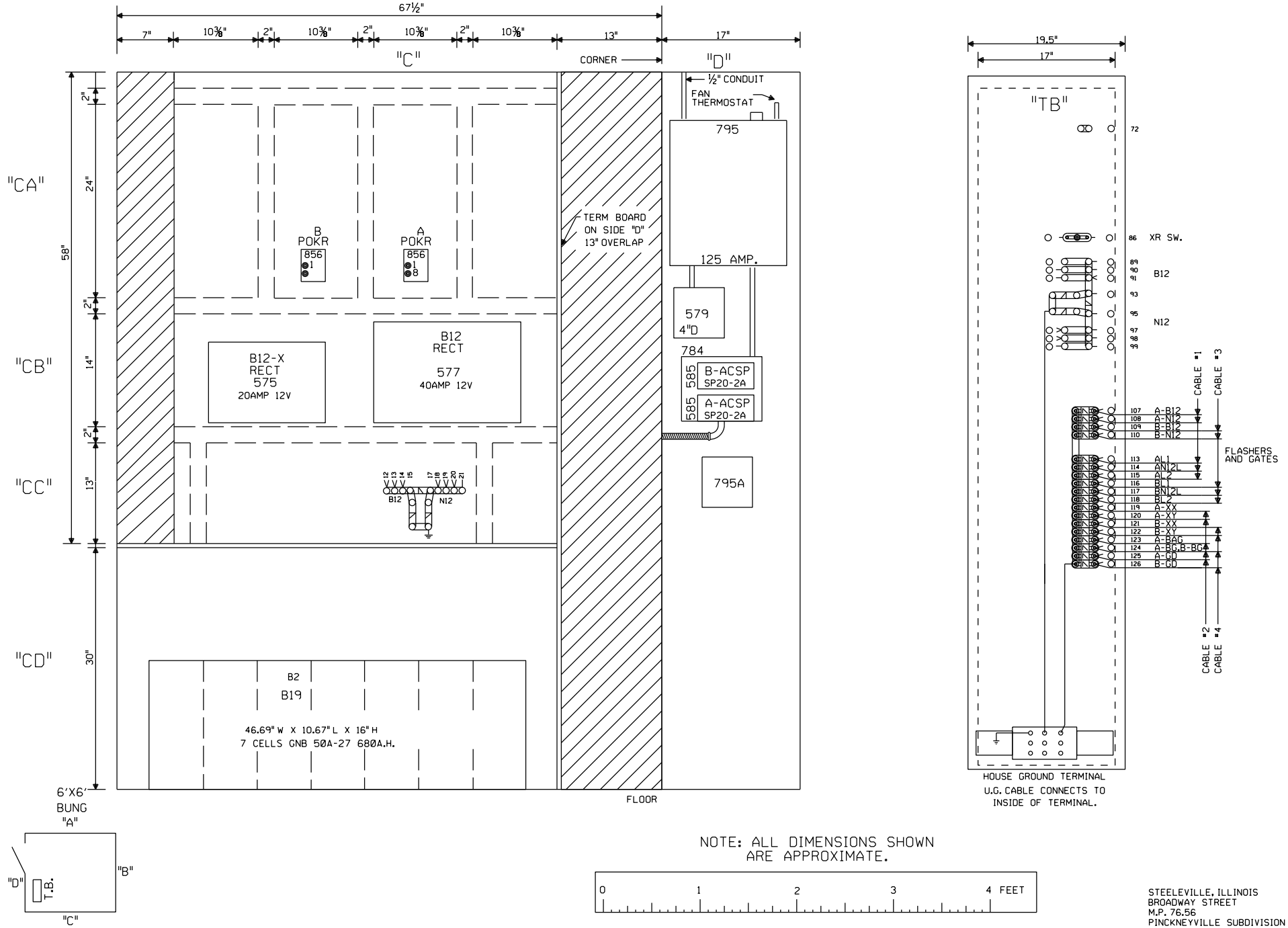

NOTE: ALL DIMENSIONS SHOWN ARE APPROXIMATE.

0 1 2 3 4 FEET

SCALE: 1.5 INCHES = 1 FOOT

STEELEVILLE, ILLINOIS
BROADWAY STREET
M.P. 76.56
PINCKNEYVILLE SUBDIVISION
D.O.T.#431 147P

1 REV. 09-08-08 INSTALL FLS/GATES & CONSTANT WARNING AT BROADWAY STREET M.P. 76.56 A.F.E. 55539 REC. 15308 02-04-08 RLT JEH/CTC/CTC/RDD	MODIFICATION LEVEL		CIRCUIT MODIFICATIONS ARE NOT TO BE MADE WITHOUT AUTHORITY FROM THE OFFICE OF SIGNAL DESIGN	DES: CTC DIG: CTC CHK: RLT A.F.E. 55539 ID= 12767656.9X	UNION PACIFIC RAILROAD STEELEVILLE, ILLINOIS HIGHWAY CROSSING SIGNALS CONTROL CIRCUITS Office of Sr AVP Engineering - Signal/TCO Omaha, Nebraska	DATE 02-28-06 SHEET 9 DWG 76.56 S-1276
	Q.A. LAST LEVEL CHECKED	DP				
	LAST LEVEL MOD THIS TYPICAL	DP				
	LAST LEVEL BY DESIGNER	DP				
	CHANGED FROM TYPICAL? REV 02.26.07 4K GFC.9	Y				