TO CHESTER

PRIME WARNING TIME = 27 SECONDS

TO MT. VERNON JCT

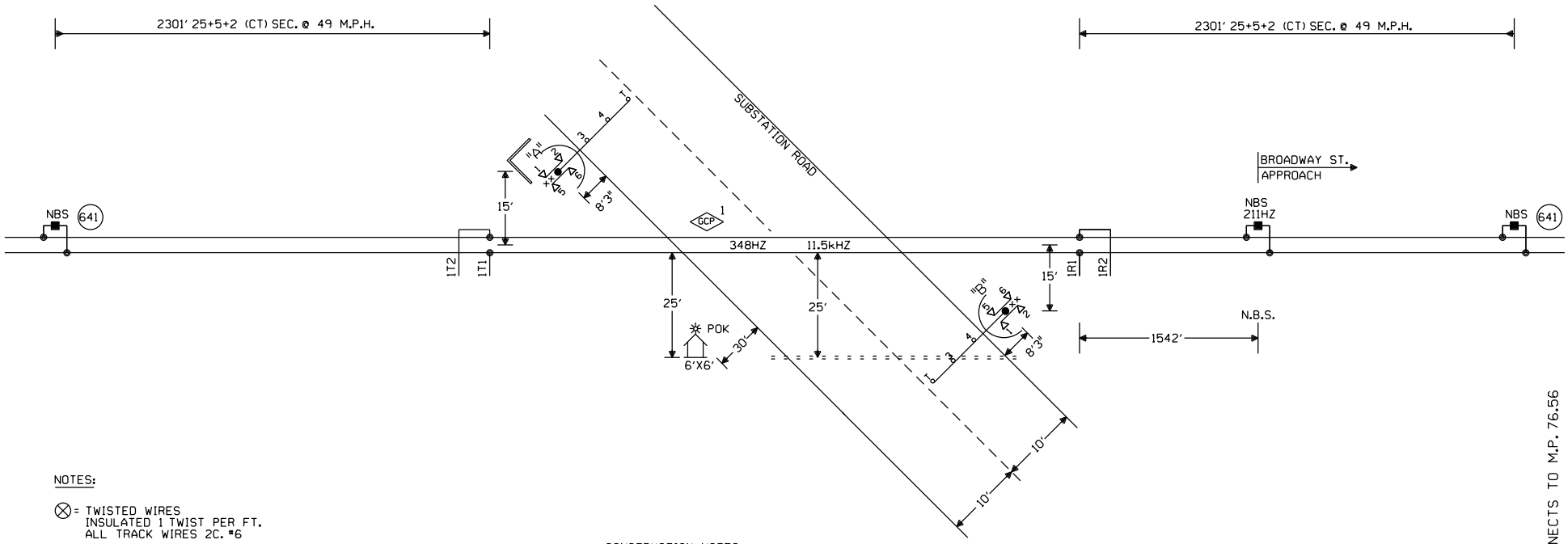

CONNECTS TO M.P. 76.56

NOTES:

⊗ = TWISTED WIRES
INSULATED 1 TWIST PER FT.
ALL TRACK WIRES 2C. #6

TRANSMITTER AND RECEIVER LEADS TO BE SEPARATED BY AT LEAST 12" IN TRENCH, LENGTHS SHOULD NOT EXCEED MANUFACTURES RECOMMENDATION.

TOP OF FOUNDATION TO BE AT SAME ELEVATION AS THE SURFACE OF THE TRAVELED WAY & NO MORE THAN 4" ABOVE THE SURFACE OF THE GROUND.

ALL BUNGALOW WIRING TO BE #16 AWG FLEX UNLESS OTHERWISE SPECIFIED EXCEPT ALL GROUND WIRE TO BE #6 AWG FLEX OR LARGER.

ALL WIRING IN GATE MECHANISM TO BE #10 "AWG FLEX".

REFER TO UP STANDARD DWG FOR BUNGALOW GROUNDING.

PORTABLE GENERATOR EXTENSION CORD FOR 240V TO 240V IS PROVIDED AS WELL AS A 120V TO 240V ADAPTER.

ALL LIGHTS TO BE 12" ROUNDELS.

= = = = = = 4" X 40' CONDUIT

LIGHTS: LED LIGHTS

GATE A: 18'
GATE B: 18'

xx = BELL

) = ½ CIRCULAR GUARDRAIL

└ = RETAINING WALL

TRK 1 ISLAND DISTANCE 133 ' MINIMUM 120' REQUIRED

PREFERRED ISLAND WIRE CONNECTIONS ARE A MINIMUM 50' FROM EDGE OF ROAD

CONSTRUCTION NOTES:

1. CULVERT EXTENDING PAST GATE "A" 20 FT.
2. REPLACE EXISTING PANELS WITH CONCRETE PANELS.
3. FIELD VERIFY 211HZ NBS FOR BROADWAY ST.
4. FIELD TO INSTALL 30' DIXIE RETAINING WALL FOR GATE 'A' IN SW QUAD.
5. CABIN PLACEMENT TO BE VERIFIED BY ICC.

OFFSET AND ISLAND DISTANCES TO BE VERIFIED BY FIELD

W(S) ◄——○——► E(N)

NEW SHEET

Designed: 02/09/15
INSTALL FLASHERS, GATES, AND CWT AT M.P. 75.89 SUBSTATION ROAD
PID: 89570 WO#: 27765 ISs: CES Rec#: CTC JTB REV 01.24.11 4K 1TKBG.1

MODIFICATION LEVEL	
O. A. LAST LEVEL CHECKED	DU
LAST LEVEL MOD THIS TYPICAL	DU
LAST LEVEL BY DESIGNER	DU
CHANGED FROM TYPICAL?	Y

CIRCUIT MODIFICATIONS ARE NOT TO BE MADE WITHOUT AUTHORITY FROM THE OFFICE OF SIGNAL DESIGN

Date: 02/09/15
Des: CTC Chk: CES
PID: 89570
AFE: 27765

UNION PACIFIC RAILROAD
STEELEVILLE, ILLINOIS
SUBSTATION ROAD
PINCKNEYVILLE SUBDIVISION
Office of AVP Engineering - Signal Omaha, Nebraska

Sh.: 1
DOT 431145B
MP: 75.89
ID: 12767589.1X

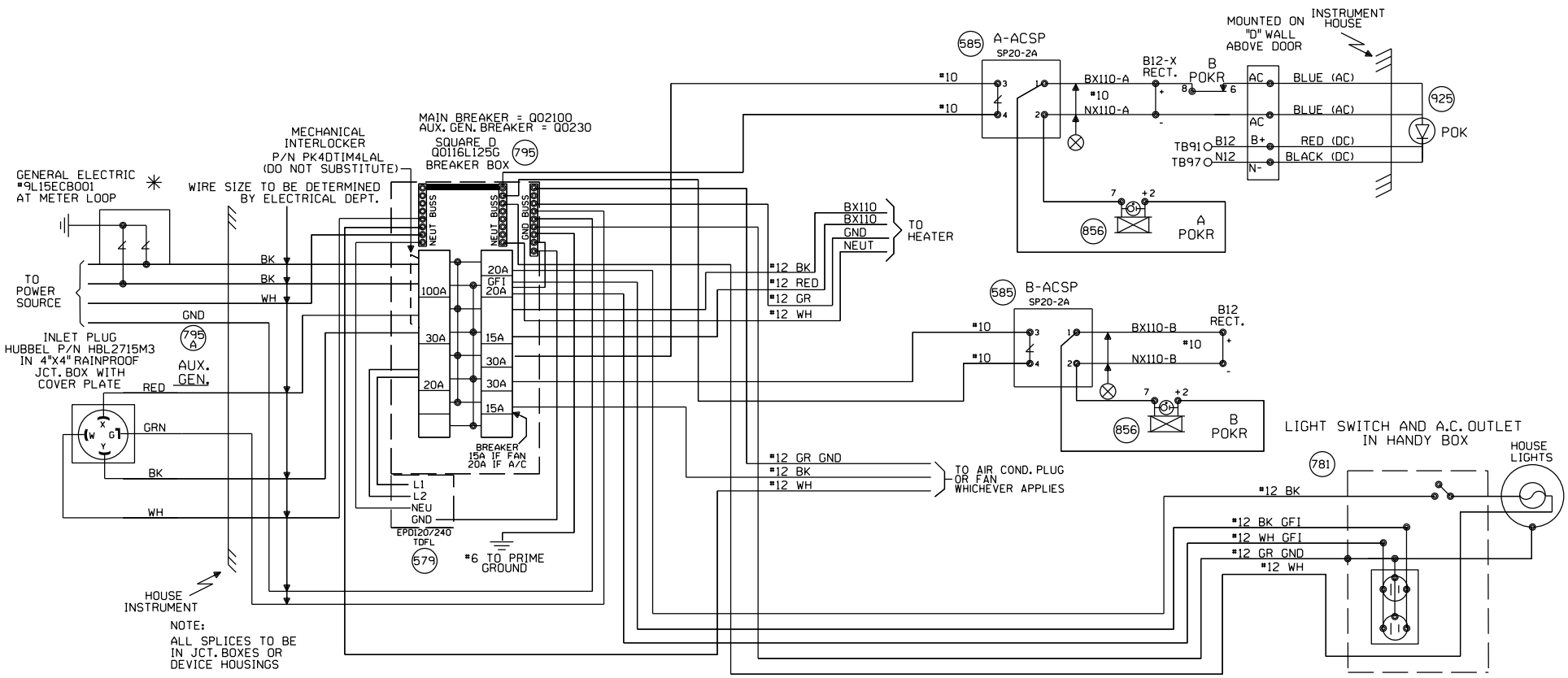
GENERAL ELECTRIC
#9L15ECB001
AT METER LOOP
WIRE SIZE TO BE DETERMINED
BY ELECTRICAL DEPT.
MECHANICAL
INTERLOCKER
P/N PK4DTIM4LAL
(DO NOT SUBSTITUTE)
MAIN BREAKER = Q02100
AUX. GEN. BREAKER = Q0230
SQUARE D
Q0116LI25G
BREAKER BOX
795
TO
POWER
SOURCE
BK
BK
WH
GND
INLET PLUG
HUBBEL P/N HBL2715M3
IN 4"X4" RAINPROOF
JCT. BOX WITH
COVER PLATE
795
A
AUX.
GEN.
RED
GRN
BK
WH
NEUT BUSS
NEUT BUSS
GND BUSS
100A
30A
20A
20A
GFI
20A
15A
30A
30A
15A
BREAKER
15A IF FAN
20A IF A/C
L1
L2
NEU
GND
EPDI20/240
TDFL
579
#6 TO PRIME
GROUND
HOUSE
INSTRUMENT
NOTE:
ALL SPLICES TO BE
IN JCT. BOXES OR
DEVICE HOUSINGS
#12 BK
#12 RED
#12 GR
#12 WH
BX110
BX110
GND
NEUT
TO
HEATER
#12 GR GND
#12 BK
#12 WH
TO AIR COND. PLUG
OR FAN
WHICHEVER APPLIES
585
A-ACSP
SP20-2A
#10
#10
BX110-A
#10
NX110-A
B12-X
RECT.
B
POKR
MOUNTED ON
"D" WALL
ABOVE DOOR
INSTRUMENT
HOUSE
AC
AC
B+
N-
BLUE (AC)
BLUE (AC)
RED (DC)
BLACK (DC)
TB91
TB97
B12
N12
925
POK
856
A
POKR
585
B-ACSP
SP20-2A
#10
#10
BX110-B
#10
NX110-B
B12
RECT.
856
B
POKR
LIGHT SWITCH AND A.C. OUTLET
IN HANDY BOX
781
HOUSE
LIGHTS
#12 BK
#12 BK GFI
#12 WH GFI
#12 GR GND
#12 WH

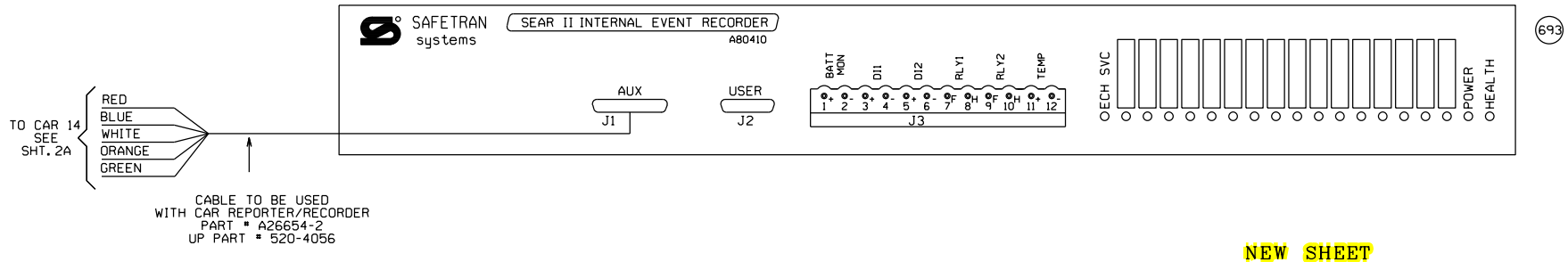
SAFETRAN
systems
SEAR II INTERNAL EVENT RECORDER
A80410
693
AUX
J1
USER
J2
BATT MON
DI1
DI2
RLY1
RLY2
TEMP
J3
ECH SVC
POWER
HEALTH
TO CAR 14
SEE
SHT. 2A
RED
BLUE
WHITE
ORANGE
GREEN
CABLE TO BE USED
WITH CAR REPORTER/RECORDER
PART # A26654-2
UP PART # 520-4056

NEW SHEET

| | | |

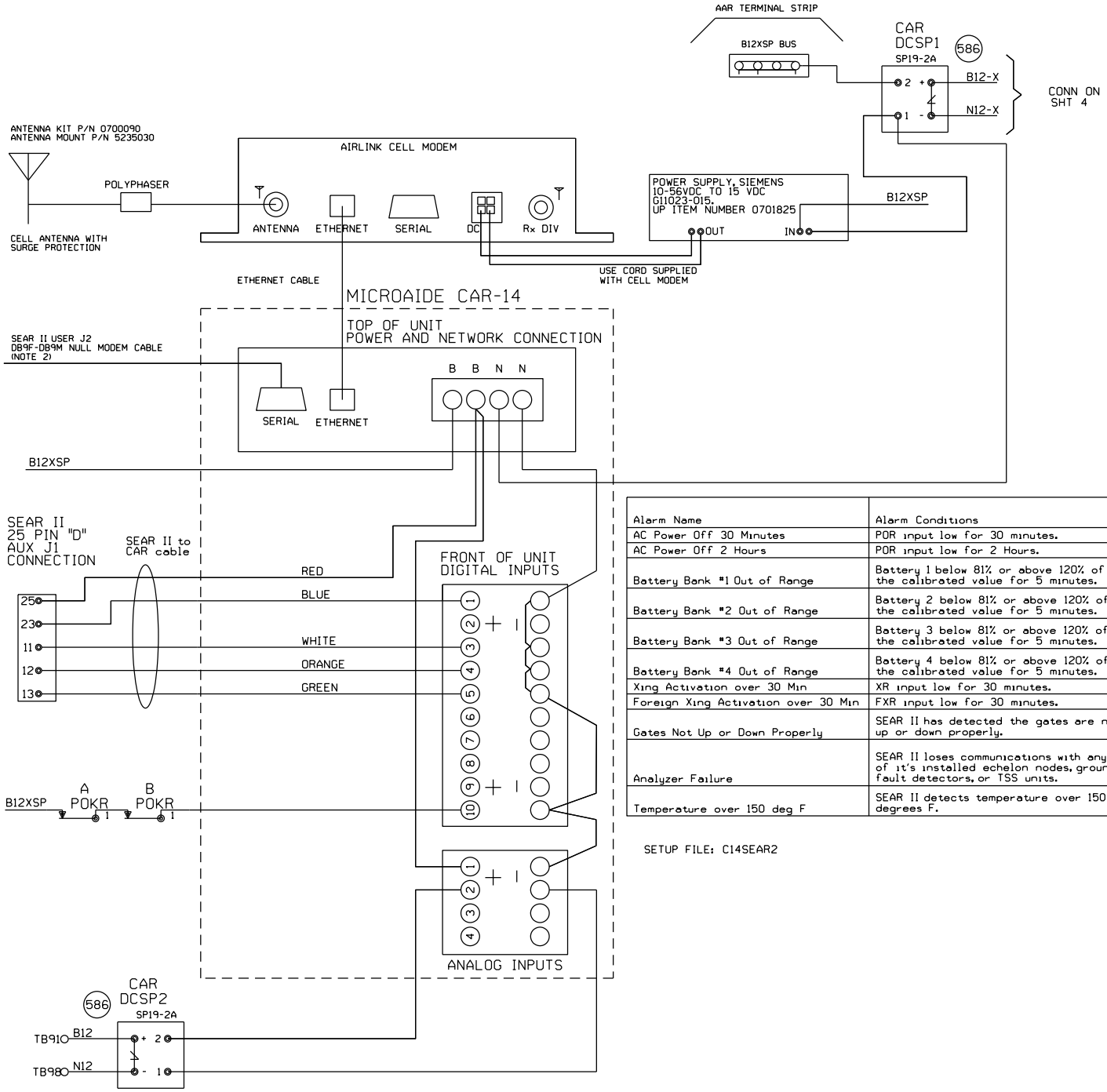

NOTE:
1) DO NOT JUMPER UNUSED INPUTS
2) THE CAR14 SERIAL PORT IS AVAILABLE TO ADD REMOTE CONNECTIVITY TO EXISTING LOGGING EQUIPMENT. USE NULL MODEM CABLE WITH SHIELDING DISCONNECTED AT ONE OR BOTH SIDES.

ANALOG INPUTS:
A1) B12X BATTERY BANK
A2) B12 BATTERY BANK
A3) BATTERY BANK 3
A4) BATTERY BANK 4

DIGITAL INPUTS
D1) XR (BLUE WIRE)
D2) FOREIGN XR
D3) ANALYZER FAILURE (WHITE WIRE)
D4) HIGH TEMPERATURE (ORANGE WIRE)
D5) GATES NOT UP OR DOWN PROPERLY (GREEN WIRE)
D10) POWER OFF INDICATION

Alarm Name	Alarm Conditions	Alarm Clearing Conditions	Cleared by Maintainer Mode?
AC Power Off 30 Minutes	POR input low for 30 minutes.	POR input high for 5 minutes.	No
AC Power Off 2 Hours	POR input low for 2 Hours.	POR input high for 5 minutes.	No
Battery Bank #1 Out of Range	Battery 1 below 81% or above 120% of the calibrated value for 5 minutes.	Battery 1 within acceptable range for 5 minutes.	No
Battery Bank #2 Out of Range	Battery 2 below 81% or above 120% of the calibrated value for 5 minutes.	Battery 2 within acceptable range for 5 minutes.	No
Battery Bank #3 Out of Range	Battery 3 below 81% or above 120% of the calibrated value for 5 minutes.	Battery 3 within acceptable range for 5 minutes.	No
Battery Bank #4 Out of Range	Battery 4 below 81% or above 120% of the calibrated value for 5 minutes.	Battery 4 within acceptable range for 5 minutes.	No
Xing Activation over 30 Min	XR input low for 30 minutes.	XR input high for 10 seconds.	Yes
Foreign Xing Activation over 30 Min	FXR input low for 30 minutes.	FXR input high for 10 seconds.	Yes
Gates Not Up or Down Properly	SEAR II has detected the gates are not up or down properly.	SEAR II has detected the gates are up or down properly.	No
Analyzer Failure	SEAR II loses communications with any of it's installed echelon nodes, ground fault detectors, or TSS units.	SEAR II has recovered after an analyzer failure alarm.	No
Temperature over 150 deg F	SEAR II detects temperature over 150 degrees F.	SEAR II sensor detects temperature is OK after a High-Temp alarm.	No

SETUP FILE: C14SEAR2

NEW SHEET

Designed: 02/09/15
INSTALL FLASHERS, GATES, AND CWT AT M.P. 75.89 SUBSTATION ROAD
PID: 89570 WO#: 27765
ISs Rec'd: / NBT / CTC / JTB
REV 01.24.11 4K ACDCCAR14SII.3

MODIFICATION LEVEL	
Q. A. LAST LEVEL CHECKED	DU
LAST LEVEL MOD THIS TYPICAL	DU
LAST LEVEL BY DESIGNER	DU
CHANGED FROM TYPICAL?	Y

CIRCUIT MODIFICATIONS ARE NOT TO BE MADE WITHOUT AUTHORITY FROM THE OFFICE OF SIGNAL DESIGN

Date: 02/09/15
Des: CTC Chk: NBT
PID: 89570
AFE: 27765

UNION PACIFIC RAILROAD
STEELEVILLE, ILLINOIS
SUBSTATION ROAD
PINCKNEYVILLE SUBDIVISION
Office of AVP Engineering - Signal Omaha, Nebraska

Sh.: 2A
DOT 431145B
MP: 75.89
ID: 12767589.2AX

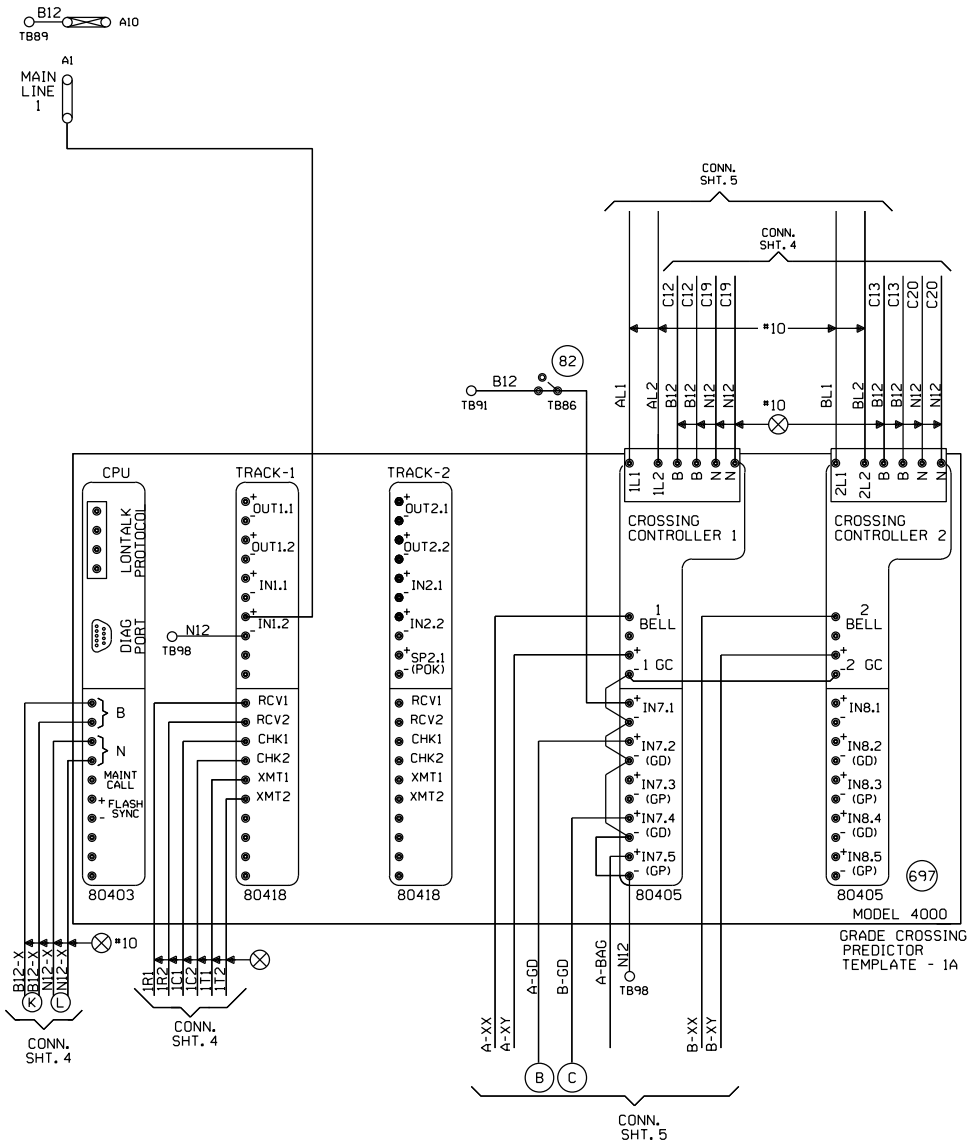

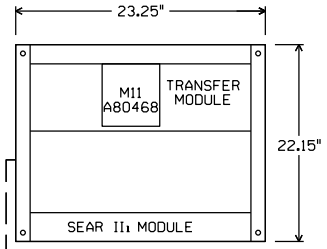

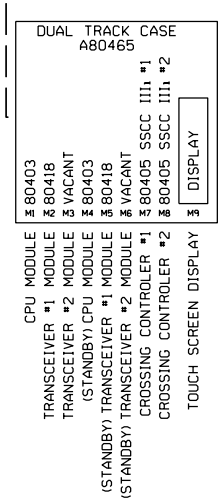

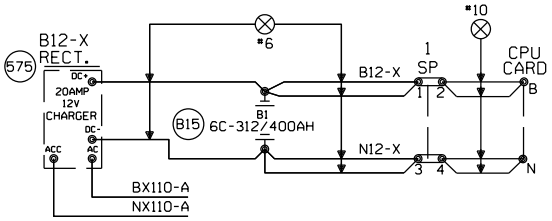

"Mf" FREQUENCY (HZ)	MAXIMUM TRANSMIT WIRE LENGTH (FEET)
86	100
114	125
156	150
211	200
285-970	250

NOTE:
EACH TRANSMITTER TO RAIL WIRE FROM XMT1 AND XMT2 MUST NOT EXCEED THE MAXIMUM LENGTH SPECIFIED IN THE TABLE SHOWN. THE RECEIVER WIRE LENGTH IS NOT CRITICAL. DOES NOT APPLY TO 6 TRACK WIRE APPLICATION.

NEW SHEET

Designed: 02/09/15
INSTALL FLASHERS, GATES, AND CWT AT M.P. 75.89 SUBSTATION ROAD
PID: 89570 WO#: 27765 NBT
IS: CTC JTB
Rev: Rev 01.24.11 4K 2TKGF.3

MODIFICATION LEVEL	
O. A. LAST LEVEL CHECKED	DU
LAST LEVEL MOD THIS TYPICAL	DU
LAST LEVEL BY DESIGNER	DU
CHANGED FROM TYPICAL?	Y

CIRCUIT MODIFICATIONS ARE NOT TO BE MADE WITHOUT AUTHORITY FROM THE OFFICE OF SIGNAL DESIGN

Date: 02/09/15
Des: CTC Chk: NBT
PID: 89570
AFE: 27765

UNION PACIFIC RAILROAD
STEELEVILLE, ILLINOIS
SUBSTATION ROAD
PINCKNEYVILLE SUBDIVISION
Office of AVP Engineering - Signal Omaha, Nebraska

Sh.: 3
DOT 431145B
MP: 75.89
ID: 12767589.3X

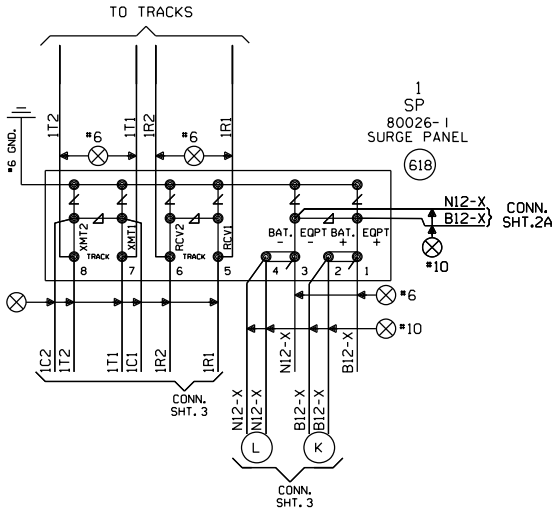

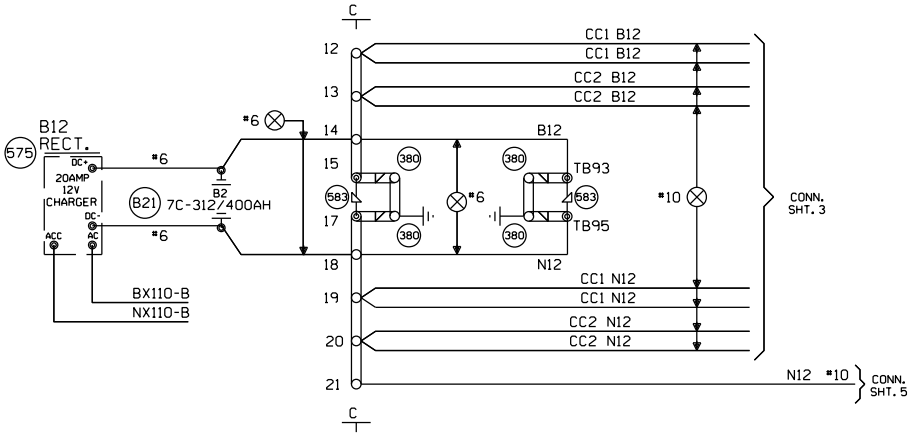

NEW SHEET

					Designed: 02/09/15 INSTALL FLASHERS, GATES, AND CWT AT M.P. 75.89 SUBSTATION ROAD PID: 89570 WO#: 27765 NBT IS: CTC JTB Rec'd: REV 01.24.11 4K 4TKSPGFC.4	MODIFICATION LEVEL O. A. LAST LEVEL CHECKED DU LAST LEVEL MOD THIS TYPICAL DU LAST LEVEL BY DESIGNER DU CHANGED FROM TYPICAL? Y	CIRCUIT MODIFICATIONS ARE NOT TO BE MADE WITHOUT AUTHORITY FROM THE OFFICE OF SIGNAL DESIGN	Date: 02/09/15 Des: CTC Chk: NBT PID: 89570 AFE: 27765	UNION PACIFIC RAILROAD STEELEVILLE, ILLINOIS SUBSTATION ROAD PINCKNEYVILLE SUBDIVISION Office of AVP Engineering - Signal Omaha, Nebraska	Sh.: 4 DOT 431145B MP: 75.89 ID: 12767589.4X

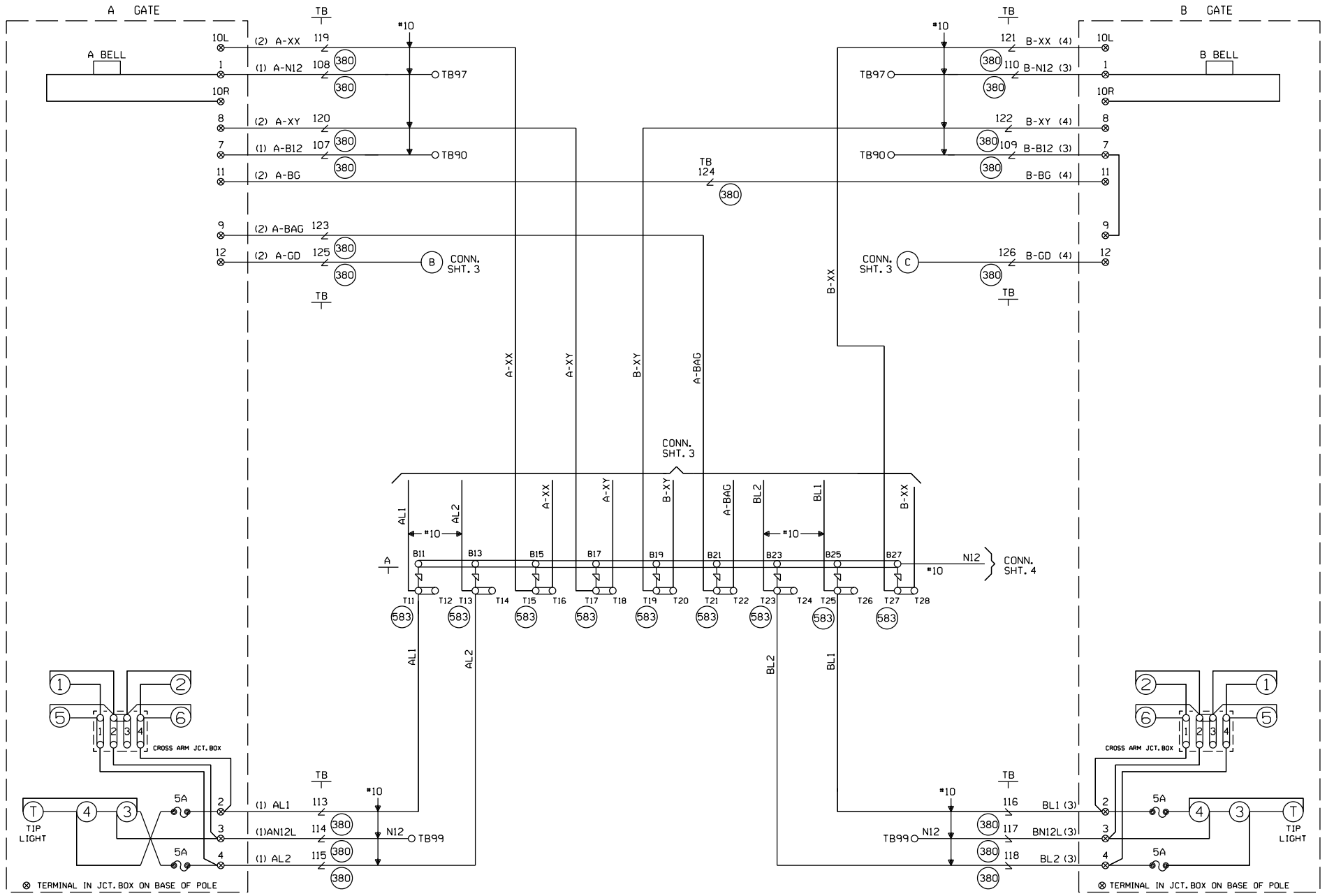

CABLE TABULATION

CABLE NO. 1 5C. NO.6 U.G.B.T. TO GATE A
CABLE NO. 2 7C. NO.14 U.G.B.T. TO GATE A
CABLE NO. 3 5C. NO.6 U.G.B.T. TO GATE B
CABLE NO. 4 7C. NO.14 U.G.B.T. TO GATE B

NEW SHEET

Designed: 02/09/15
INSTALL FLASHERS, GATES, AND CWT AT M.P. 75.89 SUBSTATION ROAD
PID: 89570 WO#: 27765 NBT
Rev: CTC JTB

MODIFICATION LEVEL	
O. A. LAST LEVEL CHECKED	DU
LAST LEVEL MOD THIS TYPICAL	DU
LAST LEVEL BY DESIGNER	DU
CHANGED FROM TYPICAL?	Y

rev 01.24.11 4K GFSLTYP.5

CIRCUIT MODIFICATIONS ARE NOT TO BE MADE WITHOUT AUTHORITY FROM THE OFFICE OF SIGNAL DESIGN

Date: 02/09/15
Des: CTC Chk: NBT
PID: 89570
AFE: 27765

UNION PACIFIC RAILROAD

STEELEVILLE, ILLINOIS
SUBSTATION ROAD
PINCKNEYVILLE SUBDIVISION

Office of AVP Engineering - Signal Omaha, Nebraska

Sh.: 5
DOT 431145B
MP: 75.89
ID: 12767589.5X

WCH 3593-E

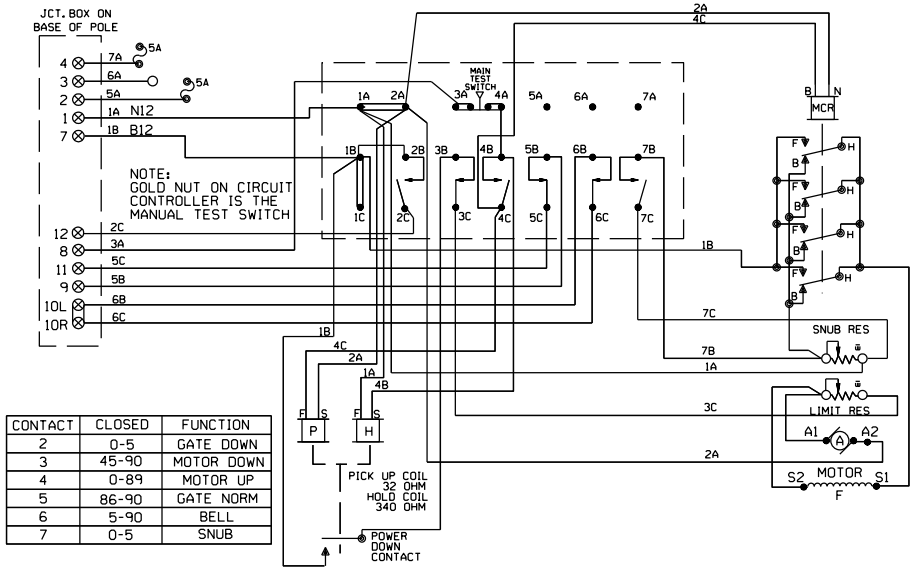

CONTACT	CLOSED	FUNCTION
2	0-5	GATE DOWN
3	45-90	MOTOR DOWN
4	0-89	MOTOR UP
5	86-90	GATE NORM
6	5-90	BELL
7	0-5	SNUB

WCH 3597-E

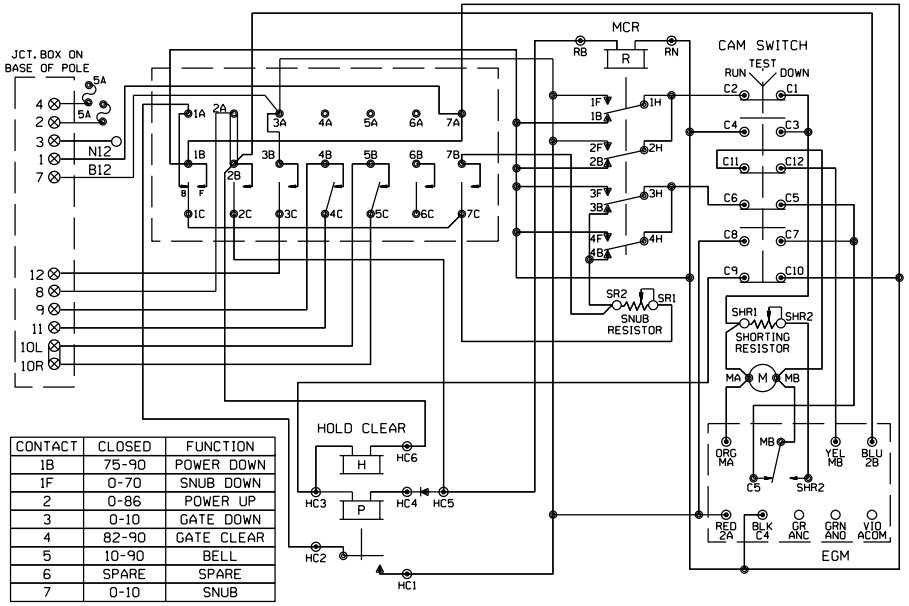

CONTACT	CLOSED	FUNCTION
1B	75-90	POWER DOWN
1F	0-70	SNUB DOWN
2	0-86	POWER UP
3	0-10	GATE DOWN
4	82-90	GATE CLEAR
5	10-90	BELL
6	SPARE	SPARE
7	0-10	SNUB

WCH 3597-RB

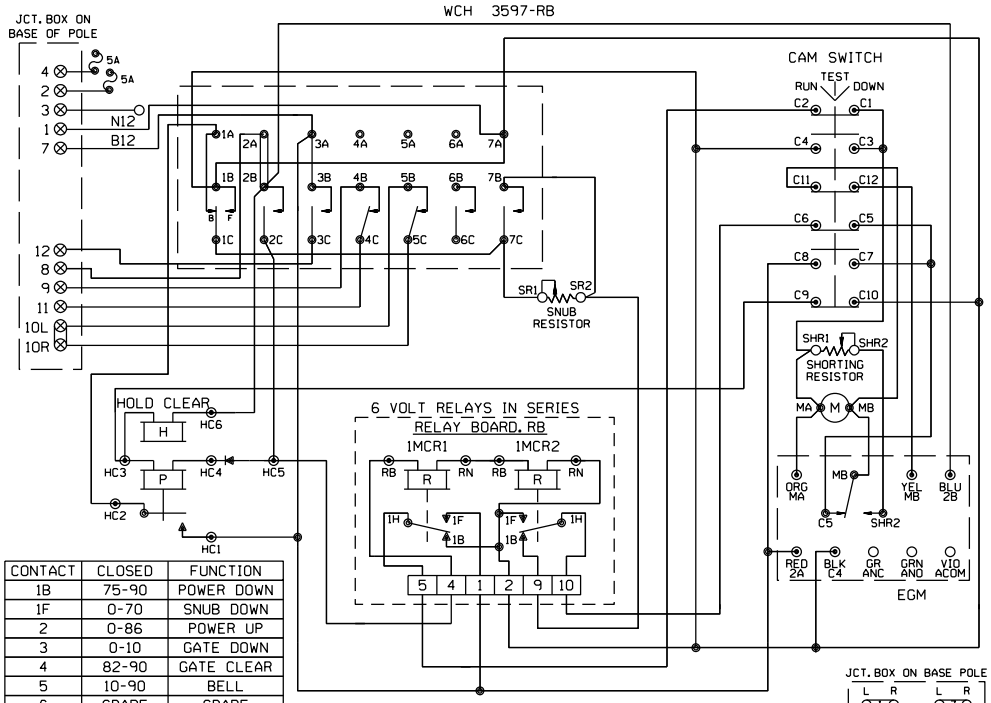

CONTACT	CLOSED	FUNCTION
1B	75-90	POWER DOWN
1F	0-70	SNUB DOWN
2	0-86	POWER UP
3	0-10	GATE DOWN
4	82-90	GATE CLEAR
5	10-90	BELL
6	SPARE	SPARE
7	0-10	SNUB

JCT. BOX ON BASE POLE

L	R	L	R
1	1	7	7
2	2	8	8
3	3	9	9
4	4	10	10
5	5	11	11
6	6	12	12

SHOW TYPE MECH. INSTALLED

ALL MECHANISMS SHOWN IN THE CLEAR POSITION

SAFETRAN S-60

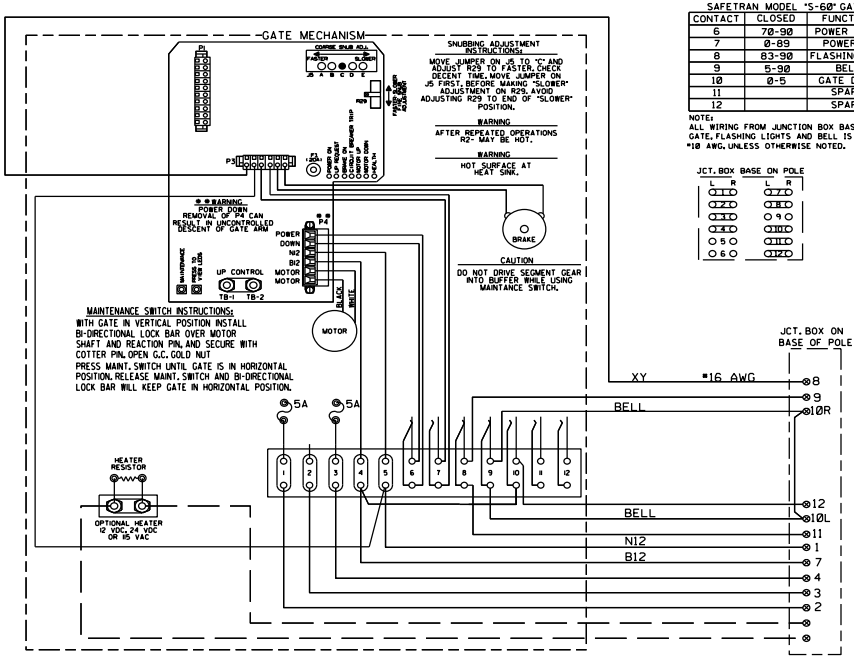

SAFETRAN MODEL "S-60" GATE

CONTACT	CLOSED	FUNCTION
6	70-90	POWER DOWN
7	0-89	POWER UP
8	83-90	FLASHING LGT.
9	5-90	BELL
10	0-5	GATE DOWN
11		SPARE
12		SPARE

NOTE:
ALL WIRING FROM JUNCTION BOX BASE TO GATE, FLASHING LIGHTS AND BELL IS TO BE #10 AWG, UNLESS OTHERWISE NOTED.

JCT. BOX BASE ON POLE

L	R	L	R
1	1	7	7
2	2	8	8
3	3	9	9
4	4	10	10
5	5	11	11
6	6	12	12

NEW SHEET

Designed: 02/09/15

INSTALL FLASHERS, GATES, AND CWT AT M.P. 75.89 SUBSTATION ROAD

PID: 89570 WO#: 27765

MODIFICATION LEVEL	
Q. A. LAST LEVEL CHECKED	DU
LAST LEVEL MOD THIS TYPICAL	DU
LAST LEVEL BY DESIGNER	DU
CHANGED FROM TYPICAL?	N

CIRCUIT MODIFICATIONS ARE NOT TO BE MADE WITHOUT AUTHORITY FROM THE OFFICE OF SIGNAL DESIGN

Date: 02/09/15

Des: CTC Chk: NBT

PID: 89570

AFE: 27765

UNION PACIFIC RAILROAD

STEELEVILLE, ILLINOIS
SUBSTATION ROAD
PINCKNEYVILLE SUBDIVISION

Office of AVP Engineering - Signal — Omaha, Nebraska

Sh.: 6

DOT 431145B

MP: 75.89

ID: 12767589.6X

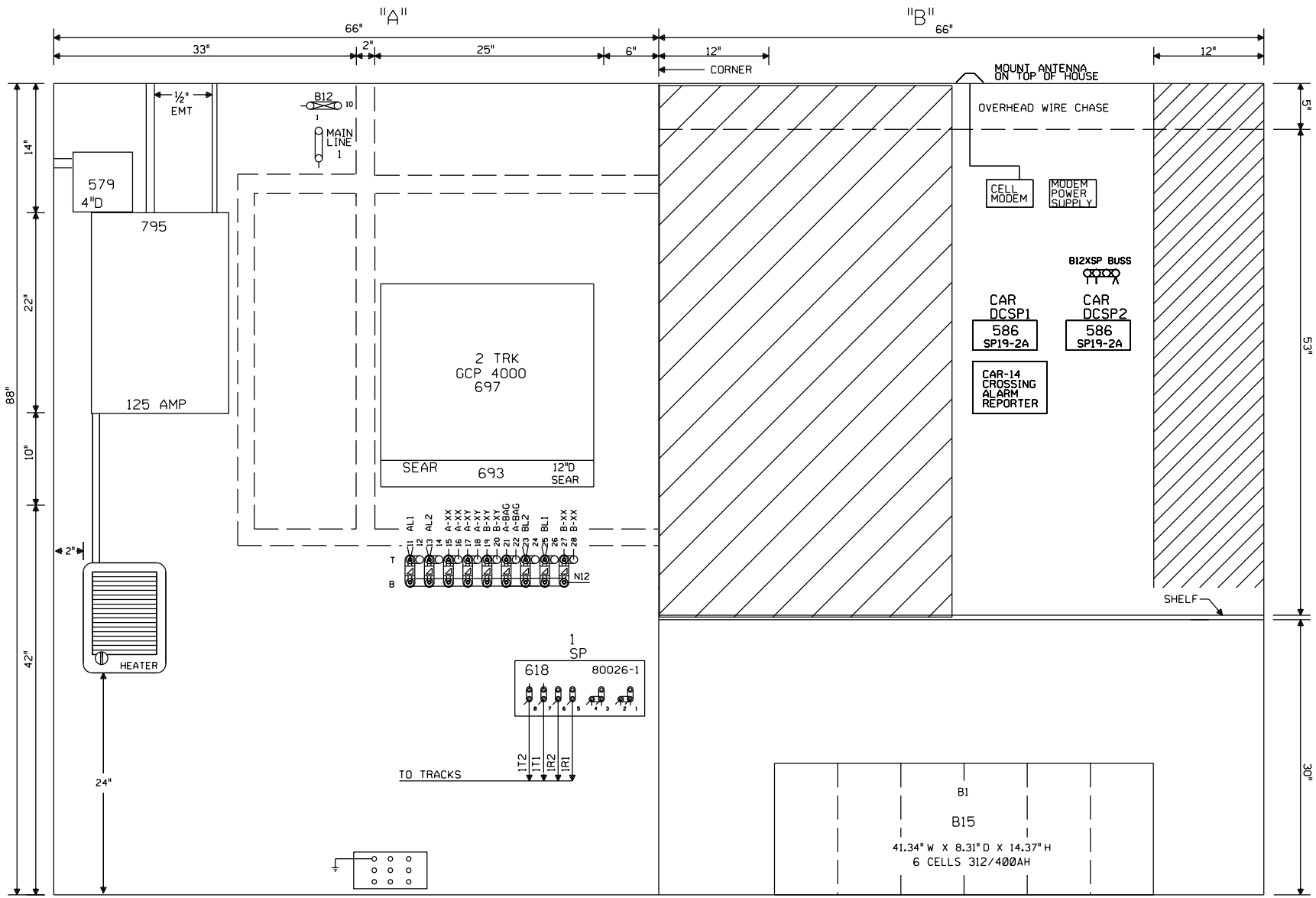

6X6 HOUSE WITH BLOWER & TIB U.P. PART#520-2530

NOTE: ALL DIMENSIONS SHOWN ARE APPROXIMATE.

NEW SHEET

Designed: 02/09/15

INSTALL FLASHERS, GATES, AND CWT AT M.P. 75.89 SUBSTATION ROAD

PID: 89570 WO#: 27765 / NBT

IS: CTC / JTB

Rec#:

MODIFICATION LEVEL	
O. A. LAST LEVEL CHECKED	DU
LAST LEVEL MOD THIS TYPICAL	DU
LAST LEVEL BY DESIGNER	DU
CHANGED FROM TYPICAL?	Y

REV 01.24.11 4K 4TKGFC.8

CIRCUIT MODIFICATIONS ARE NOT TO BE MADE WITHOUT AUTHORITY FROM THE OFFICE OF SIGNAL DESIGN

Date: 02/09/15

Des: CTC Chk: NBT

PID: 89570

AFE: 27765

UNION PACIFIC RAILROAD

STEELEVILLE, ILLINOIS
SUBSTATION ROAD
PINCKNEYVILLE SUBDIVISION

Office of AVP Engineering - Signal Omaha, Nebraska

Sh.: 7

DOT 431145B

MP: 75.89

ID: 12767589.7X

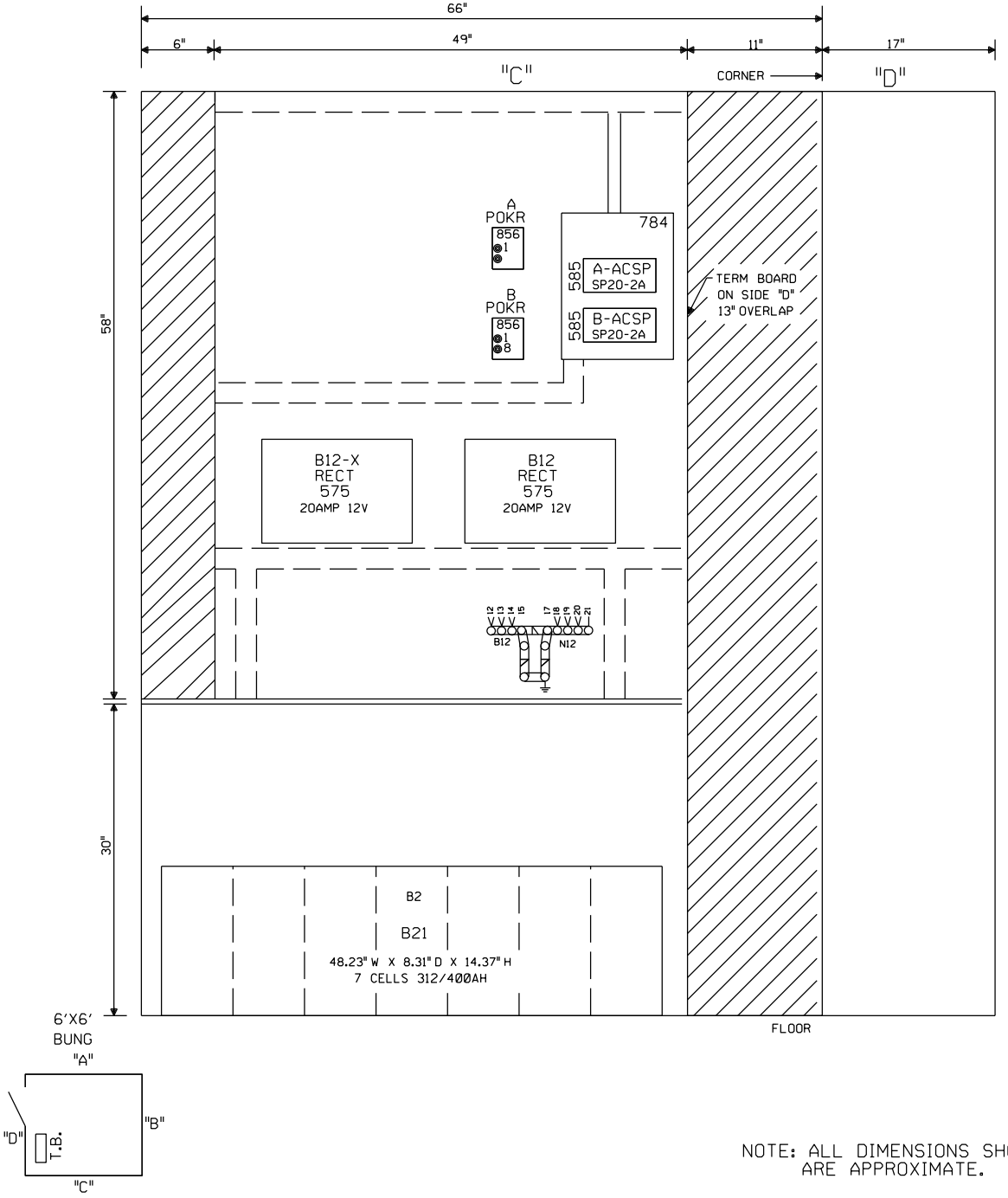

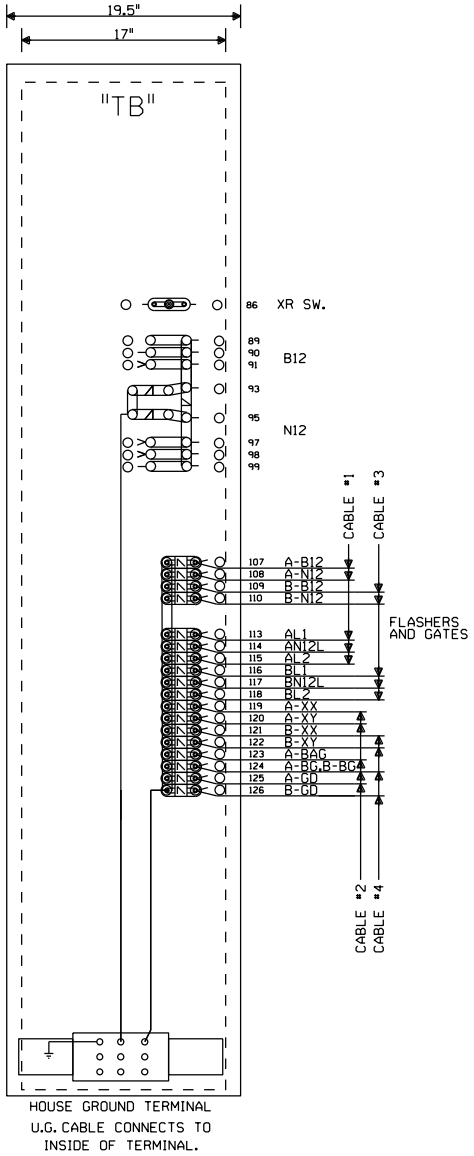

NOTE: NO TEST LINKS TO BE INSTALLED WITH CROSSING LIGHTING OR GATE MECH CIRCUITRY

NOTE: ALL DIMENSIONS SHOWN ARE APPROXIMATE.

NEW SHEET

					Designed: 02/09/15 INSTALL FLASHERS, GATES, AND CWT AT M.P. 75.89 SUBSTATION ROAD PID: 89570 WO#: 27765 IS: / NBT Rec'd: / CTC / JTB REV 01.24.11 4K GFC.9	MODIFICATION LEVEL Q.A. LAST LEVEL CHECKED DU LAST LEVEL MOD THIS TYPICAL DU LAST LEVEL BY DESIGNER DU CHANGED FROM TYPICAL? Y	CIRCUIT MODIFICATIONS ARE NOT TO BE MADE WITHOUT AUTHORITY FROM THE OFFICE OF SIGNAL DESIGN	Date: 02/09/15 Des: CTC Chk: NBT PID: 89570 AFE: 27765	**UNION PACIFIC RAILROAD** STEELEVILLE, ILLINOIS SUBSTATION ROAD PINCKNEYVILLE SUBDIVISION Office of AVP Engineering - Signal Omaha, Nebraska	Sh.: 8 DOT 431145B MP: 75.89 ID: 12767589.8X