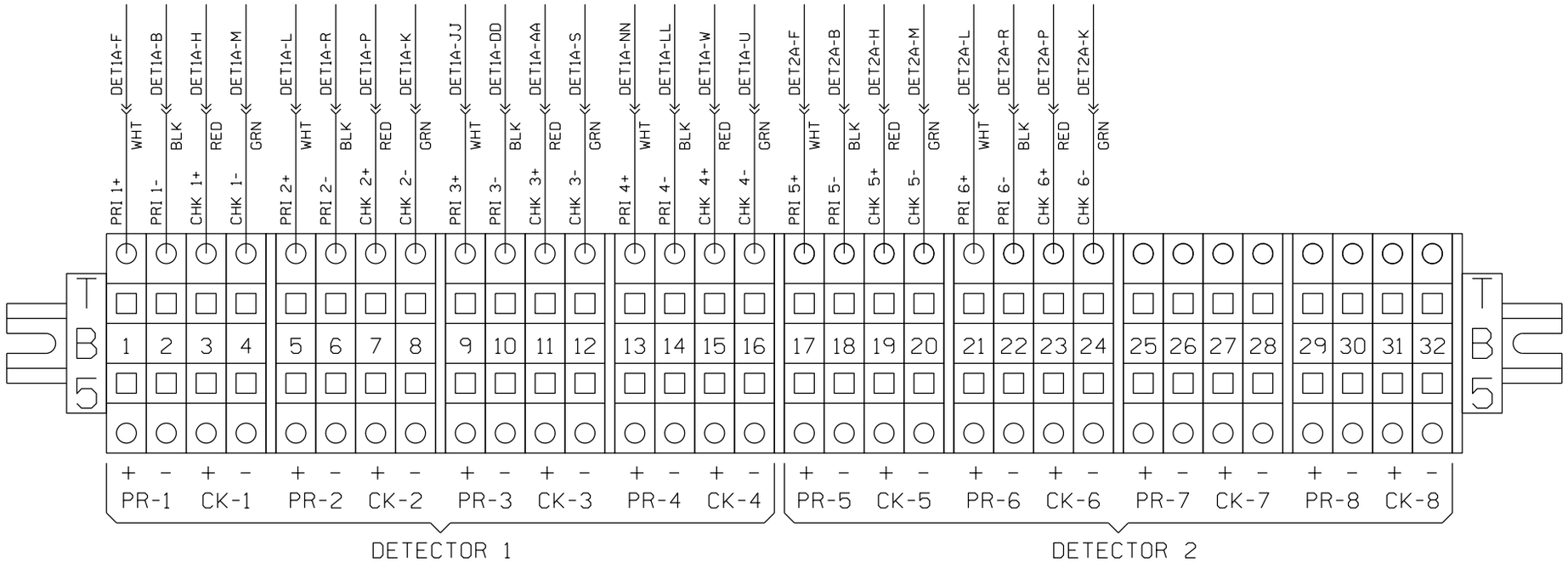

NEW SHEET

					Designed: 09/27/12 TIER IS PHASE 1 M.P. 239.70 TO M.P. 255.35 TO UPGRADE XING TO 4 QUAD WITH EGMS, VARIOUS C.P.'S Rec*: WO#: 10804 IS: NBT / / /NST/MJF	MODIFICATION LEVEL Q. A. LAST LEVEL CHECKED DU LAST LEVEL MOD THIS TYPICAL DU LAST LEVEL BY DESIGNER DU CHANGED FROM TYPICAL? Y REV 01.24.11 4K 2TKEGMS.9D	CIRCUIT MODIFICATIONS ARE NOT TO BE MADE WITHOUT AUTHORITY FROM THE OFFICE OF SIGNAL DESIGN	Date: 09/27/12 Des: NST Chk: NBT AFE: 10804	UNION PACIFIC RAILROAD BRIGHTON, ILLINOIS BRIGHTON BUNKER HILL ROAD SPRINGFIELD SUBDIVISION Office of AVP Engineering - Signal Omaha, Nebraska	Sh.: 9C DOT 294417H MP: 244.76 ID: CSL24476.9CX

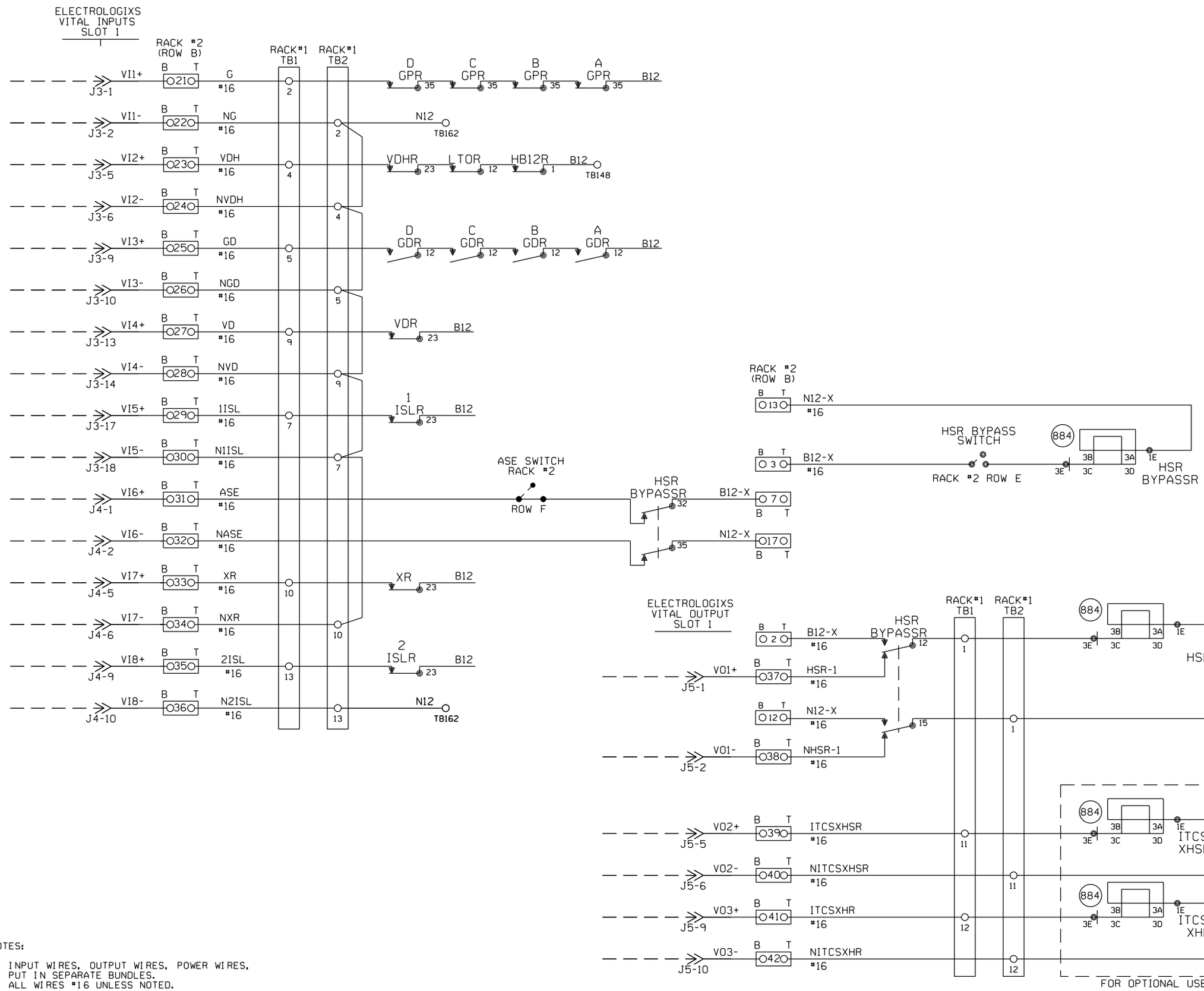

NOTES:

1. INPUT WIRES, OUTPUT WIRES, POWER WIRES, PUT IN SEPARATE BUNDLES.
2. ALL WIRES #16 UNLESS NOTED.
3. O?? O 2 POSITION WAGO BLOCK.

NEW SHEET

Designed: 09/27/12
TIER 1S PHASE 1 M.P. 239.70 TO M.P. 255.35 TO UPGRADE XING TO 4 QUAD WITH EGMS, VARIOUS C.P.'S
Rec#: WO#:10804
1S: NBT / / /NST/MJF

CIRCUIT MODIFICATIONS ARE NOT TO BE MADE WITHOUT AUTHORITY FROM THE OFFICE OF SIGNAL DESIGN

Date:	09/27/12
Des:	NST
Chk:	NBT
AFE:	10804

UNION PACIFIC RAILROAD
BRIGHTON, ILLINOIS
BRIGHTON BUNKER HILL ROAD
SPRINGFIELD SUBDIVISION
Office of AVP Engineering - Signal Omaha, Nebraska

Sh.:	10
DOT	294417H
MP:	244.76
ID:	CSL24476.10X

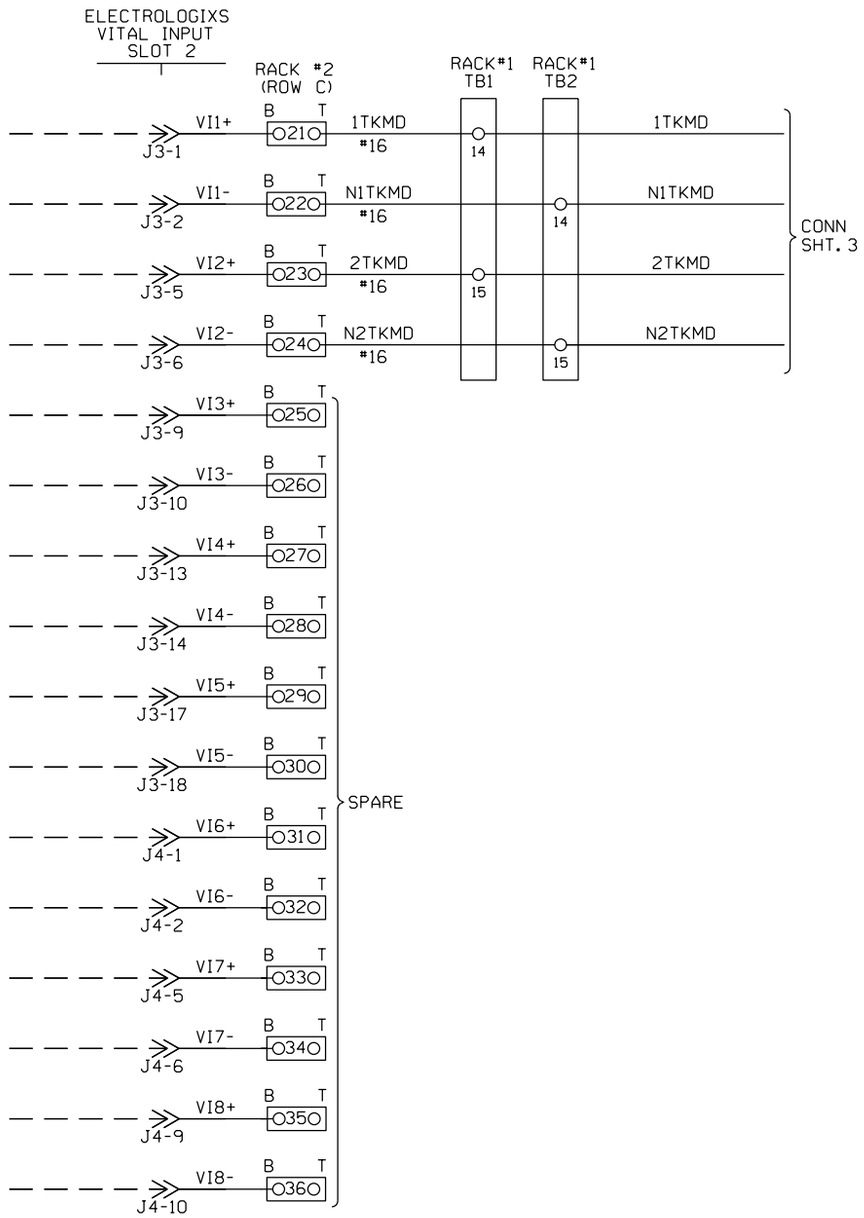

NOTES:

1. INPUT WIRES, OUTPUT WIRES, POWER WIRES, PUT IN SEPARATE BUNDLES.
2. ALL WIRES #16 UNLESS NOTED.
3. [O?? O] 2 POSITION WAGO BLOCK.

NEW SHEET

							Designed: 09/27/12 TIER 1S PHASE 1 M.P. 239.70 TO M.P. 255.35 TO UPGRADE XING TO 4 QUAD WITH EGMS, VARIOUS C.P.'S Rec#: WO#: 10804 IS: NBT/ / /NST/MJF	CIRCUIT MODIFICATIONS ARE NOT TO BE MADE WITHOUT AUTHORITY FROM THE OFFICE OF SIGNAL DESIGN	Date: 09/27/12 Des: NST Chk: NBT AFE: 10804	UNION PACIFIC RAILROAD BRIGHTON, ILLINOIS BRIGHTON BUNKER HILL ROAD SPRINGFIELD SUBDIVISION Office of AVP Engineering - Signal Omaha, Nebraska	Sh.: 10A DOT 294417H MP: 244.76 ID: CSL24476.10AX

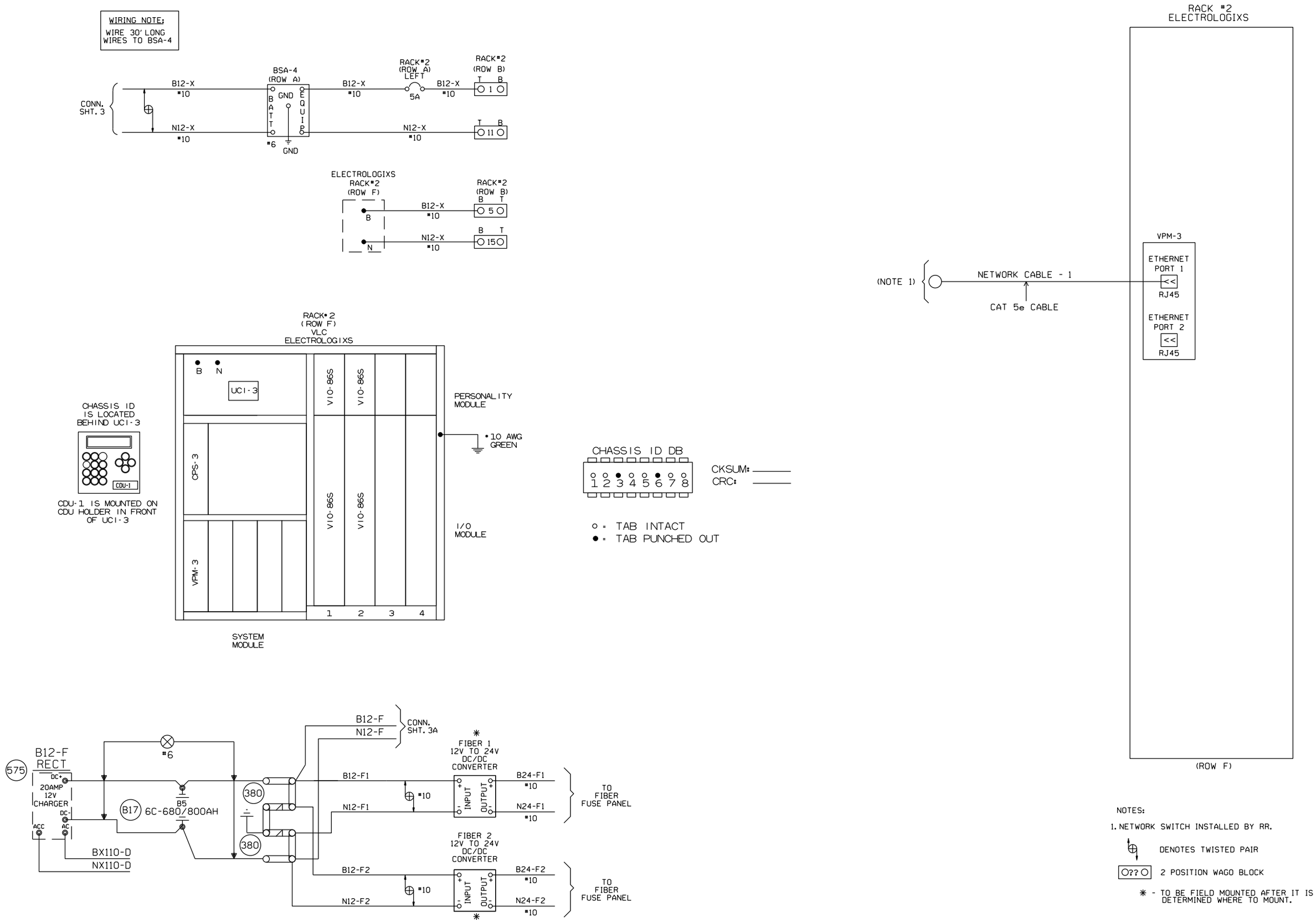

NOTES:

1. NETWORK SWITCH INSTALLED BY RR.

DENOTES TWISTED PAIR

2 POSITION WAGO BLOCK

✳ - TO BE FIELD MOUNTED AFTER IT IS DETERMINED WHERE TO MOUNT.

NEW SHEET

Designed: 09/27/12 TIER IS PHASE 1 M.P. 239.70 TO M.P. 255.35 TO UPGRADE XING TO 4 QUAD WITH EGMS, VARIOUS C.P.'S Rec#: WO#: 10804 IS: NBT/ / /NST/MJF	CIRCUIT MODIFICATIONS ARE NOT TO BE MADE WITHOUT AUTHORITY FROM THE OFFICE OF SIGNAL DESIGN	Date: 09/27/12 Des: NST Chk: NBT AFE: 10804	UNION PACIFIC RAILROAD BRIGHTON, ILLINOIS BRIGHTON BUNKER HILL ROAD SPRINGFIELD SUBDIVISION Office of AVP Engineering - Signal Omaha, Nebraska	Sh.: 10B DOT 294417H MP: 244.76 ID: CSL24476.10BX

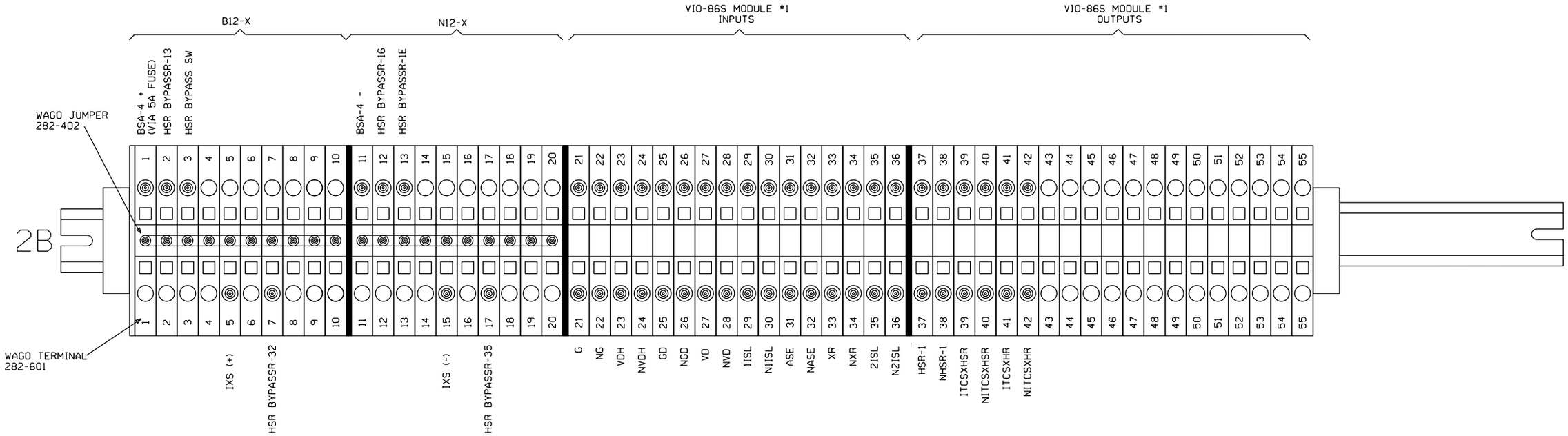

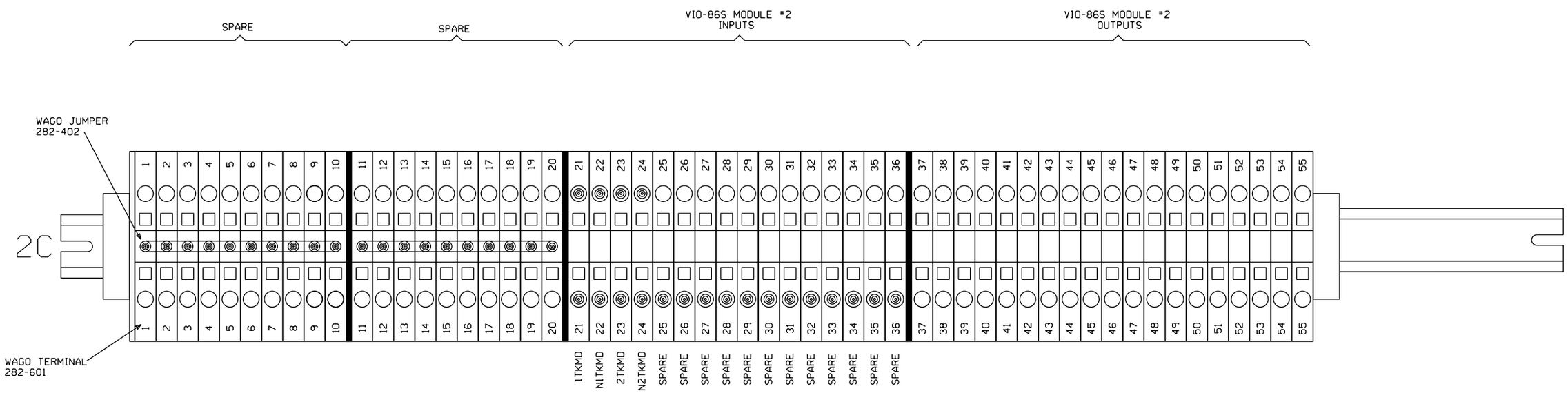

ELECTROLOGIXS WAGO BLOCKS

NEW SHEET

Designed: 09/27/12
TIER IS PHASE 1 M.P. 239.70 TO M.P. 255.35 TO UPGRADE XING TO 4 QUAD WITH EGMS, VARIOUS C.P.'S
Rec*: WO*: 10804
IS: NBT/ / NST/MJF

CIRCUIT MODIFICATIONS ARE NOT TO BE MADE WITHOUT AUTHORITY FROM THE OFFICE OF SIGNAL DESIGN

Date: 09/27/12
Des: NST
Chk: NBT
AFE: 10804

UNION PACIFIC RAILROAD
BRIGHTON, ILLINOIS
BRIGHTON BUNKER HILL ROAD
SPRINGFIELD SUBDIVISION
Office of AVP Engineering - Signal Omaha, Nebraska

Sh.: 10C
DOT 294417H
MP: 244.76
ID: CSL24476.10CX

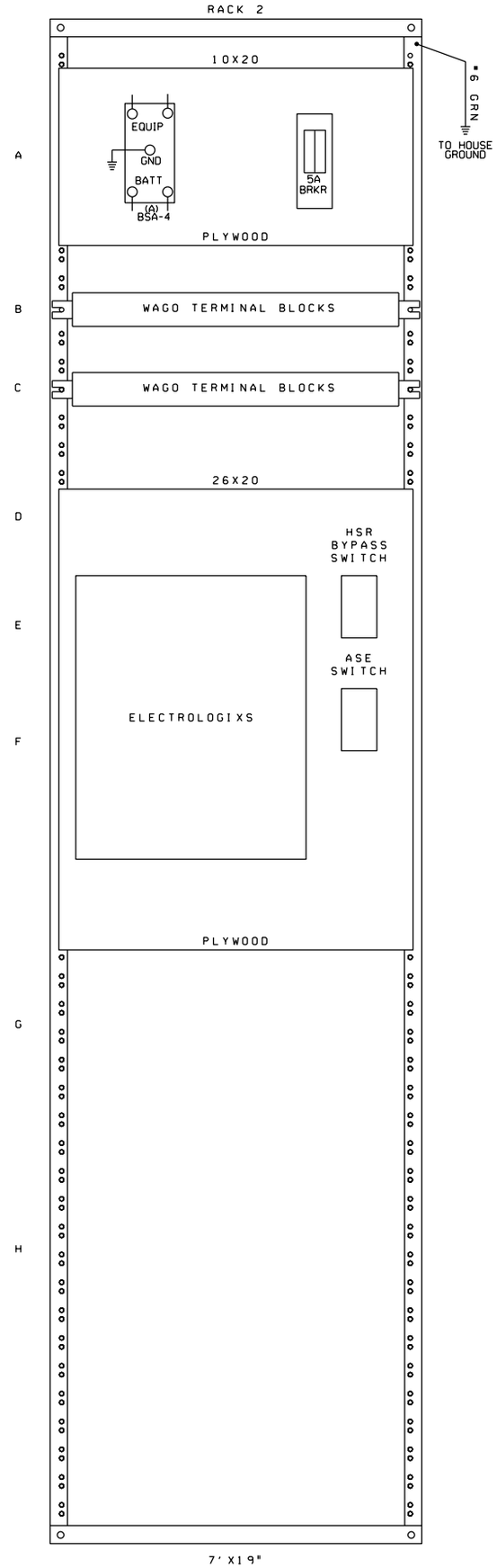

NEW SHEET

Designed: 09/27/12

TIER IS PHASE 1 M.P. 239.70 TO M.P. 255.35 TO UPGRADE XING TO 4 QUAD WITH EGMS, VARIOUS C.P.'S

Rec#: WO#: 10804
IS: NBT/ / /NST/MJF

CIRCUIT MODIFICATIONS ARE NOT TO BE MADE WITHOUT AUTHORITY FROM THE OFFICE OF SIGNAL DESIGN

Date:	09/27/12
Des:	NST
Chk:	NBT
AFE:	10804

UNION PACIFIC RAILROAD

BRIGHTON, ILLINOIS
BRIGHTON BUNKER HILL ROAD
SPRINGFIELD SUBDIVISION

Office of AVP Engineering - Signal Omaha, Nebraska

Sh.:	10D
DOT	294417H
MP:	244.76
ID:	CSL24476.10DX

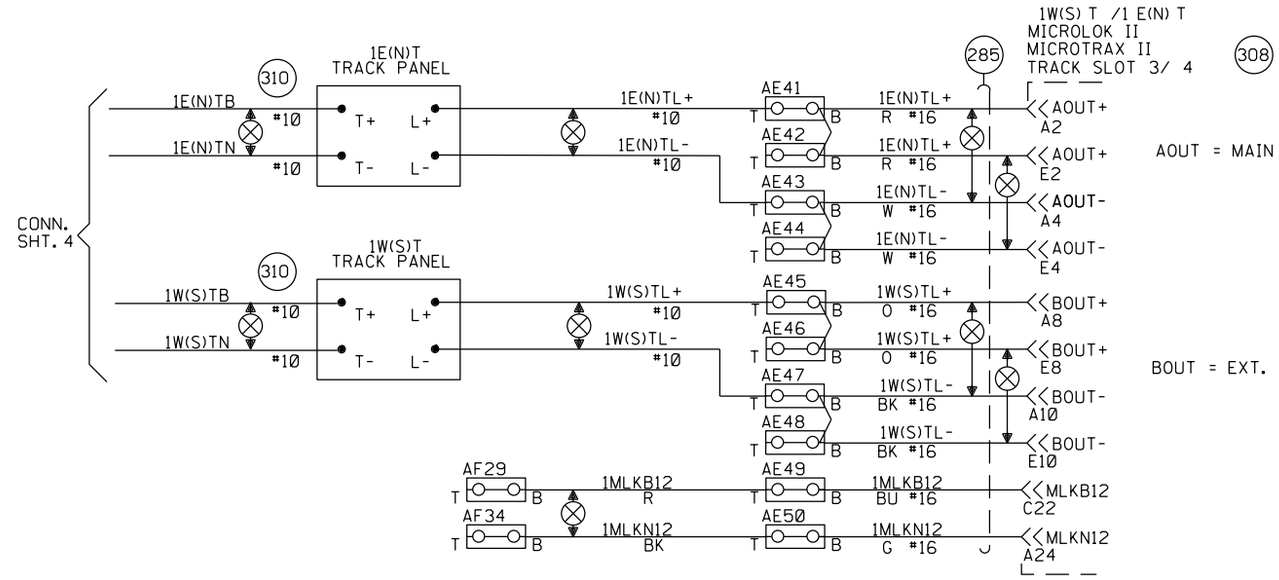

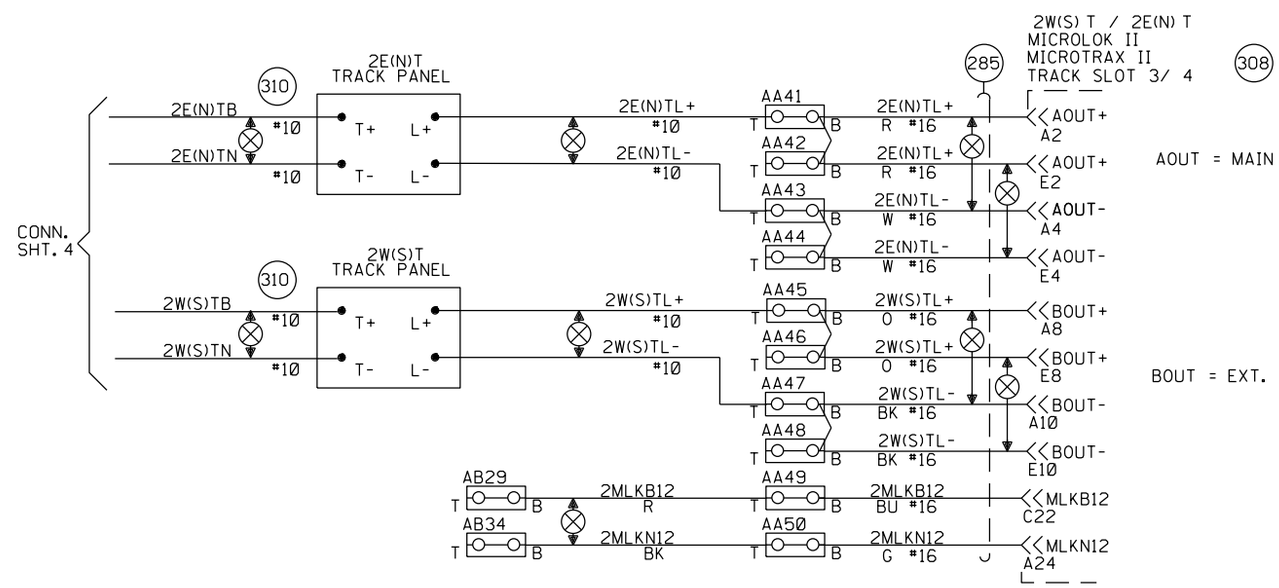

NOTES:

EAST= (N)ORTH.
WEST= (S)OUTH.

⊘ = OBSERVE CORRECT POLARITY. EQUIPMENT WILL BE DAMAGED IF CONNECTIONS ARE REVERSED

ENSURE TRACK POLARITY IS TRANSPOSED ACROSS ALL INSULATED JOINTS.

⧗ = TEST TERMINALS MUST BE INSTALLED ON ALL WIRING CONNECTED TO EXTERNAL CABLES (EXCEPT TRACK AND A.C. POWER WIRES).

SHOW ACTUAL DED INSTALLED LOCATION ON DRAWING.

NEW SHEET

Designed: 09/27/12
TIER IS PHASE 1 M.P. 239.70 TO M.P. 255.35 TO UPGRADE XING TO 4 QUAD WITH EGMS, VARIOUS C.P.'S
Rec#: WO#: 10804
IS: NBT / / /NST/MJF

MODIFICATION LEVEL	
Q. A. LAST LEVEL CHECKED	DS
LAST LEVEL MOD THIS TYPICAL	DS
LAST LEVEL BY DESIGNER	DU
CHANGED FROM TYPICAL?	Y

REV 8/20/10 1TMLHBINTU.1S

CIRCUIT MODIFICATIONS ARE NOT TO BE MADE WITHOUT AUTHORITY FROM THE OFFICE OF SIGNAL DESIGN

Date: 09/27/12
Des: NST
Chk: NBT
AFE: 10804

UNION PACIFIC RAILROAD
BRIGHTON, ILLINOIS
BRIGHTON BUNKER HILL ROAD
SPRINGFIELD SUBDIVISION
Office of AVP Engineering - Signal Omaha, Nebraska

Sh.: 11
DOT 294417H
MP: 244.76
ID: CSL24476.11S

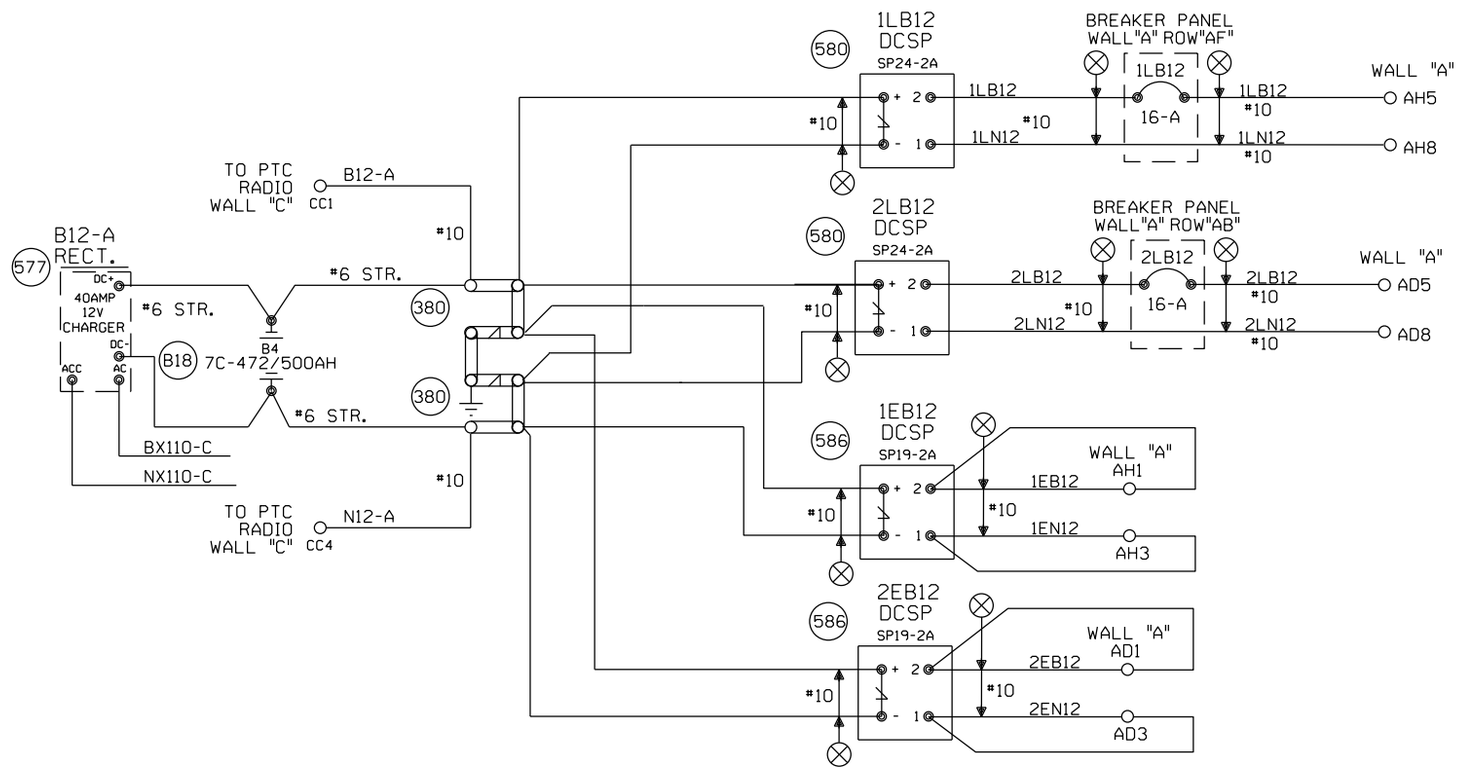

NEW SHEET

					Designed: 09/27/12 TIER IS PHASE 1 M.P. 239.70 TO M.P. 255.35 TO UPGRADE XING TO 4 QUAD WITH EGMS, VARIOUS C.P.'S Rec#: WO#: 10804 IS: NBT / / /NST/MJF	MODIFICATION LEVEL		CIRCUIT MODIFICATIONS ARE NOT TO BE MADE WITHOUT AUTHORITY FROM THE OFFICE OF SIGNAL DESIGN	Date: 09/27/12 Des: NST Chk: NBT AFE: 10804	UNION PACIFIC RAILROAD BRIGHTON, ILLINOIS BRIGHTON BUNKER HILL ROAD SPRINGFIELD SUBDIVISION Office of AVP Engineering - Signal Omaha, Nebraska	Sh.: 12 DOT 294417H MP: 244.76 ID: CSL24476.12S
						Q. A. LAST LEVEL CHECKED	DU				
						LAST LEVEL MOD THIS TYPICAL	DU				
						LAST LEVEL BY DESIGNER	DU				
						CHANGED FROM TYPICAL? REV 01.24.11 4K SEARAC.2	Y				

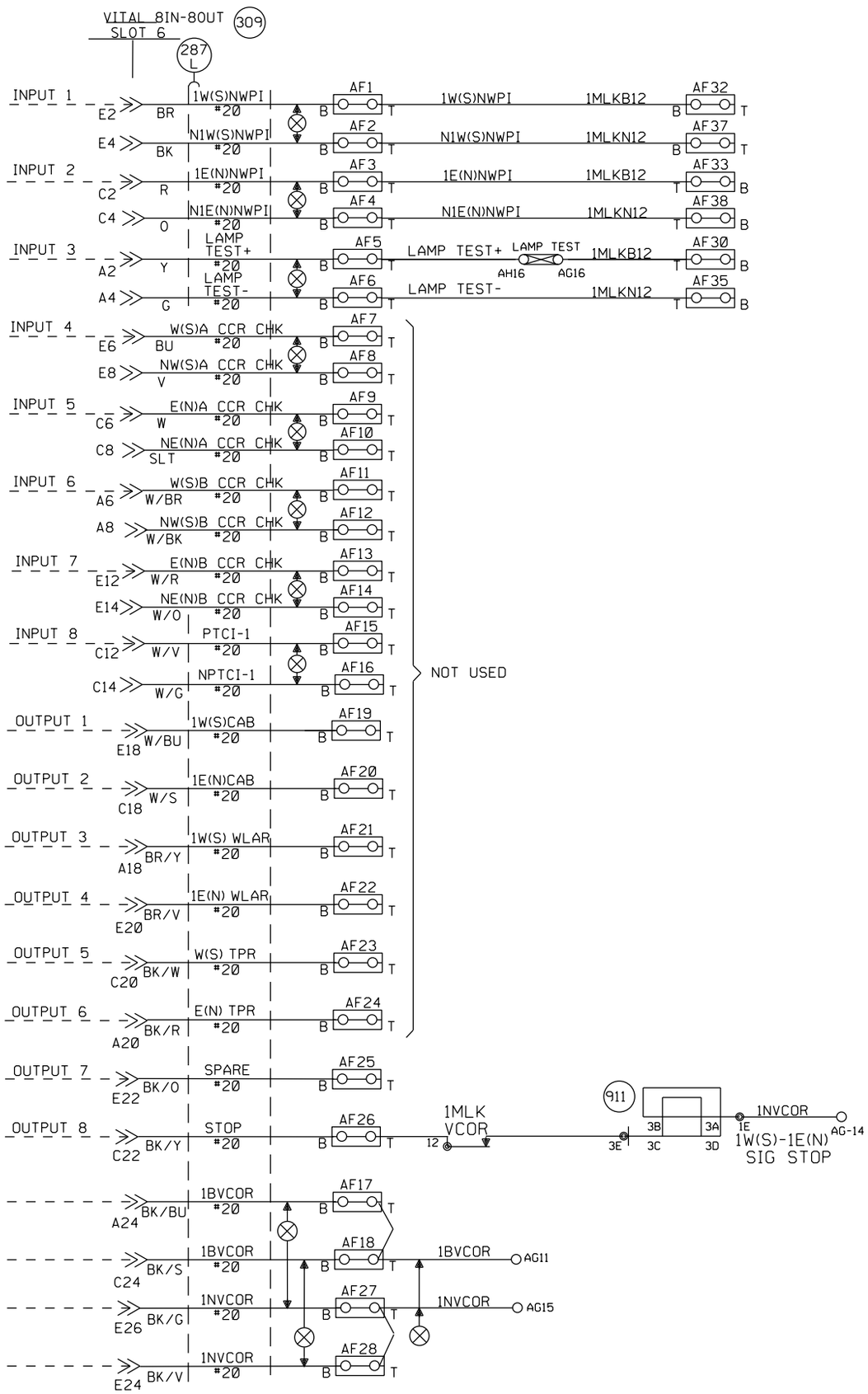

1W(S)-1E(N)T

NEW SHEET

Designed: 09/27/12

TIER 1S PHASE 1 M.P. 239.70 TO M.P. 255.35 TO UPGRADE XING TO 4 QUAD WITH EGMS, VARIOUS C.P.'S

Rec*: WO*: 10804
IS: NBT / / /NST/MJF

MODIFICATION LEVEL	
Q. A. LAST LEVEL CHECKED	DU
LAST LEVEL MOD THIS TYPICAL	DU
LAST LEVEL BY DESIGNER	DU
CHANGED FROM TYPICAL?	Y

REV 8/20/10 1TMLHBINTU. 3A

CIRCUIT MODIFICATIONS ARE NOT TO BE MADE WITHOUT AUTHORITY FROM THE OFFICE OF SIGNAL DESIGN

Date: 09/27/12
Des: NST
Chk: NBT
AFE: 10804

UNION PACIFIC RAILROAD

BRIGHTON, ILLINOIS
BRIGHTON BUNKER HILL ROAD
SPRINGFIELD SUBDIVISION

Office of AVP Engineering - Signal Omaha, Nebraska

Sh.: 13A
DOT 294417H
MP: 244.76
ID: CSL24476.13AS

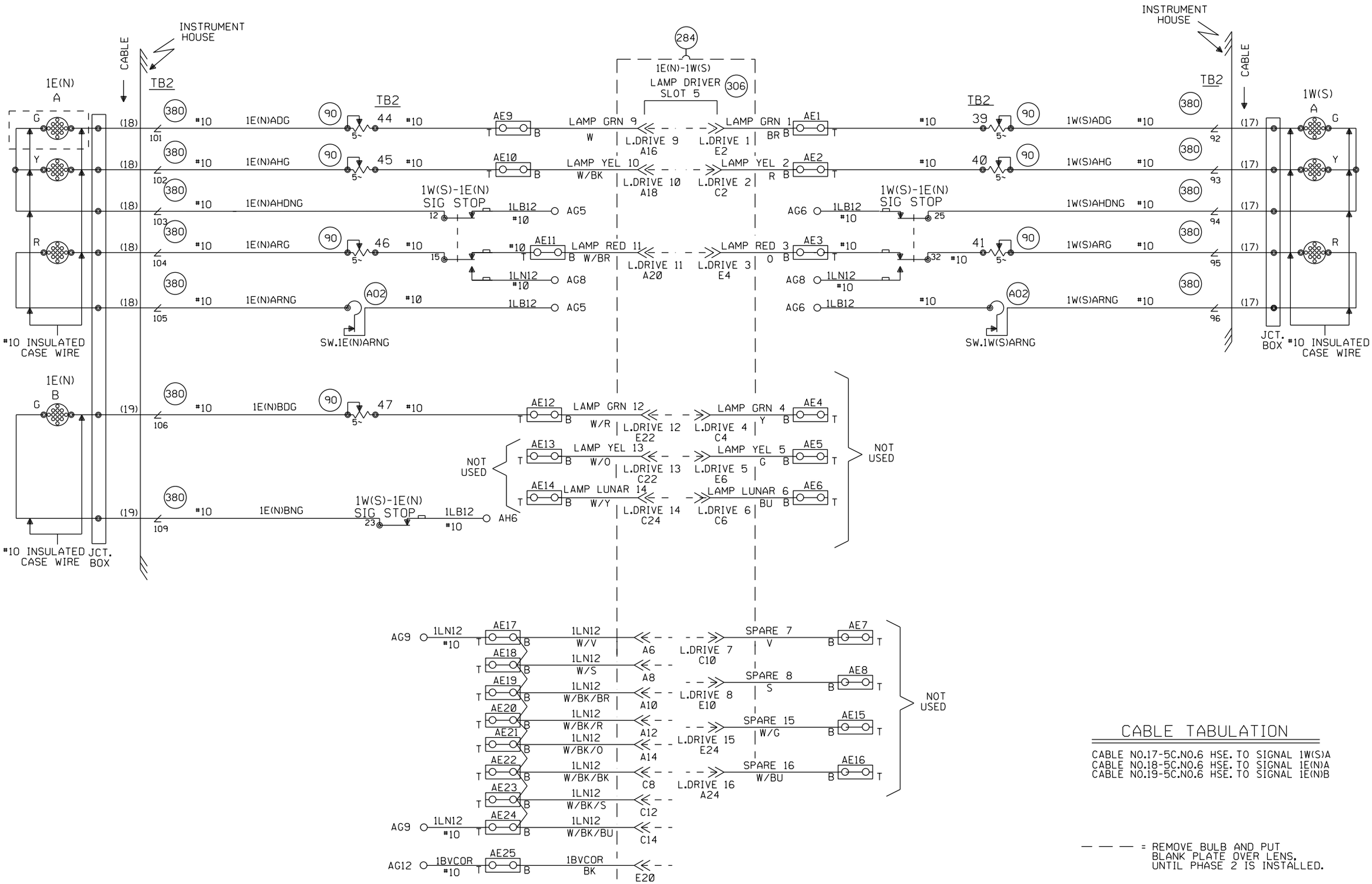

CABLE TABULATION

CABLE NO.17-5C.NO.6 HSE. TO SIGNAL 1W(S)A
CABLE NO.18-5C.NO.6 HSE. TO SIGNAL 1E(N)A
CABLE NO.19-5C.NO.6 HSE. TO SIGNAL 1E(N)B

— — — = REMOVE BULB AND PUT BLANK PLATE OVER LENS, UNTIL PHASE 2 IS INSTALLED.

NEW SHEET

Designed: 09/27/12

TIER 1S PHASE 1 M.P. 239.70 TO M.P. 255.35 TO UPGRADE XING TO 4 QUAD WITH EGMS, VARIOUS C.P.'S

Rec#: WO#: 10804
IS: NBT / / /NST/MJF

MODIFICATION LEVEL	
O.A. LAST LEVEL CHECKED	DU
LAST LEVEL MOD THIS TYPICAL	DU
LAST LEVEL BY DESIGNER	DU
CHANGED FROM TYPICAL?	Y

REV 8/20/10 1TMLHBINTUGS.3

CIRCUIT MODIFICATIONS ARE NOT TO BE MADE WITHOUT AUTHORITY FROM THE OFFICE OF SIGNAL DESIGN

Date: 09/27/12
Des: NST
Chk: NBT
AFE: 10804

UNION PACIFIC RAILROAD

BRIGHTON, ILLINOIS
BRIGHTON BUNKER HILL ROAD
SPRINGFIELD SUBDIVISION

Office of AVP Engineering - Signal — Omaha, Nebraska

Sh.: 13
DOT 294417H
MP: 244.76
ID: CSL24476.13S

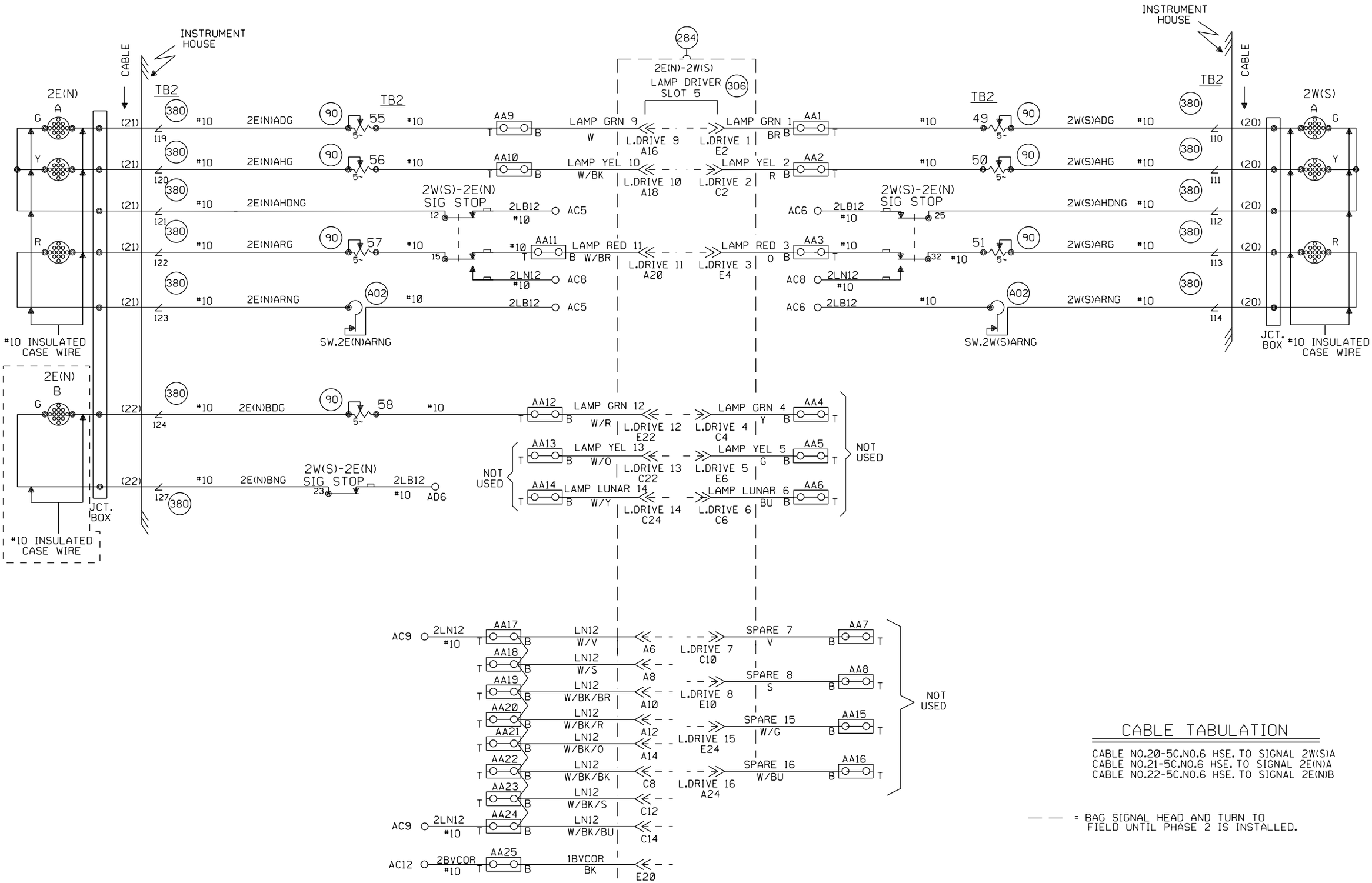

CABLE TABULATION

CABLE NO.20-5C.NO.6 HSE. TO SIGNAL 2W(S)A
CABLE NO.21-5C.NO.6 HSE. TO SIGNAL 2E(N)A
CABLE NO.22-5C.NO.6 HSE. TO SIGNAL 2E(N)B

— — = BAG SIGNAL HEAD AND TURN TO FIELD UNTIL PHASE 2 IS INSTALLED.

NEW SHEET

Designed: 09/27/12

TIER IS PHASE 1 M.P. 239.70 TO M.P. 255.35 TO UPGRADE XING TO 4 QUAD WITH EGMS, VARIOUS C.P.'S

Rec#: WO#: 10804
IS: NBT / / /NST/MJF

MODIFICATION LEVEL	
O. A. LAST LEVEL CHECKED	DU
LAST LEVEL MOD THIS TYPICAL	DU
LAST LEVEL BY DESIGNER	DU
CHANGED FROM TYPICAL?	Y

REV 8/20/10 1TMLHBINTUGS.3

CIRCUIT MODIFICATIONS ARE NOT TO BE MADE WITHOUT AUTHORITY FROM THE OFFICE OF SIGNAL DESIGN

Date: 09/27/12
Des: NST
Chk: NBT
AFE: 10804

UNION PACIFIC RAILROAD

BRIGHTON, ILLINOIS
BRIGHTON BUNKER HILL ROAD
SPRINGFIELD SUBDIVISION

Office of AVP Engineering - Signal — Omaha, Nebraska

Sh.: 14
DOT 294417H
MP: 244.76
ID: CSL24476.14S

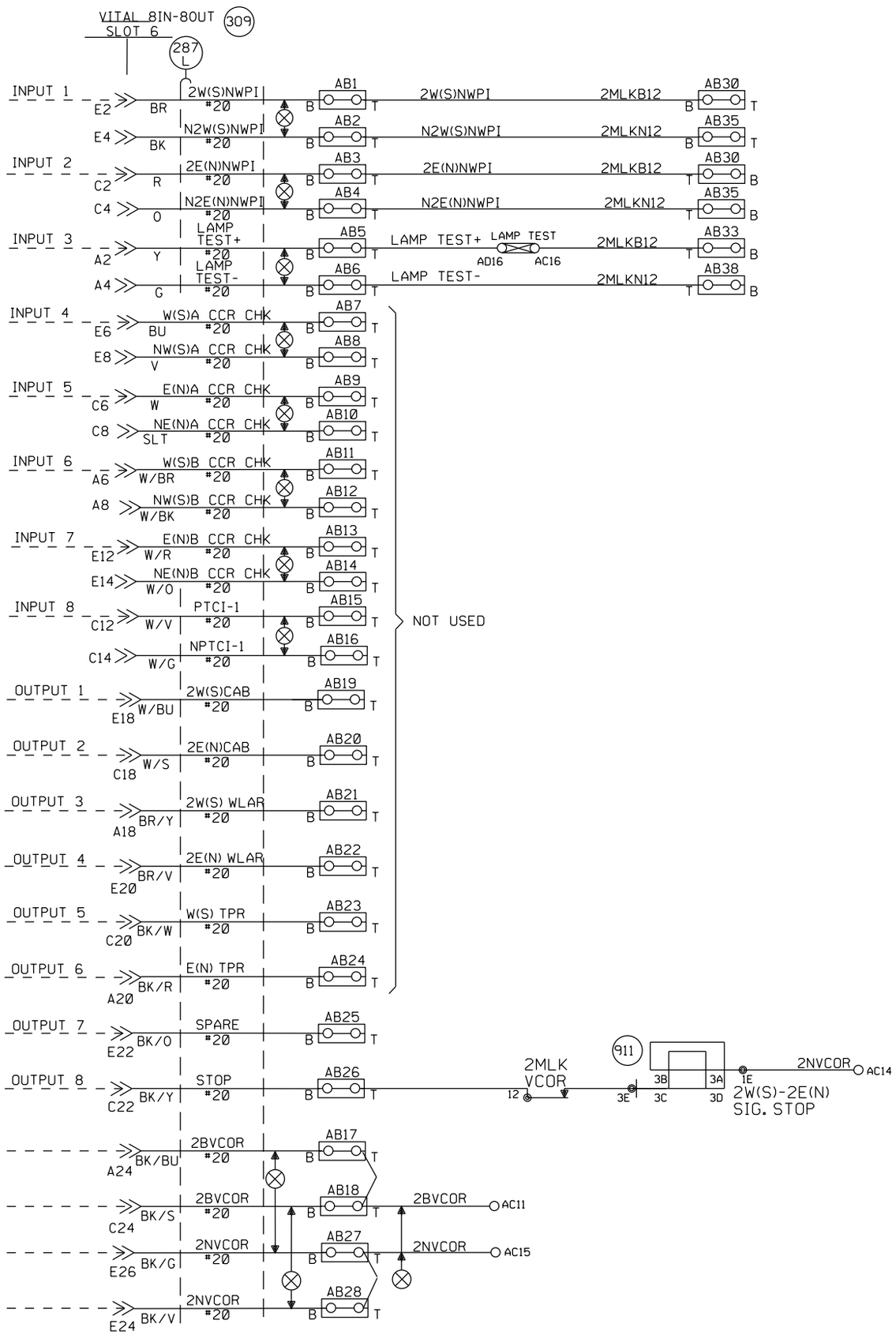

2W(S)-2E(N)T

NEW SHEET

Designed: 09/27/12 TIER IS PHASE 1 M.P. 239.70 TO M.P. 255.35 TO UPGRADE XING TO 4 QUAD WITH EGMS, VARIOUS C.P.'S Rec#: WO#: 10804 IS: NBT / / /NST/MJF	MODIFICATION LEVEL		CIRCUIT MODIFICATIONS ARE NOT TO BE MADE WITHOUT AUTHORITY FROM THE OFFICE OF SIGNAL DESIGN	Date: 09/27/12 Des: NST Chk: NBT AFE: 10804	UNION PACIFIC RAILROAD BRIGHTON, ILLINOIS BRIGHTON BUNKER HILL ROAD SPRINGFIELD SUBDIVISION Office of AVP Engineering - Signal Omaha, Nebraska	Sh.: 14A DOT 294417H MP: 244.76 ID: CSL24476.14AS
	Q. A. LAST LEVEL CHECKED	DU				
	LAST LEVEL MOD THIS TYPICAL	DU				
	LAST LEVEL BY DESIGNER	DU				
	CHANGED FROM TYPICAL? REV 8/20/10 1TMLHBINTU.3A	Y				

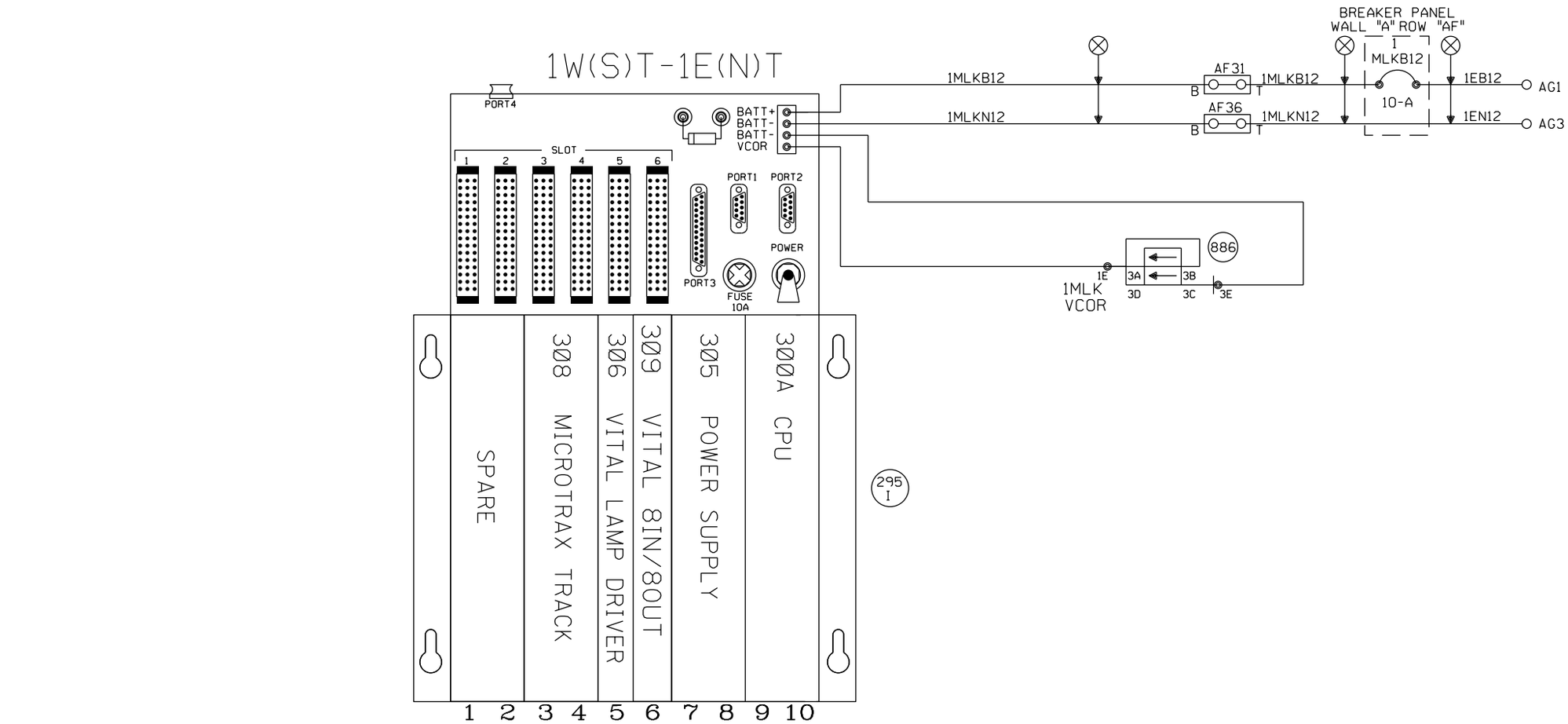

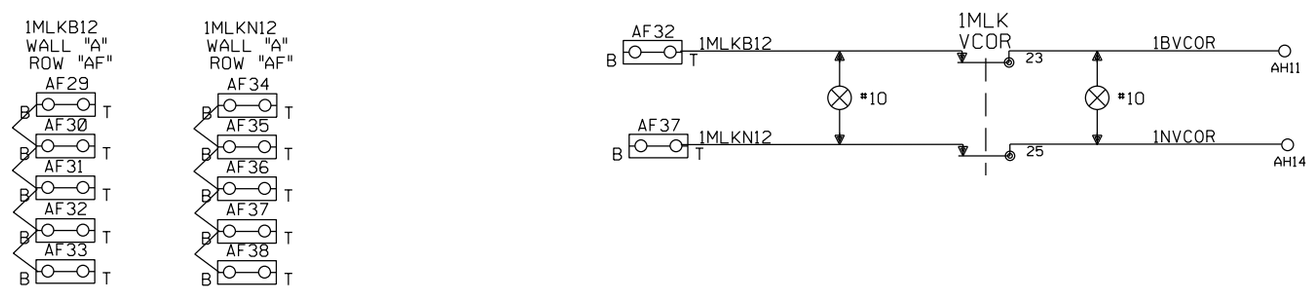

NEW SHEET

					Designed: 09/27/12 TIER 1S PHASE 1 M.P. 239.70 TO M.P. 255.35 TO UPGRADE XING TO 4 QUAD WITH EGMS, VARIOUS C.P.'S Rec#: WO#: 10804 IS: NBT / / /NST/MJF	MODIFICATION LEVEL		CIRCUIT MODIFICATIONS ARE NOT TO BE MADE WITHOUT AUTHORITY FROM THE OFFICE OF SIGNAL DESIGN	Date: 09/27/12 Des: NST Chk: NBT AFE: 10804	UNION PACIFIC RAILROAD BRIGHTON, ILLINOIS BRIGHTON BUNKER HILL ROAD SPRINGFIELD SUBDIVISION Office of AVP Engineering - Signal Omaha, Nebraska	Sh.: 15 DOT 294417H MP: 244.76 ID: CSL24476.15S
						Q. A. LAST LEVEL CHECKED	DU			
						LAST LEVEL MOD THIS TYPICAL	DU			
						LAST LEVEL BY DESIGNER	DU			
						CHANGED FROM TYPICAL? REV 8/20/10 1TMLHBINTU.4	Y			

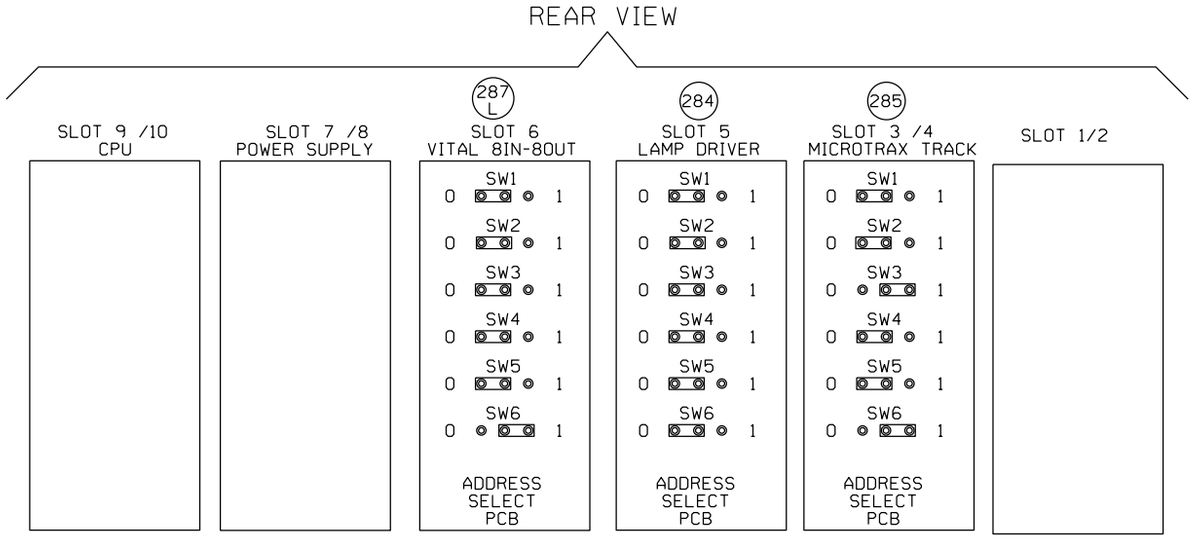

NOTE: FOR PTC COMPATIBLE CPU JUMPER SETTINGS REFER TO ANSALDO MANUAL 1D1.0028 PAGE 1-26 1-27 1-28 REV.1 DATE 8/2009

IF BOX CHECKED SET APPROPRIATE PROG. ID

ML8UP5060 REV.N		
15 SEC SLOW PICK ET TO PREVENT JOINT HOP		USE WHEN INTERFACING MICRO-ECODE TO GETS ECODE
15 SEC SLOW PICK WT TO PREVENT JOINT HOP		USE WHEN INTERFACING MICRO-ECODE TO GETS ECODE
APPROACH TO #30 WEST?		(SET PROG ID 1)
APPROACH TO #30 EAST?		(SET PROG ID 2)
Y/G W/B SEND Y/FG EAST?		(SET PROG ID 3)
Y/G E/B SEND Y/FG WEST?	X	(SET PROG ID 5)
Y/G W/B SEND GREEN EAST?		(SET PROG ID 4)
Y/G E/B SEND GREEN WEST?		(SET PROG ID 6)
Y/FG W/B SEND GREEN EAST		(SET PROG ID 8)
Y/FG E/B SEND GREEN WEST		(SET PROG ID 9)
PROGRAM ID 1 (BINARY 1)		
PROGRAM ID 2 (BINARY 2)		
PROGRAM ID 3 (BINARY 4)		
PROGRAM ID 4 (BINARY 8)		
PROGRAM ID 5 (BINARY 16)	X	
PROGRAM ID 6 (BINARY 32)		
PROGRAM ID 7 (BINARY 64)		(SET TO DISABLE VIO8 CAB)
PROGRAM ID 8 (BINARY 128)		
PROGRAM ID 9 (BINARY 256)		
PROGRAM ID 10 (BINARY 512)		(MUST BE CLEAR)
PROGRAM ID 11 (BINARY 1024)	X	(MUST BE SET)
PROGRAM ID 12 (BINARY 2048)		(SET TO DISABLE INCAND. SIG BOARD)
PROGRAM ID 13 (BINARY 4096)	X	(SET TO DISABLE LED SIG BOARD)
PROGRAM ID 14 (BINARY 8192)		
PROGRAM ID 15 (BINARY 16384)		
PROGRAM ID 16 (BINARY 32768)		
PROGRAM ID 17 (BINARY 65536)		
PROGRAM ID 18 (BINARY 131072)		
PROGRAM ID 19 (BINARY 262144)		
PROGRAM ID 20 (BINARY 524288)		
PROGRAM ID 21 (BINARY 1048576)	X	
WEST TK UP SEND C5 EAST	X	
REC C5 W TK SEND C5 EAST		
EAST TK UP SEND C5 WEST	X	
REC C5 E TK SEND C5 WEST		
W(S) "B" HEAD FLASHING RED		(SET PROG ID 14)
W(S) "B" HEAD LUNAR		(SET PROG ID 15)
W(S) "B" HEAD YELLOW		(SET PROG ID 16)
W(S) "B" HEAD GREEN		(SET PROG ID 17)
E(N) "B" HEAD FLASHING RED		(SET PROG ID 18)
E(N) "B" HEAD LUNAR		(SET PROG ID 19)
E(N) "B" HEAD YELLOW		(SET PROG ID 20)
E(N) "B" HEAD GREEN	X	(SET PROG ID 21)
E(N) C5 APPLIT	X	(ENABLE APPLIT W(S) SIG W/LOSS OF C5)
W(S) C5 APPLIT	X	(ENABLE APPLIT E(N) SIG W/LOSS OF C5)

PLACE AN "X" IN THE BOX TO REPRESENT A SET STATE.

1W(S)-1E(N)T

NEW SHEET

Designed: 09/27/12
TIER IS PHASE 1 M.P. 239.70 TO M.P. 255.35 TO UPGRADE XING TO 4 QUAD WITH EGMS, VARIOUS C.P.'S
Rec#: WO#: 10804
IS: NBT / / /NST/MJF

MODIFICATION LEVEL	
Q. A. LAST LEVEL CHECKED	DU
LAST LEVEL MOD THIS TYPICAL	DU
LAST LEVEL BY DESIGNER	DU
CHANGED FROM TYPICAL?	Y

REV 8/20/10 1TMLHBINTU.5

CIRCUIT MODIFICATIONS ARE NOT TO BE MADE WITHOUT AUTHORITY FROM THE OFFICE OF SIGNAL DESIGN

Date: 09/27/12
Des: NST
Chk: NBT
AFE: 10804

UNION PACIFIC RAILROAD
BRIGHTON, ILLINOIS
BRIGHTON BUNKER HILL ROAD
SPRINGFIELD SUBDIVISION
Office of AVP Engineering - Signal Omaha, Nebraska

Sh.: 16
DOT 294417H
MP: 244.76
ID: CSL24476.16S

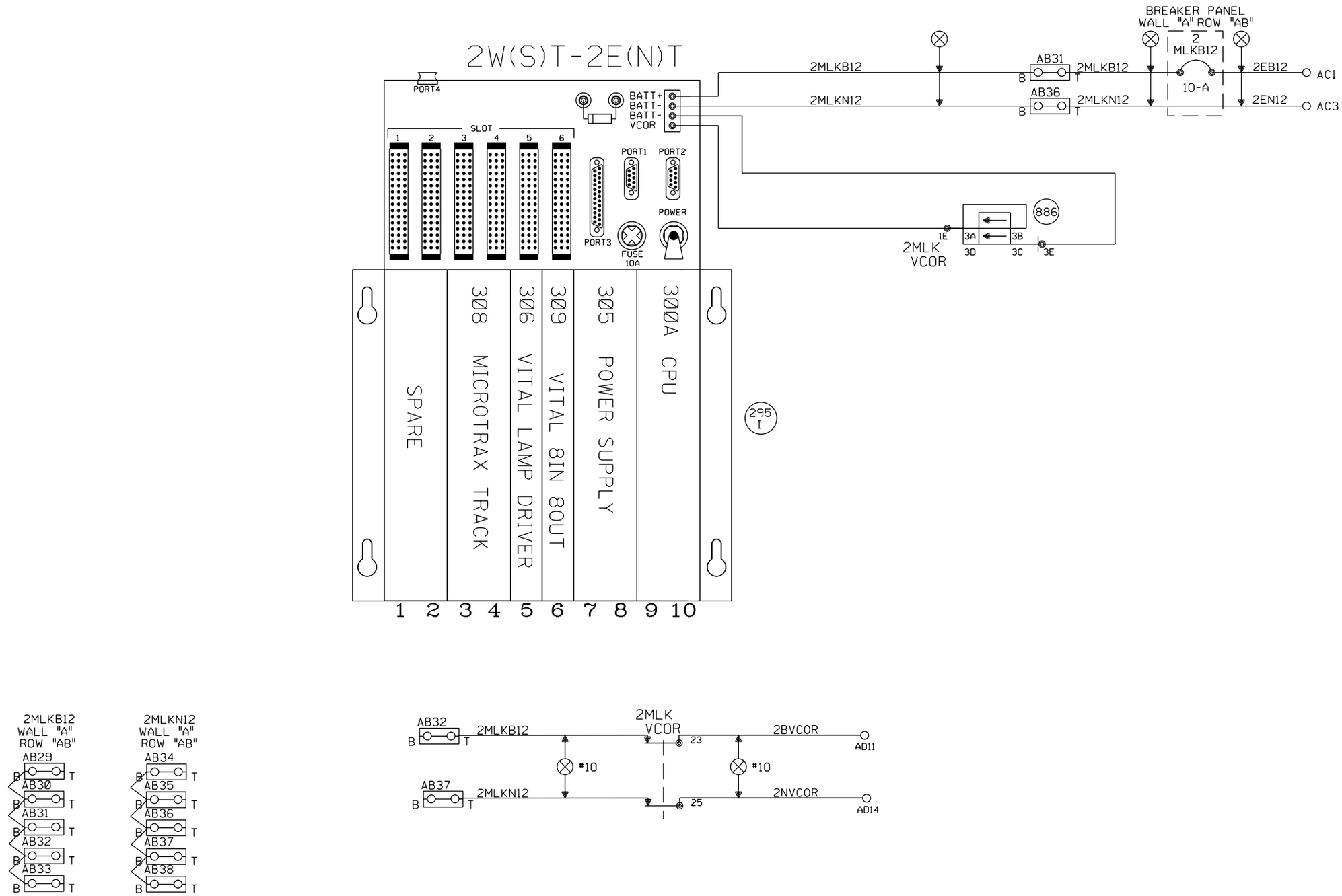

NEW SHEET

					Designed: 09/27/12 TIER IS PHASE 1 M.P. 239.70 TO M.P. 255.35 TO UPGRADE XING TO 4 QUAD WITH EGMS, VARIOUS C.P.'S Rec#: WO#: 10804 IS: NBT / / /NST/MJF	MODIFICATION LEVEL		CIRCUIT MODIFICATIONS ARE NOT TO BE MADE WITHOUT AUTHORITY FROM THE OFFICE OF SIGNAL DESIGN	Date: 09/27/12 Des: NST Chk: NBT AFE: 10804	UNION PACIFIC RAILROAD BRIGHTON, ILLINOIS BRIGHTON BUNKER HILL ROAD SPRINGFIELD SUBDIVISION Office of AVP Engineering - Signal Omaha, Nebraska	Sh.: 17 DOT 294417H MP: 244.76 ID: CSL24476.17S
						Q. A. LAST LEVEL CHECKED	DU			
						LAST LEVEL MOD THIS TYPICAL	DU			
						LAST LEVEL BY DESIGNER	DU			
						CHANGED FROM TYPICAL? REV 8/20/10 1TMLHBINTU.4	Y			

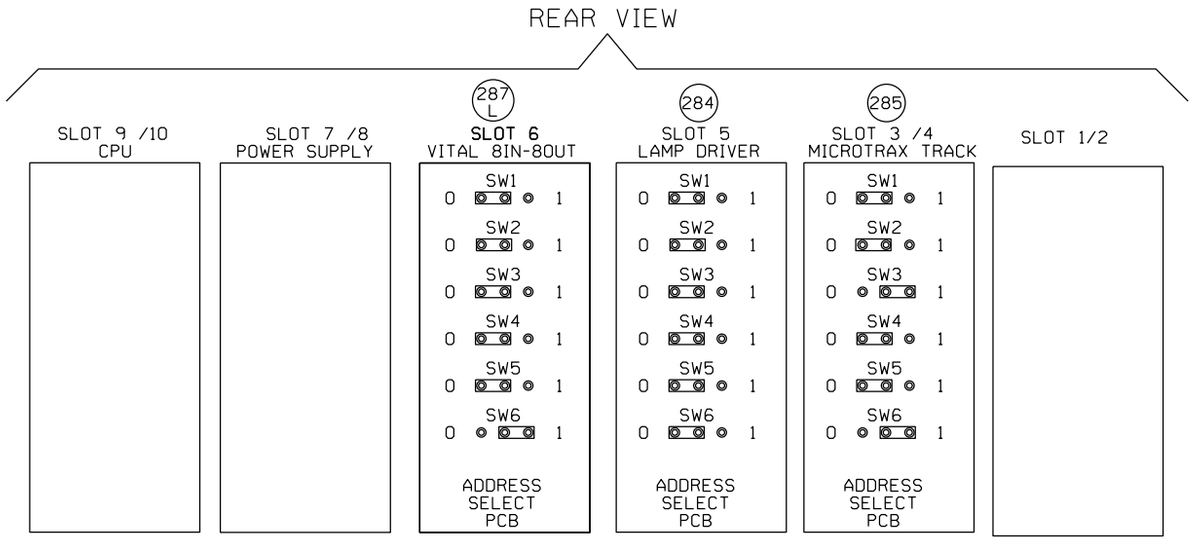

NOTE: FOR PTC COMPATIBLE CPU JUMPER SETTINGS REFER TO ANSALDO MANUAL 1D1.0028 PAGE 1-26 1-27 1-28 REV.1 DATE 8/2009

IF BOX CHECKED SET APPROPRIATE PROG. ID

ML8UP5060 REV.N		
15 SEC SLOW PICK ET TO PREVENT JOINT HOP		USE WHEN INTERFACING MICRO-ECODE TO GETS ECODE
15 SEC SLOW PICK WT TO PREVENT JOINT HOP		USE WHEN INTERFACING MICRO-ECODE TO GETS ECODE
APPROACH TO #30 WEST?		(SET PROG ID 1)
APPROACH TO #30 EAST?		(SET PROG ID 2)
Y/G W/B SEND Y/FG EAST?		(SET PROG ID 3)
Y/G E/B SEND Y/FG WEST?	X	(SET PROG ID 5)
Y/G W/B SEND GREEN EAST?		(SET PROG ID 4)
Y/G E/B SEND GREEN WEST?		(SET PROG ID 6)
Y/FG W/B SEND GREEN EAST		(SET PROG ID 8)
Y/FG E/B SEND GREEN WEST		(SET PROG ID 9)
PROGRAM ID 1 (BINARY 1)		
PROGRAM ID 2 (BINARY 2)		
PROGRAM ID 3 (BINARY 4)		
PROGRAM ID 4 (BINARY 8)		
PROGRAM ID 5 (BINARY 16)	X	
PROGRAM ID 6 (BINARY 32)		
PROGRAM ID 7 (BINARY 64)		(SET TO DISABLE VIO8 CAB)
PROGRAM ID 8 (BINARY 128)		
PROGRAM ID 9 (BINARY 256)		
PROGRAM ID 10 (BINARY 512)		(MUST BE CLEAR)
PROGRAM ID 11 (BINARY 1024)	X	(MUST BE SET)
PROGRAM ID 12 (BINARY 2048)		(SET TO DISABLE INCAND. SIG BOARD)
PROGRAM ID 13 (BINARY 4096)	X	(SET TO DISABLE LED SIG BOARD)
PROGRAM ID 14 (BINARY 8192)		
PROGRAM ID 15 (BINARY 16384)		
PROGRAM ID 16 (BINARY 32768)		
PROGRAM ID 17 (BINARY 65536)		
PROGRAM ID 18 (BINARY 131072)		
PROGRAM ID 19 (BINARY 262144)		
PROGRAM ID 20 (BINARY 524288)		
PROGRAM ID 21 (BINARY 1048576)	X	
WEST TK UP SEND C5 EAST	X	
REC C5 W TK SEND C5 EAST		
EAST TK UP SEND C5 WEST	X	
REC C5 E TK SEND C5 WEST		
W(S) "B" HEAD FLASHING RED		(SET PROG ID 14)
W(S) "B" HEAD LUNAR		(SET PROG ID 15)
W(S) "B" HEAD YELLOW		(SET PROG ID 16)
W(S) "B" HEAD GREEN		(SET PROG ID 17)
E(N) "B" HEAD FLASHING RED		(SET PROG ID 18)
E(N) "B" HEAD LUNAR		(SET PROG ID 19)
E(N) "B" HEAD YELLOW		(SET PROG ID 20)
E(N) "B" HEAD GREEN	X	(SET PROG ID 21)
E(N) C5 APPLIT	X	(ENABLE APPLIT W(S) SIG W/LOSS OF C5)
W(S) C5 APPLIT	X	(ENABLE APPLIT E(N) SIG W/LOSS OF C5)

PLACE AN "X" IN THE BOX TO REPRESENT A SET STATE.

2W(S)-2E(N)T

NEW SHEET

Designed: 09/27/12
TIER IS PHASE 1 M.P. 239.70 TO M.P. 255.35 TO UPGRADE XING TO 4 QUAD WITH EGMS, VARIOUS C.P.'S
Rec*: WO*: 10804
IS: NBT /
/ /NST /MJF

MODIFICATION LEVEL	
Q. A. LAST LEVEL CHECKED	DU
LAST LEVEL MOD THIS TYPICAL	DU
LAST LEVEL BY DESIGNER	DU
CHANGED FROM TYPICAL?	Y

REV 8/20/10 1TMLHBINTU.5

CIRCUIT MODIFICATIONS ARE NOT TO BE MADE WITHOUT AUTHORITY FROM THE OFFICE OF SIGNAL DESIGN

Date: 09/27/12
Des: NST
Chk: NBT
AFE: 10804

UNION PACIFIC RAILROAD
BRIGHTON, ILLINOIS
BRIGHTON BUNKER HILL ROAD
SPRINGFIELD SUBDIVISION
Office of AVP Engineering - Signal Omaha, Nebraska

Sh.: 18
DOT 294417H
MP: 244.76
ID: CSL24476.18S

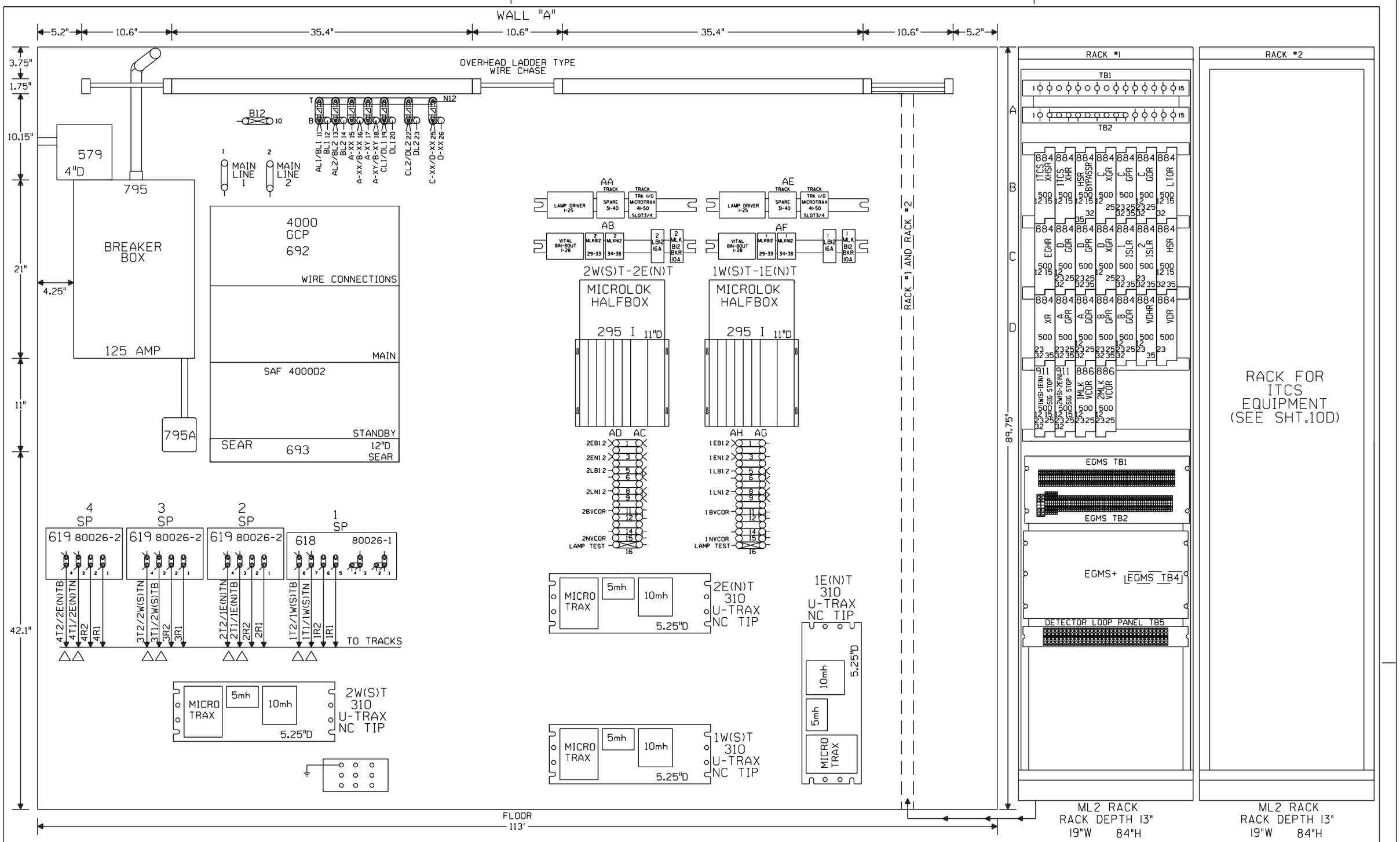

NOTE: RACK #1 & #2 ARE PERPENDICULAR TO "A" WALL

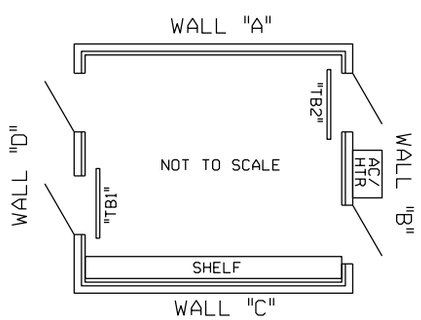

△ = FIELD VERIFY POLARITY

NOTE: ALL DIMENSIONS SHOWN ARE APPROXIMATE.

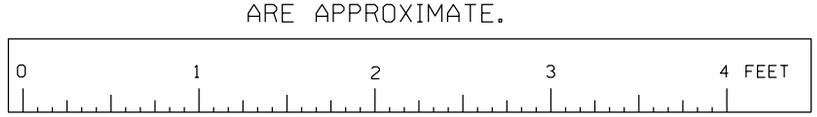

SCALE: 1.5 INCHES = 1 FOOT

NOTE: MICROTRAX TIP PANELS MUST BE 12" APART AND 12" FROM CPU CARDS.

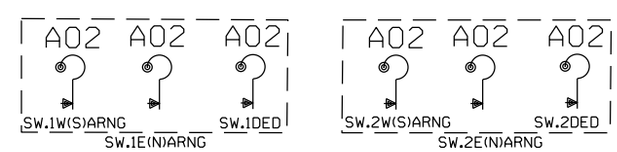

NOTE:
PLEASE SHOW WHERE LOCATED ON OUTSIDE OF HOUSE.

NEW SHEET

Designed: 09/27/12
TIER IS PHASE 1 M.P. 239.70 TO M.P. 255.35 TO UPGRADE XING TO 4 QUAD WITH EGMS, VARIOUS C.P.'S
Rec#: WO#: 10804
IS: NBT/ / NST/MJF

CIRCUIT MODIFICATIONS ARE NOT TO BE MADE WITHOUT AUTHORITY FROM THE OFFICE OF SIGNAL DESIGN

Date:	09/27/12
Des:	NST
Chk:	NBT
AFE:	10804

UNION PACIFIC RAILROAD
BRIGHTON, ILLINOIS
BRIGHTON BUNKER HILL ROAD
SPRINGFIELD SUBDIVISION
Office of AVP Engineering - Signal Omaha, Nebraska

Sh.:	19
DOT	294417H
MP:	244.76
ID:	CSL24476.19X

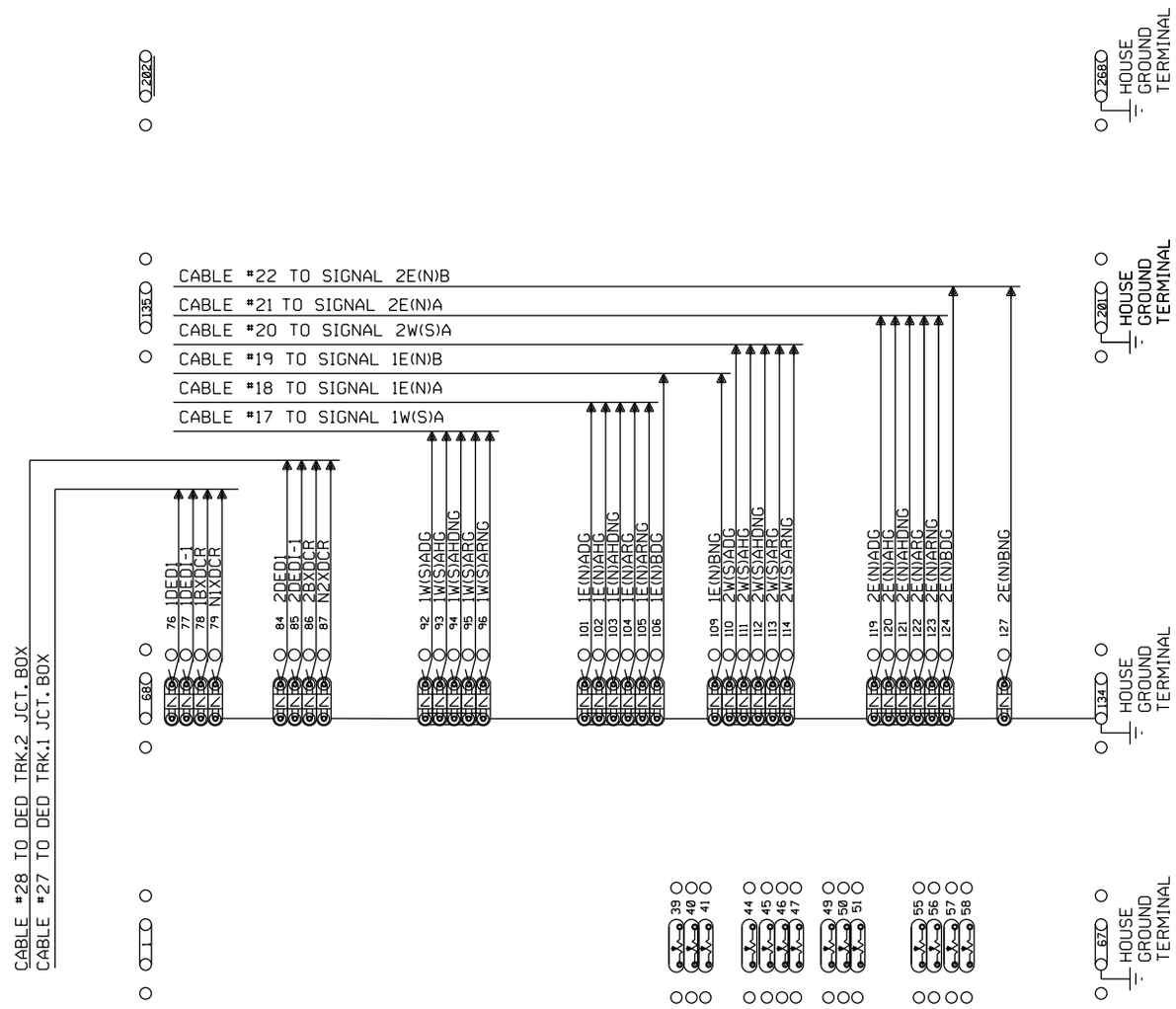

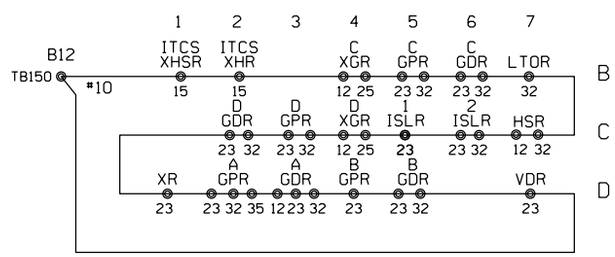

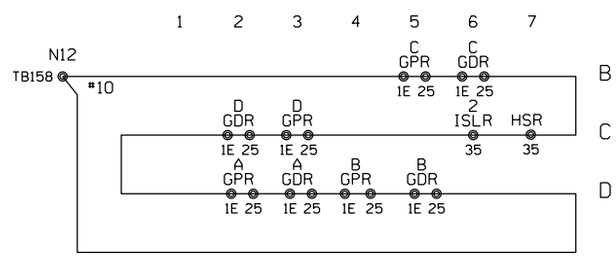

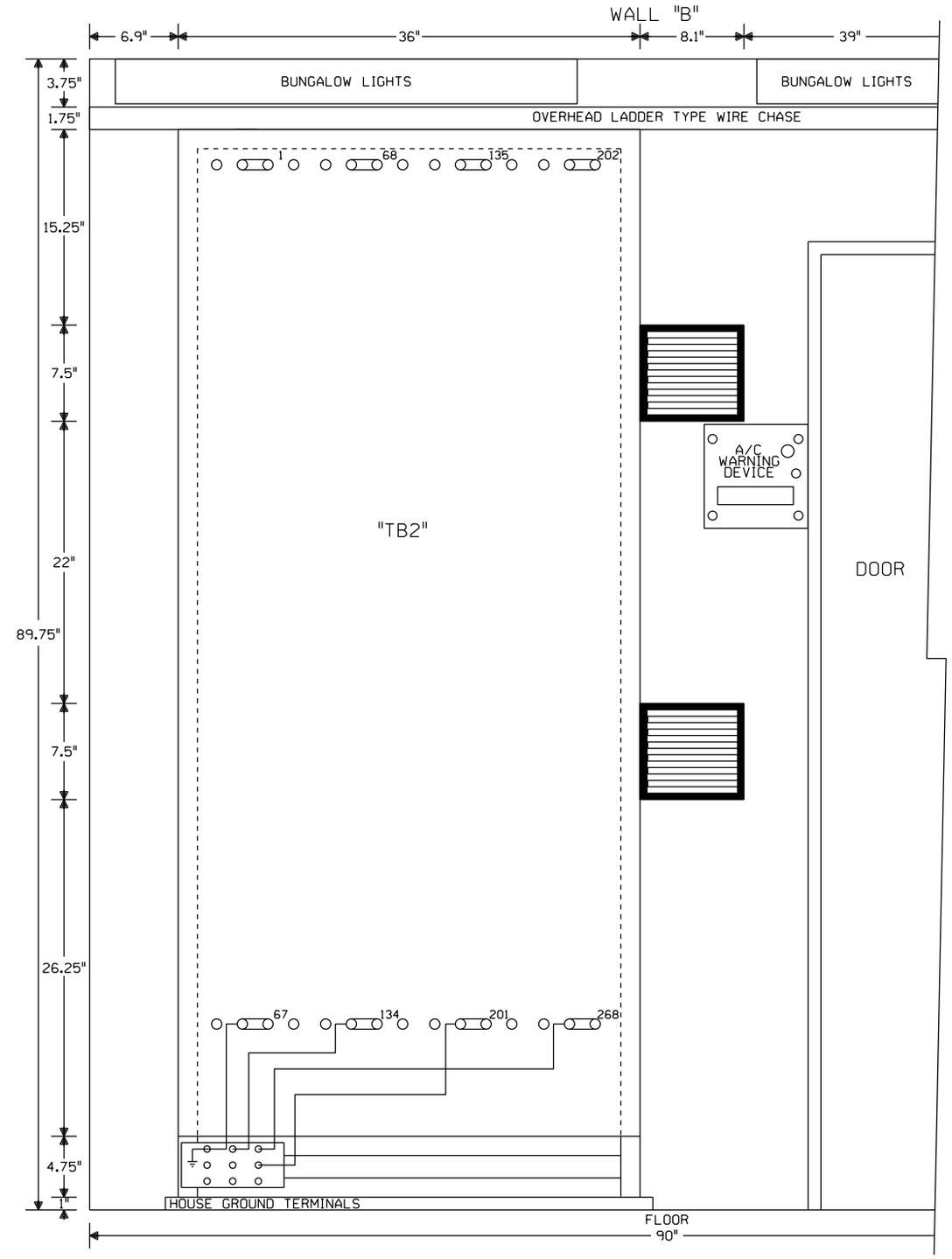

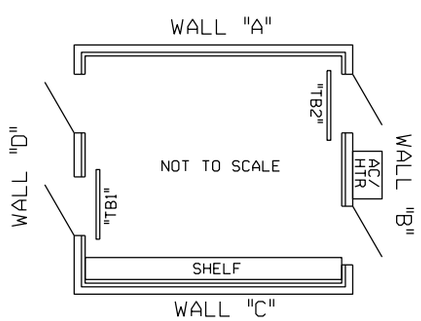

NOTE: ALL DIMENSIONS SHOWN ARE APPROXIMATE.

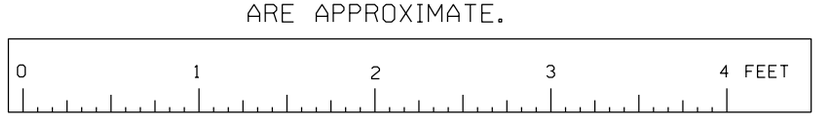

SCALE: 1.5 INCHES = 1 FOOT

NEW SHEET

Designed: 09/27/12

TIER 1S PHASE 1 M.P. 239.70 TO M.P. 255.35 TO UPGRADE XING TO 4 QUAD WITH EGMS, VARIOUS C.P.'S

Rec#: WO#: 10804
IS: NBT/ / /NST/MJF

CIRCUIT MODIFICATIONS ARE NOT TO BE MADE WITHOUT AUTHORITY FROM THE OFFICE OF SIGNAL DESIGN

Date: 09/27/12	
Des:	NST
Chk:	NBT
AFE:	10804

UNION PACIFIC RAILROAD

BRIGHTON, ILLINOIS
BRIGHTON BUNKER HILL ROAD
SPRINGFIELD SUBDIVISION

Office of AVP Engineering - Signal — Omaha, Nebraska

Sh.:	20
DOT	294417H
MP:	244.76
ID:	CSL24476.20X

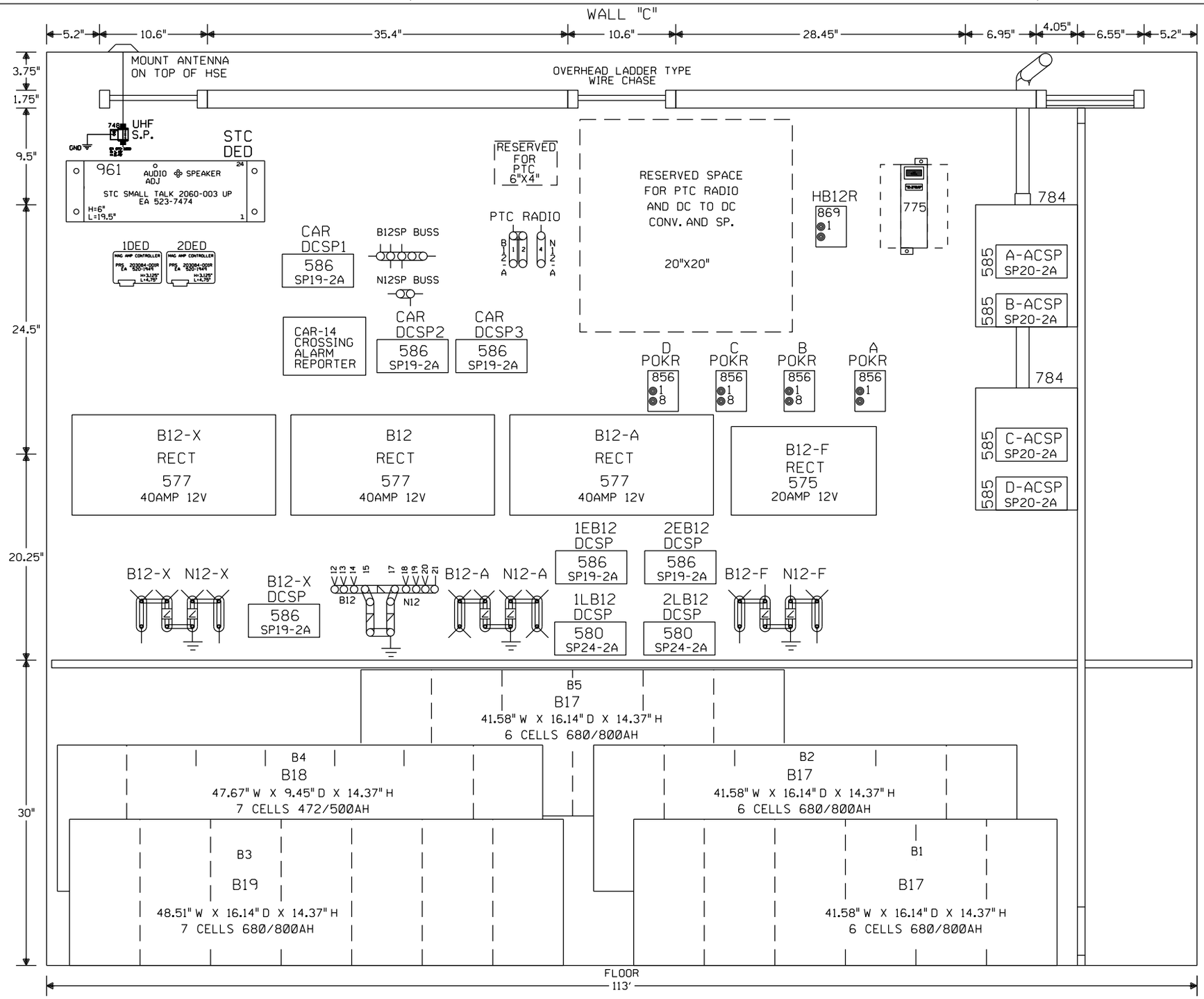

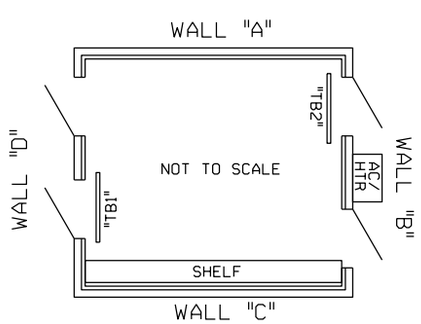

NOTE: ALL DIMENSIONS SHOWN ARE APPROXIMATE.

0 1 2 3 4 FEET

SCALE: 1.5 INCHES = 1 FOOT

NEW SHEET

Designed: 09/27/12
TIER 1S PHASE 1 M.P. 239.70 TO M.P. 255.35 TO UPGRADE XING TO 4 QUAD WITH EGMS, VARIOUS C.P.'S
Rec*: WO*: 10804
1S: NBT/ / / NST/MJF

CIRCUIT MODIFICATIONS ARE NOT TO BE MADE WITHOUT AUTHORITY FROM THE OFFICE OF SIGNAL DESIGN

Date:	09/27/12
Des:	NST
Chk:	NBT
AFE:	10804

UNION PACIFIC RAILROAD

BRIGHTON, ILLINOIS
BRIGHTON BUNKER HILL ROAD
SPRINGFIELD SUBDIVISION

Office of AVP Engineering - Signal — Omaha, Nebraska

Sh.:	21
DOT	294417H
MP:	244.76
ID:	CSL24476.21X

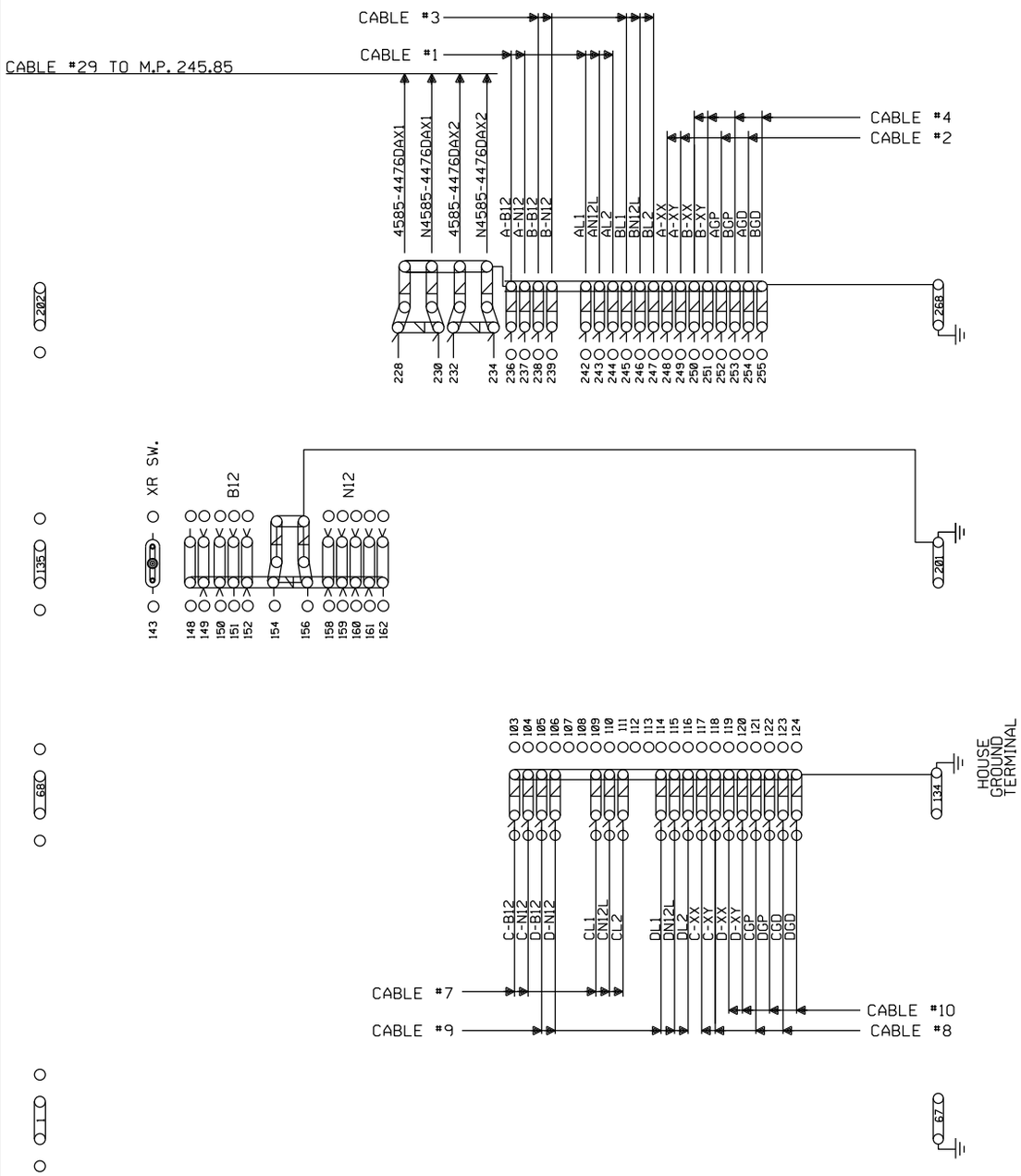

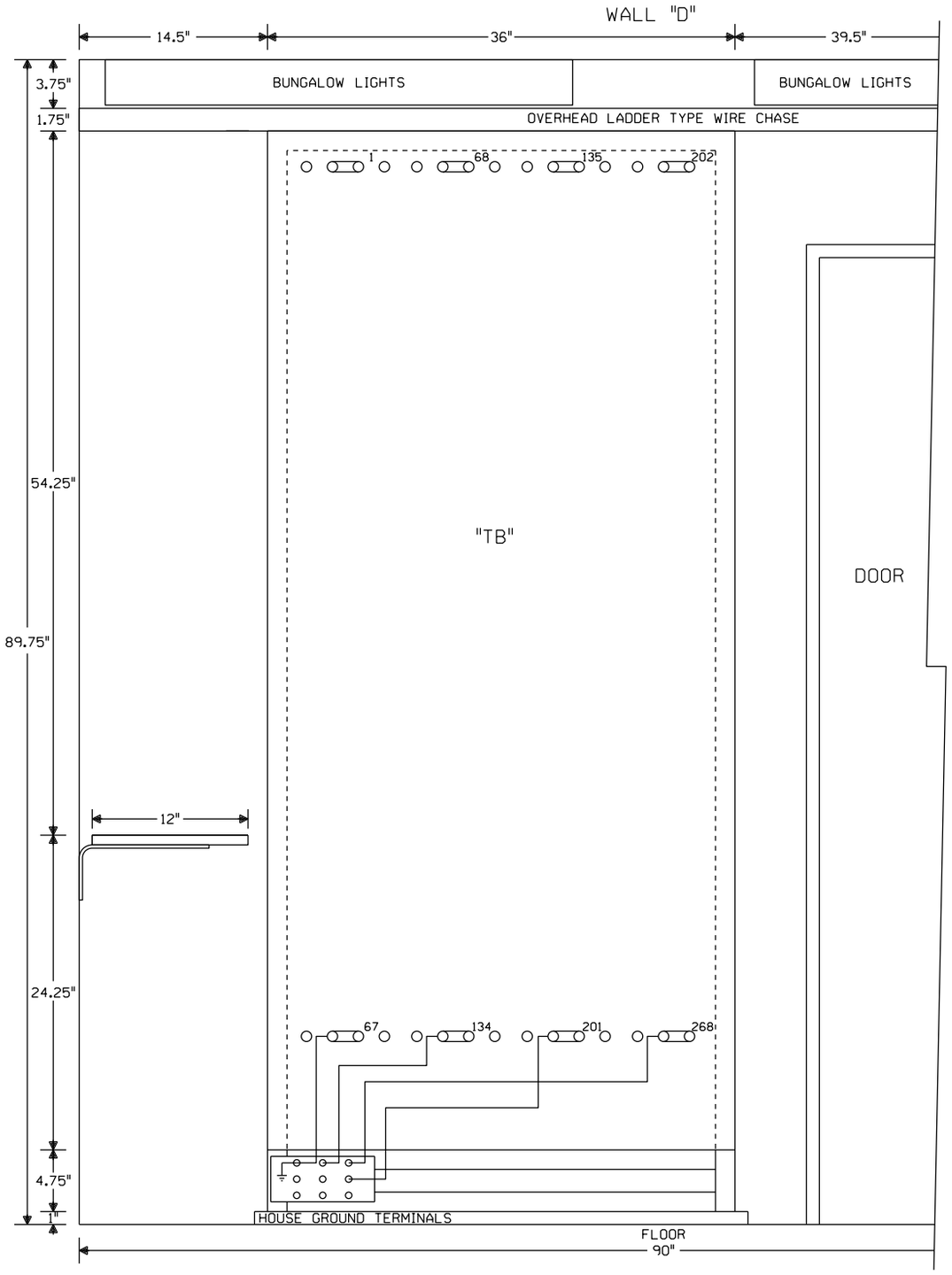

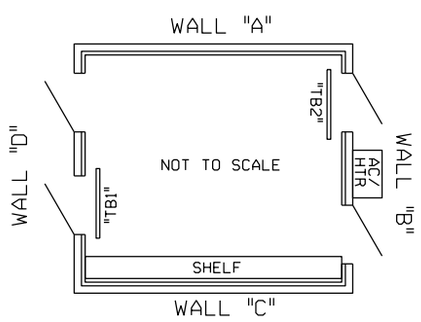

NOTE: ALL DIMENSIONS SHOWN ARE APPROXIMATE.

0 1 2 3 4 FEET

SCALE: 1.5 INCHES = 1 FOOT

NEW SHEET

Designed: 09/27/12
TIER IS PHASE 1 M.P. 239.70 TO M.P. 255.35 TO UPGRADE XING TO 4 QUAD WITH EGMS, VARIOUS C.P.'S
Rec*: WO*: 10804
IS: NBT/
/ /NST/MJF

CIRCUIT MODIFICATIONS ARE NOT TO BE MADE WITHOUT AUTHORITY FROM THE OFFICE OF SIGNAL DESIGN

Date: 09/27/12
Des: NST
Chk: NBT
AFE: 10804

UNION PACIFIC RAILROAD
BRIGHTON, ILLINOIS
BRIGHTON BUNKER HILL ROAD
SPRINGFIELD SUBDIVISION
Office of AVP Engineering - Signal Omaha, Nebraska

Sh.: 22
DOT 294417H
MP: 244.76
ID: CSL24476.22X

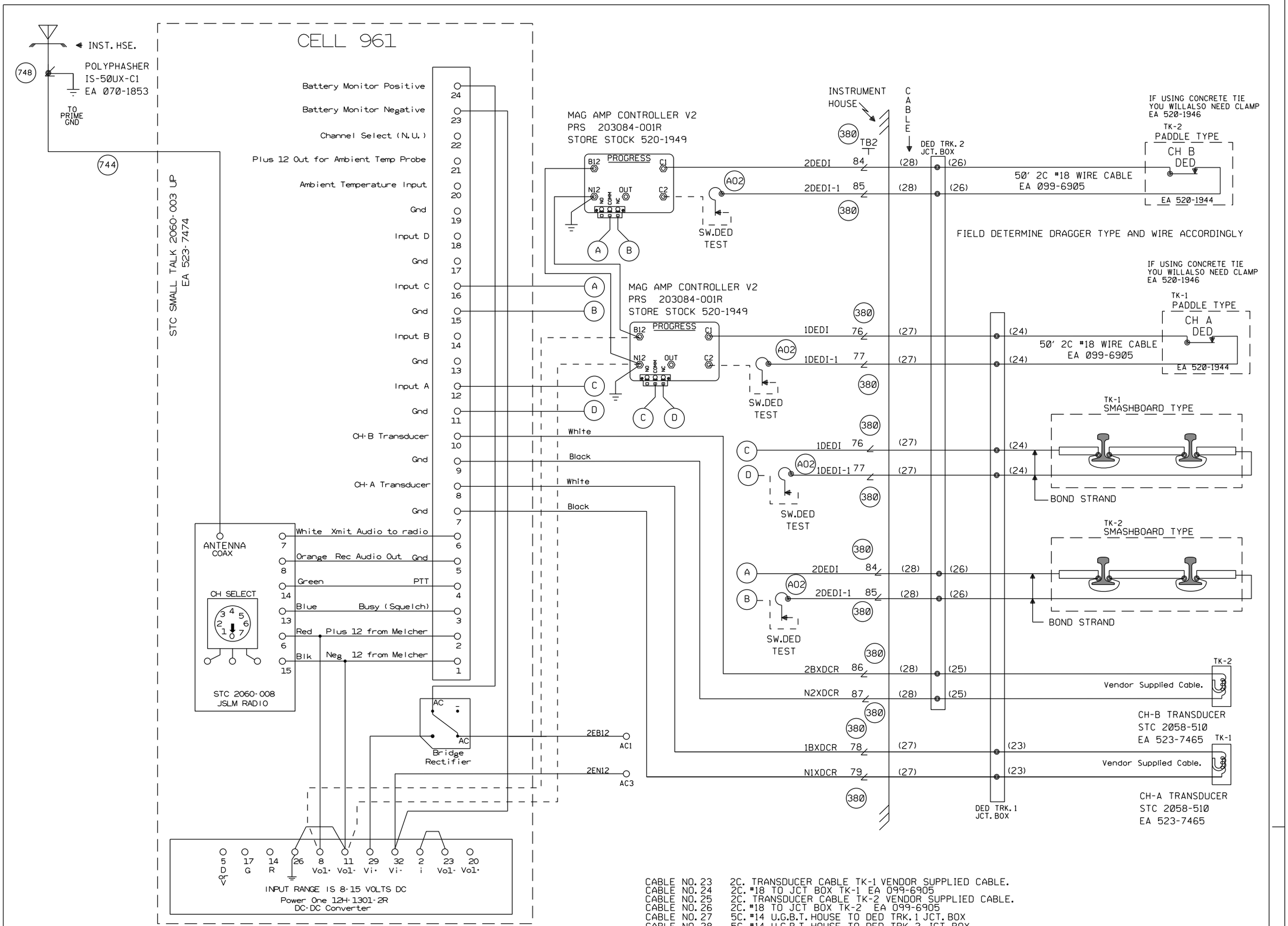

CABLE NO. 23 2C. TRANSDUCER CABLE TK-1 VENDOR SUPPLIED CABLE.
CABLE NO. 24 2C. #18 TO JCT BOX TK-1 EA 099-6905
CABLE NO. 25 2C. TRANSDUCER CABLE TK-2 VENDOR SUPPLIED CABLE.
CABLE NO. 26 2C. #18 TO JCT BOX TK-2 EA 099-6905
CABLE NO. 27 5C. #14 U.G.B.T. HOUSE TO DED TRK. 1 JCT. BOX
CABLE NO. 28 5C. #14 U.G.B.T. HOUSE TO DED TRK. 2 JCT. BOX

NEW SHEET

Designed: 09/27/12
TIER IS PHASE 1
M.P. 239.70 TO M.P. 255.35 TO UPGRADE XING TO 4 QUAD WITH EGMS, VARIOUS C.P.'S
Rec#: WO#: 10804
IS: NBT / / NST/MJF

MODIFICATION LEVEL	
O.A. LAST LEVEL CHECKED	DU
LAST LEVEL MOD THIS TYPICAL	DU
LAST LEVEL BY DESIGNER	DU
CHANGED FROM TYPICAL?	Y

REV 01/28/14 2TMLHBINTC.8PD

CIRCUIT MODIFICATIONS ARE NOT TO BE MADE WITHOUT AUTHORITY FROM THE OFFICE OF SIGNAL DESIGN

Date: 09/27/12
Des: NST
Chk: NBT
AFE: 10804

UNION PACIFIC RAILROAD
BRIGHTON, ILLINOIS
BRIGHTON BUNKER HILL ROAD
SPRINGFIELD SUBDIVISION
Office of AVP Engineering - Signal Omaha, Nebraska

Sh.: 23
DOT 294417H
MP: 244.76
ID: CSL24476.23S

Minimum Program Steps Report

Location and SIN

DOT Number: 294417H
Milepost Number: 244.76
Site Name: BRIGHTON, IL

SIN: 762010010016 *

* Parameter is part of office check number calculation.

MCF and Template Selection

MCF Name: GCP-T6X-02-6.mcf
MCF Revision: 26
MCFCRC: 494D2656

Template = 1D:3 Uni pairs (OCCN) *

* Parameter is part of office check number calculation.

Minimum Program Steps

MS4000 configuration
Track 1 : GCP Frequency = 86 Hz (OCCN,TCN) (Hidden) *
Track 1 : Prime UAX = IP (OCCN) (Hidden) *
Track 1 : Prime UAX Pickup = 15 sec (OCCN) (Hidden) *
Track 1 : Isl Frequency = 5.9 kHz (OCCN) (Hidden) *
Track 1 : Pickup Delay (2s +) = 2 sec (OCCN) (Hidden) *
IN 1.1 = T1 Prime UAX (OCCN) (Hidden) *
IN 1.2 = Out Of Service IP 1 (OCCN) (Hidden) *

MS4000 Predictor
Track 1 : Prime Warning Time = 40 sec (OCCN) (Hidden) *

BASIC: module configuration
Track 3/PSO 2 Slot = Track (OCCN) *
Track 4/PSO 3 Slot = Track (OCCN) *
Track 5/RIO 2 Slot = RIO (OCCN) *

GCP: track 1
Track 1 : GCP Frequency = 86 Hz (OCCN,TCN) *
Track 1 : Approach Distance = 5099 ft (OCCN,TCN) *
Track 1 : Island Distance = 151 ft (Set in Field,TCN)

GCP: track 1 prime
Track 1 : Prime Warning Time = 40 sec (OCCN) *
Track 1 : Prime UAX = IP (OCCN) *
Track 1 : Prime UAX Pickup = 15 sec (OCCN) *

GCP: track 2

Track 2 : GCP Frequency = 86 Hz (OCCN,TCN) *
Track 2 : Approach Distance = 5216 ft (OCCN,TCN) *

GCP: track 2 prime
Track 2 : Prime Warning Time = 40 sec (OCCN) *

GCP: track 3
Track 3 : GCP Frequency = 86 Hz (OCCN,TCN) *
Track 3 : Approach Distance = 5099 ft (OCCN,TCN) *
Track 3 : Island Distance = 151 ft (Set in Field,TCN)

GCP: track 3 prime
Track 3 : Prime Warning Time = 40 sec (OCCN) *
Track 3 : Prime UAX = IP (OCCN) *
Track 3 : Prime UAX Pickup = 15 sec (OCCN) *

GCP: track 4
Track 4 : GCP Frequency = 86 Hz (OCCN,TCN) *
Track 4 : Approach Distance = 5216 ft (OCCN,TCN) *

GCP: track 4 prime
Track 4 : Prime Warning Time = 40 sec (OCCN) *

ISLAND: track 1
Track 1 : Isl Frequency = 5.9 kHz (OCCN) *
Track 1 : Pickup Delay (2s +) = 2 sec (OCCN) *

ISLAND: track 3
Track 3 : Isl Frequency = 4.9 kHz (OCCN) *
Track 3 : Pickup Delay (2s +) = 2 sec (OCCN) *

AND: track Anding
AND 2 Used = Yes (OCCN) *
AND 3 Used = Yes (OCCN) *

AND: AND 1 XR
AND 1 Enable Used = Yes (OCCN) *

AND: AND 2
AND 2 Track 1 = Prime (OCCN) *
AND 2 Track 2 = Prime (OCCN) *

AND: AND 3
AND 3 Track 3 = Prime (OCCN) *
AND 3 Track 4 = Prime (OCCN) *

ADVANCED: out of service
OOS Control = OOS IPs (OCCN) *

ADVANCED: out of service 2
T2 OOS Control = OOS Input 1 (OCCN) *
T3 OOS Control = OOS Input 2 (OCCN) *
T4 OOS Control = OOS Input 2 (OCCN) *

SSCC
Bell On Gate Rising = Yes (OCCN) *

SSCC: 2
SSCC-2 Number of GPs = 2 (OCCN) *
SSCC-2 Number of GDs = 2 (OCCN) *

OUTPUT: assignment page 1
OUT 1.1 = AND 1 XR (OCCN) *
OUT 1.2 = T1 Island (OCCN) *
OUT 2.2 = T3 Island (OCCN) *

OUTPUT: assignment page 2
OUT 5.1 = AND 2 (OCCN) *
OUT 5.2 = AND 3 (OCCN) *

INPUT: assignment page 1
IN 1.1 = T1 Prime UAX (OCCN) *
IN 1.2 = Out Of Service IP 1 (OCCN) *
IN 2.1 = T3 Prime UAX (OCCN) *
IN 2.2 = Out Of Service IP 2 (OCCN) *

INPUT: assignment page 2
IN 5.1 = AND 1 XR Enable (OCCN) *
IN 5.2 = GP 1.1 (OCCN) *

IO: assignment SSCC
IN 7.1 = AND 1 XR Enable (OCCN) *
IN 7.2 = GD 1.1 (OCCN) *
IN 7.4 = GD 1.2 (OCCN) *
IN 8.2 = GD 2.1 (OCCN) *
IN 8.3 = GP 2.1 (OCCN) *
IN 8.4 = GD 2.2 (OCCN) *
IN 8.5 = GP 2.2 (OCCN) *

SEAR: inputs
SP 3.1 = General 3 (OCCN) *
SP 4.1 = General 4 (OCCN) *

SEAR: slot 1-4 inputs
IN 4.1 = Vehicle Det Hlth (OCCN) *
IN 4.2 = 3 Vehicle Detect (OCCN) *

SEAR: inputs slot 5
IN 5.3 = General 1 (OCCN) *
IN 5.4 = General 2 (OCCN) *

Express: MS4000 configuration
Track 1 : GCP Frequency = 86 Hz (OCCN,TCN) (Hidden) *
Track 1 : Prime UAX = IP (OCCN) (Hidden) *
Track 1 : Prime UAX Pickup = 15 sec (OCCN) (Hidden) *
Track 1 : Pickup Delay (2s +) = 2 sec (OCCN) (Hidden) *
IN 1.1 = T1 Prime UAX (OCCN) (Hidden) *
IN 1.2 = Out Of Service IP 1 (OCCN) (Hidden) *

Express: MS4000 Predictor
Track 1 : Prime Warning Time = 40 sec (OCCN) (Hidden) *

* Parameter is part of office check number calculation.

Check Numbers

Office Check Number: 1E029643
Config. Check Number: 25153466
(Based on MCF Revision 26)

Parameters not part of office check number calculation:

Track 1 : Island Distance = 151 ft (Set in Field)
Track 3 : Island Distance = 151 ft (Set in Field)

Comments

<none>

Configuration Package File

Filename: CSL24476_294417H.pac
Path: H:\UP\Springfield Sub Tier 1 Ph. 1 11-419-1\PAC Files\MP 244.76\
Date/Time: 5/17/2016 15:31:53
DT Version: 5.7.3