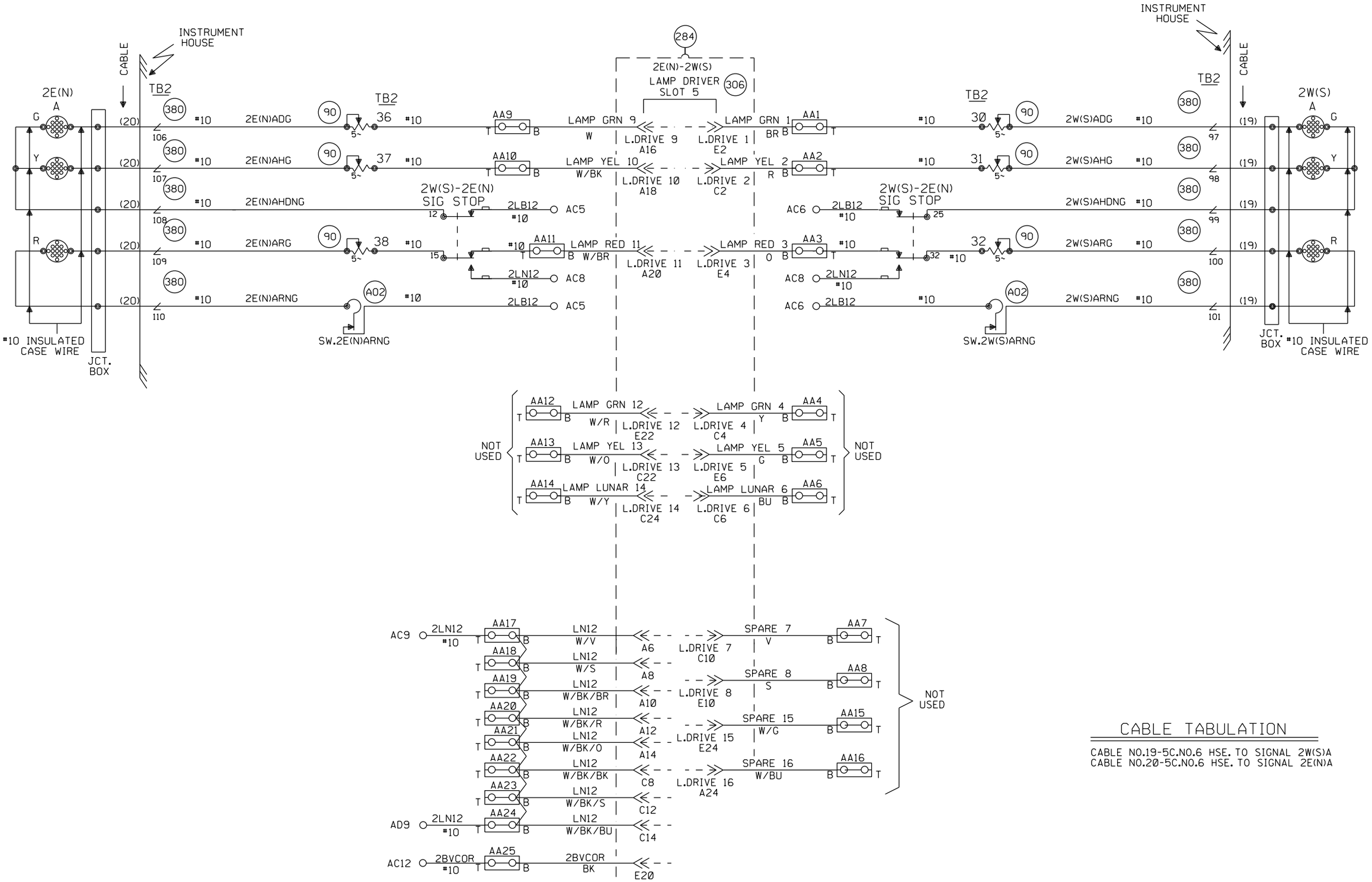

CABLE TABULATION

CABLE NO.19-5C.NO.6 HSE. TO SIGNAL 2W(S)A
CABLE NO.20-5C.NO.6 HSE. TO SIGNAL 2E(N)A

NEW SHEET

Designed: 03/10/16
TIER 1S PHASE 1 M.P. 239.70 TO M.P. 255.35 TO UPGRADE XING TO 4 QUAD WITH EGMS, VARIOUS C.P.'S
Rec*: WO*: 10804
IS: NBT / / / NST/MJF

MODIFICATION LEVEL	
O.A. LAST LEVEL CHECKED	DU
LAST LEVEL MOD THIS TYPICAL	DU
LAST LEVEL BY DESIGNER	DU
CHANGED FROM TYPICAL?	Y

Rev 8/20/10 1TMLHBINTUGS.3

CIRCUIT MODIFICATIONS ARE NOT TO BE MADE WITHOUT AUTHORITY FROM THE OFFICE OF SIGNAL DESIGN

Date: 03/10/16
Des: NST
Chk: NBT
AFE: 10804

UNION PACIFIC RAILROAD
BRIGHTON, ILLINOIS
DAVID ACRES ROAD
SPRINGFIELD SUBDIVISION
Office of AVP Engineering - Signal Omaha, Nebraska

Sh.: 14
DOT 294423L
MP: 248.55
ID: CSL24855.14S

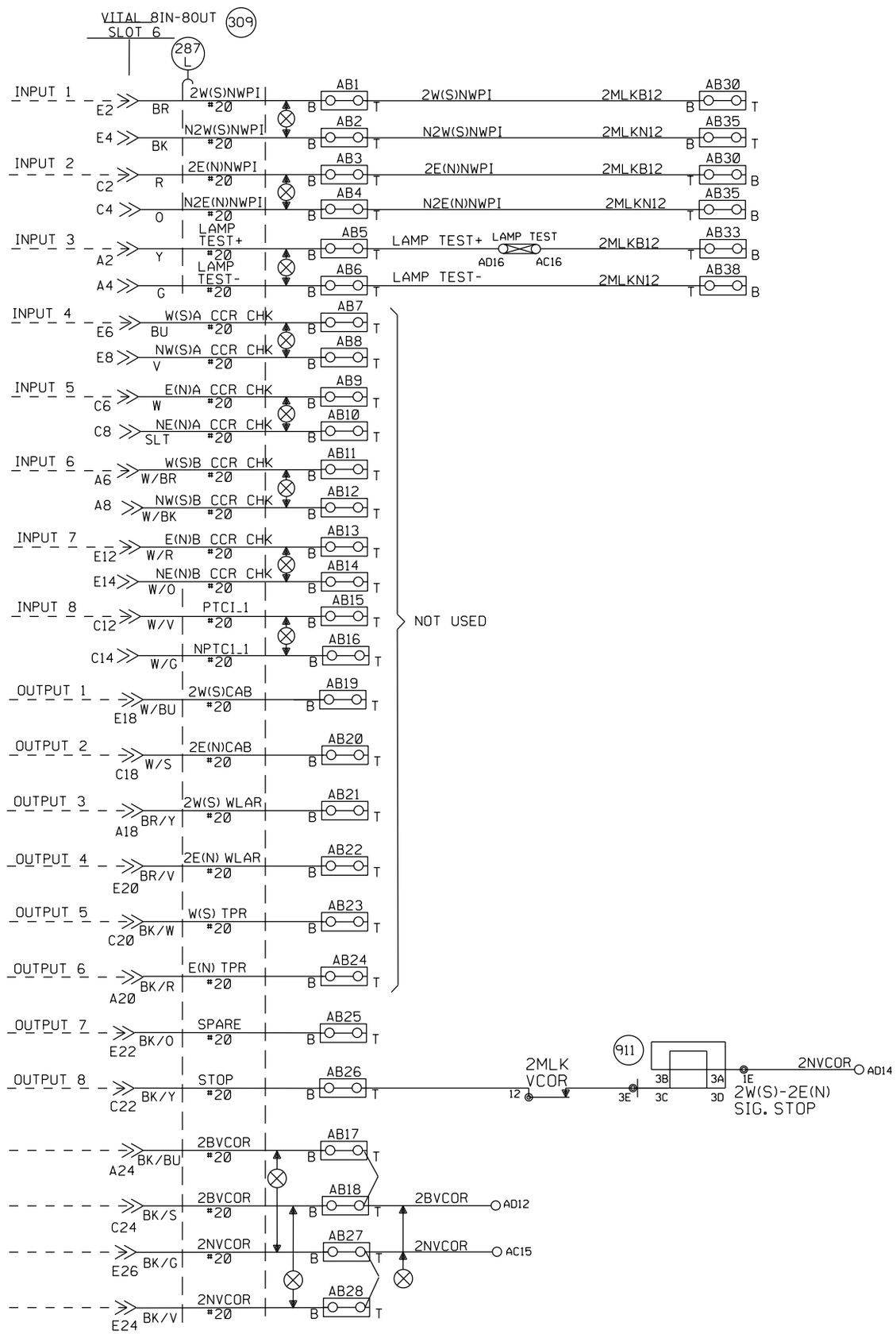

2W(S)-2E(N)T

NEW SHEET

Designed: 03/10/16

TIER IS PHASE 1 M.P. 239.70 TO M.P. 255.35 TO UPGRADE XING TO 4 QUAD WITH EGMS, VARIOUS C.P.'S

Rec#: WO#: 10804

IS: NBT / / /NST/MJF

MODIFICATION LEVEL	
O. A. LAST LEVEL CHECKED	DU
LAST LEVEL MOD THIS TYPICAL	DU
LAST LEVEL BY DESIGNER	DU
CHANGED FROM TYPICAL?	Y

REV 8/20/10 1TMLHBINTU.3A

CIRCUIT MODIFICATIONS ARE NOT TO BE MADE WITHOUT AUTHORITY FROM THE OFFICE OF SIGNAL DESIGN

Date: 03/10/16
Des: NST
Chk: NBT
AFE: 10804

UNION PACIFIC RAILROAD

BRIGHTON, ILLINOIS
DAVID ACRES ROAD
SPRINGFIELD SUBDIVISION

Office of AVP Engineering - Signal Omaha, Nebraska

Sh.: 14A
DOT 294423L
MP: 248.55
ID: CSL24855.14AS

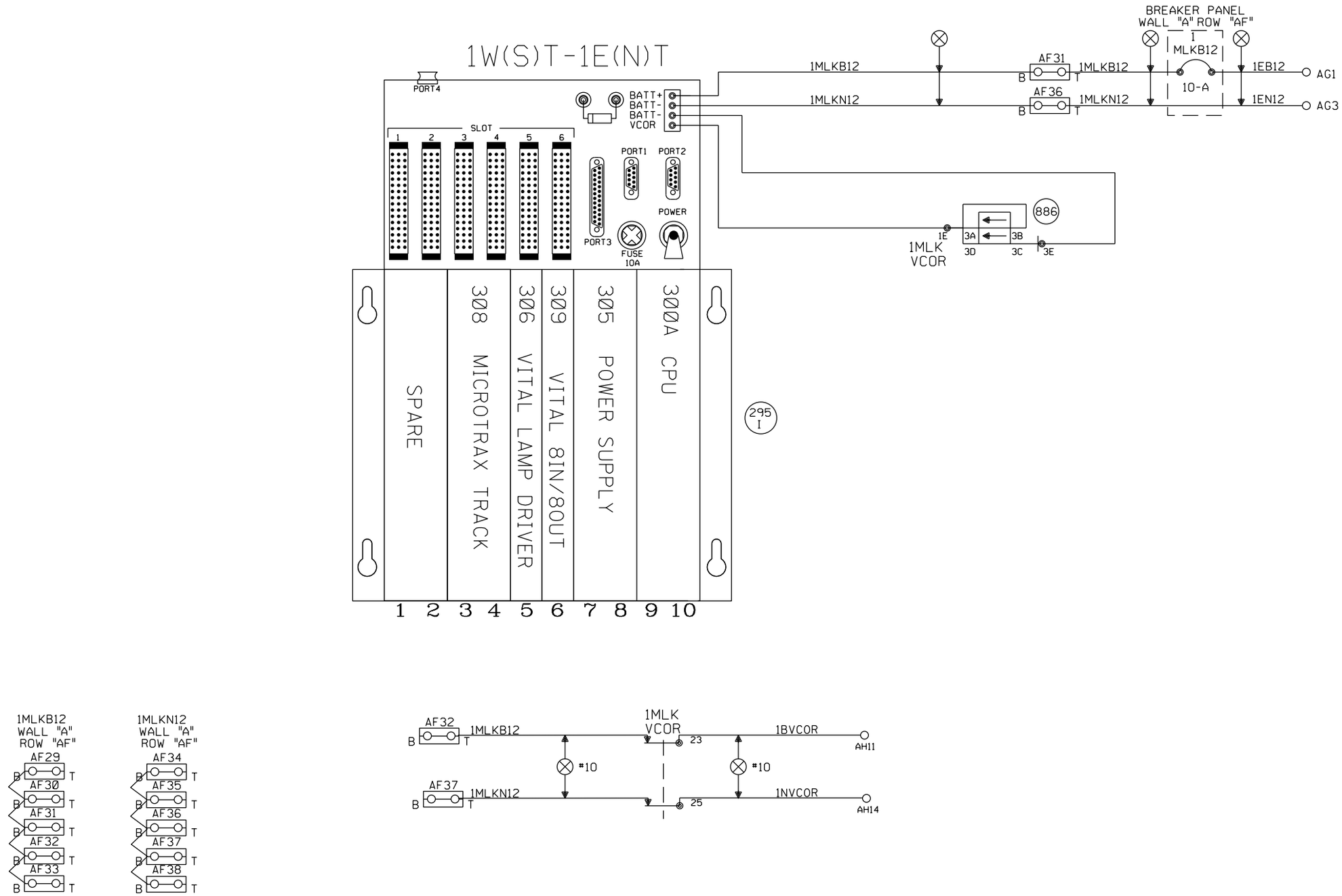

NEW SHEET

					Designed: 03/10/16 TIER IS PHASE 1 M.P. 239.70 TO M.P. 255.35 TO UPGRADE XING TO 4 QUAD WITH EGMS, VARIOUS C.P.'S Rec#: WO#: 10804 IS: NBT / / / NST / MJF	MODIFICATION LEVEL		CIRCUIT MODIFICATIONS ARE NOT TO BE MADE WITHOUT AUTHORITY FROM THE OFFICE OF SIGNAL DESIGN	Date: 03/10/16 Des: NST Chk: NBT AFE: 10804	UNION PACIFIC RAILROAD BRIGHTON, ILLINOIS DAVID ACRES ROAD SPRINGFIELD SUBDIVISION Office of AVP Engineering - Signal Omaha, Nebraska	Sh.: 15 DOT 294423L MP: 248.55 ID: CSL24855.15S
						Q. A. LAST LEVEL CHECKED	DU				
						LAST LEVEL MOD THIS TYPICAL	DU				
						LAST LEVEL BY DESIGNER	DU				
						CHANGED FROM TYPICAL? REV 8/20/10 1TMLHBINTU.4	Y				

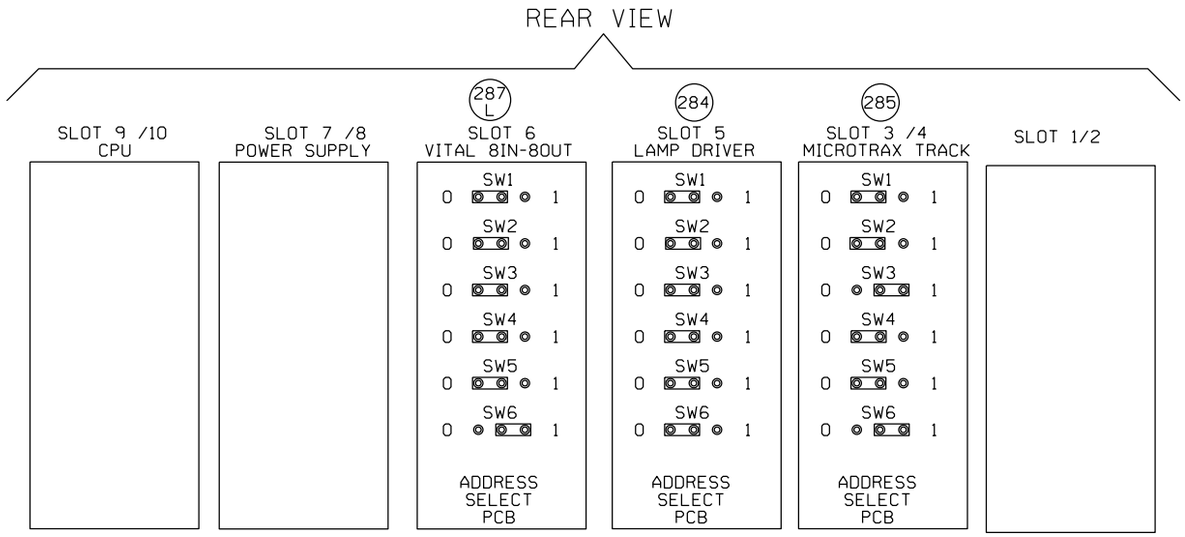

NOTE: FOR PTC COMPATIBLE CPU JUMPER SETTINGS REFER TO
ANSALDO MANUAL 1D1.0028 PAGE 1-26 1-27 1-28 REV.1 DATE 8/2009

IF BOX CHECKED SET
APPROPRIATE PROG. ID

ML8UCCB REV.N

15 SEC SLOW PICK ET TO PREVENT JOINT HOP		USE WHEN INTERFACING MICRO-ECODE TO GETS ECODE
15 SEC SLOW PICK WT TO PREVENT JOINT HOP		USE WHEN INTERFACING MICRO-ECODE TO GETS ECODE
DISABLE DBFY EAST ?	X	(SET PROG ID 1)
DISABLE DBFY WEST ?	X	(SET PROG ID 2)
PROGRAM ID 1 (BINARY 1)	X	
PROGRAM ID 2 (BINARY 2)	X	
PROGRAM ID 3 (BINARY 4)		(MUST BE CLEAR)
PROGRAM ID 4 (BINARY 8)		(MUST BE CLEAR)
PROGRAM ID 5 (BINARY 16)		(MUST BE CLEAR)
PROGRAM ID 6 (BINARY 32)		(MUST BE CLEAR)
PROGRAM ID 7 (BINARY 64)		(SET TO DISABLE VIO8 CAB)
PROGRAM ID 8 (BINARY 128)	X	(MUST BE SET)
PROGRAM ID 9 (BINARY 256)		(SET TO DISABLE INCAND. SIG BOARD)
PROGRAM ID 10 (BINARY 512)	X	(SET TO DISABLE LED SIG BOARD)
PROGRAM ID 11 (BINARY 1024)		
PROGRAM ID 12 (BINARY 2048)		
PROGRAM ID 13 (BINARY 4096)		
PROGRAM ID 14 (BINARY 8192)		
PROGRAM ID 15 (BINARY 16384)		
PROGRAM ID 16 (BINARY 32768)		
WEST TK UP SEND C5 EAST	X	
REC C5 W TK SEND C5 EAST		
EAST TK UP SEND C5 WEST	X	
REC C5 E TK SEND C5 WEST		
SET IF W(S) "B" FLASHING RED		(SET PROG ID 11)
SET IF W(S) "B" LUNAR		(SET PROG ID 12)
SET IF W(S) "B" YELLOW		(SET PROG ID 13)
SET IF E(N) "B" FLASHING RED		(SET PROG ID 14)
SET IF E(N) "B" LUNAR		(SET PROG ID 15)
SET IF E(N) "B" YELLOW		(SET PROG ID 16)
E(N) C5 APPLIT	X	(ENABLE APPLIT W(S) SIG W/LOSS OF C5)
W(S) C5 APPLIT	X	(ENABLE APPLIT E(N) SIG W/LOSS OF C5)

1W(S)-1E(N)T

NEW SHEET

Designed: 03/10/16

TIER IS PHASE 1
M.P. 239.70 TO M.P.
255.35 TO UPGRADE
XING TO 4 QUAD WITH
ECMS, VARIOUS C.P.'S
Rec*: WO#: 10804
IS: NBT /
/ /NST/MJF

MODIFICATION LEVEL	
Q. A. LAST LEVEL CHECKED	DU
LAST LEVEL MOD THIS TYPICAL	DU
LAST LEVEL BY DESIGNER	DU
CHANGED FROM TYPICAL?	Y

REV 8/20/10 ITMLHBINTU.5

CIRCUIT MODIFICATIONS ARE NOT TO BE MADE WITHOUT AUTHORITY FROM THE OFFICE OF SIGNAL DESIGN

Date: 03/10/16
Des: NST
Chk: NBT
AFE: 10804

UNION PACIFIC RAILROAD
BRIGHTON, ILLINOIS
DAVID ACRES ROAD
SPRINGFIELD SUBDIVISION
Office of AVP Engineering - Signal Omaha, Nebraska

Sh.: 16
DOT 294423L
MP: 248.55
ID: CSL24855.16S

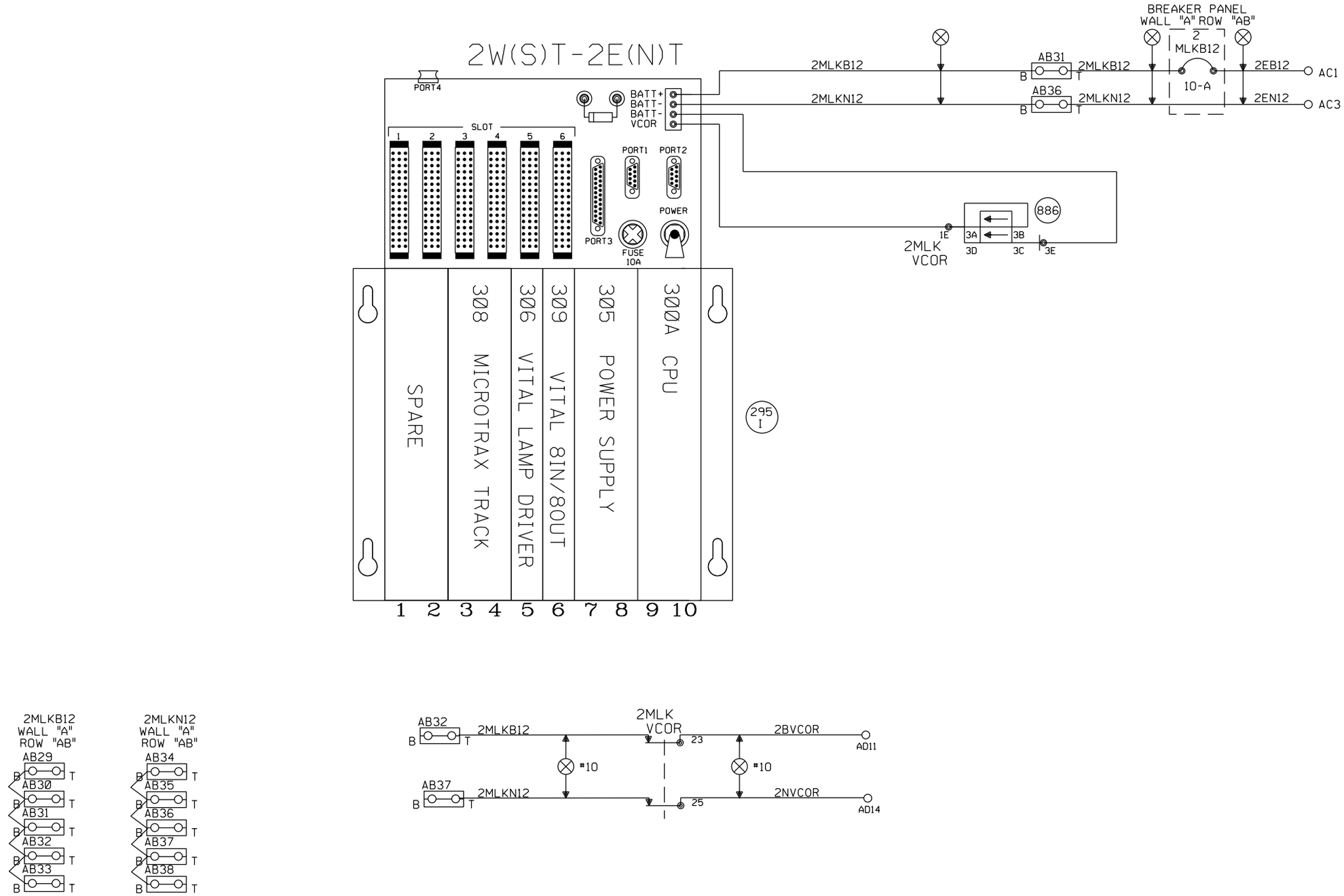

NEW SHEET

					Designed: 03/10/16 TIER IS PHASE 1 M.P. 239.70 TO M.P. 255.35 TO UPGRADE XING TO 4 QUAD WITH EGMS, VARIOUS C.P.'S Rec#: WO#: 10804 IS: NBT / / /NST/MJF	MODIFICATION LEVEL Q. A. LAST LEVEL CHECKED DU LAST LEVEL MOD THIS TYPICAL DU LAST LEVEL BY DESIGNER DU CHANGED FROM TYPICAL? Y REV 8/20/10 1TMLHBINTU.4	CIRCUIT MODIFICATIONS ARE NOT TO BE MADE WITHOUT AUTHORITY FROM THE OFFICE OF SIGNAL DESIGN	Date: 03/10/16 Des: NST Chk: NBT AFE: 10804	UNION PACIFIC RAILROAD BRIGHTON, ILLINOIS DAVID ACRES ROAD SPRINGFIELD SUBDIVISION Office of AVP Engineering - Signal Omaha, Nebraska	Sh.: 17 DOT 294423L MP: 248.55 ID: CSL24855.17S

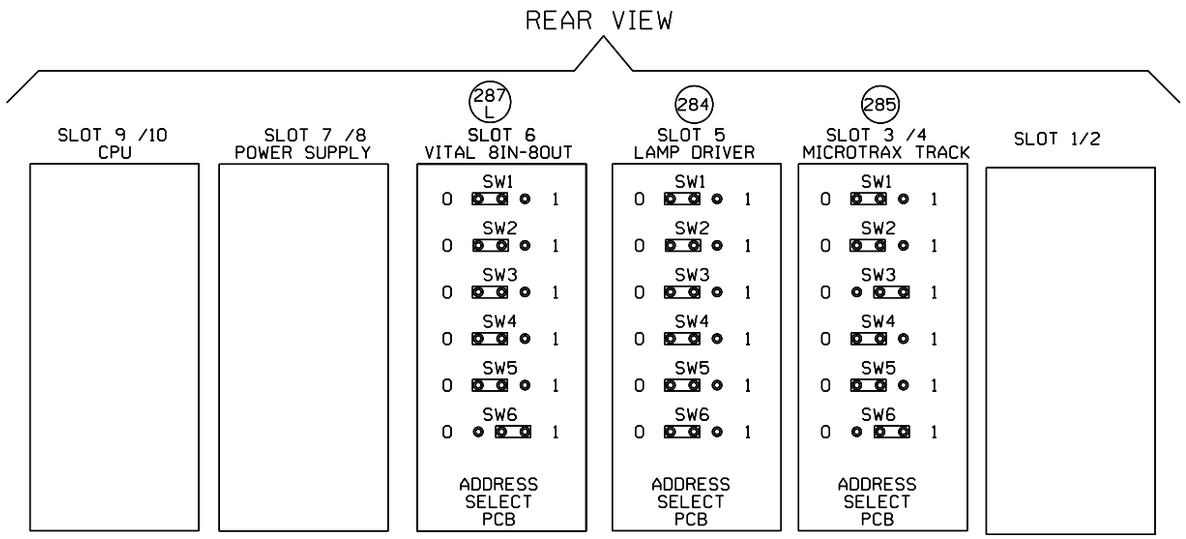

NOTE: FOR PTC COMPATIBLE CPU JUMPER SETTINGS REFER TO ANSALDO MANUAL 1D1.0028 PAGE 1-26 1-27 1-28 REV.1 DATE 8/2009

IF BOX CHECKED SET APPROPRIATE PROG. ID

ML8UCCB REV.N

15 SEC SLOW PICK ET TO PREVENT JOINT HOP		USE WHEN INTERFACING MICRO-ECODE TO GETS ECODE
15 SEC SLOW PICK WT TO PREVENT JOINT HOP		USE WHEN INTERFACING MICRO-ECODE TO GETS ECODE
DISABLE DBFY EAST ?	X	(SET PROG ID 1)
DISABLE DBFY WEST ?	X	(SET PROG ID 2)
PROGRAM ID 1 (BINARY 1)	X	
PROGRAM ID 2 (BINARY 2)	X	
PROGRAM ID 3 (BINARY 4)		(MUST BE CLEAR)
PROGRAM ID 4 (BINARY 8)		(MUST BE CLEAR)
PROGRAM ID 5 (BINARY 16)		(MUST BE CLEAR)
PROGRAM ID 6 (BINARY 32)		(MUST BE CLEAR)
PROGRAM ID 7 (BINARY 64)		(SET TO DISABLE VI08 CAB)
PROGRAM ID 8 (BINARY 128)	X	(MUST BE SET)
PROGRAM ID 9 (BINARY 256)		(SET TO DISABLE INCAND. SIG BOARD)
PROGRAM ID 10 (BINARY 512)	X	(SET TO DISABLE LED SIG BOARD)
PROGRAM ID 11 (BINARY 1024)		
PROGRAM ID 12 (BINARY 2048)		
PROGRAM ID 13 (BINARY 4096)		
PROGRAM ID 14 (BINARY 8192)		
PROGRAM ID 15 (BINARY 16384)		
PROGRAM ID 16 (BINARY 32768)		
WEST TK UP SEND C5 EAST	X	
REC C5 W TK SEND C5 EAST		
EAST TK UP SEND C5 WEST	X	
REC C5 E TK SEND C5 WEST		
SET IF W(S) "B" FLASHING RED		(SET PROG ID 11)
SET IF W(S) "B" LUNAR		(SET PROG ID 12)
SET IF W(S) "B" YELLOW		(SET PROG ID 13)
SET IF E(N) "B" FLASHING RED		(SET PROG ID 14)
SET IF E(N) "B" LUNAR		(SET PROG ID 15)
SET IF E(N) "B" YELLOW		(SET PROG ID 16)
E(N) C5 APPLIT	X	(ENABLE APPLIT W(S) SIG W/LOSS OF C5)
W(S) C5 APPLIT	X	(ENABLE APPLIT E(N) SIG W/LOSS OF C5)

2W(S)-2E(N)T

NEW SHEET

Designed: 03/10/16
TIER IS PHASE 1 M.P. 239.70 TO M.P. 255.35 TO UPGRADE XING TO 4 QUAD WITH ECMS, VARIOUS C.P.'S
Rec*: WO#: 10804
IS: NBT / / NST/MJF

MODIFICATION LEVEL	
O.A. LAST LEVEL CHECKED	DU
LAST LEVEL MOD THIS TYPICAL	DU
LAST LEVEL BY DESIGNER	DU
CHANGED FROM TYPICAL?	Y

REV 8/20/10 ITMLHBINTU.5

CIRCUIT MODIFICATIONS ARE NOT TO BE MADE WITHOUT AUTHORITY FROM THE OFFICE OF SIGNAL DESIGN

Date: 03/10/16
Des: NST
Chk: NBT
AFE: 10804

UNION PACIFIC RAILROAD
BRIGHTON, ILLINOIS
DAVID ACRES ROAD
SPRINGFIELD SUBDIVISION
Office of AVP Engineering - Signal Omaha, Nebraska

Sh.: 18
DOT 294423L
MP: 248.55
ID: CSL24855.18S

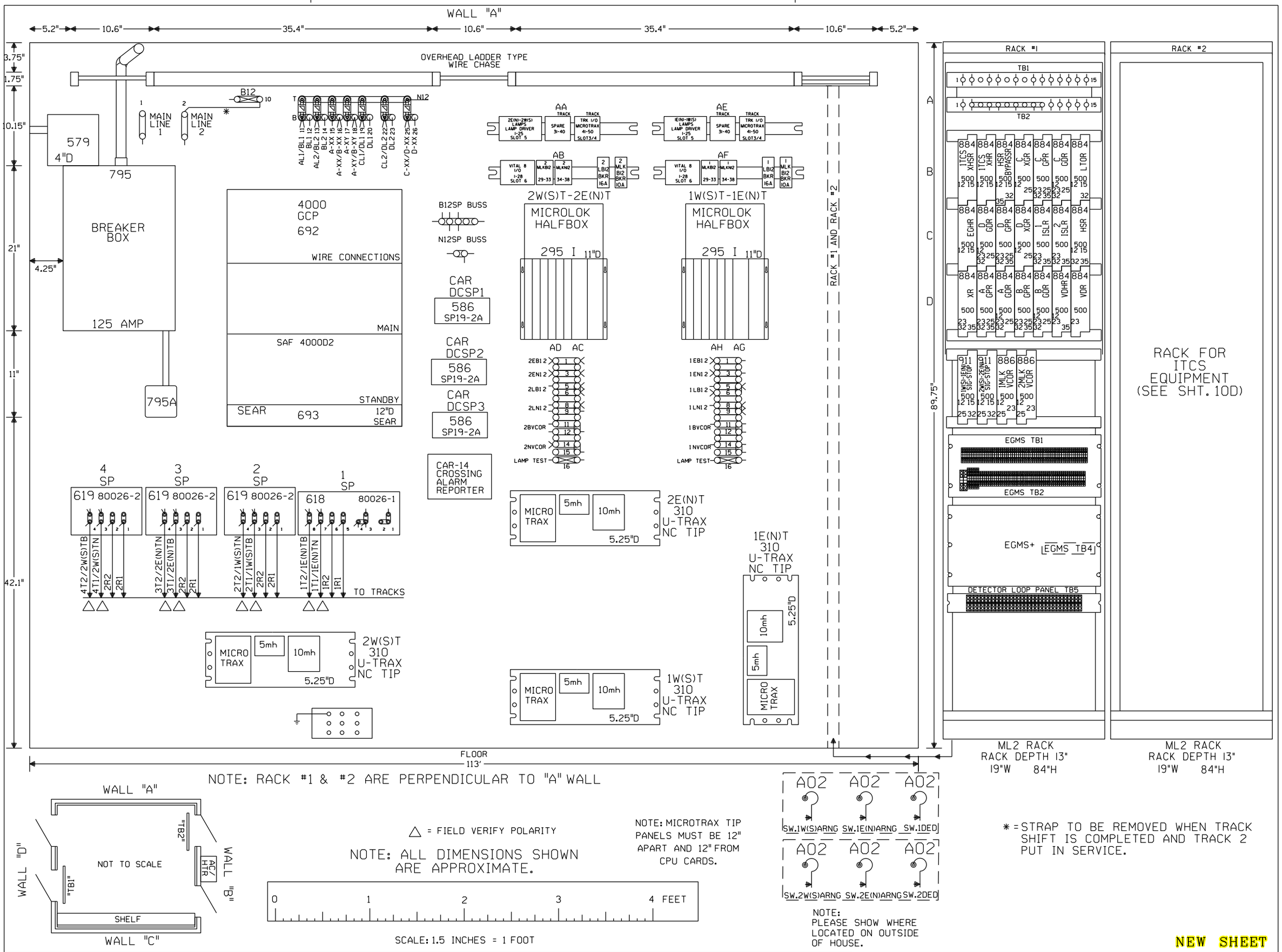

NEW SHEET

Designed: 03/10/16

TIER IS PHASE 1 M.P. 239.70 TO M.P. 255.35 TO UPGRADE XING TO 4 QUAD WITH EGMS, VARIOUS C.P.'S

Rec#: WO#: 10804
IS: NBT / / /NST/MJF

CIRCUIT MODIFICATIONS ARE NOT TO BE MADE WITHOUT AUTHORITY FROM THE OFFICE OF SIGNAL DESIGN

Date:	03/10/16
Des:	NST
Chk:	NBT
AFE:	10804

UNION PACIFIC RAILROAD

BRIGHTON, ILLINOIS
DAVID ACRES ROAD
SPRINGFIELD SUBDIVISION

Office of AVP Engineering - Signal Omaha, Nebraska

Sh.:	19
DOT	294423L
MP:	248.55
ID:	CSL24855.19X

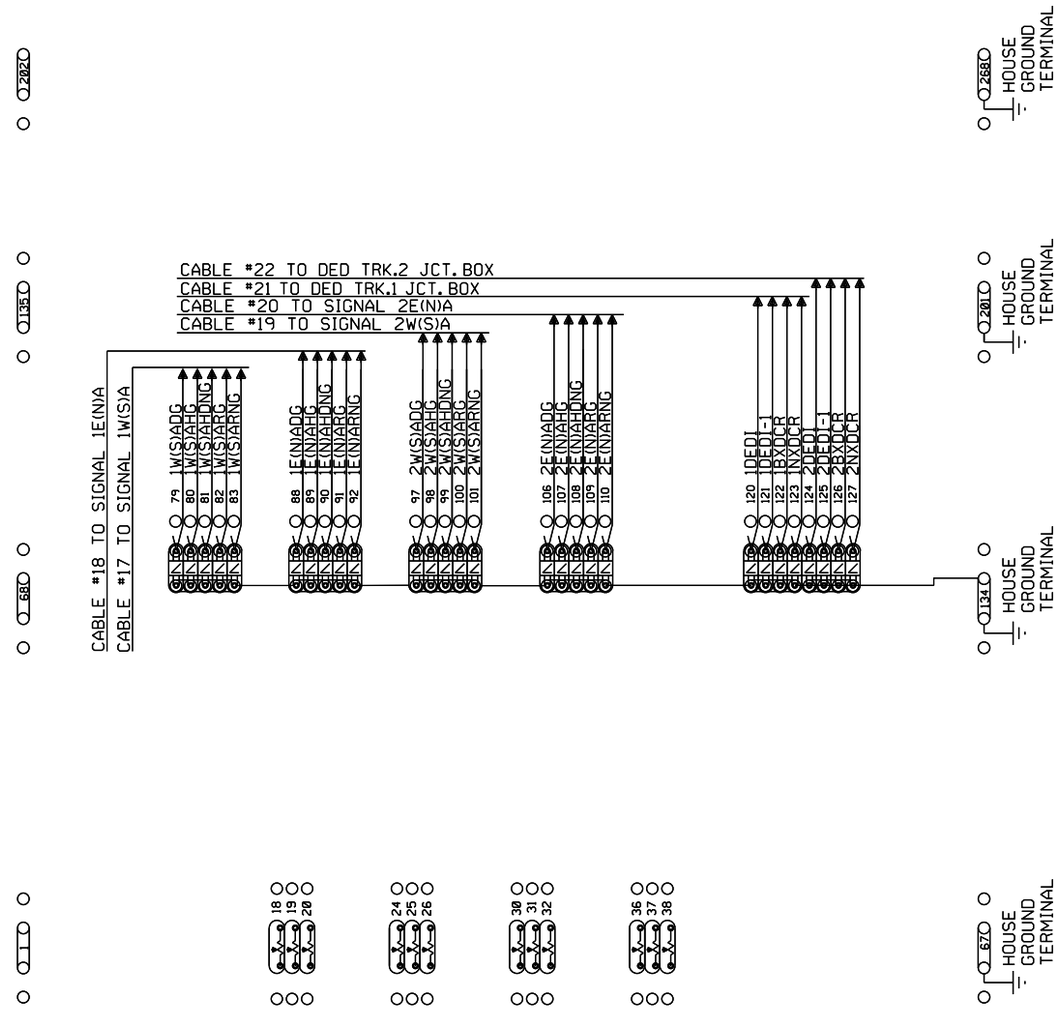

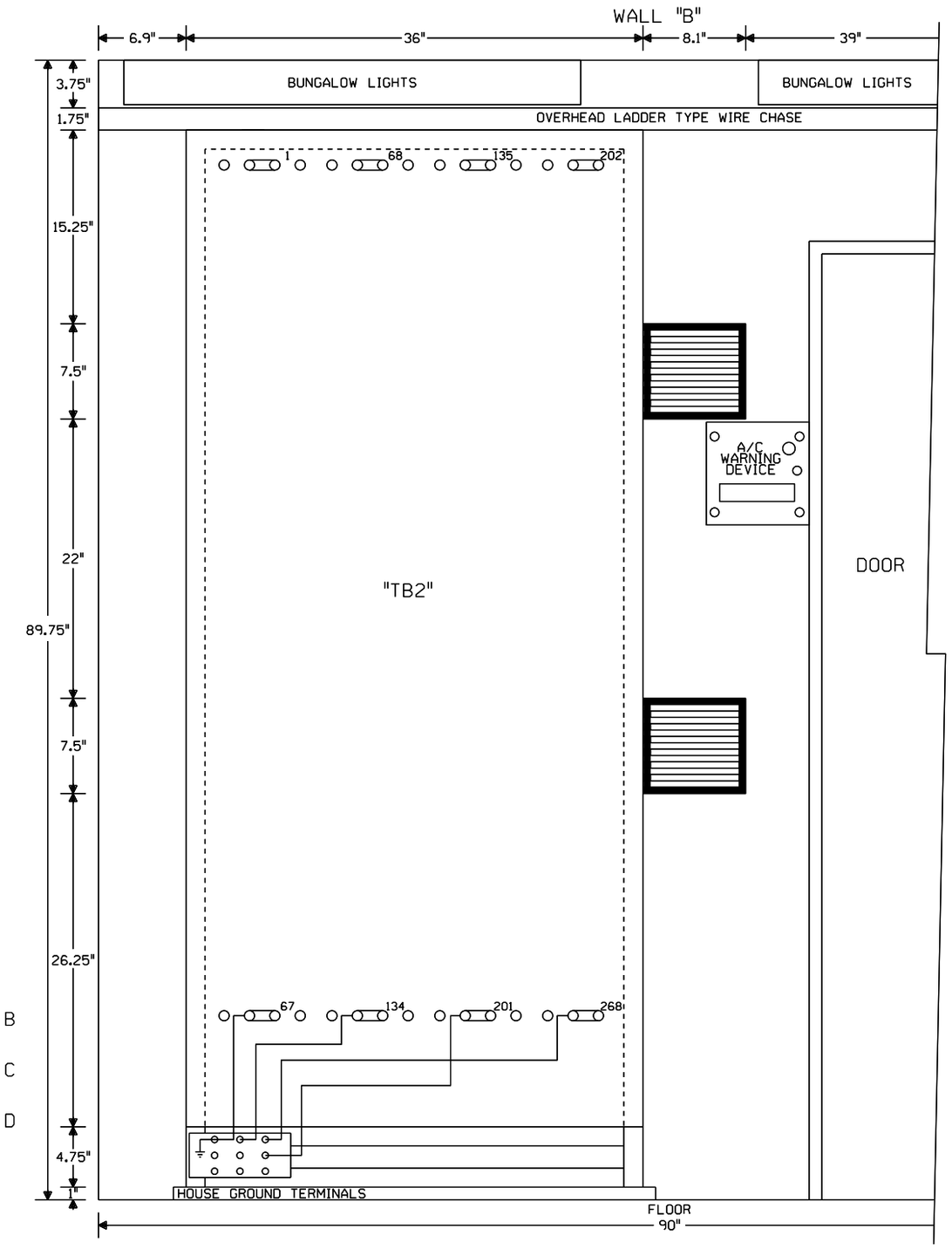

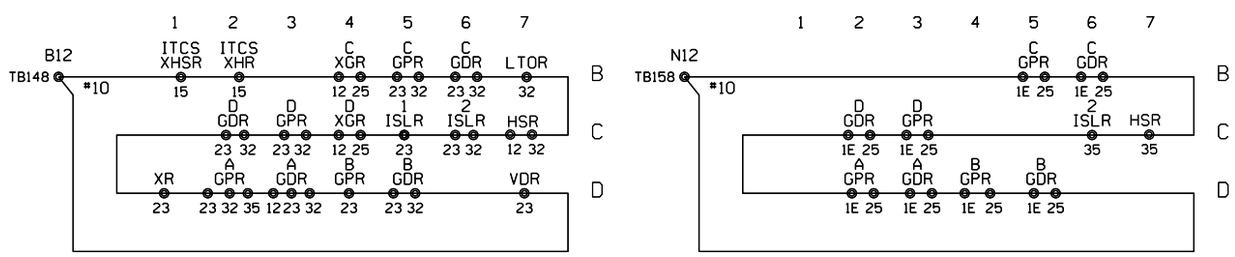

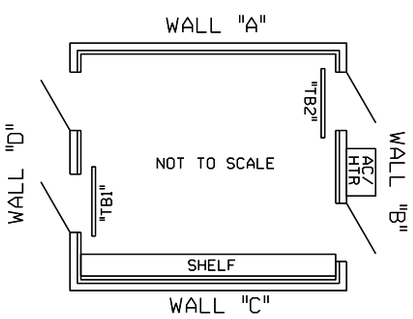

NOTE: ALL DIMENSIONS SHOWN ARE APPROXIMATE.

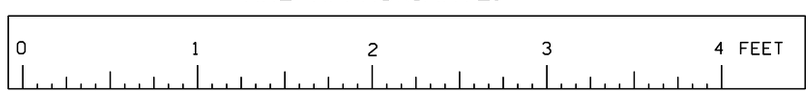

SCALE: 1.5 INCHES = 1 FOOT

NEW SHEET

Designed: 03/10/16
TIER 1S PHASE 1 M.P. 239.70 TO M.P. 255.35 TO UPGRADE XING TO 4 QUAD WITH EGMS, VARIOUS C.P.'S
Rec*: W0*: 10804
1S: NBT / / / NST / MJF

CIRCUIT MODIFICATIONS ARE NOT TO BE MADE WITHOUT AUTHORITY FROM THE OFFICE OF SIGNAL DESIGN

Date:	03/10/16
Des:	NST
Chk:	NBT
AFE:	10804

UNION PACIFIC RAILROAD

BRIGHTON, ILLINOIS
DAVID ACRES ROAD
SPRINGFIELD SUBDIVISION

Office of AVP Engineering - Signal — Omaha, Nebraska

Sh.:	20
DOT	294423L
MP:	248.55
ID:	CSL24855.20X

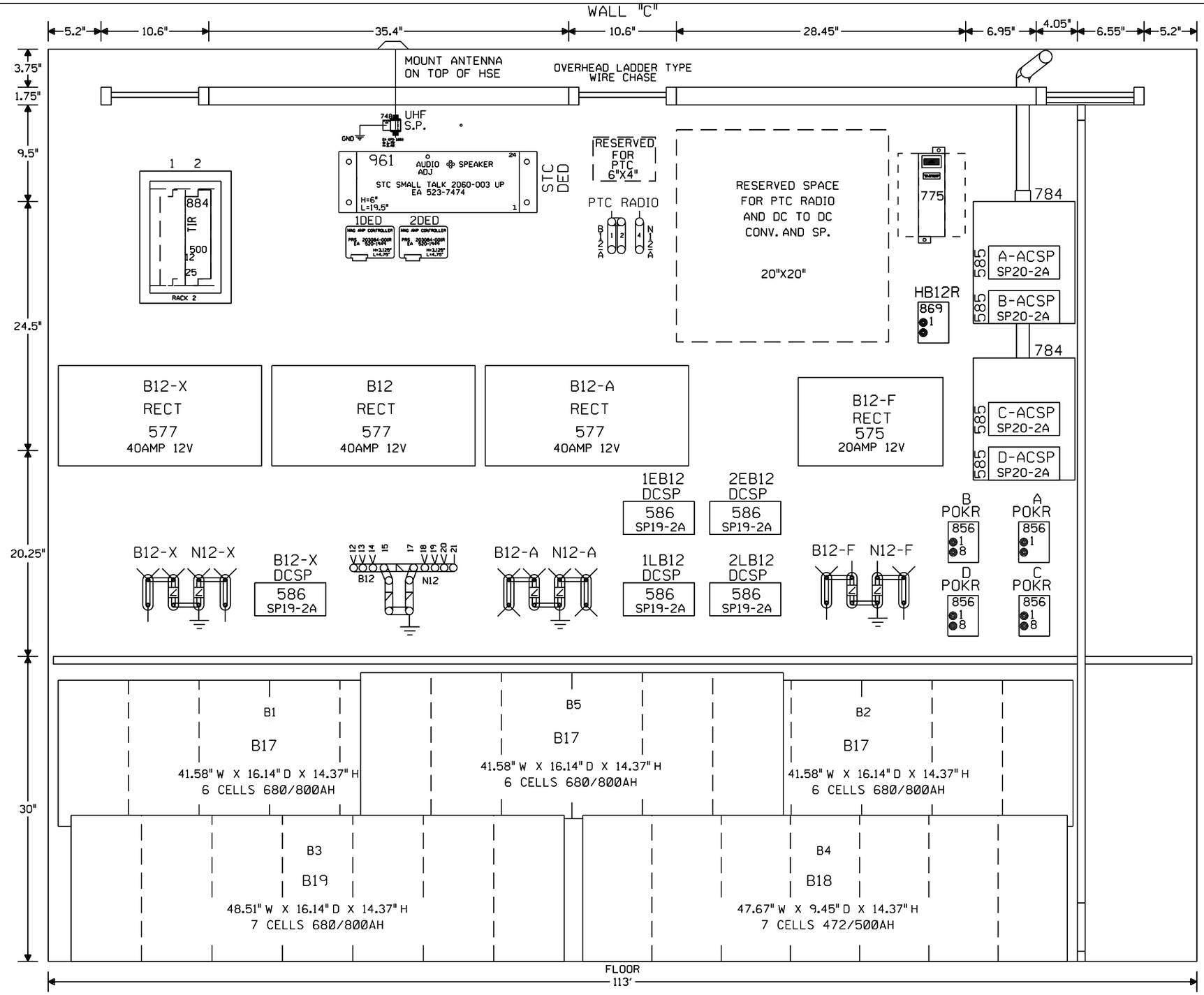

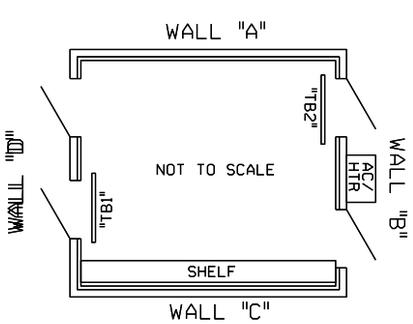

NOTE: ALL DIMENSIONS SHOWN ARE APPROXIMATE.

0 1 2 3 4 FEET

SCALE: 1.5 INCHES = 1 FOOT

NEW SHEET

Designed: 03/10/16
TIER IS PHASE 1 M.P. 239.70 TO M.P. 255.35 TO UPGRADE XING TO 4 QUAD WITH EGMS, VARIOUS C.P.'S
Rec#: WO#: 10804
IS: NBT / / /NST/MJF

CIRCUIT MODIFICATIONS ARE NOT TO BE MADE WITHOUT AUTHORITY FROM THE OFFICE OF SIGNAL DESIGN

Date:	03/10/16
Des:	NST
Chk:	NBT
AFE:	10804

UNION PACIFIC RAILROAD

BRIGHTON, ILLINOIS
DAVID ACRES ROAD
SPRINGFIELD SUBDIVISION

Office of AVP Engineering - Signal Omaha, Nebraska

Sh.:	21
DOT	294423L
MP:	248.55
ID:	CSL24855.21X

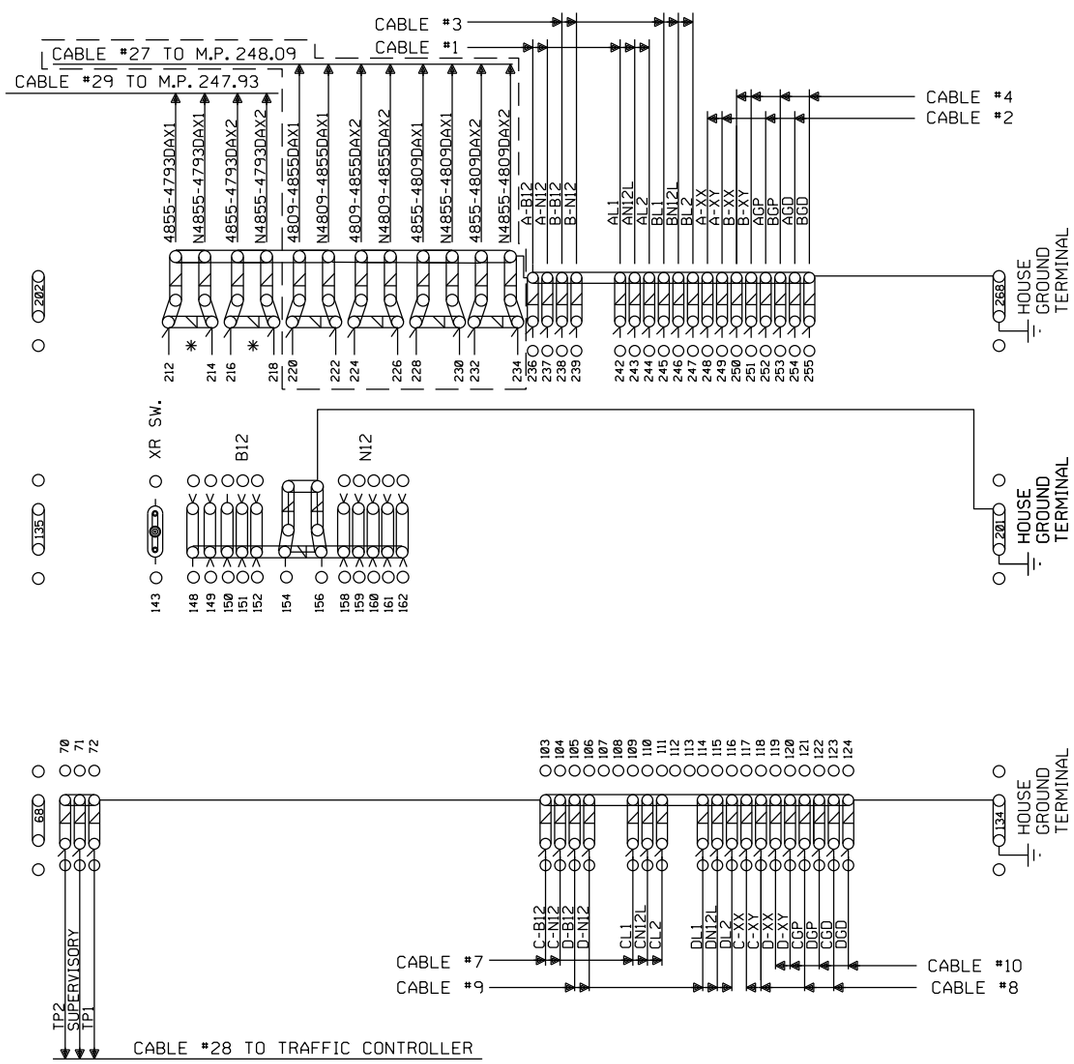

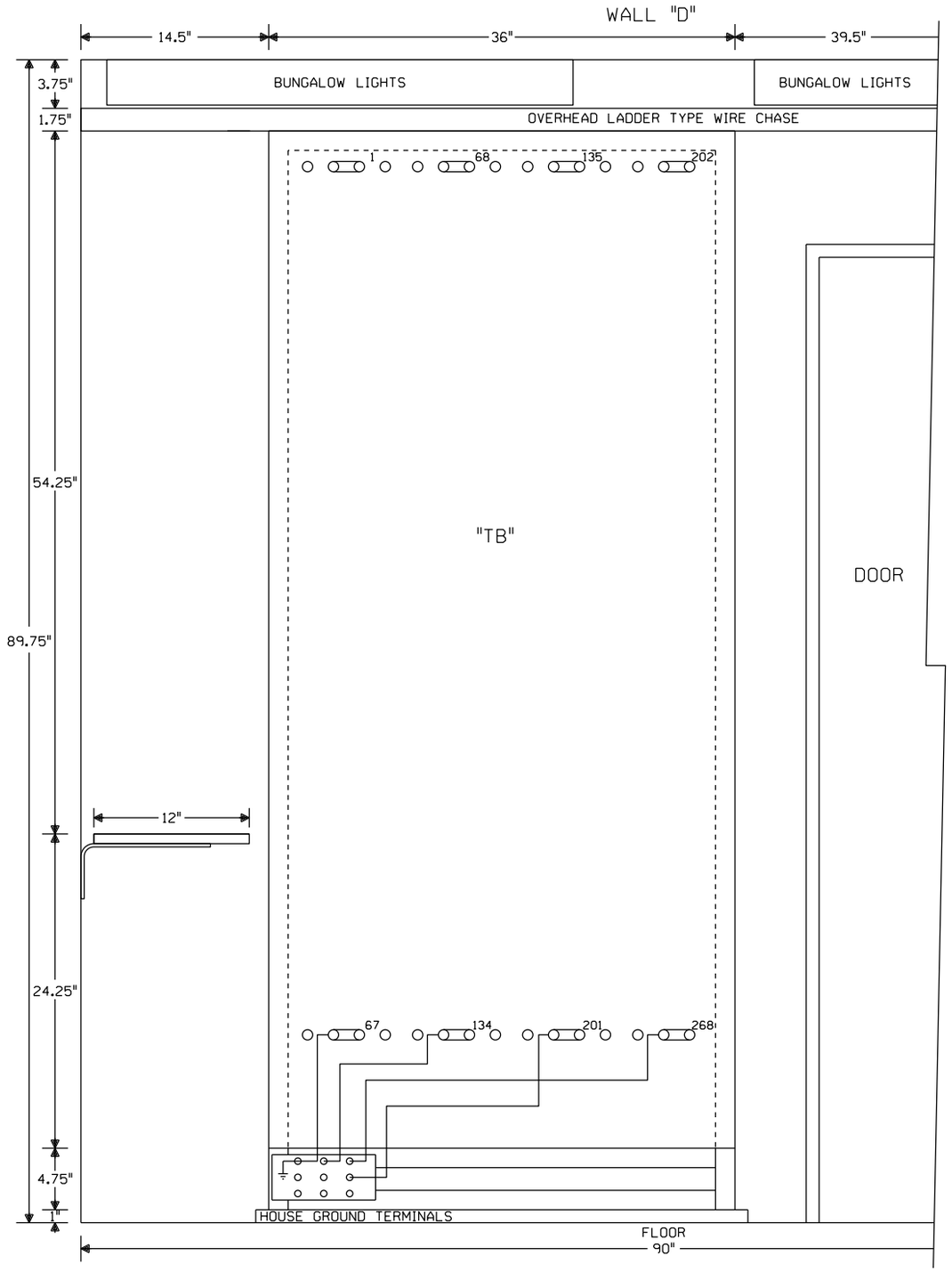

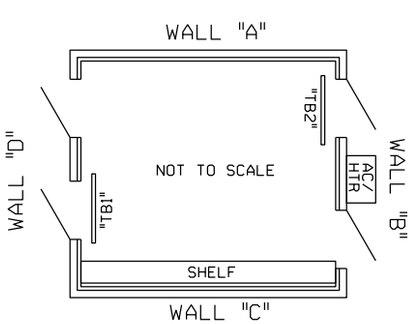

NOTE: ALL DIMENSIONS SHOWN ARE APPROXIMATE.

0 1 2 3 4 FEET

SCALE: 1.5 INCHES = 1 FOOT

✱ = TO BE REMOVED WHEN NEW TERPENING ROAD (M.P. 248.09) IS INSTALLED AND PUT IN SERVICE.

— — — = FUTURE

NEW SHEET

Designed: 03/10/16

TIER 1S PHASE 1 M.P. 239.70 TO M.P. 255.35 TO UPGRADE XING TO 4 QUAD WITH EGMS, VARIOUS C.P.'S

Rec*: WO*: 10804

1S: NBT /

/ /NST/MJF

CIRCUIT MODIFICATIONS ARE NOT TO BE MADE WITHOUT AUTHORITY FROM THE OFFICE OF SIGNAL DESIGN

Date:	03/10/16
Des:	NST
Chk:	NBT
AFE:	10804

UNION PACIFIC RAILROAD

BRIGHTON, ILLINOIS
DAVID ACRES ROAD
SPRINGFIELD SUBDIVISION

Office of AVP Engineering - Signal — Omaha, Nebraska

Sh.:	22
DOT	294423L
MP:	248.55
ID:	CSL24855.22X

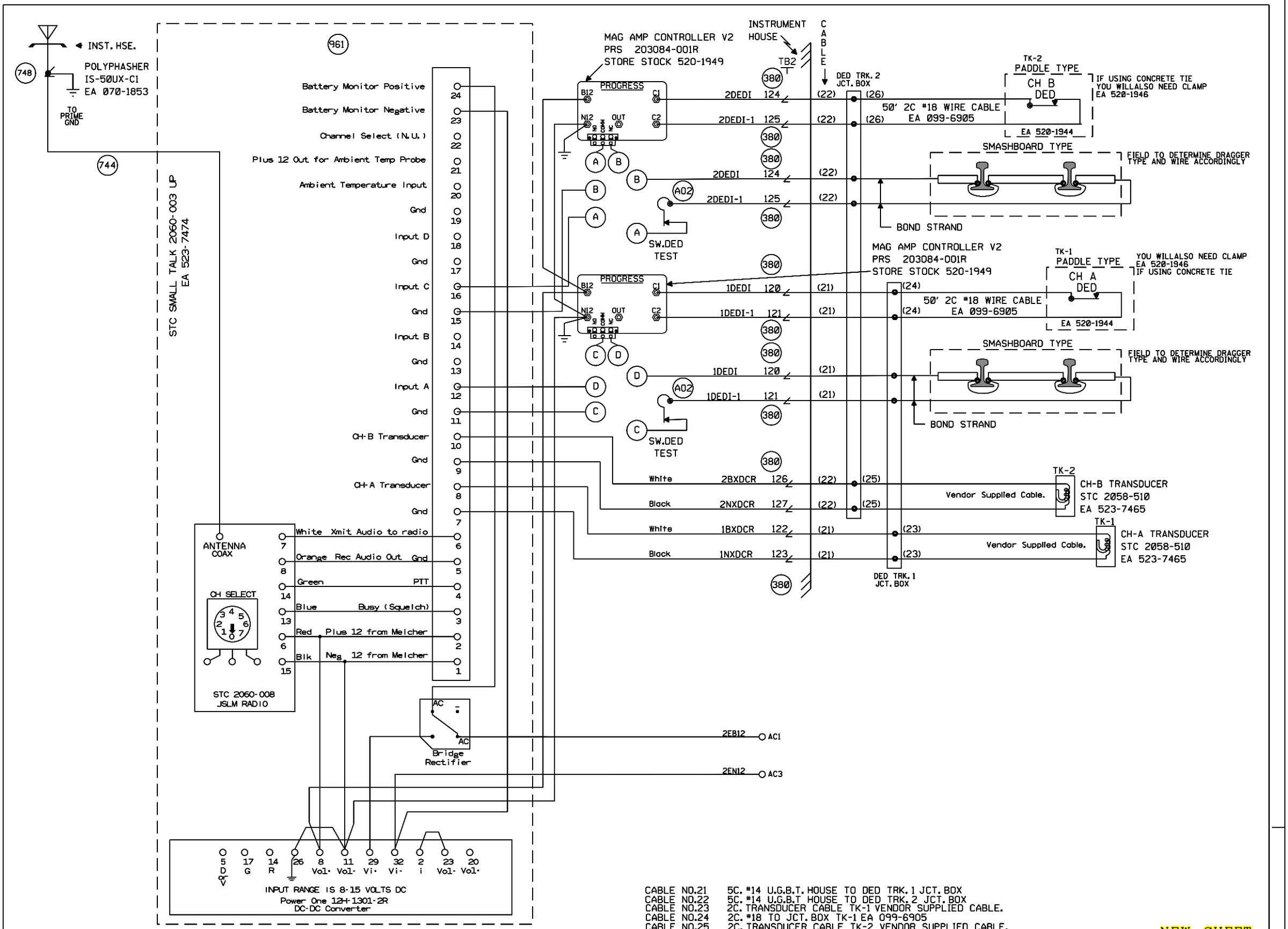

CABLE NO.21 5C. #14 U.G.B.T. HOUSE TO DED TRK. 1 JCT. BOX
CABLE NO.22 5C. #14 U.G.B.T HOUSE TO DED TRK. 2 JCT. BOX
CABLE NO.23 2C. TRANSDUCER CABLE TK-1 VENDOR SUPPLIED CABLE.
CABLE NO.24 2C. #18 TO JCT. BOX TK-1 EA 099-6905
CABLE NO.25 2C. TRANSDUCER CABLE TK-2 VENDOR SUPPLIED CABLE.
CABLE NO.26 2C. #18 TO JCT. BOX TK-2 EA 099-6905

NEW SHEET

Designed: 03/10/16
TIER IS PHASE 1 M.P. 239.70 TO M.P. 255.35 TO UPGRADE XING TO 4 QUAD WITH EGMS, VARIOUS C.P.'S
Rec*: NBT / WO*: 10804
IS: / NST/MJF

MODIFICATION LEVEL	
Q.A. LAST LEVEL CHECKED	DU
LAST LEVEL MOD THIS TYPICAL	DU
LAST LEVEL BY DESIGNER	DU
CHANGED FROM TYPICAL?	Y

rev 8/20/10 1TMLHBINTU.7

CIRCUIT MODIFICATIONS ARE NOT TO BE MADE WITHOUT AUTHORITY FROM THE OFFICE OF SIGNAL DESIGN

Date: 03/10/16
Des: NST
Chk: NBT
AFE: 10804

UNION PACIFIC RAILROAD
BRIGHTON, ILLINOIS
DAVID ACRES ROAD
SPRINGFIELD SUBDIVISION
Office of AVP Engineering - Signal Omaha, Nebraska

Sh.: 23
DOT 294423L
MP: 248.55
ID: CSL24855.23S

Minimum Program Steps Report

Location and SIN

DOT Number: 294423L
Milepost Number: 248.55
Site Name: BRIGHTON, IL

SIN: 762010010016 *

* Parameter is part of office check number calculation.

MCF and Template Selection

MCF Name: GCP-T6X-02-6.mcf
MCF Revision: 26
MCFCRC: 494D2656

Template = 1D:3 Uni pairs (OCCN) *

* Parameter is part of office check number calculation.

Minimum Program Steps

MS4000 configuration
Track 1 : GCP Frequency = 86 Hz (OCCN,TCN) (Hidden) *
Track 1 : Isl Frequency = 4.9 kHz (OCCN) (Hidden) *
Track 1 : Pickup Delay (2s +) = 2 sec (OCCN) (Hidden) *
IN 1.1 = Preempt Health (OCCN) (Hidden) *
IN 1.2 = Out Of Service IP 1 (OCCN) (Hidden) *

MS4000 Predictor
Track 1 : Prime Warning Time = 40 sec (OCCN) (Hidden) *

BASIC: module configuration
Track 3/PSO 2 Slot = Track (OCCN) *
Track 4/PSO 3 Slot = Track (OCCN) *
Track 5/RIO 2 Slot = RIO (OCCN) *

BASIC: preemption
Preempt Logic = Simult (OCCN) *

PREDICTORS: track 2
Track 2 : Dax A Used = Yes (OCCN) *

PREDICTORS: track 4
Track 4 : Dax A Used = Yes (OCCN) *

GCP: track 1
Track 1 : GCP Frequency = 86 Hz (OCCN,TCN) *
Track 1 : Approach Distance = 5216 ft (OCCN,TCN) *
Track 1 : Island Distance = 123 ft (Set in Field,TCN)

GCP: track 1 prime
Track 1 : Prime Warning Time = 40 sec (OCCN) *

GCP: track 2
Track 2 : GCP Frequency = 86 Hz (OCCN,TCN) *
Track 2 : Approach Distance = 5216 ft (OCCN,TCN) *

GCP: track 2 prime
Track 2 : Prime Warning Time = 40 sec (OCCN) *

GCP: track 2 Dax A
Track 2 : Dax A Warning Time = 27 sec (OCCN) *
Track 2 : Dax A Offset Distance = 3244 ft (OCCN) *

GCP: track 3
Track 3 : GCP Frequency = 86 Hz (OCCN,TCN) *
Track 3 : Approach Distance = 5216 ft (OCCN,TCN) *
Track 3 : Island Distance = 123 ft (Set in Field,TCN)

GCP: track 3 prime
Track 3 : Prime Warning Time = 40 sec (OCCN) *

GCP: track 4
Track 4 : GCP Frequency = 86 Hz (OCCN,TCN) *
Track 4 : Approach Distance = 5216 ft (OCCN,TCN) *

GCP: track 4 prime
Track 4 : Prime Warning Time = 40 sec (OCCN) *

GCP: track 4 Dax A
Track 4 : Dax A Warning Time = 27 sec (OCCN) *
Track 4 : Dax A Offset Distance = 3244 ft (OCCN) *

ISLAND: track 1
Track 1 : Isl Frequency = 4.9 kHz (OCCN) *
Track 1 : Pickup Delay (2s +) = 2 sec (OCCN) *

ISLAND: track 3
Track 3 : Isl Frequency = 5.9 kHz (OCCN) *
Track 3 : Pickup Delay (2s +) = 2 sec (OCCN) *

AND: track Anding
AND 2 Used = Yes (OCCN) *
AND 3 Used = Yes (OCCN) *

AND: AND 1 XR
AND 1 Enable Used = Yes (OCCN) *

AND: AND 2
AND 2 Track 1 = Prime (OCCN) *
AND 2 Track 2 = Prime (OCCN) *

AND: AND 3

AND 3 Track 3 = Prime (OCCN) *
AND 3 Track 4 = Prime (OCCN) *

ADVANCED: out of service
OOS Control = OOS IPs (OCCN) *

ADVANCED: out of service 2
T2 OOS Control = OOS Input 1 (OCCN) *
T3 OOS Control = OOS Input 2 (OCCN) *
T4 OOS Control = OOS Input 2 (OCCN) *

SSCC
Bell On Gate Rising = Yes (OCCN) *

SSCC: 2
SSCC-2 Number of GPs = 2 (OCCN) *
SSCC-2 Number of GDs = 2 (OCCN) *

OUTPUT: assignment page 1
OUT 1.1 = AND 1 XR (OCCN) *
OUT 1.2 = T1 Island (OCCN) *
OUT 2.1 = T2 Dax A (OCCN) *
OUT 2.2 = T3 Island (OCCN) *

OUTPUT: assignment page 2
OUT 4.1 = T4 Dax A (OCCN) *
OUT 4.2 = Sim Preempt (OCCN) *
OUT 5.1 = AND 2 (OCCN) *
OUT 5.2 = AND 3 (OCCN) *

INPUT: assignment page 1
IN 1.1 = Preempt Health (OCCN) *
IN 1.2 = Out Of Service IP 1 (OCCN) *
IN 2.2 = Out Of Service IP 2 (OCCN) *

INPUT: assignment page 2
IN 5.1 = AND 1 XR Enable (OCCN) *
IN 5.2 = GP 1.1 (OCCN) *

IO: assignment SSCC
IN 7.1 = AND 1 XR Enable (OCCN) *
IN 7.2 = GD 1.1 (OCCN) *
IN 7.4 = GD 1.2 (OCCN) *
IN 8.2 = GD 2.1 (OCCN) *
IN 8.3 = GP 2.1 (OCCN) *
IN 8.4 = GD 2.2 (OCCN) *
IN 8.5 = GP 2.2 (OCCN) *

SEAR: inputs
SP 3.1 = General 3 (OCCN) *
SP 4.1 = General 4 (OCCN) *

SEAR: slot 1-4 inputs
IN 4.1 = Vehicle Det Hlth (OCCN) *

IN 4.2 = 3 Vehicle Detect (OCCN) *

SEAR: inputs slot 5
IN 5.3 = General 1 (OCCN) *
IN 5.4 = General 2 (OCCN) *

Express: MS4000 configuration
Track 1 : GCP Frequency = 86 Hz (OCCN,TCN) (Hidden) *
Track 1 : Pickup Delay (2s +) = 2 sec (OCCN) (Hidden) *
IN 1.1 = Preempt Health (OCCN) (Hidden) *
IN 1.2 = Out Of Service IP 1 (OCCN) (Hidden) *

Express: MS4000 Predictor
Track 1 : Prime Warning Time = 40 sec (OCCN) (Hidden) *

* Parameter is part of office check number calculation.

Check Numbers

Office Check Number: 65D36969
Config. Check Number: 37603B82
(Based on MCF Revision 26)

Parameters not part of office check number calculation:

Track 1 : Island Distance = 123 ft (Set in Field)
Track 3 : Island Distance = 123 ft (Set in Field)

Comments

<none>

Configuration Package File

Filename: CSL24855_294423L.pac
Path: H:\UP\Springfield Sub Tier 1 Ph. 1 11-419-1\PAC Files\MP 248.55 (Stage 1)\
Date/Time: 5/16/2016 8:25:17
DT Version: 5.7.3