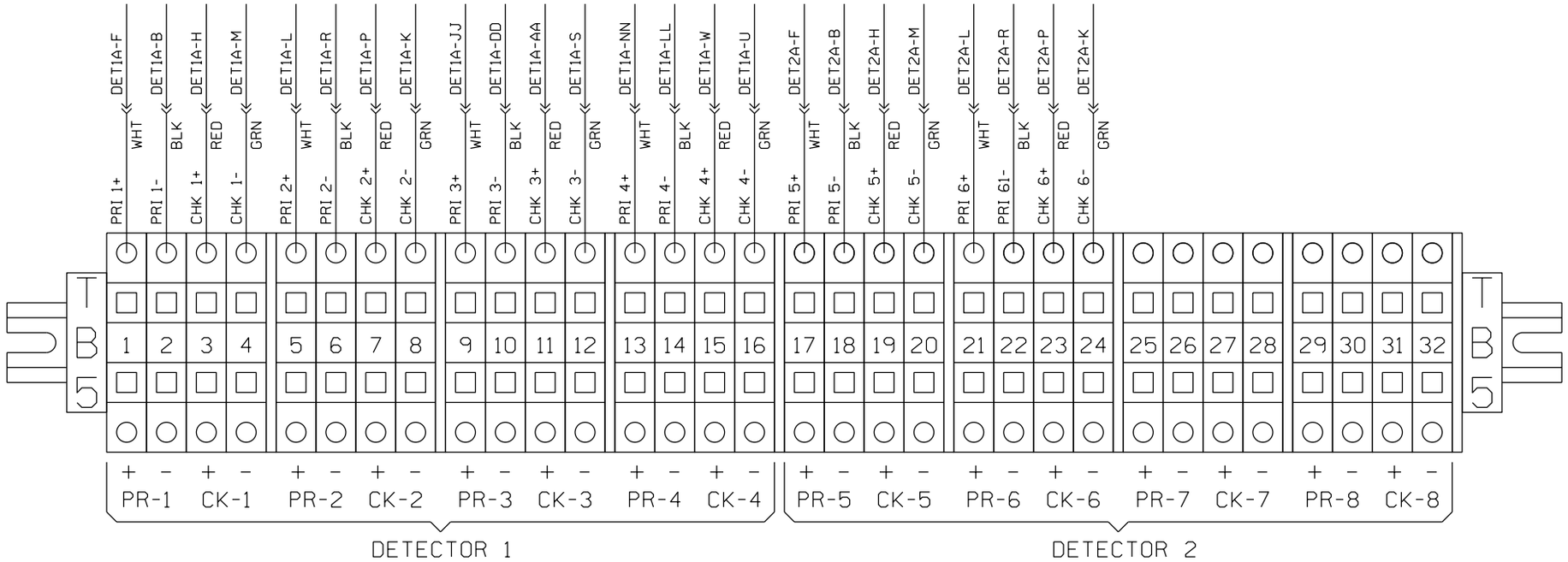

NEW SHEET

					Designed: 03/10/16 TIER IS PHASE 1 M.P. 239.70 TO M.P. 255.35 TO UPGRADE XING TO 4 QUAD WITH EGMS, VARIOUS C.P.'S Rec*: WO*: 10804 IS: NBT / / / NST/MJF	MODIFICATION LEVEL		CIRCUIT MODIFICATIONS ARE NOT TO BE MADE WITHOUT AUTHORITY FROM THE OFFICE OF SIGNAL DESIGN	Date: 03/10/16 Des: NST Chk: NBT AFE: 10804	UNION PACIFIC RAILROAD BRIGHTON, ILLINOIS DAVID ACRES ROAD SPRINGFIELD SUBDIVISION Office of AVP Engineering - Signal Omaha, Nebraska	Sh.: 9C DOT 294423L MP: 248.55 ID: CSL24855.9CX
						Q.A. LAST LEVEL CHECKED	DU				
						LAST LEVEL MOD THIS TYPICAL	DU				
						LAST LEVEL BY DESIGNER	DU				
						CHANGED FROM TYPICAL? REV 01.24.11 4K 2TKEGMS.9D	Y				

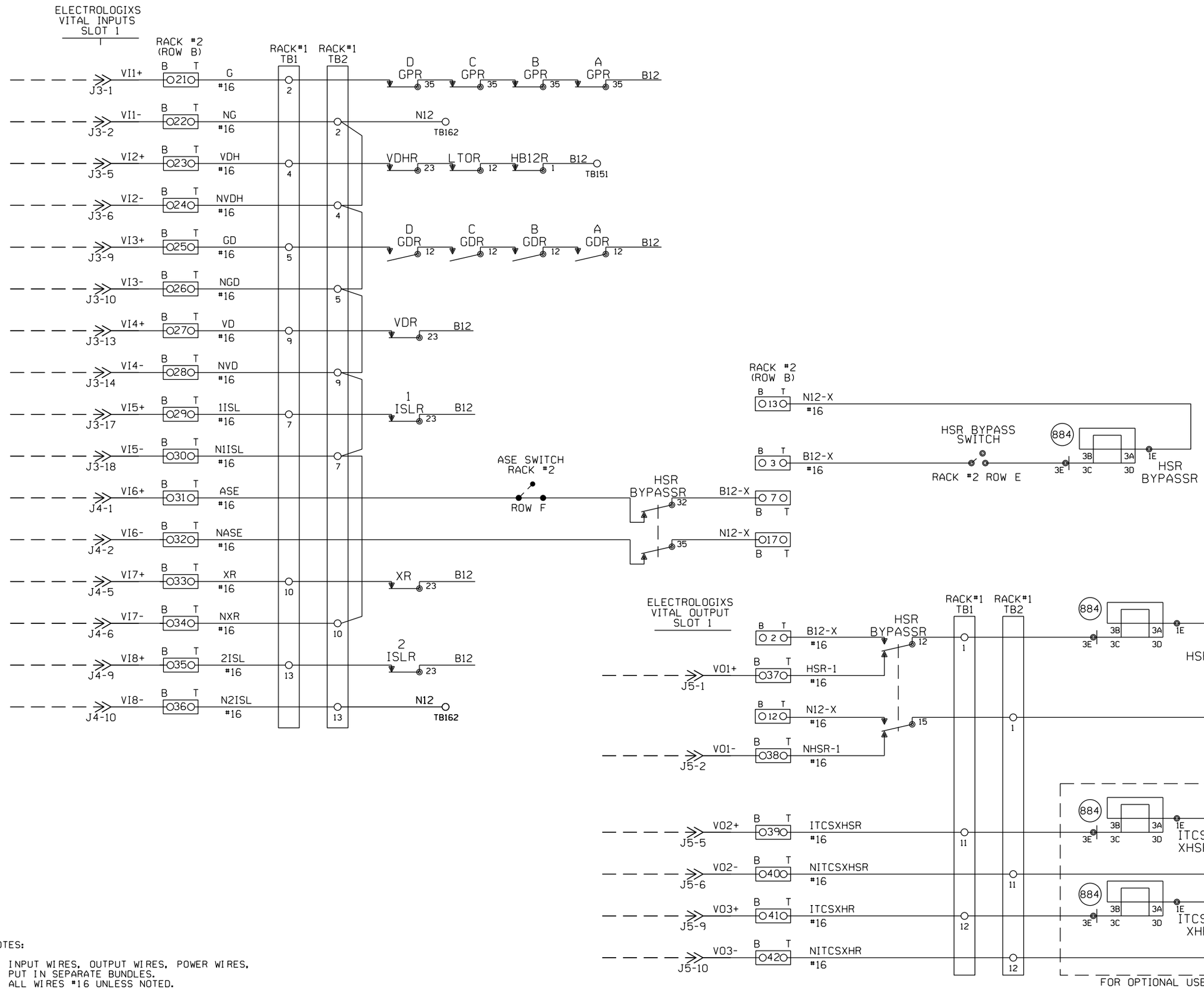

NOTES:

1. INPUT WIRES, OUTPUT WIRES, POWER WIRES, PUT IN SEPARATE BUNDLES.
2. ALL WIRES #16 UNLESS NOTED.
3. O?? O 2 POSITION WAGO BLOCK.

NEW SHEET

Designed: 03/10/16
TIER IS PHASE 1 M.P. 239.70 TO M.P. 255.35 TO UPGRADE XING TO 4 QUAD WITH EGMS, VARIOUS C.P.'S
Rec#: WO#: 10804
IS: NBT / / /NST/MJF

CIRCUIT MODIFICATIONS ARE NOT TO BE MADE WITHOUT AUTHORITY FROM THE OFFICE OF SIGNAL DESIGN

Date:	03/10/16
Des:	NST
Chk:	NBT
AFE:	10804

UNION PACIFIC RAILROAD

BRIGHTON, ILLINOIS
DAVID ACRES ROAD
SPRINGFIELD SUBDIVISION

Office of AVP Engineering - Signal — Omaha, Nebraska

Sh.:	10
DOT	294423L
MP:	248.55
ID:	CSL24855.10X

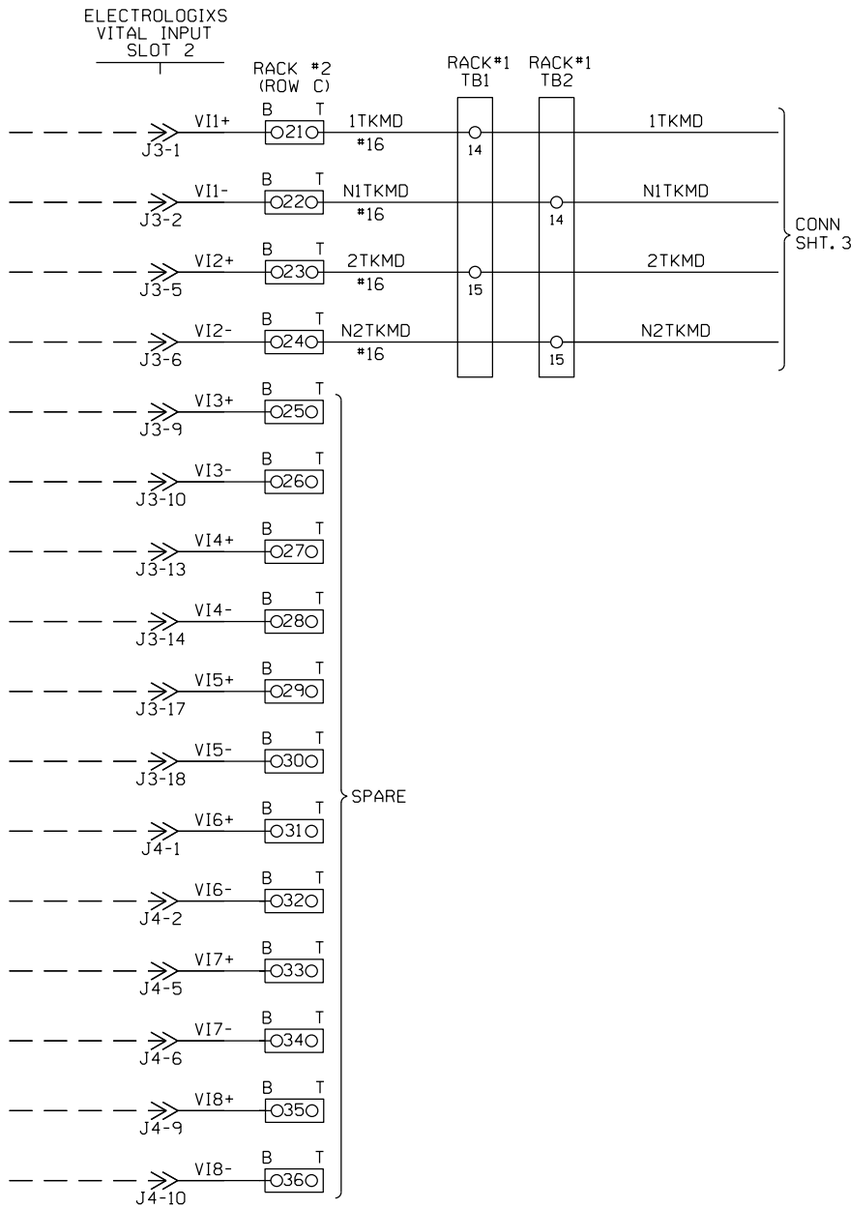

NOTES:

1. INPUT WIRES, OUTPUT WIRES, POWER WIRES, PUT IN SEPARATE BUNDLES.
2. ALL WIRES #16 UNLESS NOTED.
3. [O?? O] 2 POSITION WAGO BLOCK.

NEW SHEET

Designed: 03/10/16

TIER IS PHASE 1 M.P. 239.70 TO M.P. 255.35 TO UPGRADE XING TO 4 QUAD WITH EGMS, VARIOUS C.P.'S

Rec*: WO*: 10804
IS: NBT /
/ /NST/MJF

CIRCUIT MODIFICATIONS ARE NOT TO BE MADE WITHOUT AUTHORITY FROM THE OFFICE OF SIGNAL DESIGN

Date:	03/10/16
Des:	NST
Chk:	NBT
AFE:	10804

UNION PACIFIC RAILROAD

BRIGHTON, ILLINOIS
DAVID ACRES ROAD
SPRINGFIELD SUBDIVISION

Office of AVP Engineering - Signal Omaha, Nebraska

Sh.:	10A
DOT	294423L
MP:	248.55
ID:	CSL24855.10AX

WIRING NOTE:
WIRE 30' LONG WIRES TO BSA-4

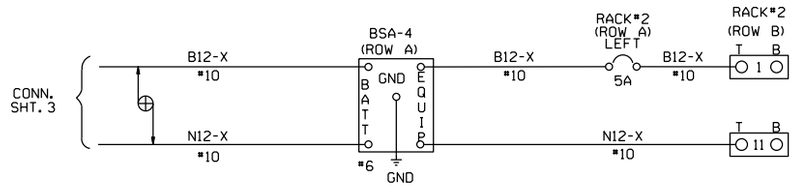

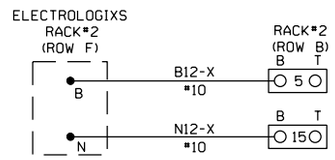

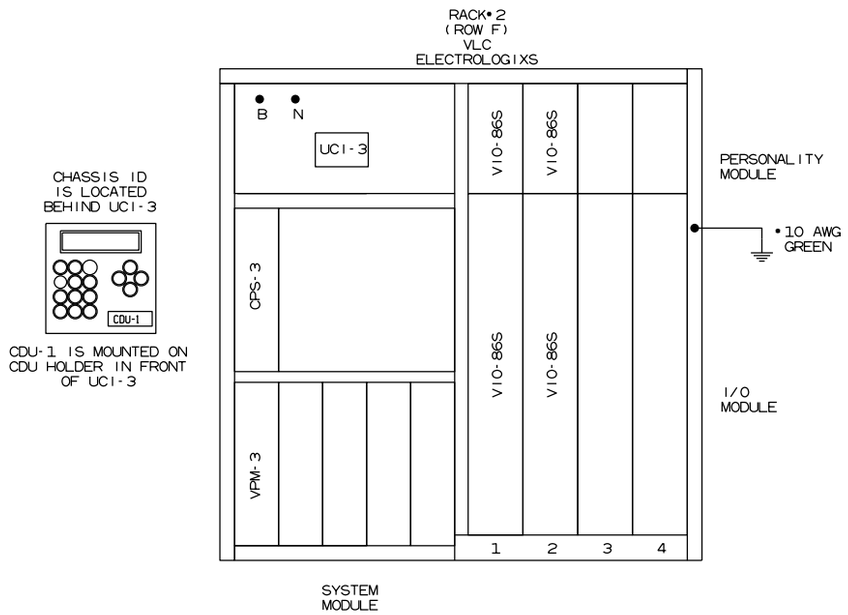

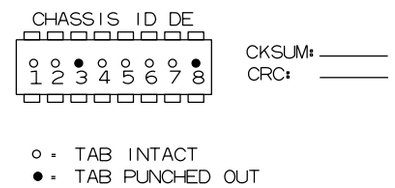

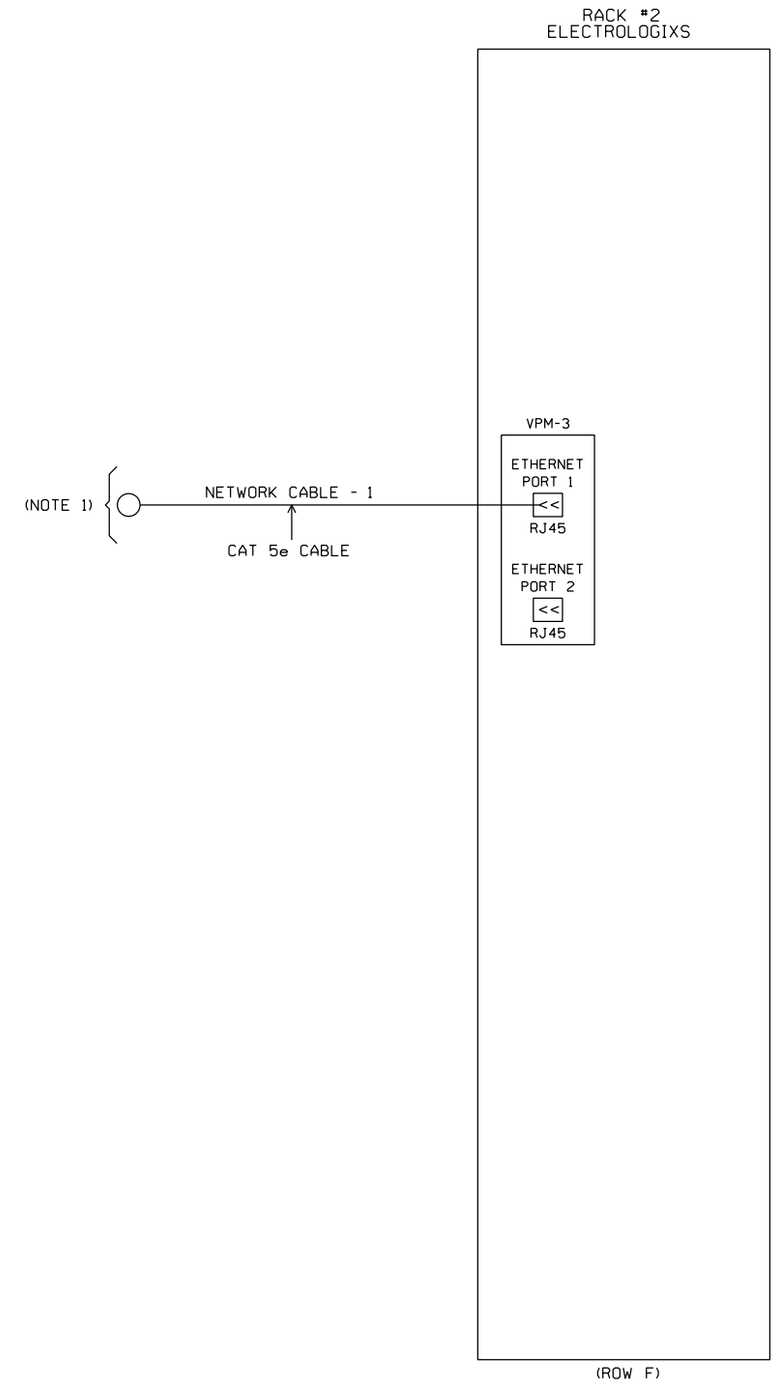

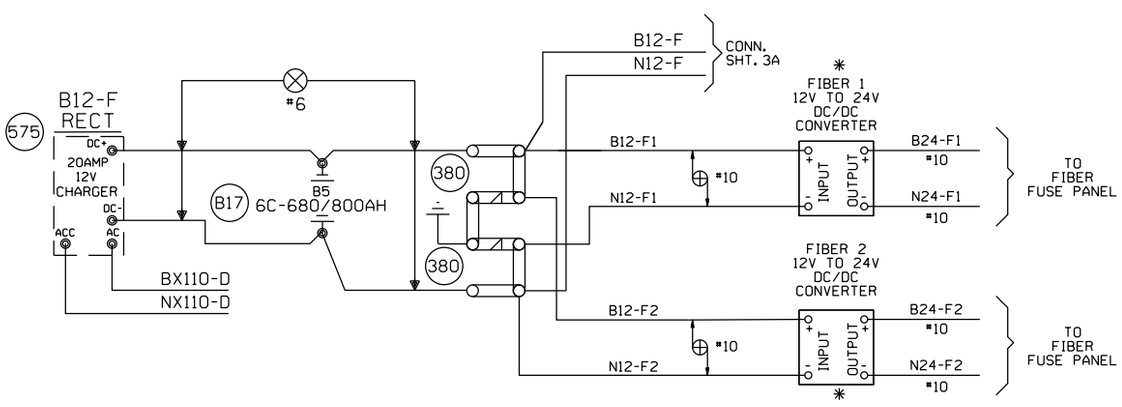

NOTES:

1. NETWORK SWITCH INSTALLED BY RR.

DENOTES TWISTED PAIR

O?? O 2 POSITION WAGO BLOCK

✳ - TO BE FIELD MOUNTED AFTER IT IS DETERMINED WHERE TO MOUNT.

NEW SHEET

							Designed: 03/10/16 TIER IS PHASE 1 M.P. 239.70 TO M.P. 255.35 TO UPGRADE XING TO 4 QUAD WITH EGMS, VARIOUS C.P.'S Rec#: W0#: 10804 IS: NBT / / / NST/MJF	CIRCUIT MODIFICATIONS ARE NOT TO BE MADE WITHOUT AUTHORITY FROM THE OFFICE OF SIGNAL DESIGN	Date: 03/10/16 Des: NST Chk: NBT AFE: 10804	UNION PACIFIC RAILROAD BRIGHTON, ILLINOIS DAVID ACRES ROAD SPRINGFIELD SUBDIVISION Office of AVP Engineering - Signal Omaha, Nebraska	Sh.: 10B DOT 294423L MP: 248.55 ID: CSL24855.10BX

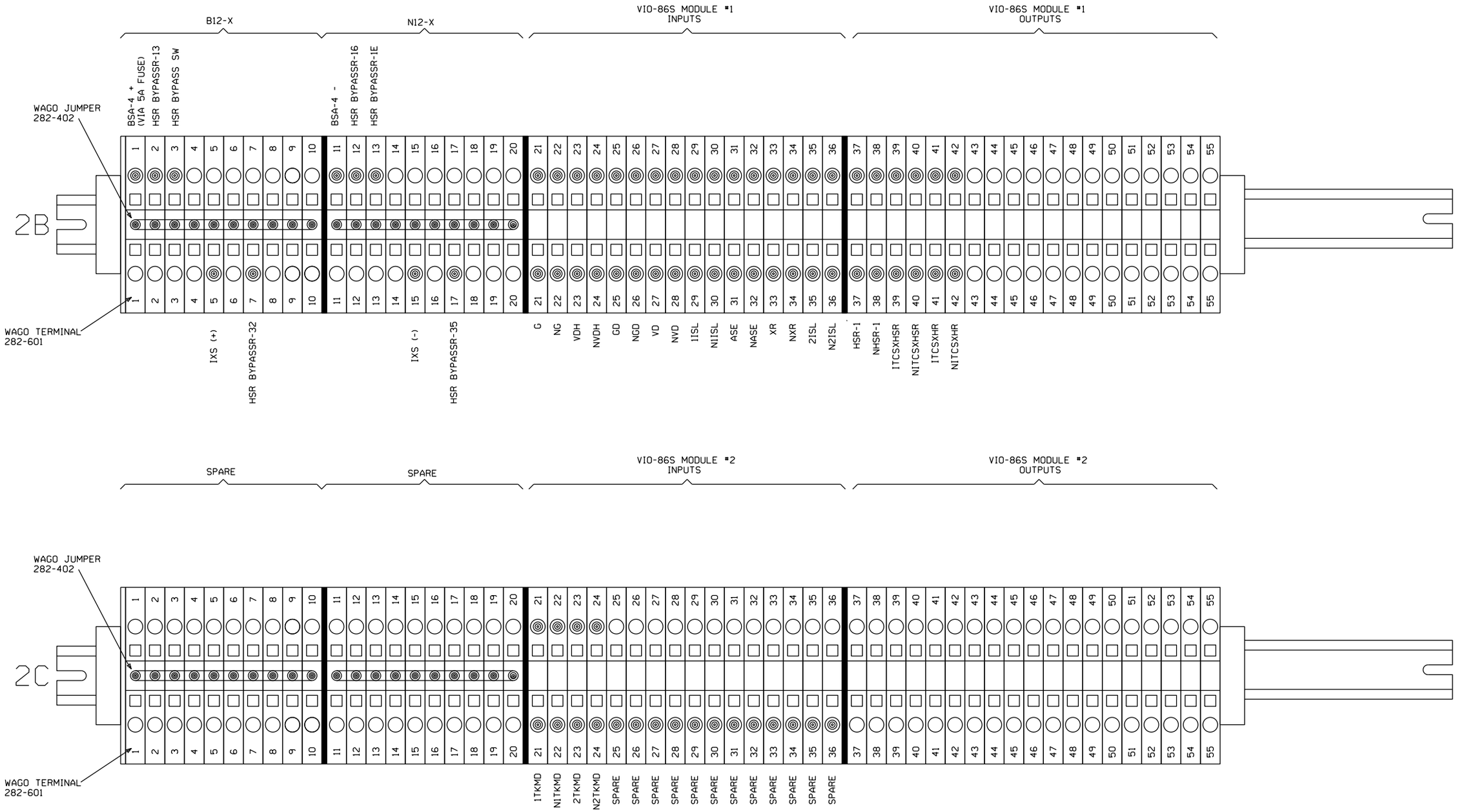

ELECTROLOGIXS WAGO BLOCKS

NEW SHEET

							Designed: 03/10/16 TIER 1S PHASE 1 M.P. 239.70 TO M.P. 255.35 TO UPGRADE XING TO 4 QUAD WITH EGMS, VARIOUS C.P.'S Rec#: WO#: 10804 IS: NBT / / / NST/MJF	CIRCUIT MODIFICATIONS ARE NOT TO BE MADE WITHOUT AUTHORITY FROM THE OFFICE OF SIGNAL DESIGN	Date: 03/10/16 Des: NST Chk: NBT AFE: 10804	UNION PACIFIC RAILROAD BRIGHTON, ILLINOIS DAVID ACRES ROAD SPRINGFIELD SUBDIVISION Office of AVP Engineering - Signal Omaha, Nebraska	Sh.: 10C DOT 294423L MP: 248.55 ID: CSL24855.10CX

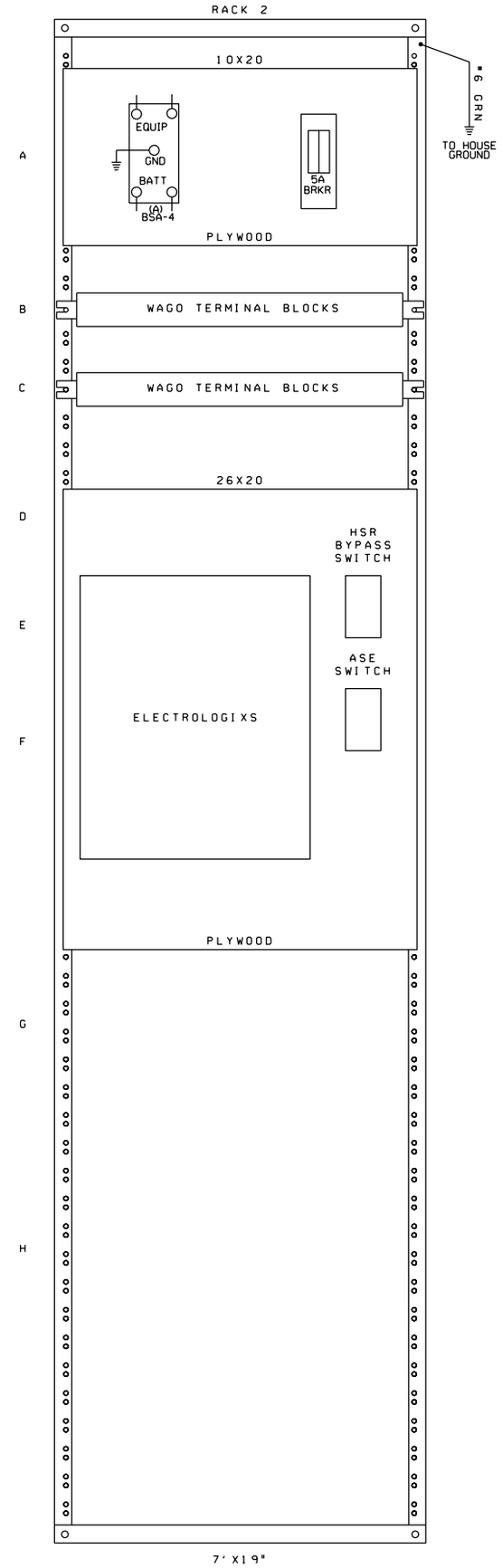

NEW SHEET

							Designed: 03/10/16 TIER 1S PHASE 1 M.P. 239.70 TO M.P. 255.35 TO UPGRADE XING TO 4 QUAD WITH EGMS, VARIOUS C.P.'S Rec#: WO#: 10804 IS: NBT / / /NST/MJF	CIRCUIT MODIFICATIONS ARE NOT TO BE MADE WITHOUT AUTHORITY FROM THE OFFICE OF SIGNAL DESIGN	Date: 03/10/16 Des: NST Chk: NBT AFE: 10804	UNION PACIFIC RAILROAD BRIGHTON, ILLINOIS DAVID ACRES ROAD SPRINGFIELD SUBDIVISION Office of AVP Engineering - Signal Omaha, Nebraska	Sh.: 10D DOT 294423L MP: 248.55 ID: CSL24855.10DX

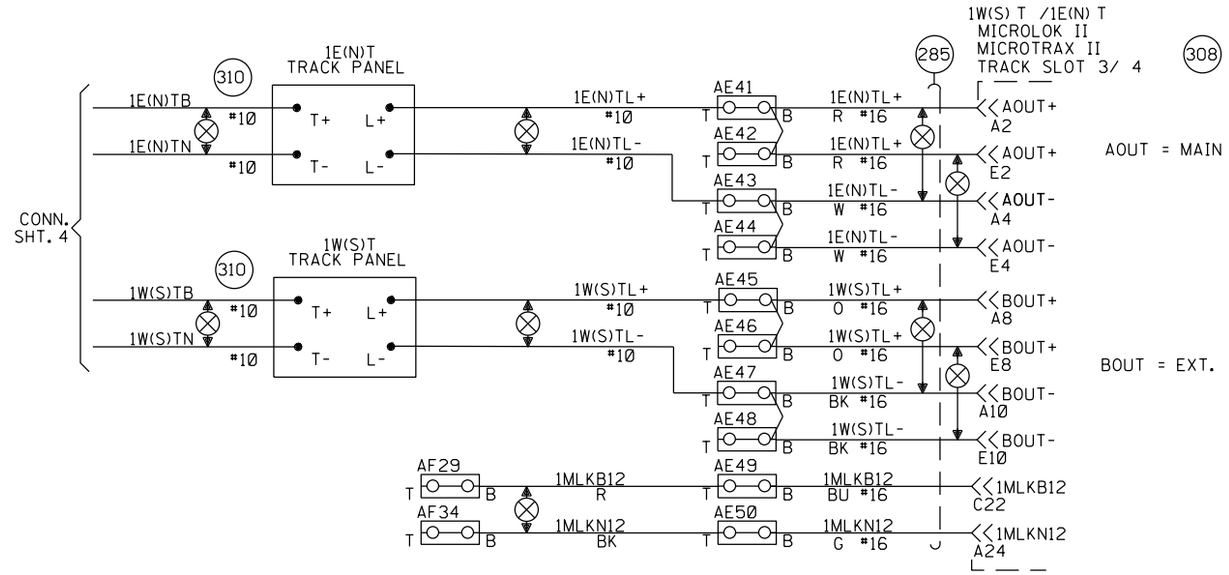

NOTES:

EAST= (N)ORTH.
WEST= (S)OUTH.

⊘ = OBSERVE CORRECT POLARITY. EQUIPMENT WILL BE DAMAGED IF CONNECTIONS ARE REVERSED

ENSURE TRACK POLARITY IS TRANSPOSED ACROSS ALL INSULATED JOINTS.

⧗ = TEST TERMINALS MUST BE INSTALLED ON ALL WIRING CONNECTED TO EXTERNAL CABLES (EXCEPT TRACK AND A.C. POWER WIRES).

SHOW ACTUAL DED INSTALLED LOCATION ON DRAWING.

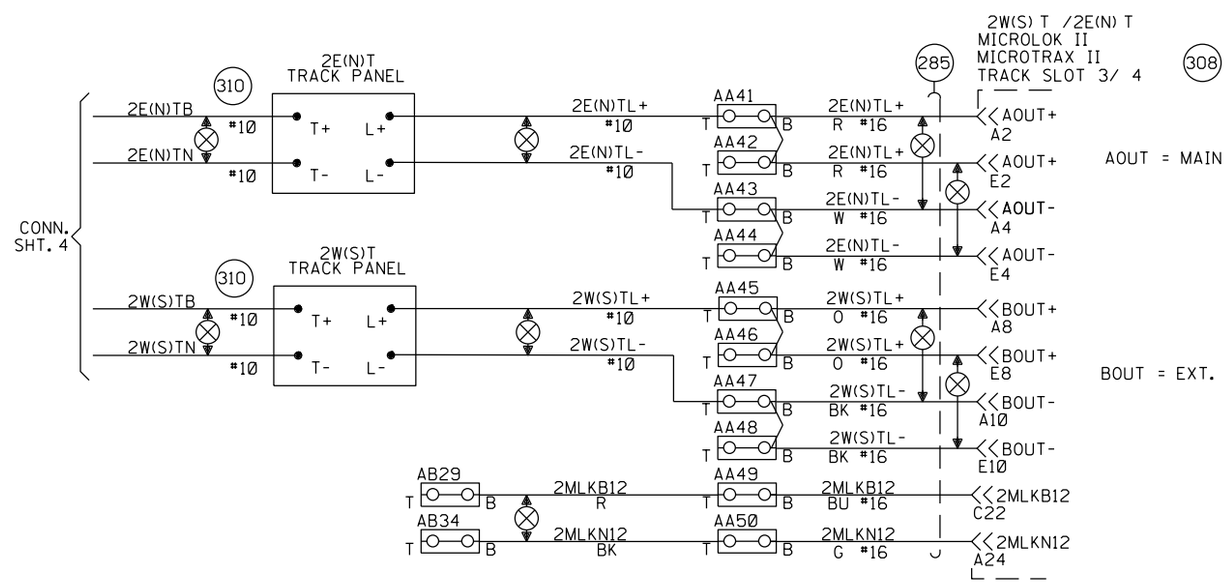

NEW SHEET

					Designed: 03/10/16 TIER IS PHASE 1 M.P. 239.70 TO M.P. 255.35 TO UPGRADE XING TO 4 QUAD WITH EGMS, VARIOUS C.P.'S Rec#: WO#: 10804 IS: NBT / / NST/MJF	MODIFICATION LEVEL Q.A. LAST LEVEL CHECKED DU LAST LEVEL MOD THIS TYPICAL DU LAST LEVEL BY DESIGNER DU CHANGED FROM TYPICAL? Y REV 8/20/10 ITMLHBINTU.1	CIRCUIT MODIFICATIONS ARE NOT TO BE MADE WITHOUT AUTHORITY FROM THE OFFICE OF SIGNAL DESIGN	Date: 03/10/16 Des: NST Chk: NBT AFE: 10804	UNION PACIFIC RAILROAD BRIGHTON, ILLINOIS DAVID ACRES ROAD SPRINGFIELD SUBDIVISION Office of AVP Engineering - Signal Omaha, Nebraska	Sh.: 11 DOT 294423L MP: 248.55 ID: CSL24855.11S

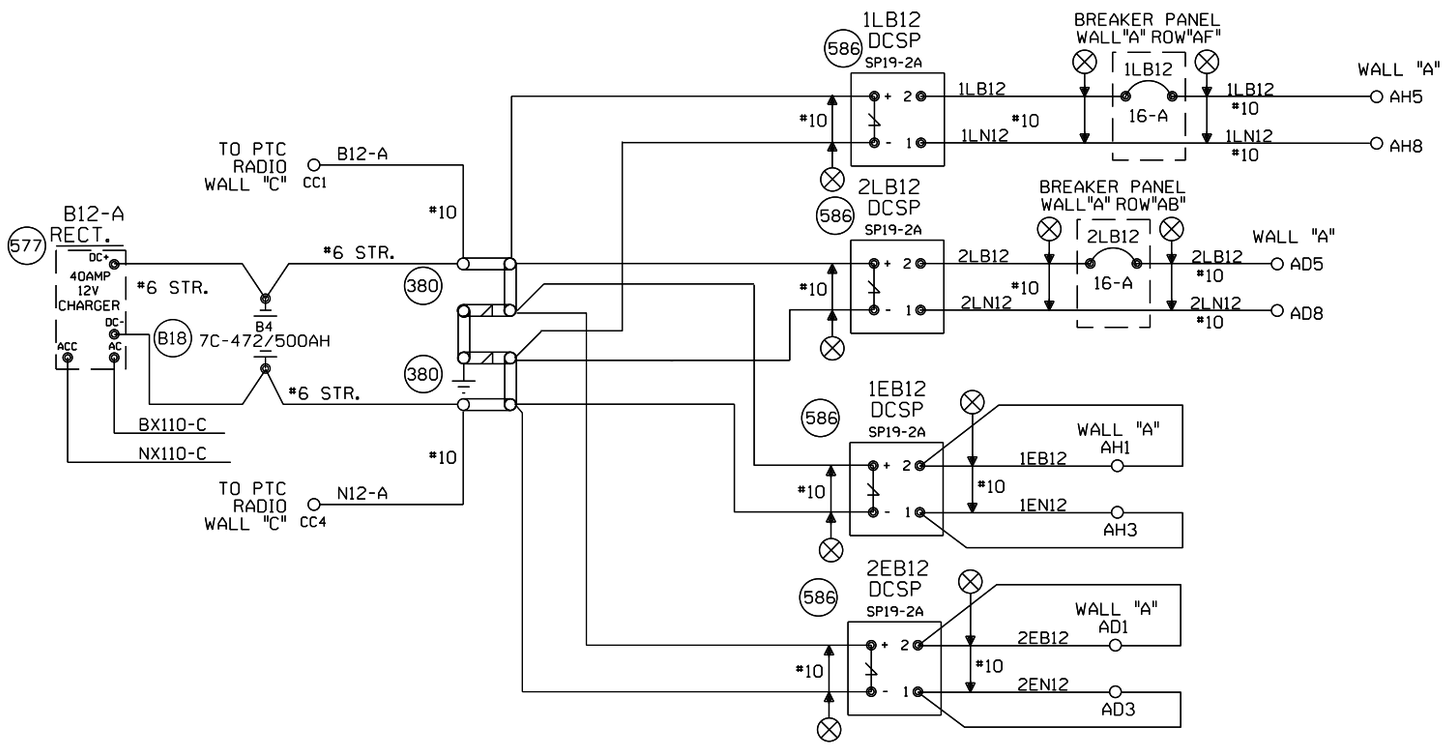

NEW SHEET

Designed: 03/10/16

TIER IS PHASE 1 M.P. 239.70 TO M.P. 255.35 TO UPGRADE XING TO 4 QUAD WITH EGMS, VARIOUS C.P.'S

Rec*: WO*: 10804
IS: NBT / / / NST/MJF

MODIFICATION LEVEL	
O.A. LAST LEVEL CHECKED	DU
LAST LEVEL MOD THIS TYPICAL	DU
LAST LEVEL BY DESIGNER	DU
CHANGED FROM TYPICAL?	Y

REV 8/20/10 ITMLHBINTU.1A

CIRCUIT MODIFICATIONS ARE NOT TO BE MADE WITHOUT AUTHORITY FROM THE OFFICE OF SIGNAL DESIGN

Date: 03/10/16
Des: NST
Chk: NBT
AFE: 10804

UNION PACIFIC RAILROAD

BRIGHTON, ILLINOIS
DAVID ACRES ROAD
SPRINGFIELD SUBDIVISION

Office of AVP Engineering - Signal — Omaha, Nebraska

Sh.: 12
DOT 294423L
MP: 248.55
ID: CSL24855.12S

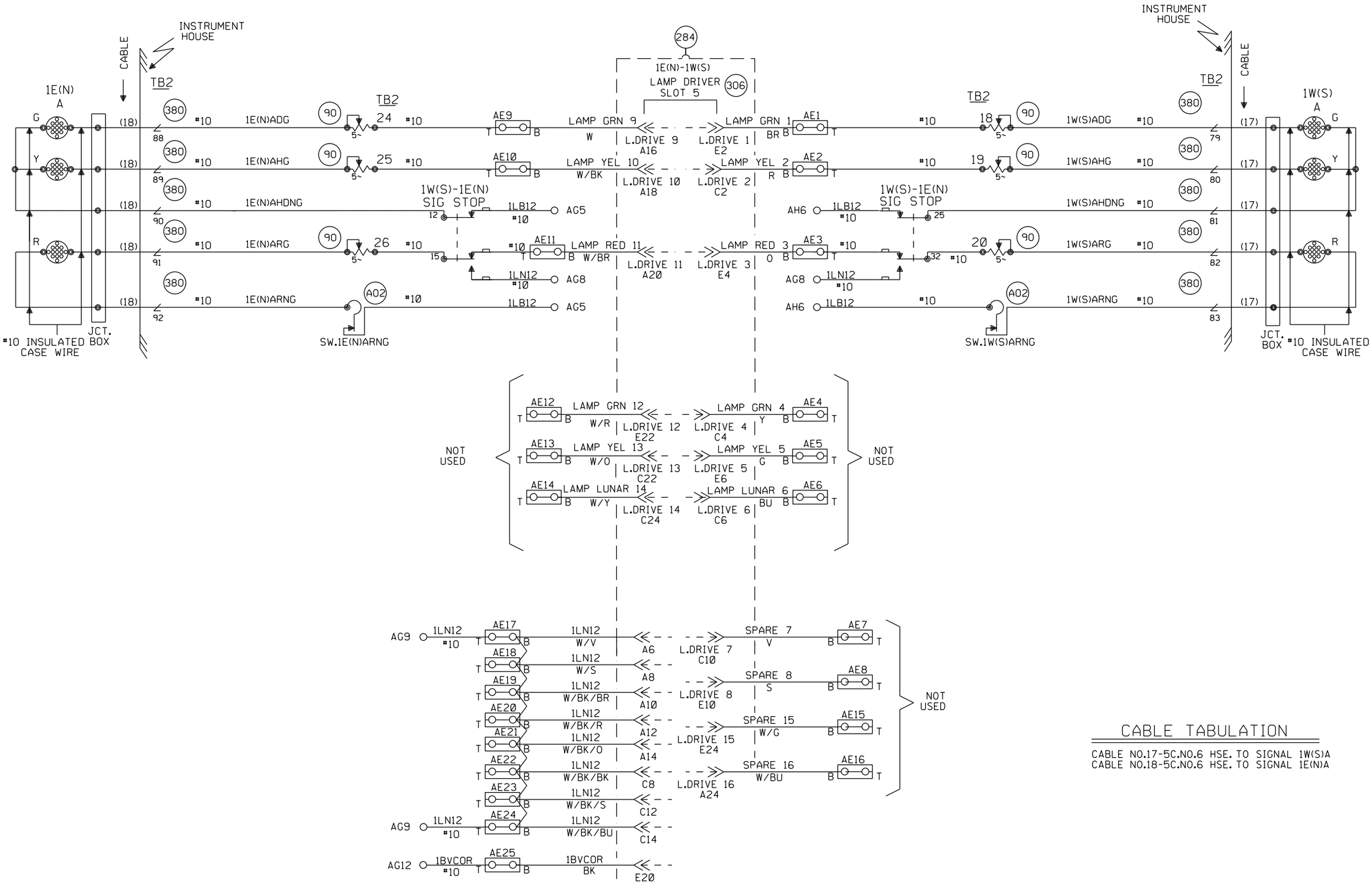

CABLE TABULATION

CABLE NO.17-5C.NO.6 HSE. TO SIGNAL 1W(S)A
CABLE NO.18-5C.NO.6 HSE. TO SIGNAL 1E(N)A

NEW SHEET

Designed: 03/10/16

TIER 1S PHASE 1 M.P. 239.70 TO M.P. 255.35 TO UPGRADE XING TO 4 QUAD WITH EGMS, VARIOUS C.P.'S

Rec#: WO#: 10804
IS: NBT / / /NST/MJF

MODIFICATION LEVEL	
O.A. LAST LEVEL CHECKED	DU
LAST LEVEL MOD THIS TYPICAL	DU
LAST LEVEL BY DESIGNER	DU
CHANGED FROM TYPICAL?	Y

Rev 8/20/10 1TMLHBINTUGS.3

CIRCUIT MODIFICATIONS ARE NOT TO BE MADE WITHOUT AUTHORITY FROM THE OFFICE OF SIGNAL DESIGN

Date: 03/10/16
Des: NST
Chk: NBT
AFE: 10804

UNION PACIFIC RAILROAD

BRIGHTON, ILLINOIS
DAVID ACRES ROAD
SPRINGFIELD SUBDIVISION

Office of AVP Engineering - Signal — Omaha, Nebraska

Sh.: 13
DOT 294423L
MP: 248.55
ID: CSL24855.13S

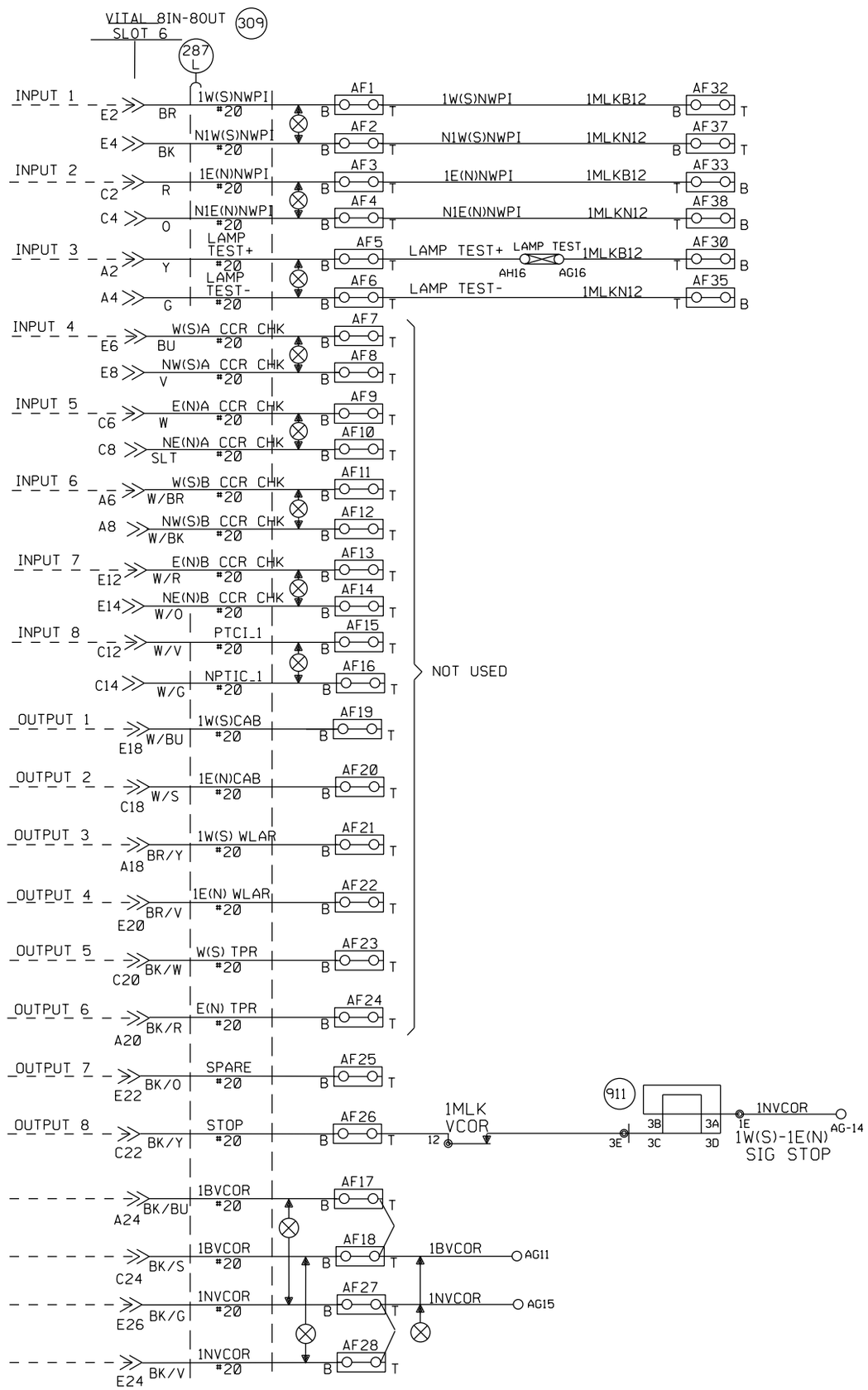

1W(S)-1E(N)T

NEW SHEET

Designed: 03/10/16

TIER 1S PHASE 1 M.P. 239.70 TO M.P. 255.35 TO UPGRADE XING TO 4 QUAD WITH EGMS, VARIOUS C.P.'S

Rec#: WO#: 10804

IS: NBT / / /NST/MJF

MODIFICATION LEVEL	
O. A. LAST LEVEL CHECKED	DU
LAST LEVEL MOD THIS TYPICAL	DU
LAST LEVEL BY DESIGNER	DU
CHANGED FROM TYPICAL?	Y

REV 8/20/10 1TMLHBINTU.3A

CIRCUIT MODIFICATIONS ARE NOT TO BE MADE WITHOUT AUTHORITY FROM THE OFFICE OF SIGNAL DESIGN

Date: 03/10/16
Des: NST
Chk: NBT
AFE: 10804

UNION PACIFIC RAILROAD

BRIGHTON, ILLINOIS
DAVID ACRES ROAD
SPRINGFIELD SUBDIVISION

Office of AVP Engineering - Signal — Omaha, Nebraska

Sh.: 13A
DOT 294423L
MP: 248.55
ID: CSL24855.13AS