PRIME WARNING TIME = 27 SECONDS

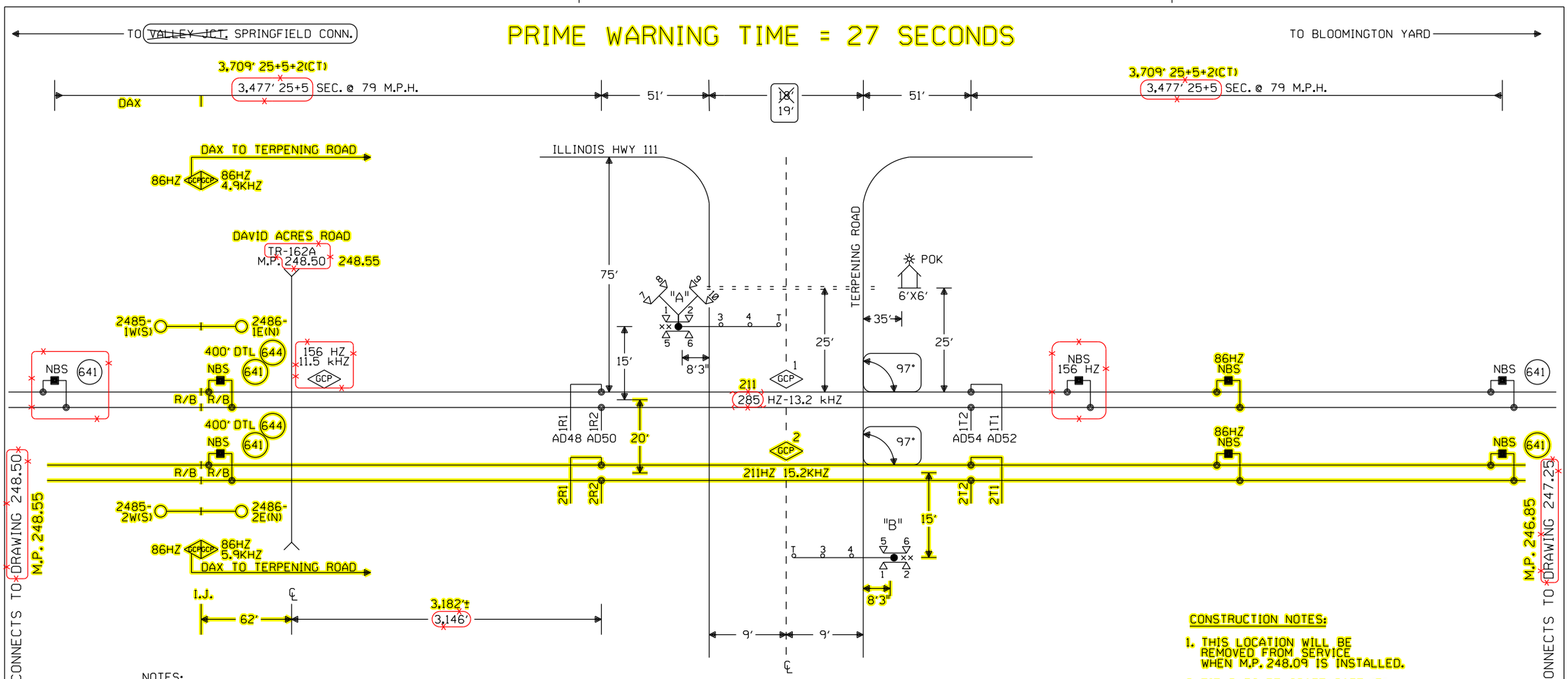

CONSTRUCTION NOTES:

1. THIS LOCATION WILL BE REMOVED FROM SERVICE WHEN M.P. 248.09 IS INSTALLED.
2. FIELD TO RELOCATE GATE "B" FROM EXISTING POSITION TO BELOW NEW BOTTOM TRACK, AS SHOWN.

NOTES:

⊗ = TWISTED WIRES
INSULATED 1 TWIST PER FT.
ALL TRACK WIRES 2C. #6

TRANSMITTER AND RECEIVER LEADS TO BE SEPARATED BY AT LEAST 12" IN TRENCH, LENGTHS SHOULD NOT EXCEED MANUFACTURER'S RECOMMENDATION.

TOP OF FOUNDATION TO BE AT SAME ELEVATION AS THE SURFACE OF THE TRAVELED WAY & NO MORE THAN 4" ABOVE THE SURFACE OF THE GROUND.

ALL BUNGALOW WIRING TO BE #16 AWG FLEX UNLESS OTHERWISE SPECIFIED EXCEPT ALL GROUND WIRE TO BE #6 AWG FLEX OR LARGER.

ALL WIRING IN GATE MECHANISM TO BE #10 "AWG FLEX".

REFER TO UP STANDARD DWG FOR BUNGALOW GROUNDING.

PORTABLE GENERATOR EXTENSION CORD FOR 240V TO 240V IS PROVIDED AS WELL AS A 120V TO 240V ADAPTER.

ALL LIGHTS TO BE 12" ROUNDELS.

= = = = = = 4" X 40' CONDUIT

LIGHTS: LED LIGHTS

GATE A: 17'
GATE B: 17'

×× = BELL

CRTU MICROBURST

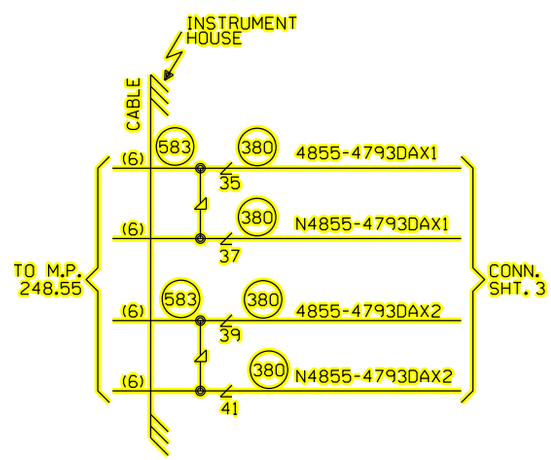

W(S) ← → E(N)

CABLE TABULATION

CABLE #6 7C#14 U.G.B.T. HOUSE TO M.P. 248.55

○ = EXISTING/REVISE ORIGINALS IF A.C.'D

—— = IN
×—— = OUT

BRIGHTON, ILLINOIS
TERPENING ROAD
M.P. 247.93
SPRINGFIELD SUBDIVISION
D.O.T.#294 422E

STAGE 1
Designed: 03/10/16

TIER IS PHASE 1 M.P. 239.70 TO M.P. 255.35 TO UPGRADE XING TO 4 QUAD WITH EGMS, VARIOUS C.P.'S
Rec#: WO#: 10804
IS: NBT / / NST/MJF

Revised: 10-28-09
INSTALLED FLS/GATES AND CONSTANT WARNING AT TERPENING ROAD M.P. 247.93
Rec#: 16335 WO#: 87398
IS: 7-23-09 /CJB
JR/WIT/CTC/JJF

MODIFICATION LEVEL	
O. A. LAST LEVEL CHECKED	DQ
LAST LEVEL MOD THIS TYPICAL	DQ
LAST LEVEL BY DESIGNER	DQ
CHANGED FROM TYPICAL?	Y

REV 02.01.08 4K 1TKBG.1

CIRCUIT MODIFICATIONS ARE NOT TO BE MADE WITHOUT AUTHORITY FROM THE OFFICE OF SIGNAL DESIGN

DES: CTC
DIG: CTC
CHK: JTB
A.F.E. 87398
ID= CSL24793.1X

UNION PACIFIC RAILROAD
BLOOMINGTON YARD, ILLINOIS
TO VALLEY JCT., ILLINOIS
C.T.C. CIRCUITS
Office of Sr AVP Engineering - Signal/TCO Omaha, Nebraska

DATE 03-07-08
SHEET 1
DWG 247.93
RTE CSL

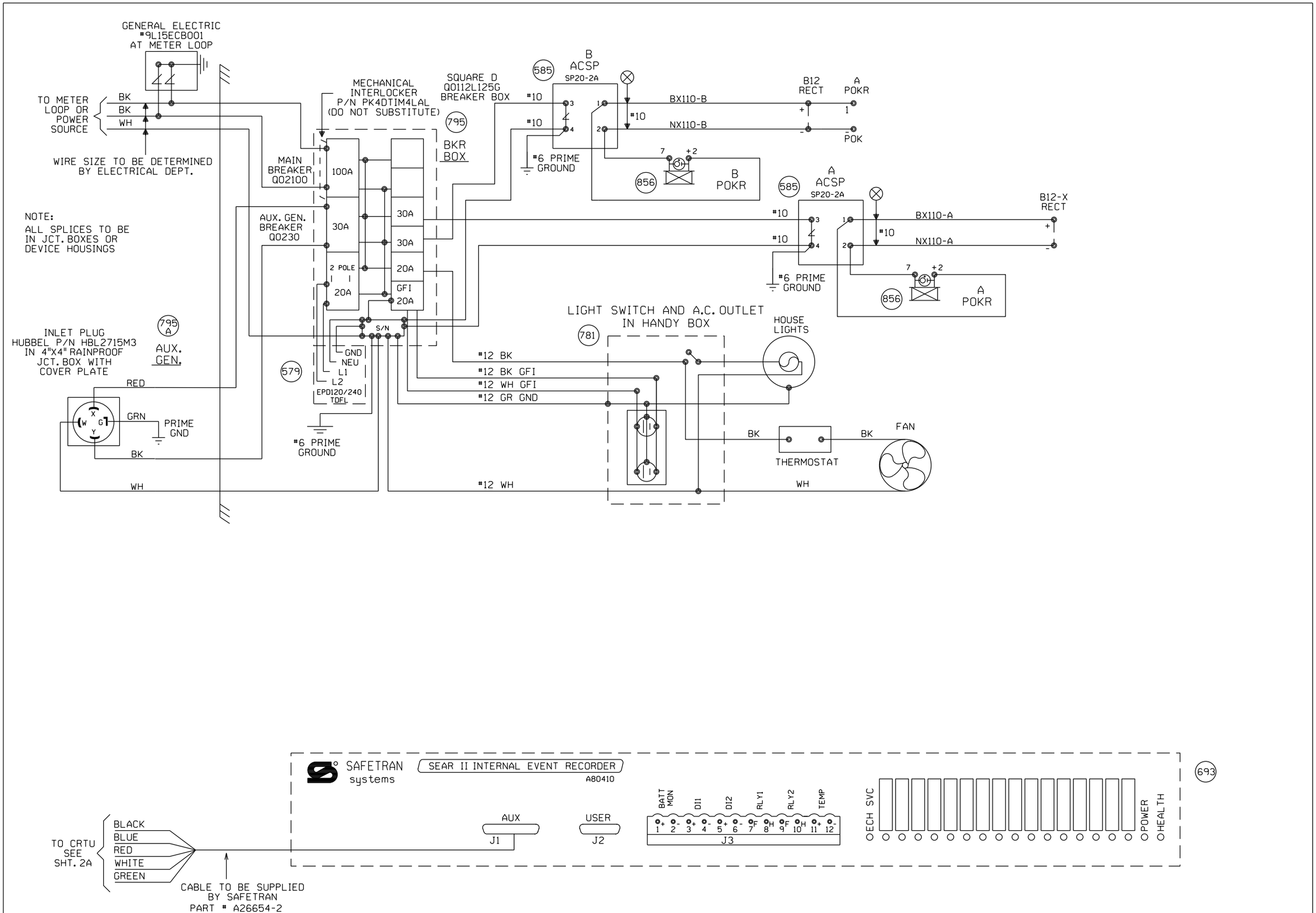

BRIGHTON, ILLINOIS
TERPENING ROAD
M.P. 247.93
SPRINGFIELD SUBDIVISION
D.O.T.#294 422E

Revised: 10-28-09
INSTALLED FLS/GATES AND CONSTANT WARNING AT TERPENING ROAD M.P. 247.93
Rec#: 16335 WO#: 87398
IS: 7-23-09 /CJB
JR/WIT/CTC/JJF

MODIFICATION LEVEL	
D.A. LAST LEVEL CHECKED	DQ
LAST LEVEL MOD THIS TYPICAL	DQ
LAST LEVEL BY DESIGNER	DQ
CHANGED FROM TYPICAL?	Y

REV 02.01.08 4K SEARAC.2

CIRCUIT MODIFICATIONS ARE NOT TO BE MADE WITHOUT AUTHORITY FROM THE OFFICE OF SIGNAL DESIGN

DES: CTC
DIG: CTC
CHK: CJB
A.F.E. 87398
ID= CSL24793.2X

UNION PACIFIC RAILROAD

BLOOMINGTON YARD, ILLINOIS
TO VALLEY JCT., ILLINOIS
C.T.C. CIRCUITS

Office of Sr AVP Engineering - Signal/TCO Omaha, Nebraska

DATE 03-07-08
SHEET 2
DWG 247.93
RTE CSL

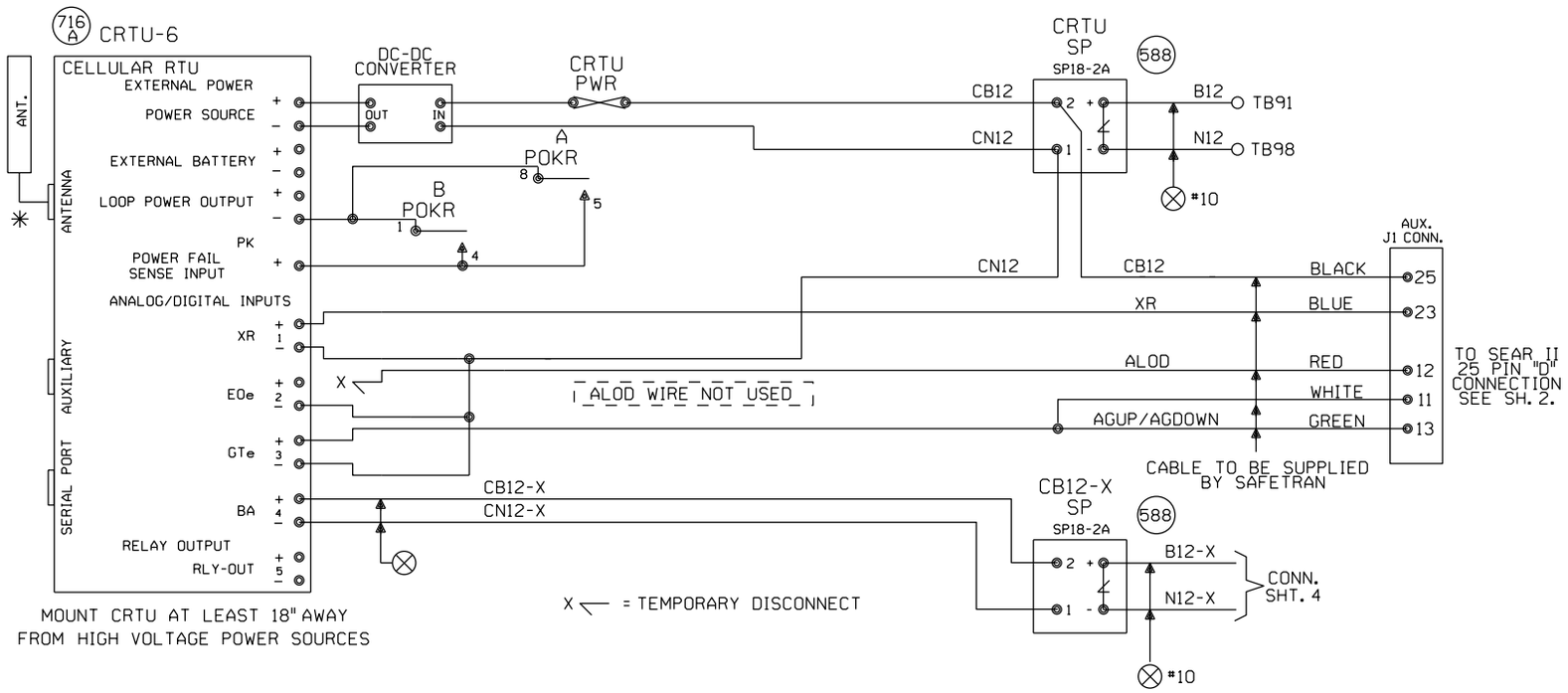

NOTES:

ALL DIODES 1N5060 OR 1N4004 UNLESS OTHERWISE NOTED.

✳ MOUNT ANTENNA ON TOP OF HOUSE.
INSTALL ANTENNA CABLE AND CHOKE PER TECH BULLENTIN #99-0015-00

ALL WIRES #18 UNLESS OTHERWISE NOTED.

ALL UNUSED 'NC' INPUTS MUST BE TIED HIGH TO BATTERY

ALL UNUSED ANALOG INPUTS MUST BE TIED HIGH TO BATTERY

ALL UNUSED 'NO' INPUTS MUST BE DISCONNECTED

NORMAL STATE FOR ANALOG CHANNELS IS EQUAL TO THE STORED NOMINAL VOLTAGE +120% OR -81%

CRTU FRONT PANEL DISPLAY CHART INDICATES NORMAL STATE

DIGITAL INPUT HIGH, OR POWER FAIL INPUT CLOSED — DIGITAL INPUT LOW, OR POWER FAIL INPUT OPEN

L — LATCH IS SET BECAUSE CRTU DETECTED AN ALARM CONDITION
12.06V L

'sRUN MODE' — 'sRUN MODE-SILENT'
CRTU RADIO IS DISABLED. REPROGRAM CRTU WITH LAPTOP.

ANALOG AND AC INPUT MODULES AND SURGE PROTECTORS MUST BE MOUNTED LESS THAN 18" FROM CRTU

ANALOG MODULES CONVERT DC VOLTAGE TO A SQUARE WAVE. A WORKING ANALOG MODULE WILL HAVE 4.5VDC TO 8.0VDC BETWEEN 5VOUT+ AND 6VOUT-. WHERE, 0VOLTS = 0HZ OUT, 30VOLTS = 10KHZ OUT, AND 15VOLTS = 5KHZ OUT
MAKE SURE CRTU IS PROGRAMMED WITH CALIBRATION SETTINGS.

CRTU CH4 CAN BE CONNECTED TO EITHER SP18 OR EQUIPMENT SIDE OF MDSA1, TAB 565

UNIT INSTALLATION AND SETUP

R.R. SITE ID WHERE; SSSS = 4 CHARACTER SUBDIVISION ID. FILL WITH PRECEDING ZEROS AS REQUIRED. THE MAIN TRACK SUBDIVISION ID# IS IN THE CURRENT TIMETABLE. INDUSTRIAL LEADS, LEASED, AND LEAD TRACKS LISTED WITHIN THE SUBDIVISION MAY HAVE THEIR OWN UNIQUE SUBDIVISION ID#. ALWAYS REFER TO CURRENT PRINTED COPY OF THE TIMETABLE.
LLLLLLLL = 8 CHARACTERS USE DOT# AT CROSSINGS, AND
WDLLLLLL = USE 'WD' THEN MP# AT WAYSIDE LOCATIONS.
EXAMPLE = 0785WD1801.5UT
HBLLLLLL = USE 'HB' THEN MP# AT HBD SITES.
EXAMPLE = 0100-HB55.62TX
THE MP# MUST USE A DECIMAL POINT TO SEPARATE NUMBERS. FILL WITH PRECEDING DASHES AS REQUIRED.
AA = 2 CHARACTER STATE NAME FOR ALL LOCATIONS. MUST BE 14 CHARACTERS LONG, NO SPACES ALLOWED.

SITE IDENTIFIER: SSSSLLLLLLLLAA	0029-294422EIL
OPERATION TO RESUME:	RUN
SIGNAL STRENGTH dBm	
CARRIER ID	
FIRMWARE VERSION	2.3.
SERIAL NUMBER	
BOOT VERSION:	
CMM VERSION:	
MIN ASSIGNMENT	
ESN: (MICROBURST ONLY)	
CONFIGURATION NET	MICROBURST
SILENCE INTERVAL	60 MINUTES
HEALTHCHECK INTERVAL	EVERY 2 DAYS
ALARM DEFER DELAY	240 MINUTES (4 HOURS)
SIGNAL STATUS	
SCADANET STATUS	
CALIBRATION CONSTANT CH1	
CALIBRATION CONSTANT CH2	
CALIBRATION CONSTANT CH3	
CALIBRATION CONSTANT CH4	
CALIBRATION CONSTANT PS	

FIELD PROVIDES: SAMPLED NOMINAL VOLTAGES, SCADANET STATUS CALIBRATION CONSTANTS, SERIAL NUMBER, AND SIGNAL STATUS.

CHANNEL SETUP - STANDARD CONFIGURATION 32:XR,EOe,GTe,Ba

CHANNEL NORMAL STATE	SENSE (NO/NC)	NAME FUNCTION	RECOGNITION DELAY SECONDS ACTIVE	RECOGNITION DELAY SECONDS NORMAL	RETURN TO NORMAL	REPORTING MODE	ALARM LINKED CHANNEL	ALARM LINKED CRITERIA	EVENT LOGGING ENABLED OPTIONS
POWER FAIL (CH5)	POWER FAIL DETECT NO	PF1n-PK AC POWER FAIL	7,200 ALARM	300 NORMAL	ENABLED	ALERT	DISABLED	N/A	ANALOG VALUE SENT
CH1	DIGITAL INPUT NC	CH1-XR XR DOWN TO LONG	1,800 ALARM	1 NORMAL	ENABLED	ALERT	DISABLED	N/A	
CH2	DIGITAL INPUT NO	CH2-EOe LIGHT OUT	120 ALARM	10 NORMAL	ENABLED	ALERT	DISABLED	N/A	
CH3	DIGITAL INPUT NO	CH3-GTe GATES NOT UP/DOWN	120 ALARM	10 NORMAL	ENABLED	ALERT	DISABLED	N/A	DIGITAL EVENTS: PF1n-PK, CH1-XR, CH2-EOe, CH3-GTe
CH4 STORED NOMINAL VOLTAGE	ANALOG INPUT N/A	CH4-Ba/V BATTERY MONITOR BATTERY LOW	600 ALARM	1200 NORMAL	ENABLED	ALERT W/UPDATE	DISABLED	N/A	
POWER SOURCE (CH6)	ANALOG INPUT N/A	PS-Ba/V BATTERY MONITOR BATTERY LOW	600 ALARM	1200 NORMAL	ENABLED	ALERT W/UPDATE	DISABLED	N/A	

ANALOG CHANNEL	USEFUL RANGE VOLTS LOW	USEFUL RANGE VOLTS HIGH	DISPLAYED RANGE VOLTS LOW	DISPLAYED RANGE VOLTS HIGH	RELATIVE ALARM POINT LOW	RELATIVE ALARM POINT HIGH	ABSOLUTE ALARM POINT LOW	ABSOLUTE ALARM POINT HIGH	AUTOMATIC UPDATE INTERVAL	STORED NOMINAL VOLTAGE	SAMPLED NOMINAL VOLTAGE
CH4	0.0	30.00	0.0	30.00	81%	120%	10.0	29.0	14 DAYS	12.69	
POWER SOURCE	0.0	30.00	0.0	30.00	81%	120%	10.0	29.0	14 DAYS	12.69	
RELAY OUTPUT	NAME RLY-OUT		ACTIVE SET-UP-OPEN		NORMAL CLR-DN-CLOSE		PULSE DURATION		15 SECONDS	StdCfg Ver: 2.3.3 REV'D 9-20-02	

MAINTENANCE OPERATIONS

TO START OR ABORT ANY PROCEDURE

1. PRESS THE 'CANCEL' BUTTON FIRST

WHEN RESPONDING TO A CALL, PUT THE CRTU IN THE 'SILENCE ALARMS' MODE

1. PRESS 'SELECT' AND THEN '+ ARROW' BUTTON UNTIL
   DISPLAY: ACTION?
   SILENCE ALARMS
2. PRESS THE 'SELECT' BUTTON TWICE
3. CORRECT PROBLEM AND SIMULATE NORMAL TRAIN MOVEMENT THROUGH THE LOCATION
4. EXAMINE EACH CHANNEL ON THE CRTU
5. PRESS THE '+/- ARROW' BUTTON VERIFY ALL CHANNELS INDICATE A NORMAL STATE NORMAL STATES ARE ON THE CHANNEL SETUP CHART

CLEAR TIMERS, LATCHES AND SEND ALL NORMAL

1. DO STEPS #1 - #5 ABOVE, AND PRESS 'CANCEL'.
2. PRESS 'SELECT' AND THEN '- ARROW' BUTTON UNTIL
   DISPLAY: ACTION?
   SERVICE MODE
3. PRESS 'SELECT' AGAIN TO RESET TIMERS, AND IF
   DISPLAY: SERVICE MODE
   ALL NORMAL
4. PRESS 'SELECT' AGAIN TO CLEAR LATCHES, AND SEND ALL NORMAL. SKIP STEPS #5-#6.
5. HOWEVER, IF ALARMS ARE NOT CLEARED;
   DISPLAY: SERVICE MODE
   ALARMS PENDING/PRESENT
6. PRESS 'CANCEL', CORRECT PROBLEM AND REPEAT STEPS #2 THRU #5 UNTIL ALL NORMAL SENT.

TO CANCEL THE 'SILENCE ALARMS' MODE

1. PRESS 'SELECT' AND THEN '+ ARROW' BUTTON UNTIL
   DISPLAY: ACTION?
   CANCEL SILENCE
2. PRESS THE 'SELECT' BUTTON AGAIN

EXAMINE & SET BATTERY VOLTAGE NOMINAL VALUE

1. PRESS THE '+ ARROW' OR '- ARROW' BUTTON UNTIL THE DESIRED CHANNEL IS DISPLAYED.
   DISPLAY: PS-BA:
   13.83V NORMAL
2. VERIFY THE DISPLAYED READING WITH A DIGITAL VOLTMETER
3. PRESS THE 'SELECT' BUTTON, AND THE CRTU DISPLAY WILL SWITCH BETWEEN CURRENT/SAVED NOMINAL VOLTAGE VALUES.
   DISPLAY: NOMINAL ON #6? (CURRENT)
   13.83
   DISPLAY: SAVED NOMINAL 6 (STORED)
   12.69
4. PRESS THE 'SELECT' BUTTON AND THE CURRENT OR 'NOMINAL ON' VALUE WILL BE SAMPLED AND STORED AS THE 'SAVED NOMINAL' VALUE
5. VERIFY THE 'NOMINAL ON' AND 'SAVED NOMINAL' VALUES ARE EQUIVALENT, REPEAT STEPS #1 THRU #3 & PRESS THE 'CANCEL' BUTTON.

BRIGHTON, ILLINOIS
TERPENING ROAD
M.P. 247.93
SPRINGFIELD SUBDIVISION
D.O.T.#294 422E

Revised: 03/22/16
REMOVE CRTU STRAP, VOID OUT OLD PROGRAM AND UPDATE GATE MECHS AT M.P. 247.93 PER FIELD AC
Rec#: 23201 WO#:
IS: 06/16/15 / ACF/NST/ /

Revised: 10-28-09
INSTALLED FLS/GATES AND CONSTANT WARNING AT TERPENING ROAD M.P. 247.93
Rec#: 16335 WO#: 87398
IS: 7-23-09 /CJB JR/WIT/CTC/JJF

MODIFICATION LEVEL	
Q.A. LAST LEVEL CHK'D.	DJ
LAST LEVEL MOD. THIS TYP.	DJ
LAST LEVEL BY DESIGNER.	DQ
CHANGED FROM TYP.? Y/N	Y

CIRCUIT MODIFICATIONS ARE NOT TO BE MADE WITHOUT AUTHORITY FROM THE OFFICE OF SIGNAL DESIGN

DES: CTC
DIG: CTC
CHK: CJB
A.F.E. 87398
ID= CSL24793.2AX

UNION PACIFIC RAILROAD
BLOOMINGTON YARD, ILLINOIS
TO VALLEY JCT., ILLINOIS
C.T.C. CIRCUITS
Office of Sr AVP Engineering - Signal/TCO Omaha, Nebraska

DATE 03-07-08
SHEET 2A
DWG 247.93
RTE CSL

(REV.06.01.04) (CRTUCFG32-2BAT.3)

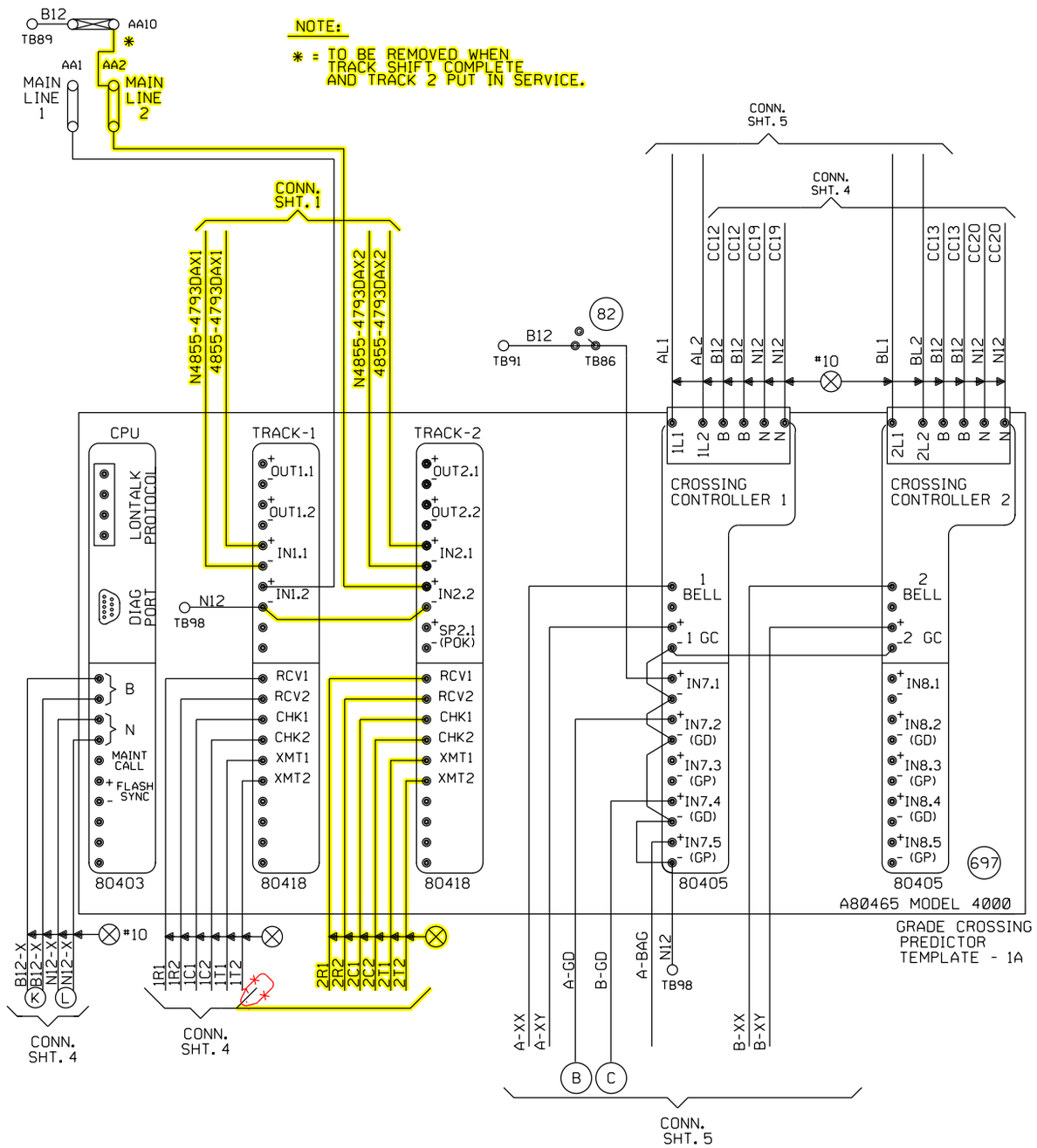

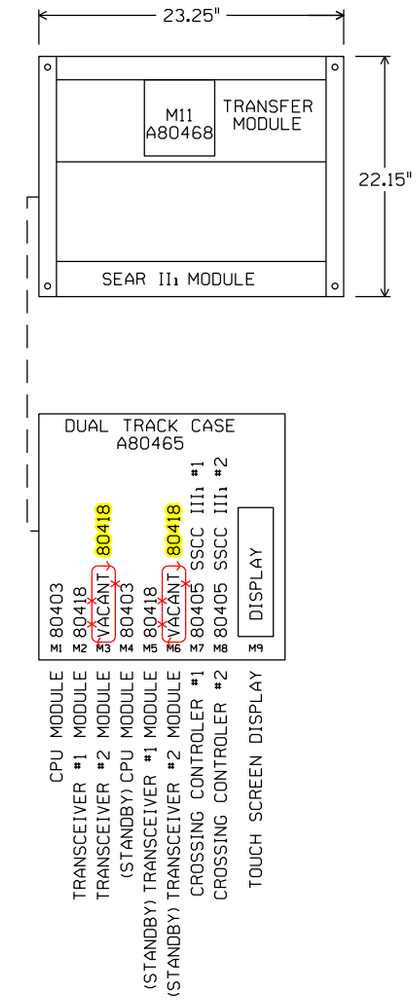

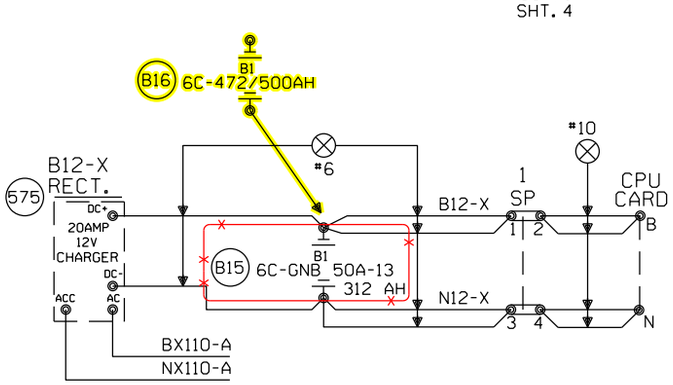

"Mf" FREQUENCY (HZ)	MAXIMUM TRANSMIT WIRE LENGTH (FEET)
86	100
114	125
156	150
211	200
285-970	250

NOTE:
EACH TRANSMITTER TO RAIL WIRE FROM XMT1 AND XMT2 MUST NOT EXCEED THE MAXIMUM LENGTH SPECIFIED IN THE TABLE SHOWN. THE RECEIVER WIRE LENGTH IS NOT CRITICAL. DOES NOT APPLY TO 6 TRACK WIRE APPLICATION.

= IN
= OUT

BRIGHTON, ILLINOIS
TERPENING ROAD
M.P. 247.93
SPRINGFIELD SUBDIVISION
D.O.T.#294 422E

Designed: 03/10/16
TIER 1S PHASE 1 M.P. 239.70 TO M.P. 255.35 TO UPGRADE XING TO 4 QUAD WITH EGMS, VARIOUS C.P.'S
Rec#: WO#: 10804
IS: NBT / / /NST/MJF

Revised: 10-28-09
INSTALLED FLS/GATES AND CONSTANT WARNING AT TERPENING ROAD M.P. 247.93
Rec#: 16335 WO#: 87398
IS: 7-23-09 /CJB
JR/WIT/CTC/JJF

MODIFICATION LEVEL	
D.A. LAST LEVEL CHECKED	DQ
LAST LEVEL MOD THIS TYPICAL	DQ
LAST LEVEL BY DESIGNER	DQ
CHANGED FROM TYPICAL?	Y

REV 02.01.08 4K 2TKGF.3

CIRCUIT MODIFICATIONS ARE NOT TO BE MADE WITHOUT AUTHORITY FROM THE OFFICE OF SIGNAL DESIGN

DES: CTC
DIG: CTC
CHK: CJB
A.F.E. 87398
ID= CSL24793.3X

UNION PACIFIC RAILROAD
BLOOMINGTON YARD, ILLINOIS
TO VALLEY JCT., ILLINOIS
C.T.C. CIRCUITS
Office of Sr AVP Engineering - Signal/TCO Omaha, Nebraska

DATE 03-07-08
SHEET 3
DWG 247.93
RTE CSL

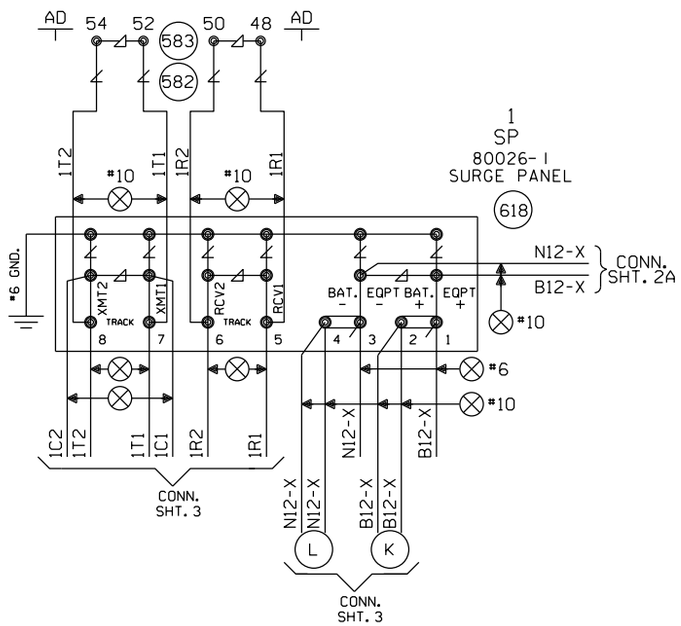

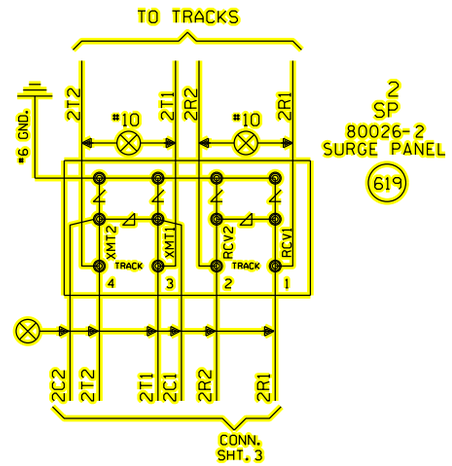

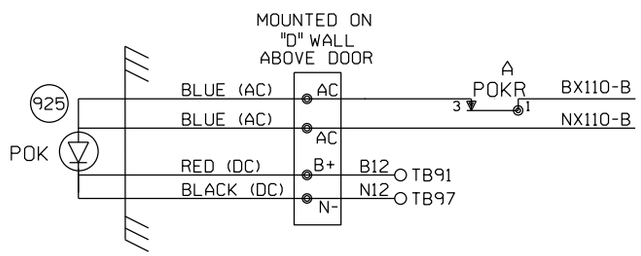

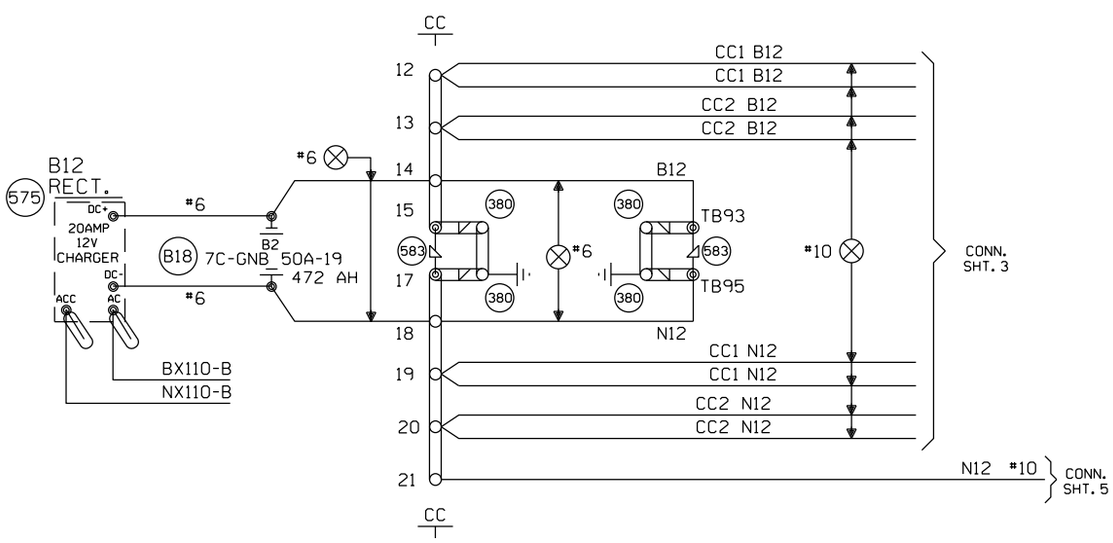

○ = EXISTING/REVISE ORIGINALS IF A.C.'D

——— = IN

BRIGHTON, ILLINOIS
TERPENING ROAD
M.P. 247.93
SPRINGFIELD SUBDIVISION
D.O.T.#294 422E

Designed: 03/10/16	Revised: 10-28-09	MODIFICATION LEVEL	
TIER 1S PHASE 1 M.P. 239.70 TO M.P. 255.35 TO UPGRADE XING TO 4 QUAD WITH EGMS, VARIOUS C.P.'S	INSTALLED FLS/GATES AND CONSTANT WARNING AT TERPENING ROAD M.P. 247.93	O. A. LAST LEVEL CHECKED	DQ
Rec#: WO#: 10804	Rec#: 16335 WO#: 87398	LAST LEVEL MOD THIS TYPICAL	DQ
IS: NBT / / / NST/MJF	IS: 7-23-09 /CJB JR/WIT/CTC/JJF	LAST LEVEL BY DESIGNER	DQ
		CHANGED FROM TYPICAL?	Y
		REV 02.01.08 4K 4TKSPGFC.4	

CIRCUIT MODIFICATIONS ARE NOT TO BE MADE WITHOUT AUTHORITY FROM THE OFFICE OF SIGNAL DESIGN

DES: CTC
DIG: CTC
CHK: CJB
A.F.E. 87398
ID= CSL24793.4X

UNION PACIFIC RAILROAD

BLOOMINGTON YARD, ILLINOIS
TO VALLEY JCT., ILLINOIS
C.T.C. CIRCUITS

Office of Sr AVP Engineering - Signal/TCO Omaha, Nebraska

DATE 03-07-08
SHEET 4
DWG 247.93
RTE CSL

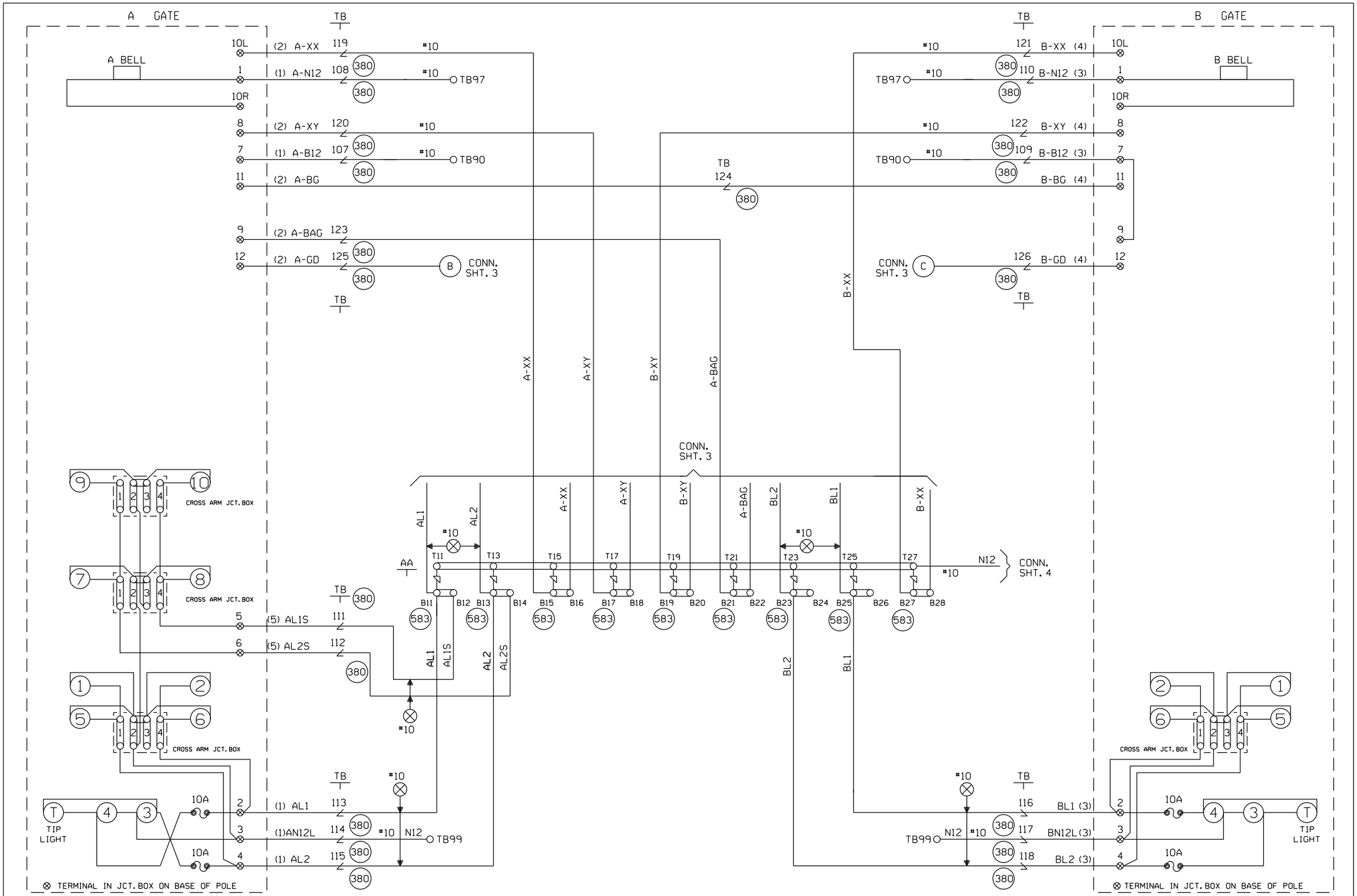

CABLE TABULATION

CABLE NO. 1 5C. NO.6 U.G.B.T.
CABLE NO. 2 7C. NO.14 U.G.B.T.
CABLE NO. 3 5C. NO.6 U.G.B.T.
CABLE NO. 4 7C. NO.14 U.G.B.T.
CABLE NO. 5 2C. NO.6 U.G.B.T.

BRIGHTON, ILLINOIS
TERPENING ROAD
M.P. 247.93
SPRINGFIELD SUBDIVISION
D.O.T.#294 422E

Revised: 10-28-09
INSTALLED FLS/GATES AND CONSTANT WARNING AT TERPENING ROAD M.P. 247.93

Rec#: 16335 WO#: 87398
IS: 7-23-09 /CJB
JR/WIT/CTC/JJF

MODIFICATION LEVEL	
Q.A. LAST LEVEL CHECKED	DQ
LAST LEVEL MOD THIS TYPICAL	DQ
LAST LEVEL BY DESIGNER	DQ
CHANGED FROM TYPICAL?	Y

Rev 02.01.08 4K GFSLTYP.5

CIRCUIT MODIFICATIONS ARE NOT TO BE MADE WITHOUT AUTHORITY FROM THE OFFICE OF SIGNAL DESIGN

DES: CTC
DIG: CTC
CHK: CJB
A.F.E. 87398
ID= CSL24793.5X

UNION PACIFIC RAILROAD

BLOOMINGTON YARD, ILLINOIS
TO VALLEY JCT., ILLINOIS
C.T.C. CIRCUITS

Office of Sr AVP Engineering - Signal/TCO Omaha, Nebraska

DATE 03-07-08
SHEET 5
DWG 247.93
RTE CSL

WCH 3597

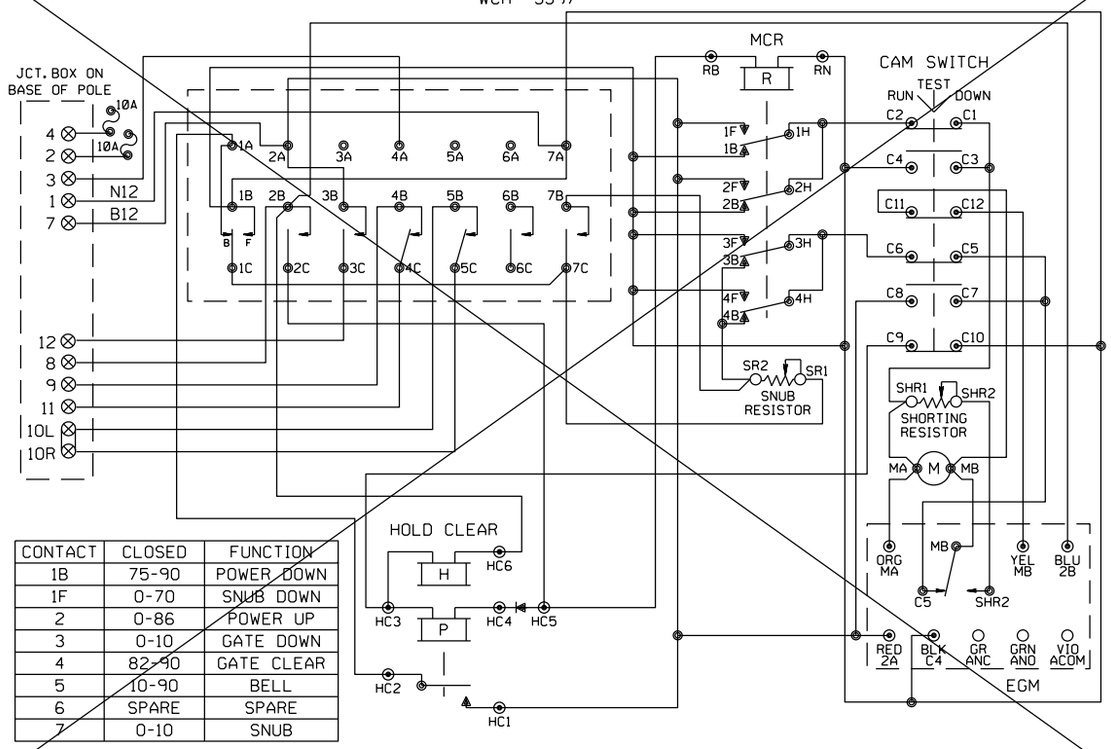

CONTACT	CLOSED	FUNCTION
1B	75-90	POWER DOWN
1F	0-70	SNUB DOWN
2	0-86	POWER UP
3	0-10	GATE DOWN
4	82-90	GATE CLEAR
5	10-90	BELL
6	SPARE	SPARE
7	0-10	SNUB

WCH 3597-RB

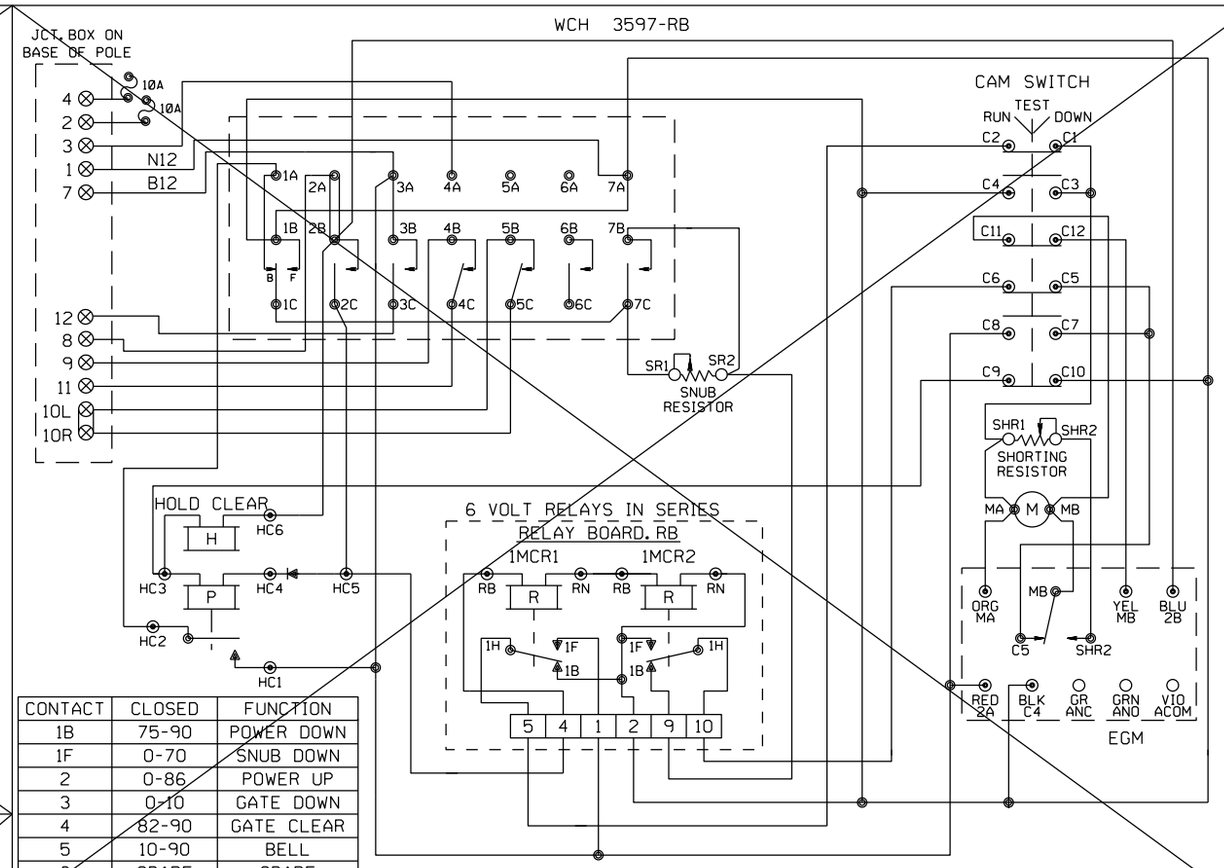

CONTACT	CLOSED	FUNCTION
1B	75-90	POWER DOWN
1F	0-70	SNUB DOWN
2	0-86	POWER UP
3	0-10	GATE DOWN
4	82-90	GATE CLEAR
5	10-90	BELL
6	SPARE	SPARE
7	0-10	SNUB

WCH 3593-E

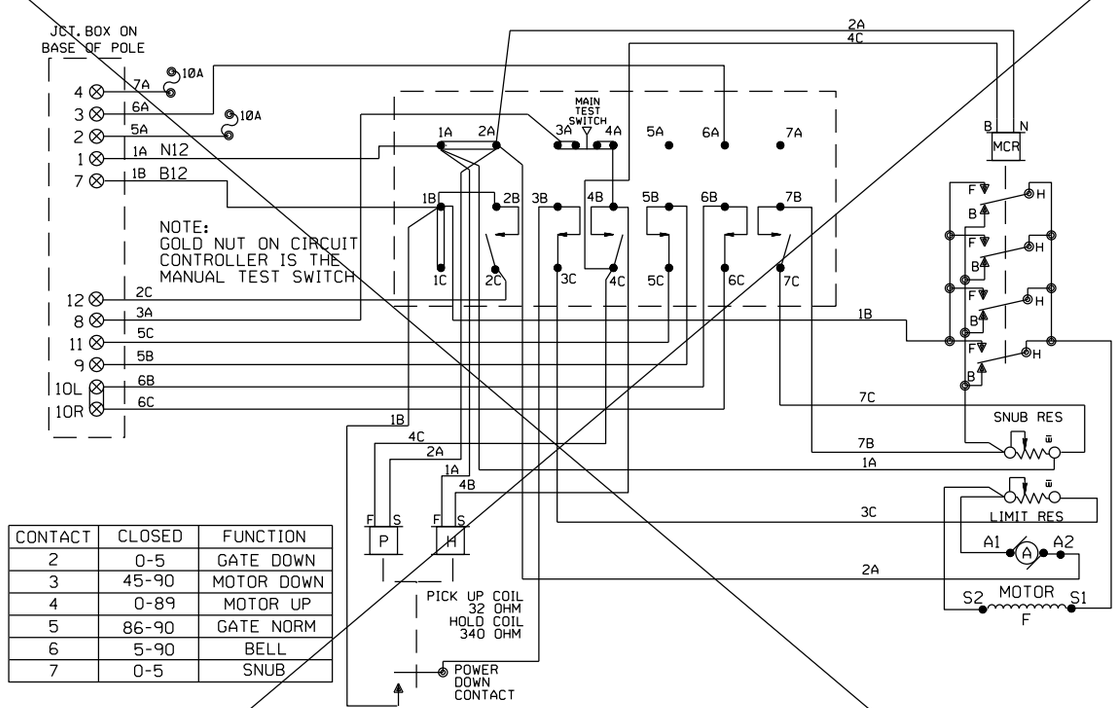

CONTACT	CLOSED	FUNCTION
2	0-5	GATE DOWN
3	45-90	MOTOR DOWN
4	0-89	MOTOR UP
5	86-90	GATE NORM
6	5-90	BELL
7	0-5	SNUB

WCH 3597-E

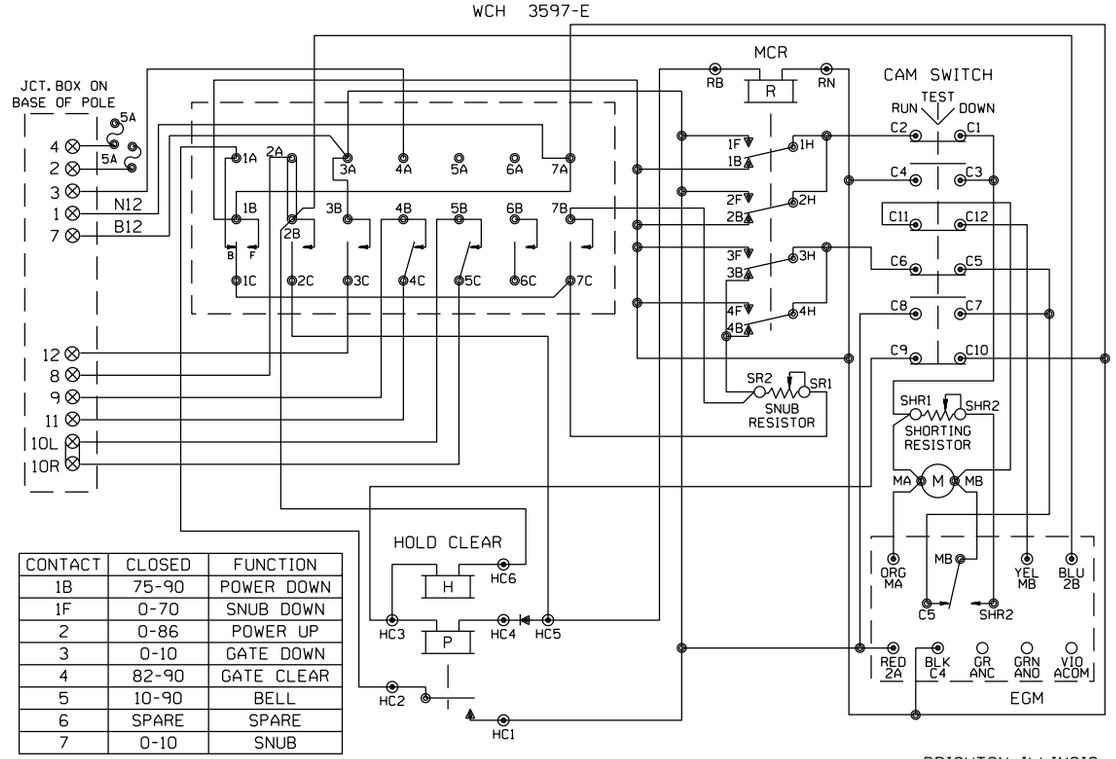

CONTACT	CLOSED	FUNCTION
1B	75-90	POWER DOWN
1F	0-70	SNUB DOWN
2	0-86	POWER UP
3	0-10	GATE DOWN
4	82-90	GATE CLEAR
5	10-90	BELL
6	SPARE	SPARE
7	0-10	SNUB

SHOW TYPE MECH. INSTALLED

ALL MECHANISMS SHOWN IN THE CLEAR POSITION

JCT. BOX ON BASE POLE

L	R	L	R
1		7	
2		8	
3		9	
4		10	
5		11	
6		12	

BRIGHTON, ILLINOIS
TERPENING ROAD
M.P. 247.93
SPRINGFIELD SUBDIVISION
D.O.T.#294 422E

Revised: 03/22/16
REMOVE CRTU STRAP, VOID OUT OLD PROGRAM AND UPDATE GATE MECHS AT M.P. 247.93 PER FIELD AC
Rec#: 23201 WO#:
IS: 06/16/15 /
ACF/NST/ /

Revised: 10-28-09
INSTALLED FLS/GATES AND CONSTANT WARNING AT TERPENING ROAD M.P. 247.93
Rec#: 16335 WO#: 87398
IS: 7-23-09 /CJB
JR/WIT/CTC/JJF

MODIFICATION LEVEL	
D.A. LAST LEVEL CHECKED	DQ
LAST LEVEL MOD THIS TYPICAL	DQ
LAST LEVEL BY DESIGNER	DQ
CHANGED FROM TYPICAL?	N

REV 02.01.08 4K GWIRING.DGN

CIRCUIT MODIFICATIONS ARE NOT TO BE MADE WITHOUT AUTHORITY FROM THE OFFICE OF SIGNAL DESIGN

DES: CTC
DIG: CTC
CHK: CJB
A.F.E. 87398
ID= CSL24793.6X

UNION PACIFIC RAILROAD

BLOOMINGTON YARD, ILLINOIS
TO VALLEY JCT., ILLINOIS
C.T.C. CIRCUITS

Office of Sr AVP Engineering - Signal/TCO Omaha, Nebraska

DATE 03-07-08
SHEET 6
DWG 247.93
RTE CSL

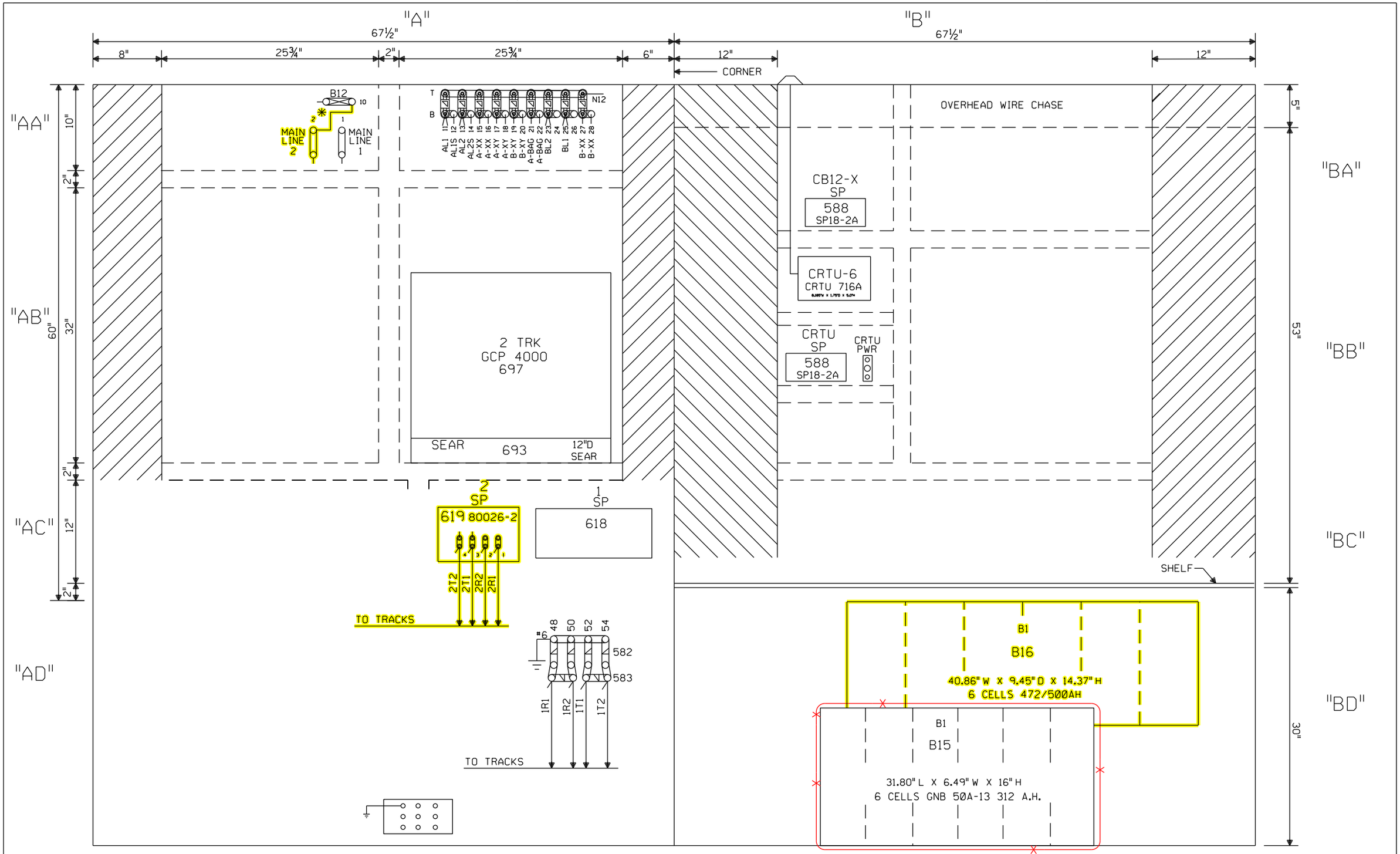

NOTE: ALL DIMENSIONS SHOWN ARE APPROXIMATE.

0 1 2 3 4 FEET

SCALE: 1.5 INCHES = 1 FOOT

* = STRAP TO BE REMOVED WHEN TRACK SHIFT IS COMPLETED AND TRACK 2 PUT IN SERVICE.

= IN
= OUT

BRIGHTON, ILLINOIS
TERPENING ROAD
M.P. 247.93
SPRINGFIELD SUBDIVISION
D.O.T.#294 422E

Designed: 03/10/16
TIER 1S PHASE 1 M.P. 239.70 TO M.P. 255.35 TO UPGRADE XING TO 4 QUAD WITH EGMS, VARIOUS C.P.'S
Rec*: WO*: 10804
IS: NBT/ /NST/MJF

Revised: 10-28-09
INSTALLED FLS/GATES AND CONSTANT WARNING AT TERPENING ROAD M.P. 247.93
Rec*: 16335 WO*: 87398
IS: 7-23-09 /CJB
JR/WIT/CTC/JJF

MODIFICATION LEVEL	
O. A. LAST LEVEL CHECKED	DQ
LAST LEVEL MOD THIS TYPICAL	DQ
LAST LEVEL BY DESIGNER	DQ
CHANGED FROM TYPICAL?	Y

REV 02.01.08 4K 4TKGFC.8

CIRCUIT MODIFICATIONS ARE NOT TO BE MADE WITHOUT AUTHORITY FROM THE OFFICE OF SIGNAL DESIGN

DES: CTC
DIG: CTC
CHK: CJB
A.F.E. 87398
ID= CSL24793.7X

UNION PACIFIC RAILROAD

BLOOMINGTON YARD, ILLINOIS
TO VALLEY JCT., ILLINOIS
C.T.C. CIRCUITS

Office of Sr AVP Engineering - Signal/TCO Omaha, Nebraska

DATE 03-07-08
SHEET 7
DWG 247.93
RTE CSL

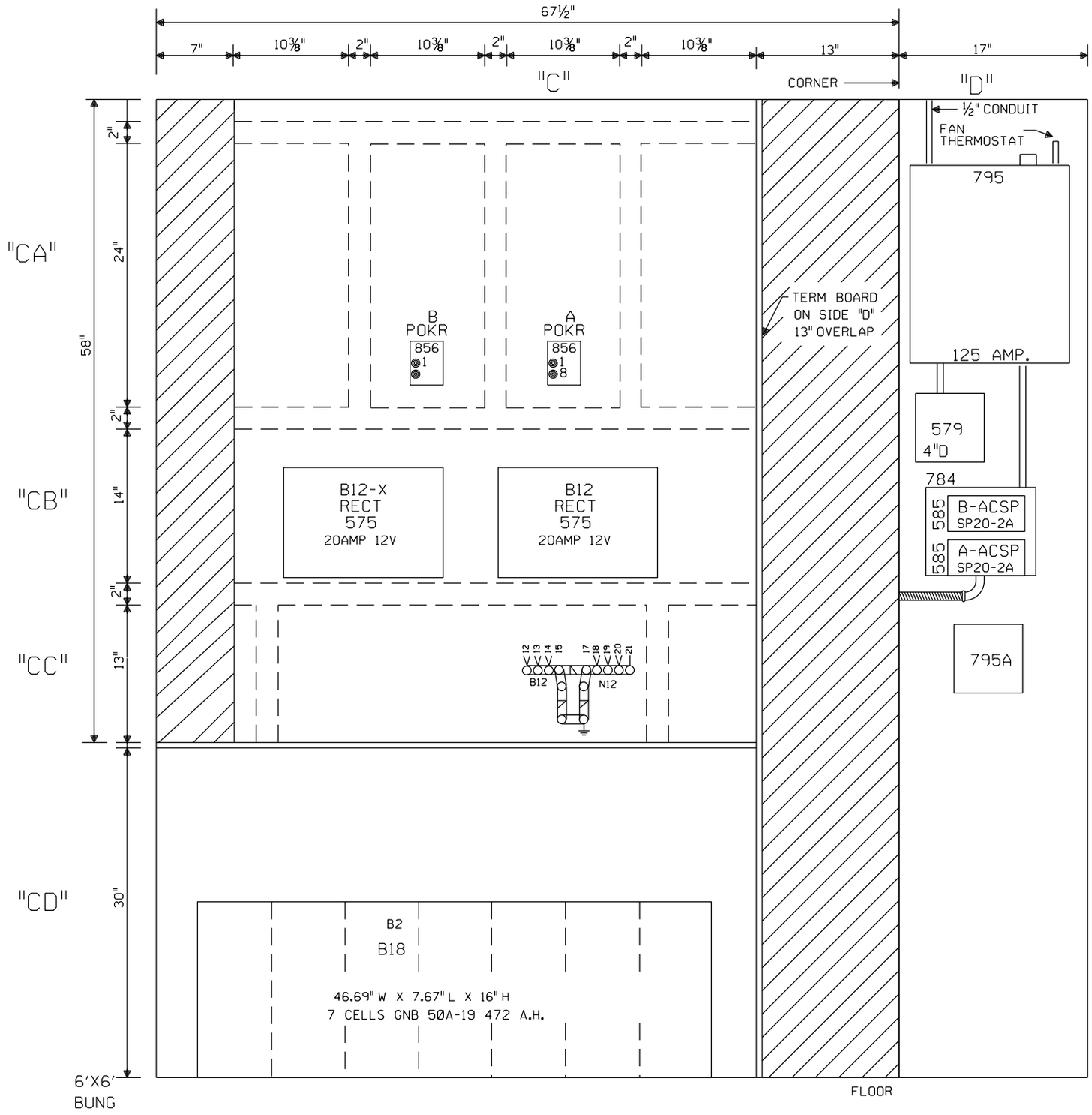

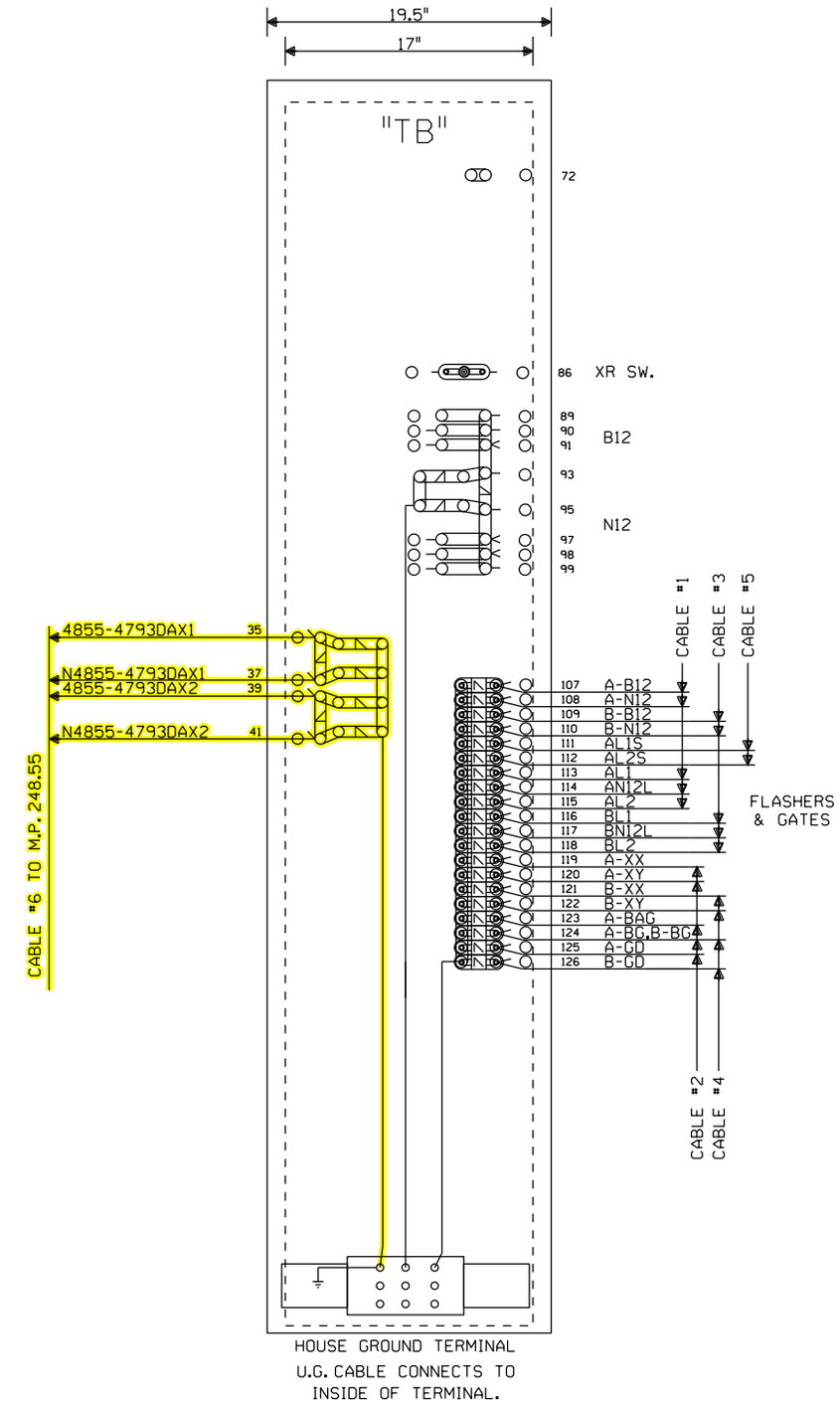

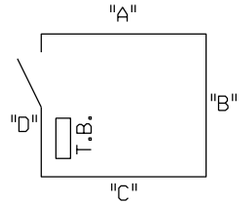

NOTE: ALL DIMENSIONS SHOWN ARE APPROXIMATE.

0 1 2 3 4 FEET

SCALE: 1.5 INCHES = 1 FOOT

= IN

BRIGHTON, ILLINOIS
TERPENING ROAD
M.P. 247.93
SPRINGFIELD SUBDIVISION
D.O.T.#294 422E

Designed: 03/10/16

TIER IS PHASE 1 M.P. 239.70 TO M.P. 255.35 TO UPGRADE XING TO 4 QUAD WITH EGMS, VARIOUS C.P.'S

Rec#: WO#: 10804
IS: NBT / / /NST/MJF

Revised: 10-28-09

INSTALLED FLS/GATES AND CONSTANT WARNING AT TERPENING ROAD M.P. 247.93

Rec#: 16335 WO#: 87398
IS: 7-23-09 /CJB
JR/WIT/CTC/JJF

MODIFICATION LEVEL	
O. A. LAST LEVEL CHECKED	DQ
LAST LEVEL MOD THIS TYPICAL	DQ
LAST LEVEL BY DESIGNER	DQ
CHANGED FROM TYPICAL?	Y

REV 02.01.08 4K GFC.9

CIRCUIT MODIFICATIONS ARE NOT TO BE MADE WITHOUT AUTHORITY FROM THE OFFICE OF SIGNAL DESIGN

DES: CTC
DIG: CTC
CHK: CJB
A.F.E. 87398
ID= CSL24793.8X

UNION PACIFIC RAILROAD

BLOOMINGTON YARD, ILLINOIS
TO VALLEY JCT., ILLINOIS
C.T.C. CIRCUITS

Office of Sr AVP Engineering - Signal/TCO Omaha, Nebraska

DATE 03-07-08
SHEET 8
DWG 247.93
RTE CSL

Minimum Program Steps Report

Location and SIN

DOT Number: 294422E
Milepost Number: 247.93
Site Name: Brighton ILL

SIN: 762010010016 *

* Parameter is part of office check number calculation.

MCF and Template Selection

MCF Name: GCP-T6X-02-1.mcf
MCF Revision: 021
MCFCRC: 6076E435
UCN: FFFFFFFF

Template = 1A:6 Trk Bi *

* Parameter is part of office check number calculation.

Minimum Program Steps

BASIC: module configuration
Track 2/RIO 1 Slot = Track *

GCP: track 1
Track 1 : GCP Frequency = 211 Hz *
Track 1 : Approach Distance = 3709 ft *
Track 1 : Island Distance = 121 ft *
Track 1 : Computed Distance = 3657 ft *
Track 1 : Linearization Steps = 101 *

GCP: track 1 enhanced det
Track 1 : Inbound PS Sensitivity = Medium *

GCP: track 1 prime
Track 1 : Prime Warning Time = 27 sec *
Track 1 : Prime UAX = IP *
Track 1 : Prime UAX Pickup = 15 sec *

GCP: track 2
Track 2 : GCP Frequency = 211 Hz *
Track 2 : Approach Distance = 3709 ft *
Track 2 : Island Distance = 121 ft *

GCP: track 2 prime
Track 2 : Prime Warning Time = 27 sec *
Track 2 : Prime UAX = IP *
Track 2 : Prime UAX Pickup = 15 sec *

ISLAND: track 1
Track 1 : Isl Frequency = 13.2 kHz *
Track 1 : Pickup Delay (2s +) = 2 sec *

ISLAND: track 2
Track 2 : Isl Frequency = 15.2 kHz *
Track 2 : Pickup Delay (2s +) = 2 sec *

AND: AND 1 XR
AND 1 Enable Used = Yes *

ADVANCED: out of service
OOS Control = OOS IPs *
OOS Timeout = No (Hidden) *
OOS Timeout = 23 hrs (Hidden) *

SSCC
Bell On Gate Rising = Yes *

INPUT: assignment page 1
IN 1.1 = T1 Prime UAX *
IN 1.2 = Out Of Service IP 1 *
IN 2.1 = T2 Prime UAX *
IN 2.2 = Out Of Service IP 2 *

IO: assignment SSCC
IN 7.1 = AND 1 XR Enable *

* Parameter is part of office check number calculation.

Check Numbers

Office Check No. (DT 4.6.0): 02A37BBD
Office Check Number: 02A37BBD
Config. Check Number: 43E82226
(Based on MCF Revision 021)

Parameters not part of office check number calculation:

Comments

<none>

Configuration Package File

Filename: CSL24793_294422E.pac
Path: H:\UP\Springfield Sub Tier 1 Ph. 1 11-419-1\PAC Files\MP 247.93 (Stage 1)\
Date/Time: 5/16/2016 12:07:48
DT Version: 5.7.3