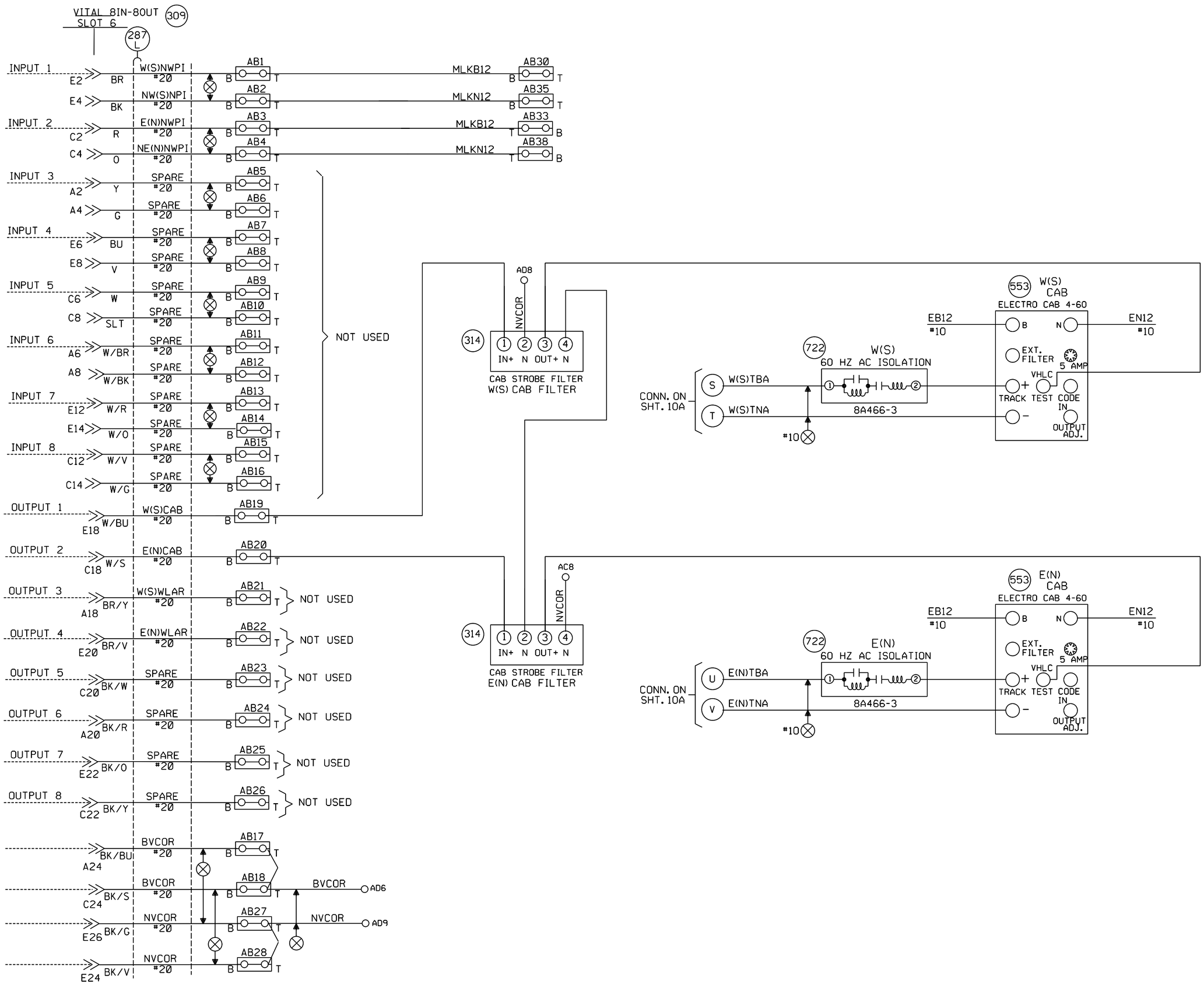

					Revised: 3/30/15 INSTALLED ACS AND UPGRADED THE XINGS FROM M.P. 90-95 WITH QUAD GATES AND EGMS. Rec#: 20776 WO#: 05751 IS: 2/3/14 MWK JH/WIT/WIT/MJF	MODIFICATION LEVEL Q. A. LAST LEVEL CHECKED DQ LAST LEVEL MOD THIS TYPICAL DQ LAST LEVEL BY DESIGNER DU CHANGED FROM TYPICAL? Y Rev 02/01/08 1TMLREGEN.3UPRR	CIRCUIT MODIFICATIONS ARE NOT TO BE MADE WITHOUT AUTHORITY FROM THE OFFICE OF SIGNAL DESIGN	Date: 01/10/12 Des: WIT Chk: MWK AFE: 05751	UNION PACIFIC RAILROAD PONTIAC, ILLINOIS MADISON STREET JOLIET SUBDIVISION Office of Sr AVP Engineering - Signal/TCO Omaha, Nebraska	Sh.: 10 DOT 290757F MP: 91.97 ID: CSL9197.10S

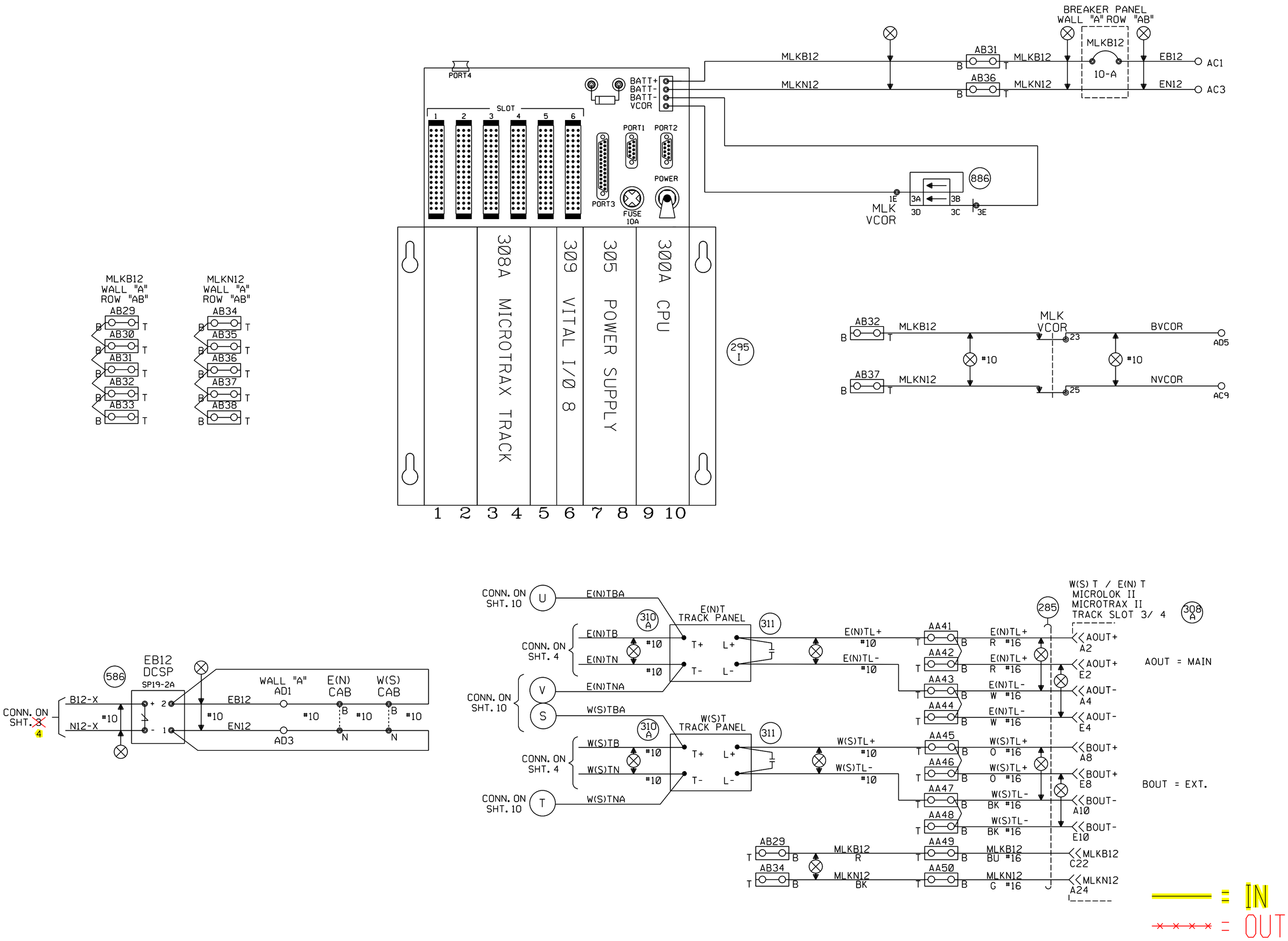

				Designed: 3/25/15 UPGRADE ELECTROLOGIXS AND DESIGN FOR FUTURE FIBER Rec*: WO*: 12780 IS: /NBT / / WIT/JVJ	Revised: 3/30/15 INSTALLED ACS AND UPGRADED THE XINGS FROM M.P. 90-95 WITH QUAD GATES AND EGMS. Rec*: 20776 WO*: 05751 IS: 2/3/14 /MWK JH/WIT/WIT/MJF	MODIFICATION LEVEL Q.A. LAST LEVEL CHECKED DU LAST LEVEL MOD THIS TYPICAL DU LAST LEVEL BY DESIGNER DU CHANGED FROM TYPICAL? N REV 8/20/10 ITMLHBINTU. 4	CIRCUIT MODIFICATIONS ARE NOT TO BE MADE WITHOUT AUTHORITY FROM THE OFFICE OF SIGNAL DESIGN	Date: 01/10/12 Des: WIT Chk: MWK AFE: 05751	UNION PACIFIC RAILROAD PONTIAC, ILLINOIS MADISON STREET JOLIET SUBDIVISION Office of Sr AVP Engineering - Signal/TCO Omaha, Nebraska	Sh.: 10A DOT 290757F MP: 91.97 ID: CSL9197.10AS

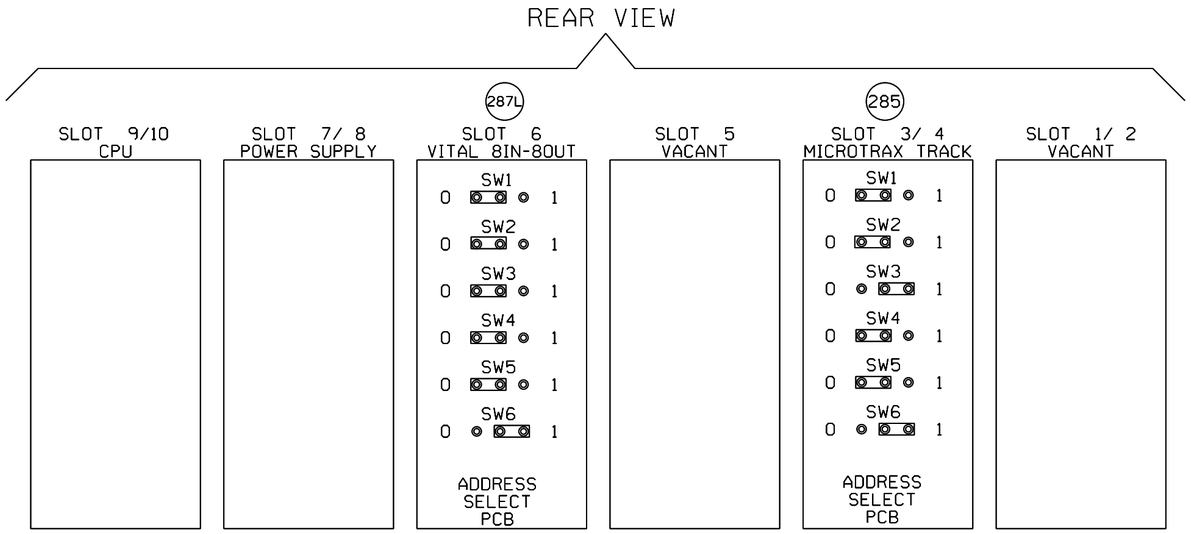

NOTE: FOR PTC COMPATIBLE CPU JUMPER SETTINGS REFER TO ANSALDO MANUAL 1D1.0028 PAGE 1-26 1-27 1-28 REV.1 DATE 8/2009

FOR STANDARD CPU JUMPER SETTINGS REFER TO ANSALDO MANUAL SM-6800B PAGE 2-12, 2-13 REV.2.5 DATE 9/2000

ML8RRH REV B

15 SEC SLOW PICK ET TO PREVENT JOINT HOP	
15 SEC SLOW PICK WT TO PREVENT JOINT HOP	
PROGRAM ID 1 (BINARY 1)	
PROGRAM ID 2 (BINARY 2)	
PROGRAM ID 3 (BINARY 4)	X
PROGRAM ID 4 (BINARY 8)	
PROGRAM ID 5 (BINARY 16)	
PROGRAM ID 6 (BINARY 32)	X
PROGRAM ID 7 (BINARY 64)	
PROGRAM ID 8 (BINARY 128)	
CODE P?	

PLACE AN "X" IN THE BOX FOR DESIRED CONFIGURATION.

Revised: 3/30/15

INSTALLED ACS AND UPGRADED THE XINGS FROM M.P. 90-95 WITH QUAD GATES AND EGMS.

Rec#: 20776 WO#: 05751
IS: 2/3/14 /MWK
JH/WIT/WIT/MJF

MODIFICATION LEVEL	
Q.A. LAST LEVEL CHECKED	DU
LAST LEVEL MOD THIS TYPICAL	DU
LAST LEVEL BY DESIGNER	DU
CHANGED FROM TYPICAL?	Y

REV 8/20/10 1TMLHBINTU.5

CIRCUIT MODIFICATIONS ARE NOT TO BE MADE WITHOUT AUTHORITY FROM THE OFFICE OF SIGNAL DESIGN

Date: 01/10/12
Des: WIT
Chk: MWK
AFE: 05751

UNION PACIFIC RAILROAD

PONTIAC, ILLINOIS
MADISON STREET
JOLIET SUBDIVISION

Office of Sr AVP Engineering - Signal/TCO Omaha, Nebraska

Sh.: 10B
DOT 290757F
MP: 91.97
ID: CSL9197.10BS

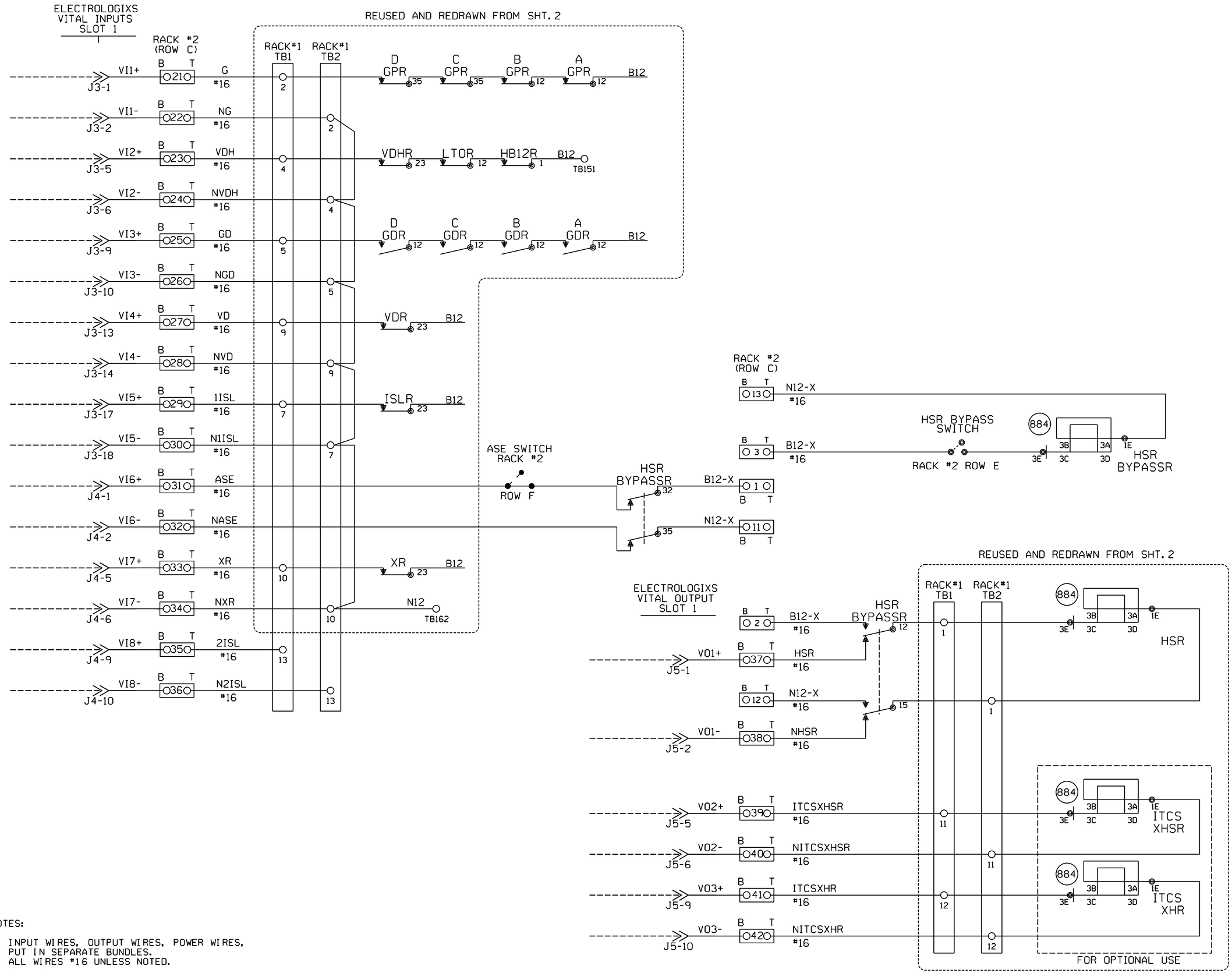

NEW SHEET

NOTES:

1. INPUT WIRES, OUTPUT WIRES, POWER WIRES, PUT IN SEPARATE BUNDLES.
2. ALL WIRES #16 UNLESS NOTED.
3. O?? O 2 POSITION WAGO BLOCK.

Designed: 3/25/15
UPGRADE ELECTROLOGIXS AND DESIGN FOR FUTURE FIBER
Rec*: WO*: 12780
IS: / / WIT/JVJ

CIRCUIT MODIFICATIONS ARE NOT TO BE MADE WITHOUT AUTHORITY FROM THE OFFICE OF SIGNAL DESIGN

DATE: 3/25/15	
DES:	WIT
CHK:	NBT
A.F.E.	12780

UNION PACIFIC RAILROAD

PONTIAC, ILLINOIS
MADISON STREET
JOLIET SUBDIVISION

Office of Sr AVP Engineering - Signal/TCO Omaha, Nebraska

SH.	11
DOT	290757F
M.P.	91.97
ID=	CSL9197.11X

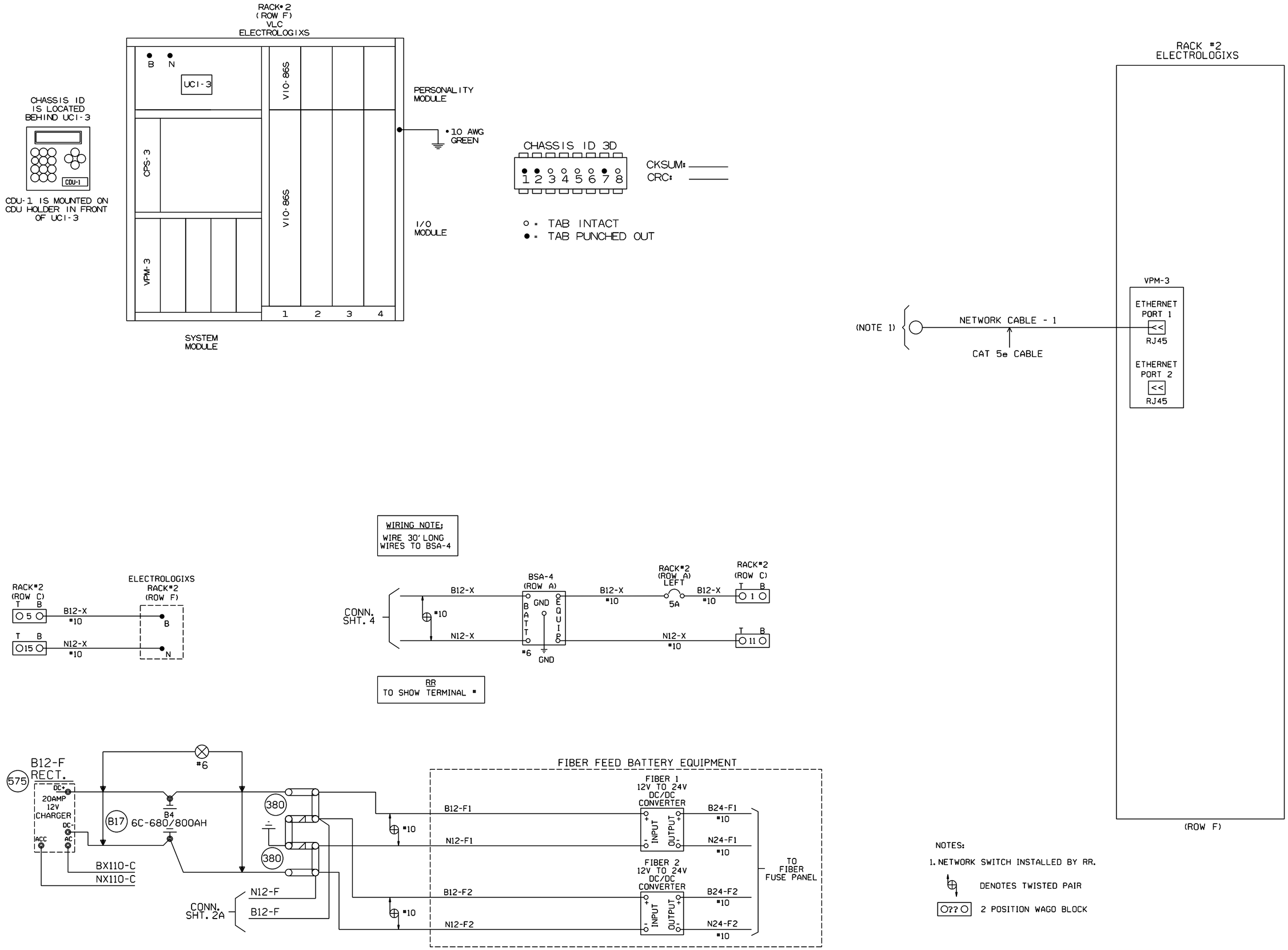

NOTES:

1. NETWORK SWITCH INSTALLED BY RR.

DENOTES TWISTED PAIR

2 POSITION WAGO BLOCK

NEW SHEET

							Designed: 3/25/15 UPGRADE ELECTROLOGIXS AND DESIGN FOR FUTURE FIBER Rec*: /NBT IS: / / WIT/JVJ WO*: 12780	CIRCUIT MODIFICATIONS ARE NOT TO BE MADE WITHOUT AUTHORITY FROM THE OFFICE OF SIGNAL DESIGN	DATE: 3/25/15 DES: WIT CHK: NBT A.F.E. 12780	UNION PACIFIC RAILROAD PONTIAC, ILLINOIS MADISON STREET JOLIET SUBDIVISION Office of Sr AVP Engineering - Signal/TCO Omaha, Nebraska	SH. 11A DOT 290757F M.P. 91.97 ID= CSL9197.11AX

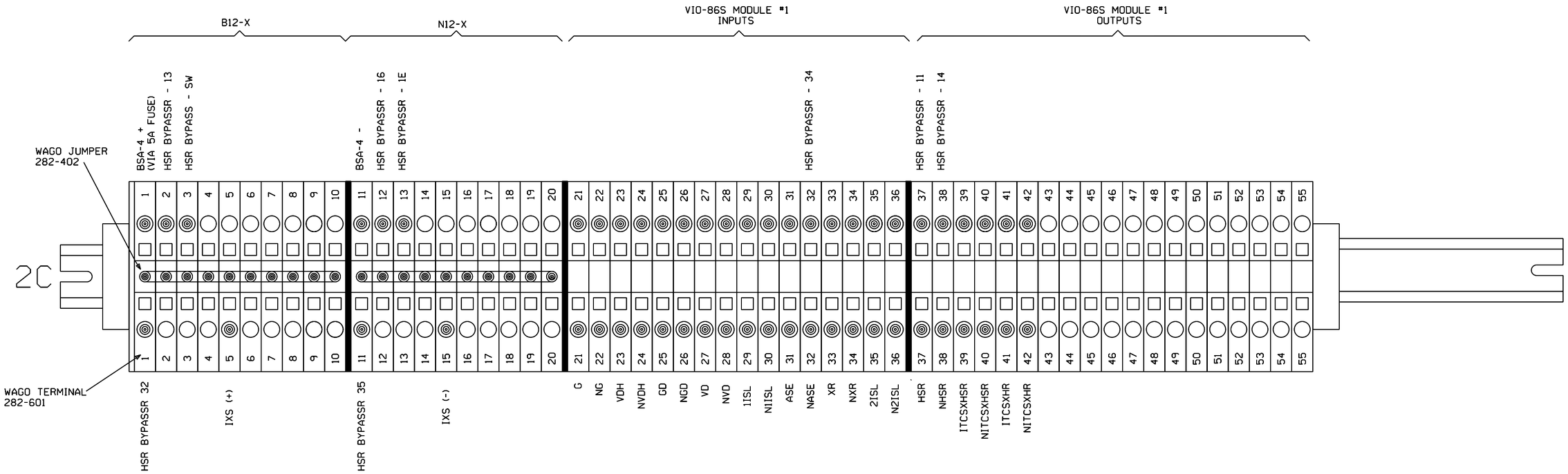

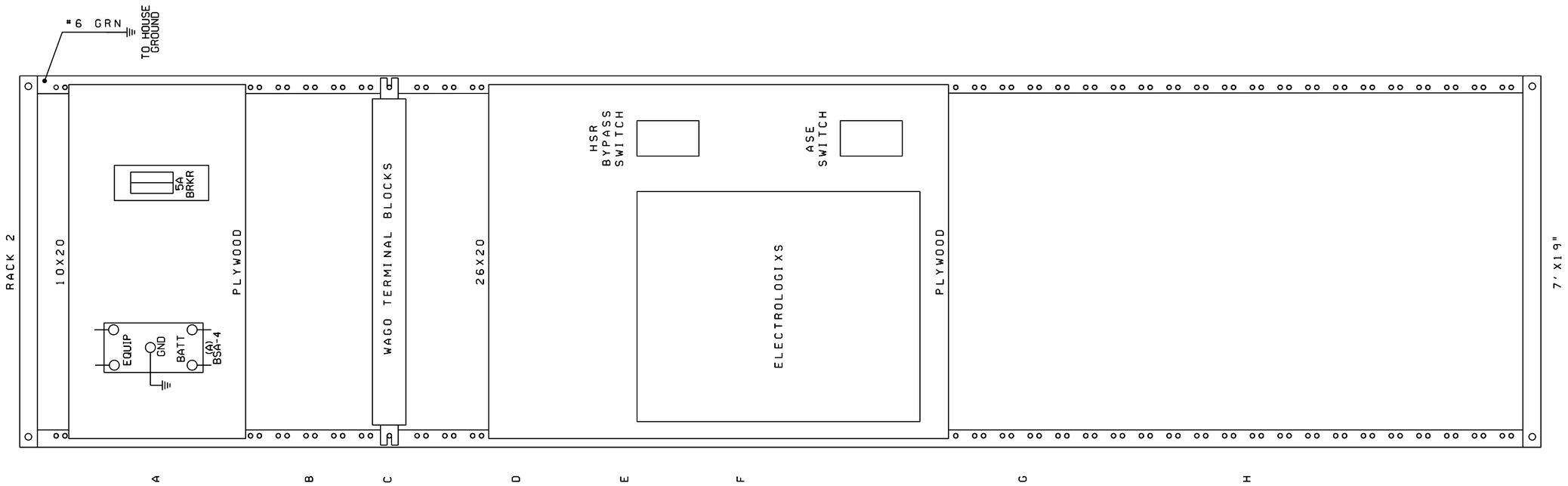

NEW SHEET

Designed: 3/25/15
UPGRADE ELECTROLOGIXS AND DESIGN FOR FUTURE FIBER
Rec*: WO*: 12780
IS: / /NBT / WIT/JVJ

CIRCUIT MODIFICATIONS ARE NOT TO BE MADE WITHOUT AUTHORITY FROM THE OFFICE OF SIGNAL DESIGN

DATE:	3/25/15
DES:	WIT
CHK:	NBT
A.F.E.	12780

UNION PACIFIC RAILROAD

PONTIAC, ILLINOIS
MADISON STREET
JOLIET SUBDIVISION

Office of Sr AVP Engineering - Signal/TCO Omaha, Nebraska

SH.	11B
DOT	290757F
M.P.	91.97
ID=	CSL9197.11BX

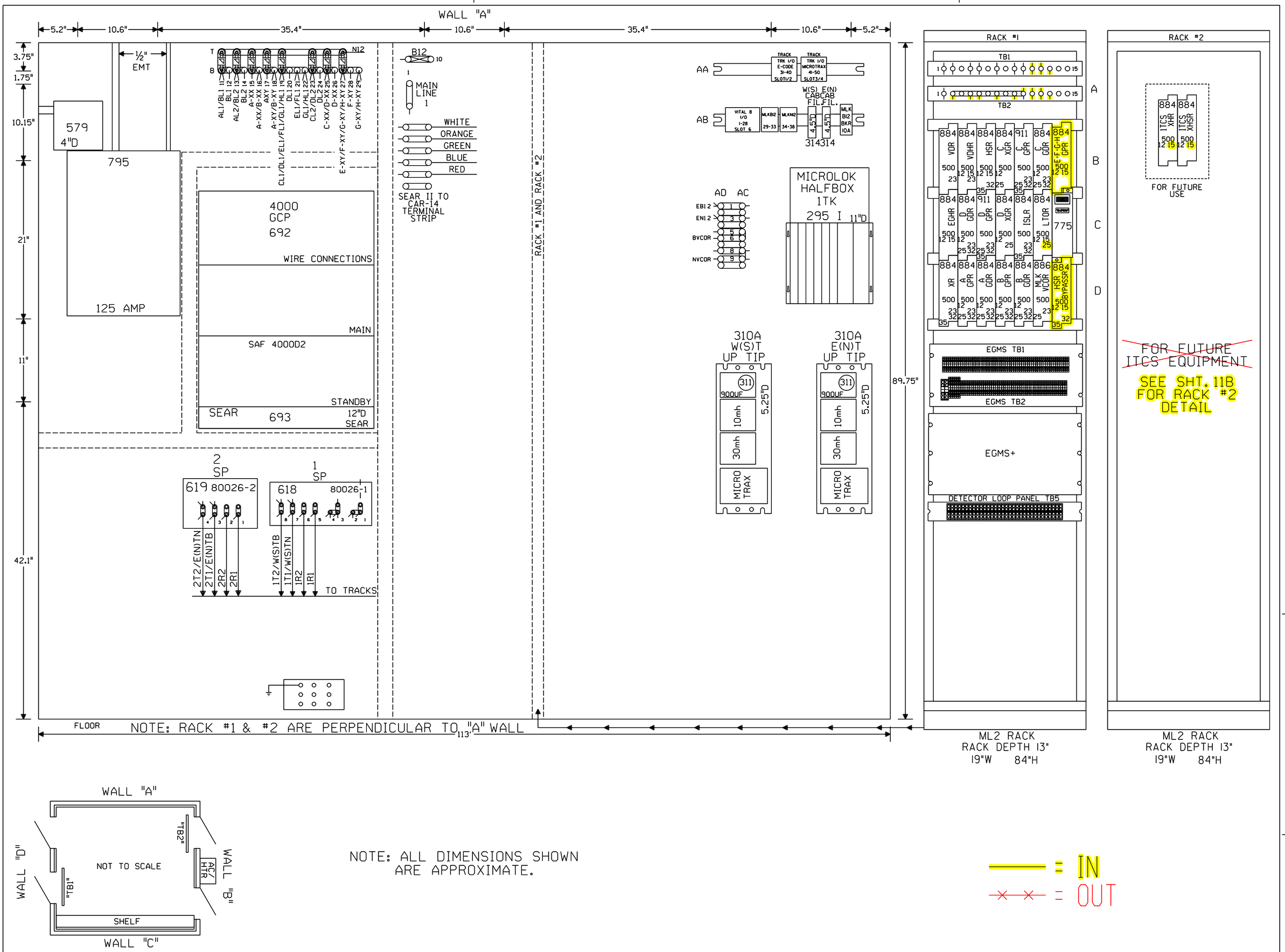

Designed: 3/25/15 UPGRADE ELECTROLOGIXS AND DESIGN FOR FUTURE FIBER Rec#: WO#: 12780 IS: /NBT / / WIT/JVJ	Revised: 3/30/15 INSTALLED ACS AND UPGRADED THE XINGS FROM M.P. 90-95 WITH QUAD GATES AND EGMS. Rec#: 20776 WO#: 05751 IS: 2/3/14 /MWK JH/WIT/WIT/MJF	CIRCUIT MODIFICATIONS ARE NOT TO BE MADE WITHOUT AUTHORITY FROM THE OFFICE OF SIGNAL DESIGN	Date: 01/10/12 Des: WIT Chk: MWK AFE: 05751	UNION PACIFIC RAILROAD PONTIAC, ILLINOIS MADISON STREET JOLIET SUBDIVISION Office of Sr AVP Engineering - Signal/TCO Omaha, Nebraska	Sh.: ~~11~~ 12 DOT 290757F MP: 91.97 ID: CSL9197.1~~1X~~ 12X

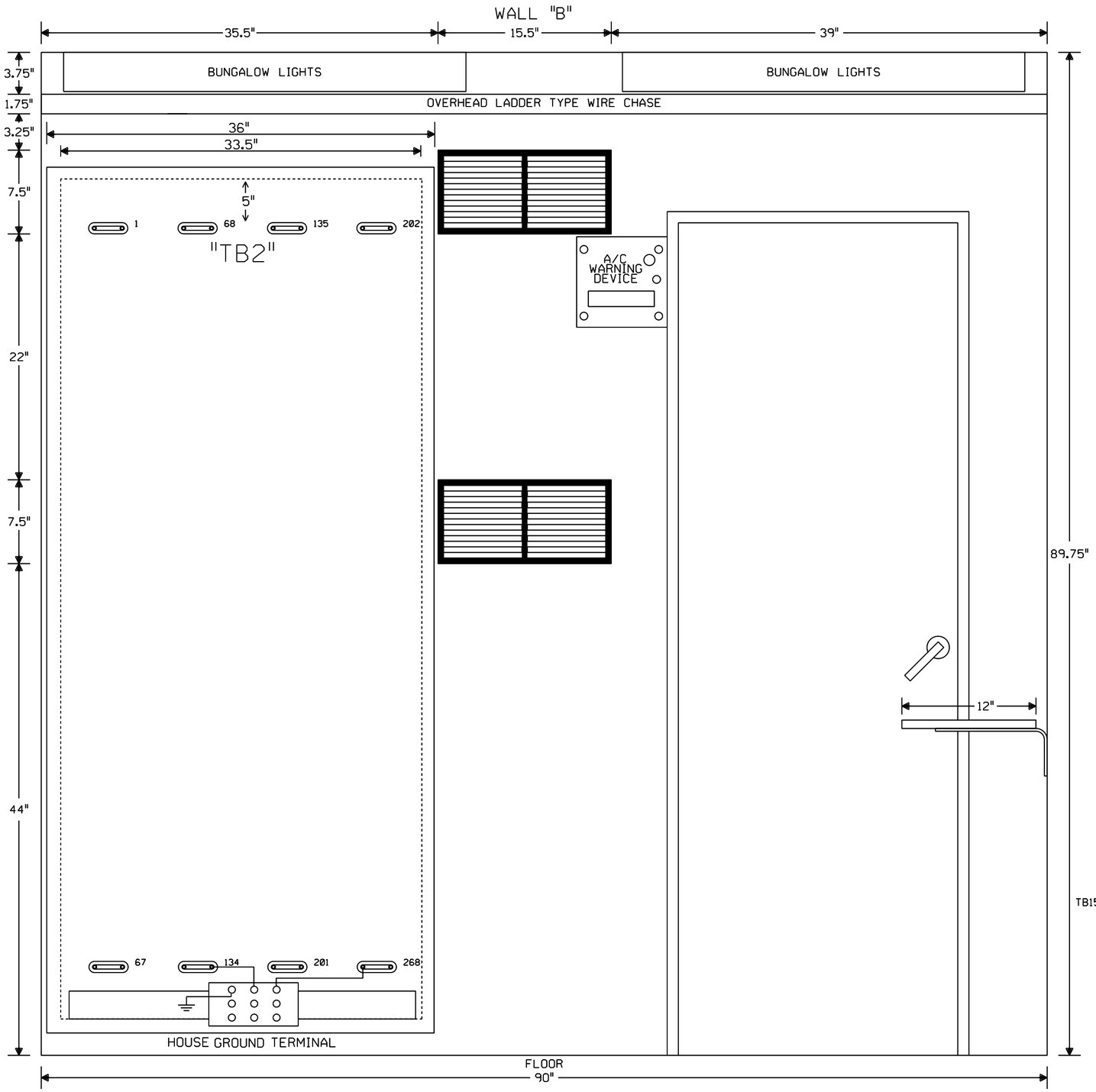

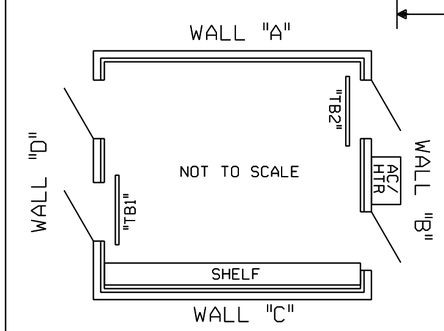

NOTE: ALL DIMENSIONS SHOWN ARE APPROXIMATE.

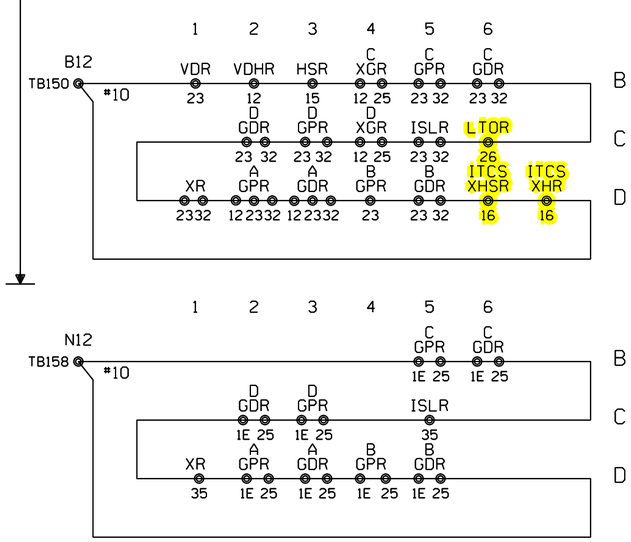

= IN

= OUT

Designed: 3/25/15 UPGRADE ELECTROLOGIXS AND DESIGN FOR FUTURE FIBER Rec#: WO#: 12780 IS: /NBT / / WIT/JVJ	Revised: 3/30/15 INSTALLED ACS AND UPGRADED THE XINGS FROM M.P. 90-95 WITH QUAD GATES AND EGMS. Rec#: 20776 WO#: 05751 IS: 2/3/14 /MWK JH/WIT/WIT/MJF	CIRCUIT MODIFICATIONS ARE NOT TO BE MADE WITHOUT AUTHORITY FROM THE OFFICE OF SIGNAL DESIGN	Date: 01/10/12 Des: WIT Chk: MWK AFE: 05751	UNION PACIFIC RAILROAD PONTIAC, ILLINOIS MADISON STREET JOLIET SUBDIVISION Office of Sr AVP Engineering - Signal/TCO Omaha, Nebraska	Sh.: ~~12~~ 13 DOT 290757F MP: 91.97 ID: CSL9197.~~12X~~ 13X

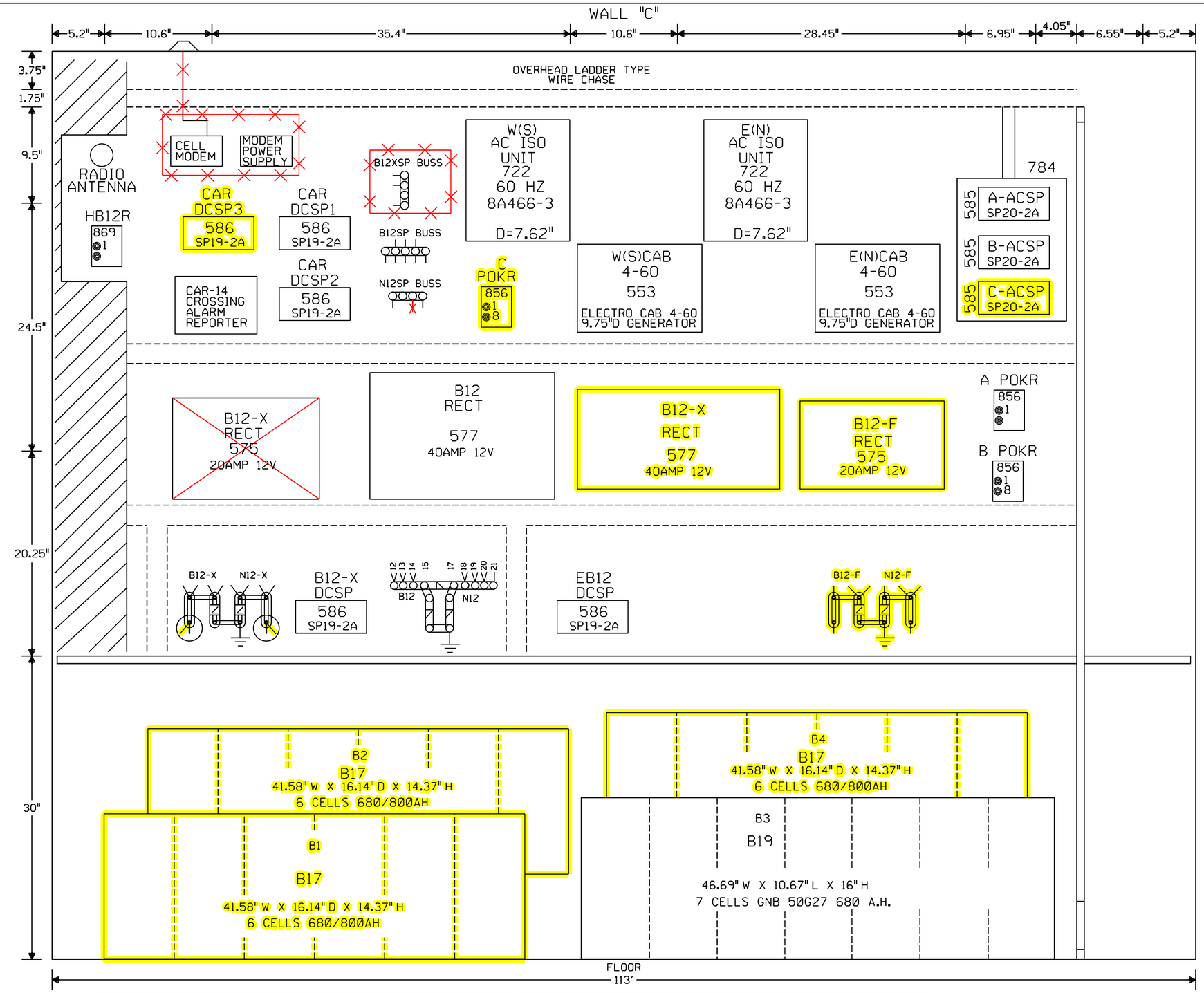

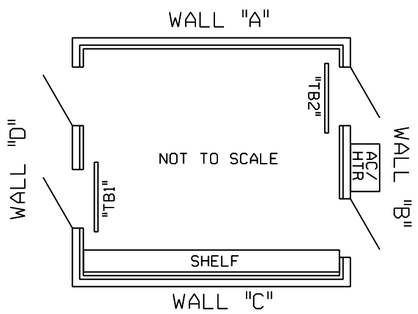

NOTE: ALL DIMENSIONS SHOWN ARE APPROXIMATE.

= IN

= OUT

= EXISTING/REVISE ORIGINALS IF A.C.'D

Designed: 3/25/15 UPGRADE ELECTROLOGIXS AND DESIGN FOR FUTURE FIBER Rec#: WO#: 12780 IS: /NBT / / WIT/JVJ	Revised: 3/30/15 INSTALLED ACS AND UPGRADED THE XINGS FROM M.P. 90-95 WITH QUAD GATES AND EGMS. Rec#: 20776 WO#: 05751 IS: 2/3/14 /MWK JH/WIT/WIT/MJF	CIRCUIT MODIFICATIONS ARE NOT TO BE MADE WITHOUT AUTHORITY FROM THE OFFICE OF SIGNAL DESIGN	Date: 01/10/12 Des: WIT< Chk: MWK AFE: 05751	UNION PACIFIC RAILROAD PONTIAC, ILLINOIS MADISON STREET JOLIET SUBDIVISION Office of Sr AVP Engineering - Signal/TCO Omaha, Nebraska	Sh.: ~~13~~ 14 DOT 290757F MP: 91.97 ID: CSL9197.1~~3X~~ 14X

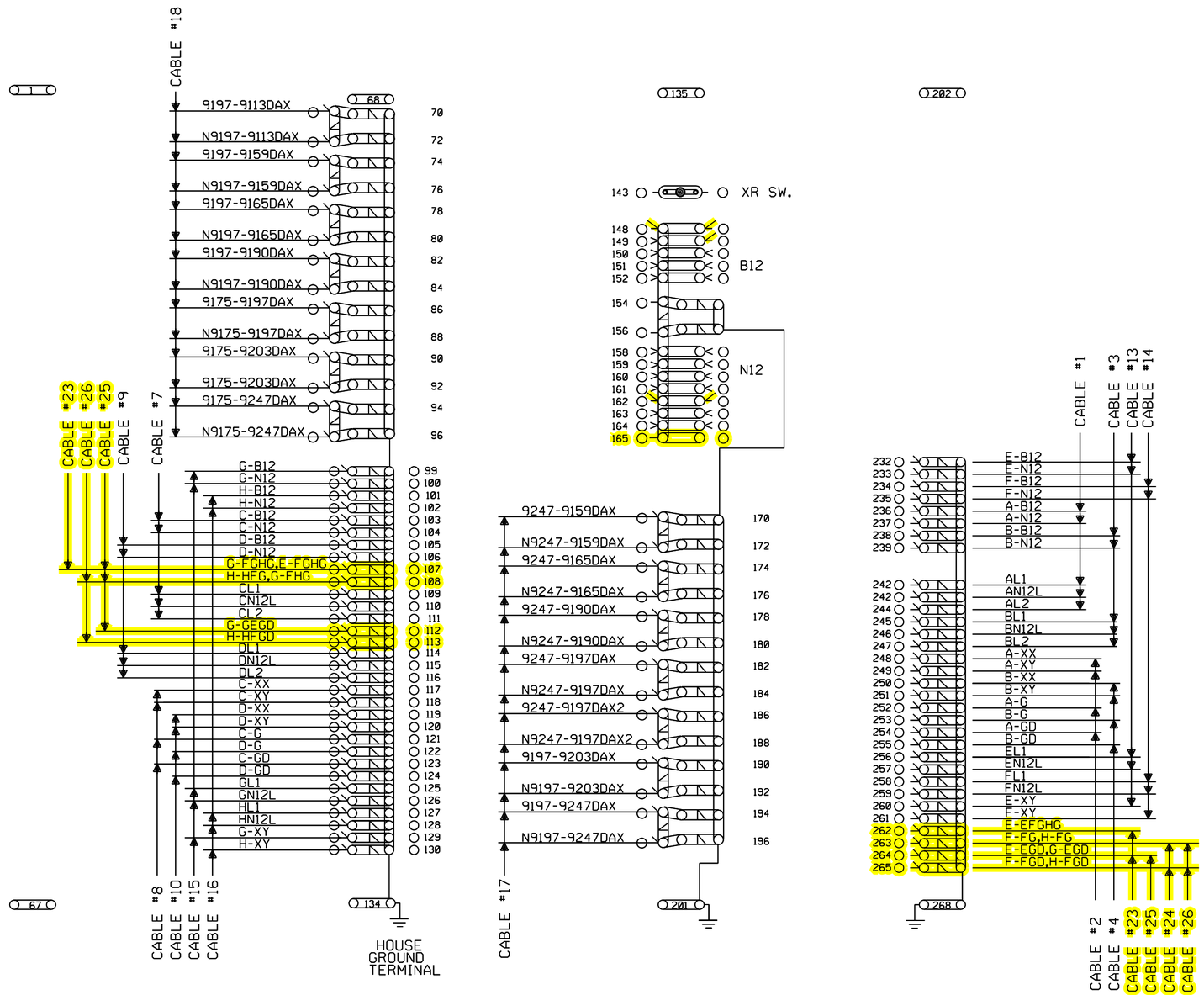

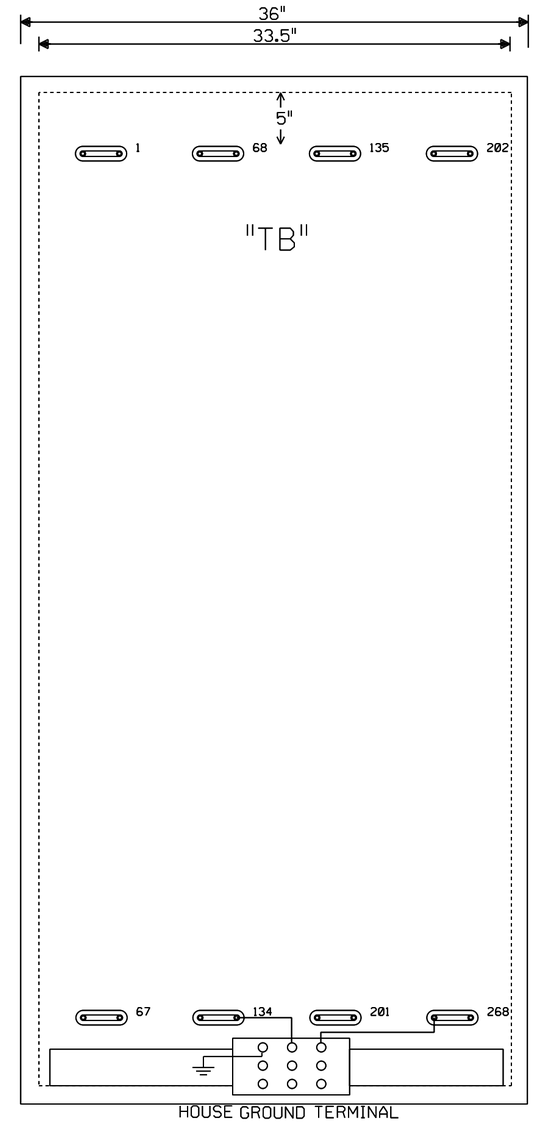

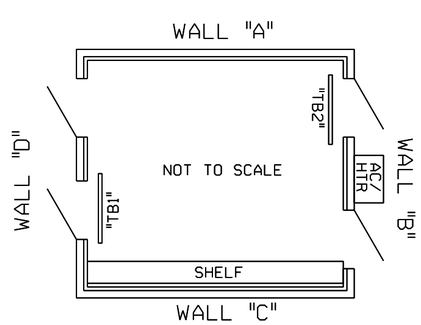

NOTE: ALL DIMENSIONS SHOWN ARE APPROXIMATE.

= IN

= OUT

						Designed: 3/25/15 UPGRADE ELECTROLOGIXS AND DESIGN FOR FUTURE FIBER Rec#: WO#: 12780 IS: /NBT / WIT/JVJ	Revised: 3/30/15 INSTALLED ACS AND UPGRADED THE XINGS FROM M.P. 90-95 WITH QUAD GATES AND EGMS. Rec#: 20776 WO#: 05751 IS: 2/3/14 /MWK JH/WIT/WIT/MJF	CIRCUIT MODIFICATIONS ARE NOT TO BE MADE WITHOUT AUTHORITY FROM THE OFFICE OF SIGNAL DESIGN	Date: 01/10/12 Des: WIT Chk: MWK AFE: 05751	UNION PACIFIC RAILROAD PONTIAC, ILLINOIS MADISON STREET JOLIET SUBDIVISION Office of Sr AVP Engineering - Signal/TCO Omaha, Nebraska	Sh.: ~~14~~ 15 DOT 290757F MP: 91.97 ID: CSL9197.1~~4X~~ 15X

Minimum Program Steps Report

Location and SIN

DOT Number: 290757F
Milepost Number: 91.97
Site Name: Madison St Pontiac IL

SIN: 762010010016 *

* Parameter is part of office check number calculation.

MCF and Template Selection

MCF Name: GCP-T6X-02-4.mcf
MCF Revision: 24
MCFCRC: 09FC363B
UCN: FFFFFFFF

Template = 2E:4 Uni,2 Rem (OCCN) *

* Parameter is part of office check number calculation.

Minimum Program Steps

BASIC: module configuration
Track 2/RIO 1 Slot = RIO (OCCN) *
Track 5/RIO 2 Slot = RIO (OCCN) *
Track 6/RIO 3 Slot = RIO (OCCN) *

PREDICTORS: track 1
Track 1 : Dax A Used = Yes (OCCN) *
Track 1 : Dax B Used = Yes (OCCN) *
Track 1 : Dax C Used = Yes (OCCN) *
Track 1 : Dax D Used = Yes (OCCN) *

PREDICTORS: track 3
Track 3 : Dax A Used = Yes (OCCN) *
Track 3 : Dax B Used = Yes (OCCN) *

GCP: track 1
Track 1 : GCP Frequency = 285 Hz (Set in Field,TCN)
Track 1 : Approach Distance = 2800 ft (Set in Field,TCN)
Track 1 : Island Distance = 131 ft (Set in Field,TCN)
Track 1 : Computed Distance = 3102 ft (Set in Field,TCN)
Track 1 : Linearization Steps = 98   (Set in Field,TCN)

GCP: track 1 prime
Track 1 : Prime Warning Time = 36 sec (OCCN) *
Track 1 : Prime UAX = IP (OCCN) *
Track 1 : Prime UAX Pickup = 15 sec (OCCN) *

GCP: track 1 Dax A
Track 1 : Dax A Warning Time = 36 sec (OCCN) *
Track 1 : Dax A Offset Distance = 358 ft (Set in Field)

GCP: track 1 Dax B
Track 1 : Dax B Warning Time = 37 sec (OCCN) *
Track 1 : Dax B Offset Distance = 1716 ft (Set in Field)

GCP: track 1 Dax C
Track 1 : Dax C Warning Time = 45 sec (OCCN) *

```
Track 1 : Dax C Offset Distance = 2079 ft (Set in Field)

GCP:  track 1 Dax D
Track 1 : Dax D Warning Time = 38 sec (OCCN) *
Track 1 : Dax D Offset Distance = 4458 ft (Set in Field)

GCP:  track 3
Track 3 : GCP Frequency = 285 Hz (Set in Field,TCN)
Track 3 : Approach Distance = 1127 ft (Set in Field,TCN)
Track 3 : Island Connection = Isl 1 (OCCN) *
Track 3 : Computed Distance = 1386 ft (Set in Field,TCN)
Track 3 : Linearization Steps = 99   (Set in Field,TCN)

GCP:  track 3 prime
Track 3 : Prime Warning Time = 36 sec (OCCN) *
Track 3 : Prime Offset Distance = 0 ft (Set in Field)
Track 3 : Prime UAX = IP (OCCN) *
Track 3 : Prime UAX Pickup = 15 sec (OCCN) *

GCP:  track 3 Dax A
Track 3 : Dax A Warning Time = 36 sec (OCCN) *
Track 3 : Dax A Offset Distance = 344 ft (Set in Field)

GCP:  track 3 Dax B
Track 3 : Dax B Warning Time = 40 sec (OCCN) *
Track 3 : Dax B Offset Distance = 2643 ft (Set in Field)

ISLAND:  track 1
Track 1 : Isl Frequency = 10.0 kHz (Set in Field)
Track 1 : Pickup Delay (2s +) = 2 sec (OCCN) *

AND:  track Anding
AND 2 Used = Yes (OCCN) *
AND 3 Used = Yes (OCCN) *
AND 4 Used = Yes (OCCN) *
AND 5 Used = Yes (OCCN) *
AND 6 Used = Yes (OCCN) *

AND:  AND 1 XR
AND 1 Enable Used = Yes (OCCN) *

AND:  AND 2
AND 2 Track 3 = Dax A (OCCN) *
AND 2 Enable Used = Yes (OCCN) *

AND:  AND 3
AND 3 Track 3 = Dax B (OCCN) *
AND 3 Enable Used = Yes (OCCN) *

AND:  AND 4
AND 4 Track 1 = Dax C (OCCN) *
AND 4 Enable Used = Yes (OCCN) *

AND:  AND 5
AND 5 Track 1 = Dax A (OCCN) *
AND 5 Enable Used = Yes (OCCN) *

AND:  AND 6
AND 6 Track 1 = Dax B (OCCN) *
AND 6 Enable Used = Yes (OCCN) *

ADVANCED:  out of service
OOS Control = OOS IPs (OCCN) *
```

```
ADVANCED:  out of service 2
T3 OOS Control = OOS Input 1 (OCCN) *

SSCC
Bell On Gate Rising = Yes (OCCN) *

SSCC:  1
SSCC-1 Gate Delay = 5 sec (OCCN) *
SSCC 1 : Flash Rate = 55 (OCCN) *

SSCC:  2
SSCC-2 Gate Delay = 5 sec (OCCN) *
SSCC-2 Number of GPs = 2 (OCCN) *
SSCC-2 Number of GDs = 2 (OCCN) *
SSCC 2 : Flash Rate = 55 (OCCN) *

OUTPUT:  assignment page 1
OUT 1.1 = AND 1 XR (OCCN) *
OUT 1.2 = T1 Island (OCCN) *
OUT 2.1 = AND 2 (OCCN) *
OUT 2.2 = AND 3 (OCCN) *
OUT 2.3 = T1 Dax D (OCCN) *
OUT 2.4 = AND 4 (OCCN) *

OUTPUT:  assignment page 2
OUT 5.1 = AND 5 (OCCN) *
OUT 5.2 = AND 6 (OCCN) *

INPUT:  assignment page 1
IN 1.1 = AND 1 XR Enable (OCCN) *
IN 1.2 = Out Of Service IP 1 (OCCN) *
IN 2.1 = T1 Prime UAX (OCCN) *
IN 2.2 = AND 5 Enable (OCCN) *
IN 2.3 = AND 6 Enable (OCCN) *
IN 2.4 = AND 4 Enable (OCCN) *

INPUT:  assignment page 2
IN 5.1 = T1 Prime UAX (OCCN) *
IN 5.2 = GP 1.1 (OCCN) *
IN 6.2 = AND 3 Enable (OCCN) *
IN 6.3 = AND 2 Enable (OCCN) *
IN 6.4 = T3 Prime UAX (OCCN) *

IO:  assignment SSCC
IN 7.1 = AND 1 XR Enable (OCCN) *
IN 8.2 = GD 2.2 (OCCN) *
IN 8.3 = GP 2.2 (OCCN) *
IN 8.4 = GD 2.1 (OCCN) *
IN 8.5 = GP 2.1 (OCCN) *

SEAR
DI 1 = General 4 (OCCN) *
DI 2 = General 3 (OCCN) *

SEAR:  inputs
SP 3.1 = POK 1 (OCCN) *
SP 4.1 = General 3 (OCCN) *

SEAR:  slot 1-4 inputs
IN 3.1 = General 2 (OCCN) *
IN 3.2 = General 1 (OCCN) *
IN 4.1 = Vehicle Det Hlth (OCCN) *
```

```
IN 4.2 = 3 Vehicle Detect (OCCN) *

SEAR:  inputs slot 5
IN 5.3 = General 2 (OCCN) (Hidden) *
IN 5.4 = General 1 (OCCN) (Hidden) *

* Parameter is part of office check number calculation.

Check Numbers
-------------
Office Check Number: 66623A2E
Config. Check Number: 662AA8B1
(Based on MCF Revision 24)

Parameters not part of office check number calculation:

Track 1 : GCP Frequency = 285 Hz (Set in Field)
Track 1 : Approach Distance = 2800 ft (Set in Field)
Track 1 : Island Distance = 131 ft (Set in Field)
Track 1 : Computed Distance = 3102 ft (Set in Field)
Track 1 : Linearization Steps = 98   (Set in Field)
Track 1 : Dax A Offset Distance = 358 ft (Set in Field)
Track 1 : Dax B Offset Distance = 1716 ft (Set in Field)
Track 1 : Dax C Offset Distance = 2079 ft (Set in Field)
Track 1 : Dax D Offset Distance = 4458 ft (Set in Field)
Track 3 : GCP Frequency = 285 Hz (Set in Field)
Track 3 : Approach Distance = 1127 ft (Set in Field)
Track 3 : Computed Distance = 1386 ft (Set in Field)
Track 3 : Linearization Steps = 99   (Set in Field)
Track 3 : Prime Offset Distance = 0 ft (Set in Field)
Track 3 : Dax A Offset Distance = 344 ft (Set in Field)
Track 3 : Dax B Offset Distance = 2643 ft (Set in Field)
Track 1 : Isl Frequency = 10.0 kHz (Set in Field)

Comments
--------
<none>

Configuration Package File
--------------------------
Filename: CSL9197_290757F.pac
Path: C:\PAC File\
Date/Time: 5/10/2016 11:25:12
DT Version: 5.7.3
```