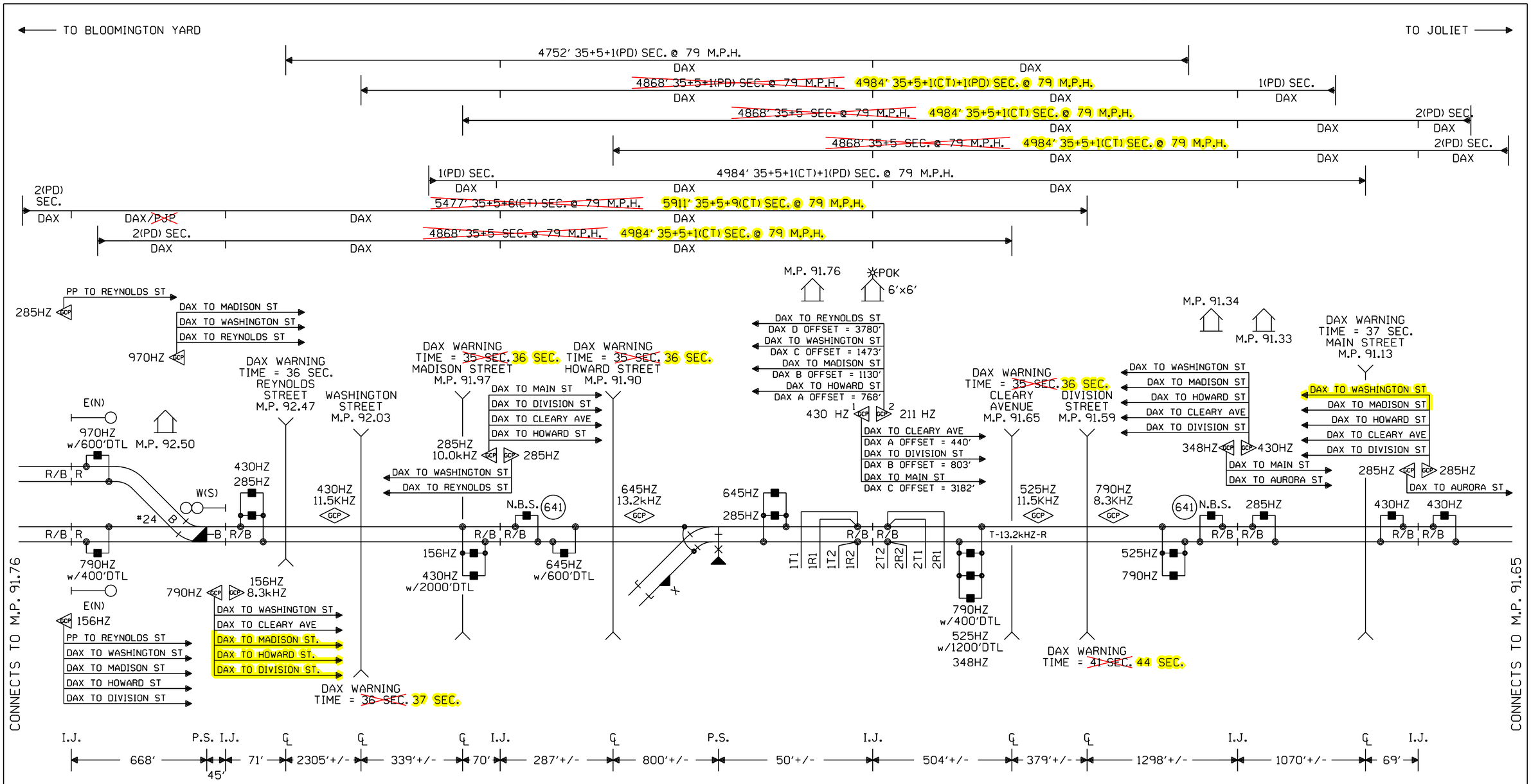


NOTES:

⊗ = TWISTED WIRES
ALL TRACK WIRES 2C. #6
INSULATED 1 TWIST PER FT.

TRANSMITTER AND RECEIVER LEADS
TO BE SEPARATED BY AT LEAST 12" IN TRENCH,
LENGTHS SHOULD NOT EXCEED MANUFACTURES
RECOMMENDATION.

ALL BUNGALOW WIRING TO BE #16 AWG FLEX
UNLESS OTHERWISE SPECIFIED EXCEPT ALL GROUND
WIRE TO BE #6 AWG FLEX OR LARGER.

REFER TO UP STANDARD DWG. FOR BUNGALOW
GROUNDING.

PORTABLE GENERATOR EXTENSION CORD
FOR 240V TO 240V IS PROVIDED AS WELL
AS A 120V TO 240V ADAPTER.

W(S) ◄—○—► E(N)

——— = IN
-x-x-x- = OUT

| | | | | | | | | | | | |
|---|---|---|---|---|---|---|---|---|---|---|---|
| | | | | Designed: 3/25/15<br>UPGRADE ELECTROLOGIXS AND DESIGN FOR FUTURE FIBER<br>Rec#: WO#: 12780<br>IS: /NBT / /WIT/JVJ | Revised: 3/30/15<br>INSTALLED ACS AND UPGRADED THE XINGS FROM M.P. 90-95 WITH QUAD GATES AND EGMS.<br>Rec#: 20776 WO#: 05751<br>IS: 2/3/14 /MWK<br>JH/WIT/WIT/MJF | MODIFICATION LEVEL<br>Q.A. LAST LEVEL CHECKED DU<br>LAST LEVEL MOD THIS TYPICAL DU<br>LAST LEVEL BY DESIGNER DU<br>CHANGED FROM TYPICAL? Y<br>REV 01.24.11 4K REMOTE.1 | CIRCUIT MODIFICATIONS ARE NOT TO BE MADE WITHOUT AUTHORITY FROM THE OFFICE OF SIGNAL DESIGN | Date: 1/10/12<br>Des: WIT<br>Chk: MWK<br>AFE: 05751 | UNION PACIFIC RAILROAD<br>PONTIAC, ILLINOIS<br>REMOTE LOCATION<br>JOLIET SUBDIVISION<br>Office of Sr AVP Engineering - Signal/TCO Omaha, Nebraska | Sh.: 1<br>DOT 000000R<br>MP: 91.75<br>ID: CSL9175.1X |

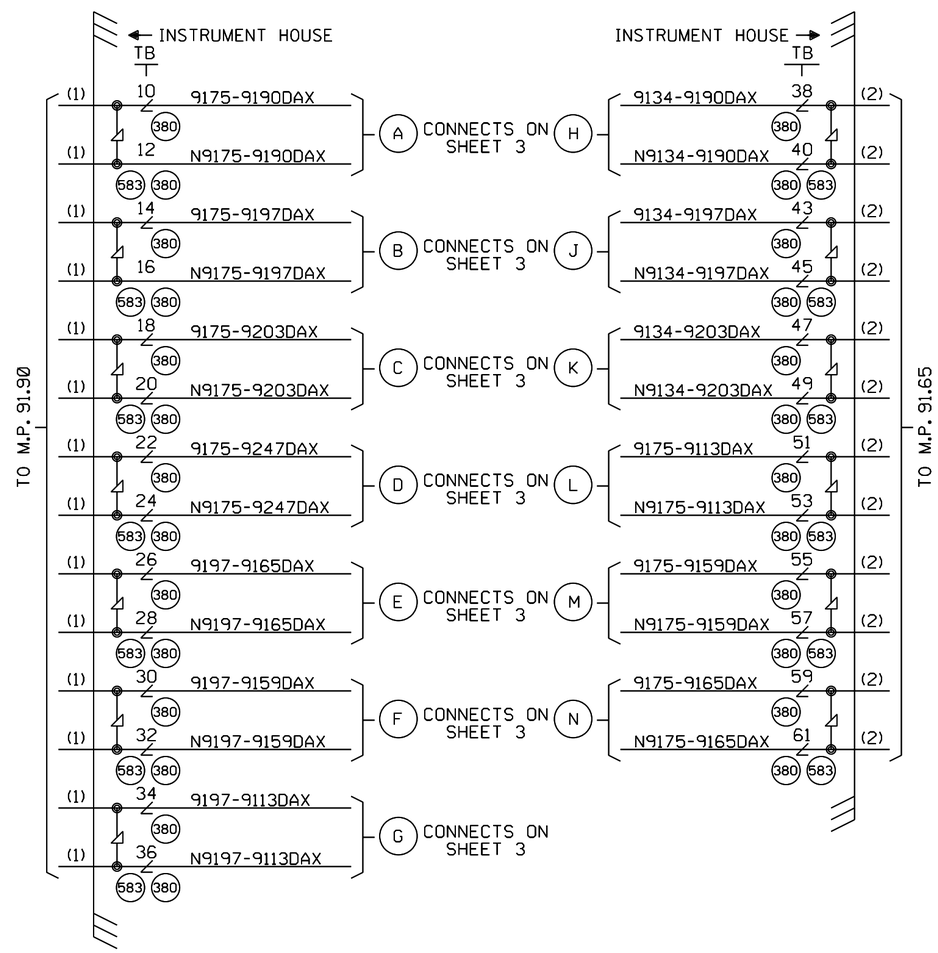


CABLE TABULATION

CABLE #1 19C #14 U.G.B.T. HOUSE TO M.P. 91.90
CABLE #2 12C #14 U.G.B.T. HOUSE TO M.P. 91.65

| | | | | | | | | | | | |
|---|---|---|---|---|---|---|---|---|---|---|---|
| | | | | | Revised: 3/30/15 INSTALLED ACS AND UPGRADED THE XINGS FROM M.P. 90-95 WITH QUAD GATES AND EGMS. Rec#: 20776 WO#: 05751 IS: 2/3/14 MWK JH/WIT/WIT/MJF | MODIFICATION LEVEL | | CIRCUIT MODIFICATIONS ARE NOT TO BE MADE WITHOUT AUTHORITY FROM THE OFFICE OF SIGNAL DESIGN | Date: 1/10/12 | UNION PACIFIC RAILROAD | Sh.: 1A |
| | | | | | | Q.A. LAST LEVEL CHECKED | DU | | Des: WIT | PONTIAC, ILLINOIS REMOTE LOCATION JOLIET SUBDIVISION | DOT 000000R |
| | | | | | | LAST LEVEL MOD THIS TYPICAL | DU | | Chk: MWK | | MP: 91.75 |
| | | | | | | LAST LEVEL BY DESIGNER | DU | | AFE: 05751 | | ID: CSL9175.1AX |
| | | | | | | CHANGED FROM TYPICAL? | Y | | | | |
| | | | | | | REV 01.24.11 4K REMOTE.1 | | | | Office of Sr AVP Engineering - Signal/TCO Omaha, Nebraska | |

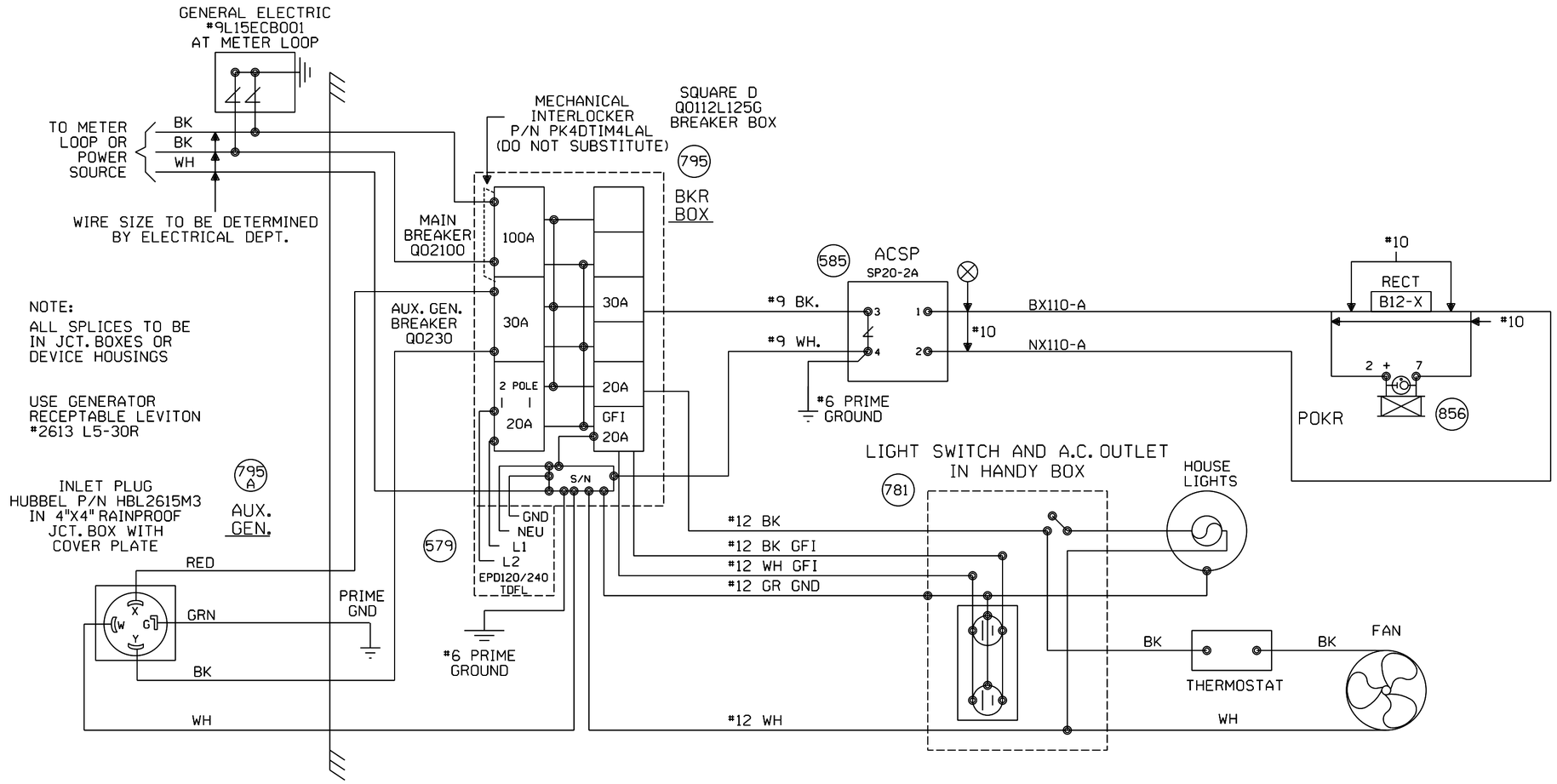


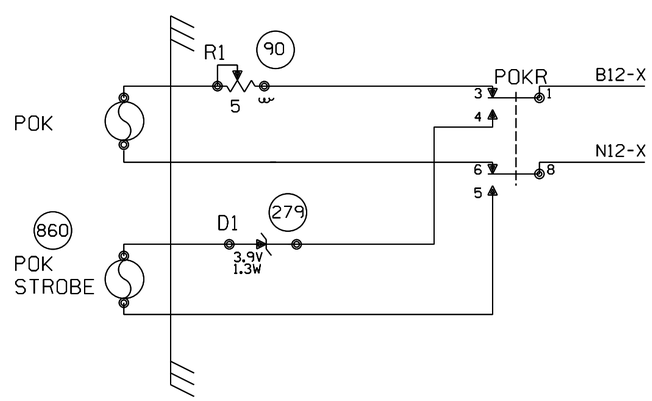


PONTIAC, ILLINOIS
REMOTE GCP LOCATION
M.P. 91.75
JOLIET SUBDIVISION

| | | | | | | | | | | | |
|---|---|---|---|---|---|---|---|---|---|---|---|
| | | | | | REV. 2-20-08 UPGRADED CROSSING PROTECTION FOR THE HIGH SPEED RAIL PROJ. FROM MAZONIA TO SPRINGFIELD. AFE 00443 REC# 14411 I.S. 3-9-06 JJF GNT/WITT/WITT/JNM | MODIFICATION LEVEL | | CIRCUIT MODIFICATIONS ARE NOT TO BE MADE WITHOUT AUTHORITY FROM THE OFFICE OF SIGNAL DESIGN | DES: WITT.IND. | UNION PACIFIC RAILROAD JOLIET, ILLINOIS TO BLOOMINGTON, ILLINOIS C.T.C. CIRCUITS | DATE 11-20-01 |
| | | | | | | Q.A. LAST LEVEL CHK'D. | DD | | DIG: WITT.IND. | | SHEET 2 |
| | | | | | | LAST LEVEL MOD. THIS TYP. | DB | | CHK: J.J.F. | | DWG 91.75 |
| | | | | | | LAST LEVEL BY DESIGNER. | DD | | A.F.E. 00443 | | RTE-CSL |
| | | | | | | CHANGED FROM TYP.? Y/N | N | | ID= CSL9175.2X | OFFICE OF CHIEF ENG'R OMAHA NEBR. | |

(REV. 2-7-01 ) (REMOTE.2)

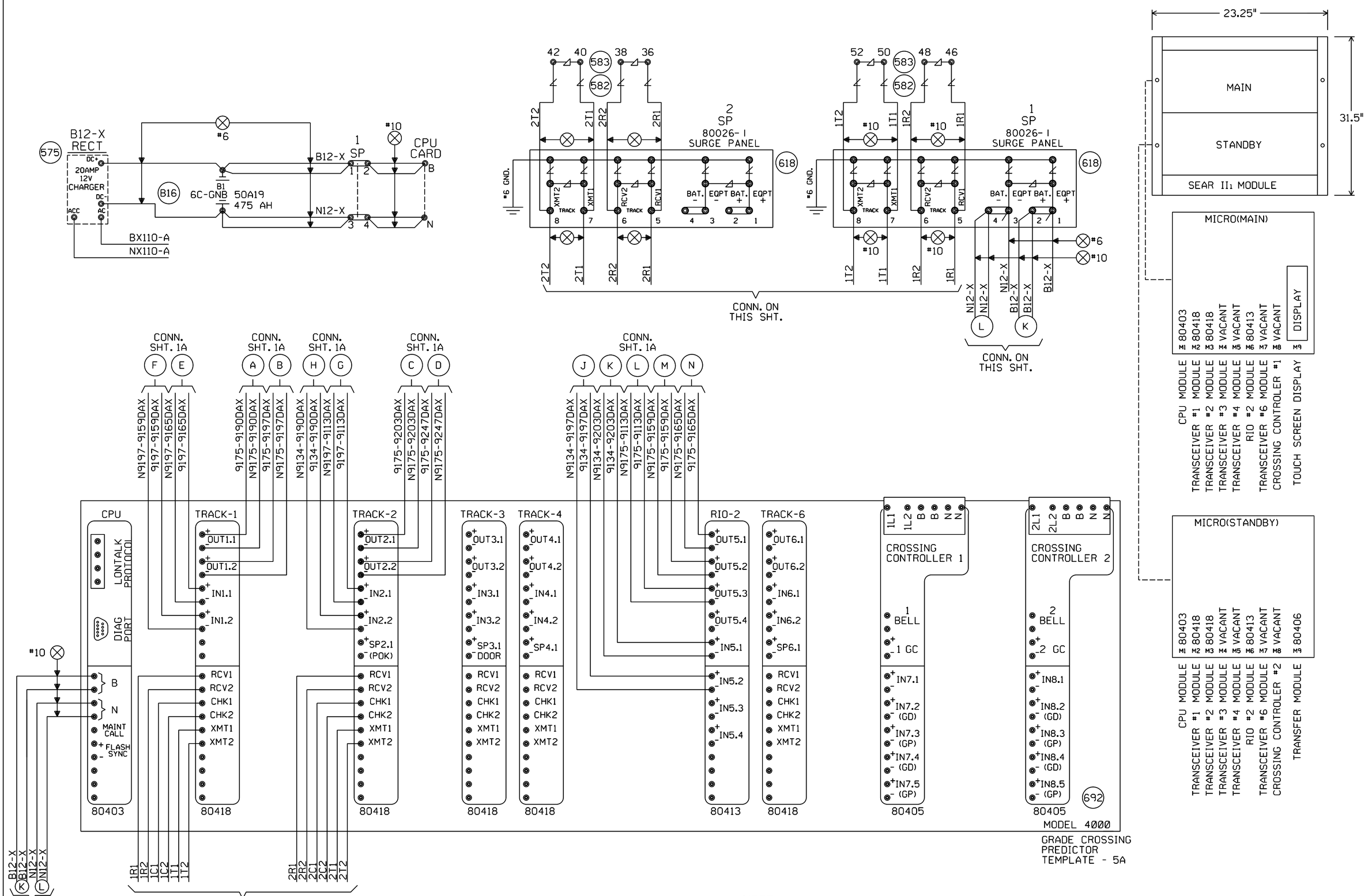


| "Mf" FREQUENCY (HZ) | MAXIMUM TRANSMIT WIRE LENGTH (FEET) |
|---|---|
| 86 | 100 |
| 114 | 125 |
| 156 | 150 |
| 211 | 200 |
| 285-970 | 250 |

NOTE:
EACH TRANSMITTER TO RAIL WIRE FROM XMT1 AND XMT2 MUST NOT EXCEED THE MAXIMUM LENGTH SPECIFIED IN THE TABLE SHOWN. THE RECEIVER WIRE LENGTH IS NOT CRITICAL. DOES NOT APPLY TO 6 TRACK WIRE APPLICATION.

Revised: 3/30/15
INSTALLED ACS AND UPGRADED THE XINGS FROM M.P. 90-95 WITH QUAD GATES AND EGMS.
Rec#: 20776 WO#: 05751
IS: 2/3/14 MWK
JH/WIT/WIT/MJF

| MODIFICATION LEVEL | |
|---|---|
| Q. A. LAST LEVEL CHECKED | DU |
| LAST LEVEL MOD THIS TYPICAL | DU |
| LAST LEVEL BY DESIGNER | DU |
| CHANGED FROM TYPICAL? | Y |

Rev 01.24.11 4K 2TKEGMS.3

CIRCUIT MODIFICATIONS ARE NOT TO BE MADE WITHOUT AUTHORITY FROM THE OFFICE OF SIGNAL DESIGN

Date: 1/10/12
Des: WIT
Chk: MWK
AFE: 05751

# UNION PACIFIC RAILROAD

PONTIAC, ILLINOIS
REMOTE LOCATION
JOLIET SUBDIVISION

Office of Sr AVP Engineering - Signal/TCO Omaha, Nebraska

Sh.: 3
DOT 000000R
MP: 91.75
ID: CSL9175.3X

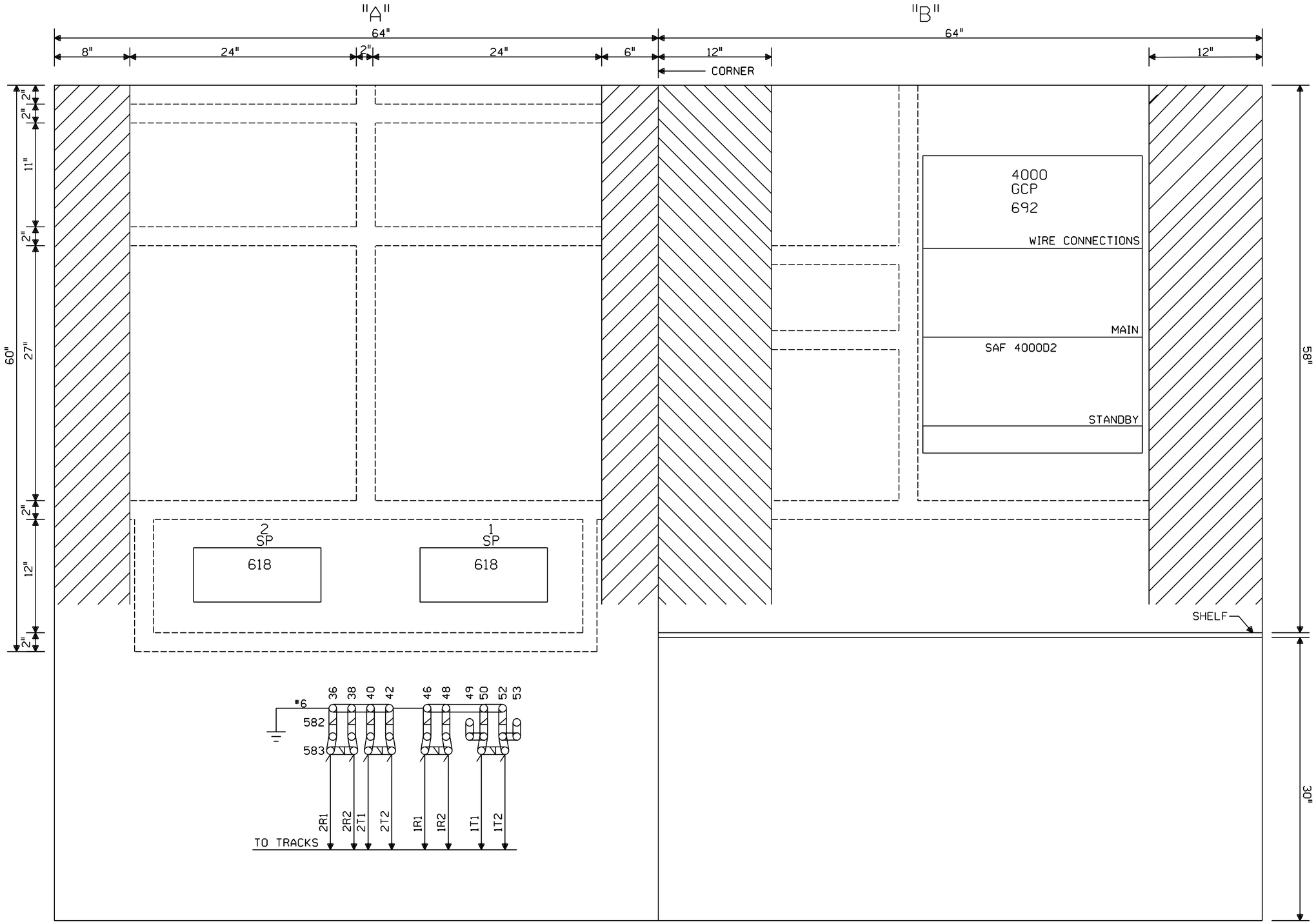


NOTE: ALL DIMENSIONS SHOWN ARE APPROXIMATE.

0 1 2 3 4 FEET

PONTIAC, ILLINOIS
REMOTE GCP LOCATION
M.P.91.75
JOLIET SUBDIVISION

Revised: 3/30/15
INSTALLED ACS AND UPGRADED THE XINGS FROM M.P. 90-95 WITH QUAD GATES AND EGMS.
Rec#: 20776 WO#: 05751
IS: 2/3/14 MWK
JH/WIT/WIT/MJF

REV. 2-20-08
UPGRADED CROSSING PROTECTION FOR THE HIGH SPEED RAIL PROJ. FROM MAZONIA TO SPRINGFIELD.
AFE 00443
REC# 14411
I.S. 3-9-06 JJF
GNT/WITT/WITT/JNM

| MODIFICATION LEVEL | |
|---|---|
| Q.A. LAST LEVEL CHK'D. | DD |
| LAST LEVEL MOD. THIS TYP. | DB |
| LAST LEVEL BY DESIGNER. | DD |
| CHANGED FROM TYP.? Y/N | Y |

CIRCUIT MODIFICATIONS ARE NOT TO BE MADE WITHOUT AUTHORITY FROM THE OFFICE OF SIGNAL DESIGN

DES: WITT.IND.
DIG: WITT.IND.
CHK: J.J.F.
A.F.E. 00443
ID= CSL9175.4X

UNION PACIFIC RAILROAD
JOLIET, ILLINOIS TO
BLOOMINGTON, ILLINOIS
C.T.C. CIRCUITS
OFFICE OF CHIEF ENG'R OMAHA NEBR.

DATE 11-20-01
SHEET 4
DWG 91.75
RTE-CSL

(REV. 01.02.21) (3K2TKUG.8 )

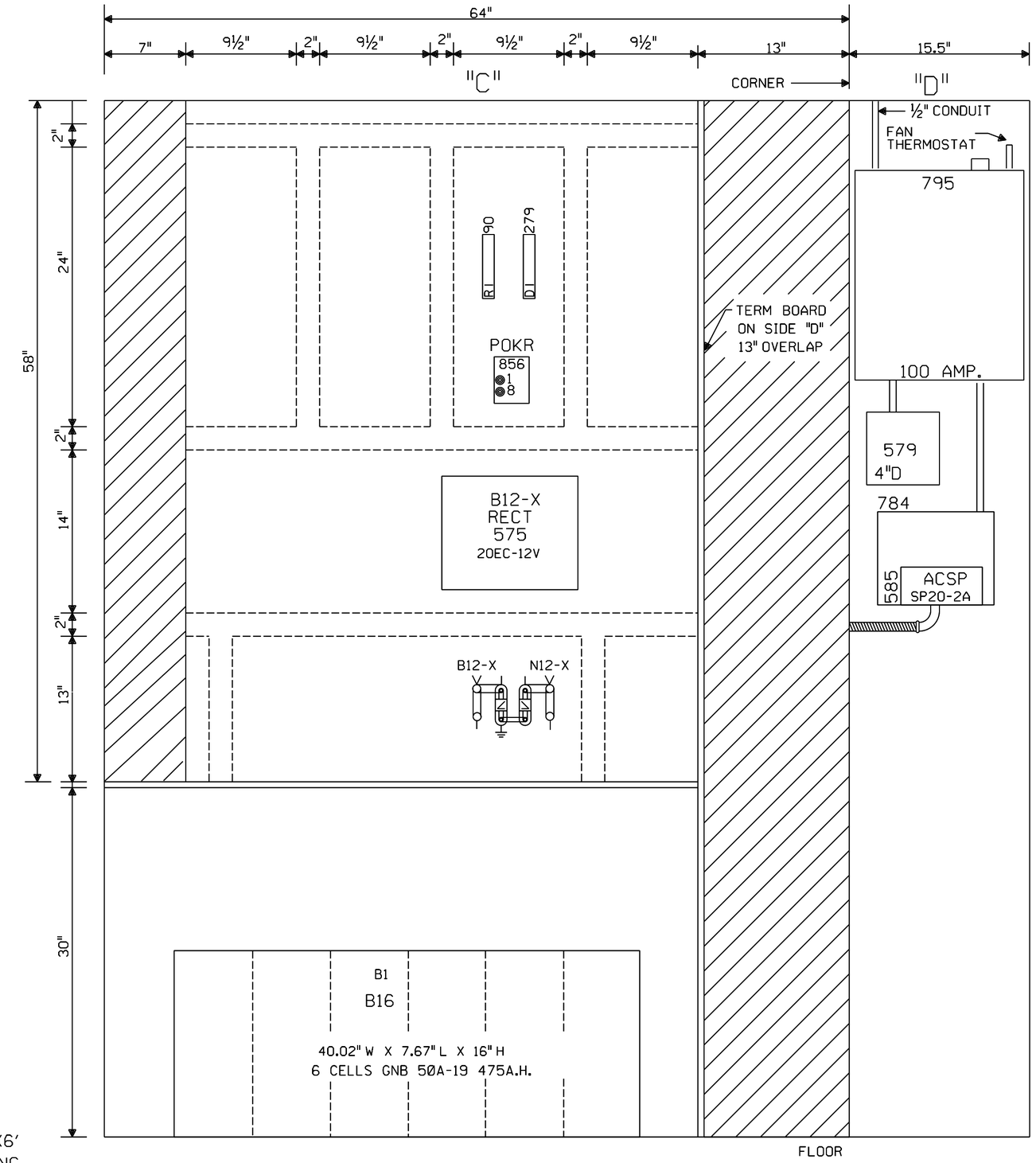


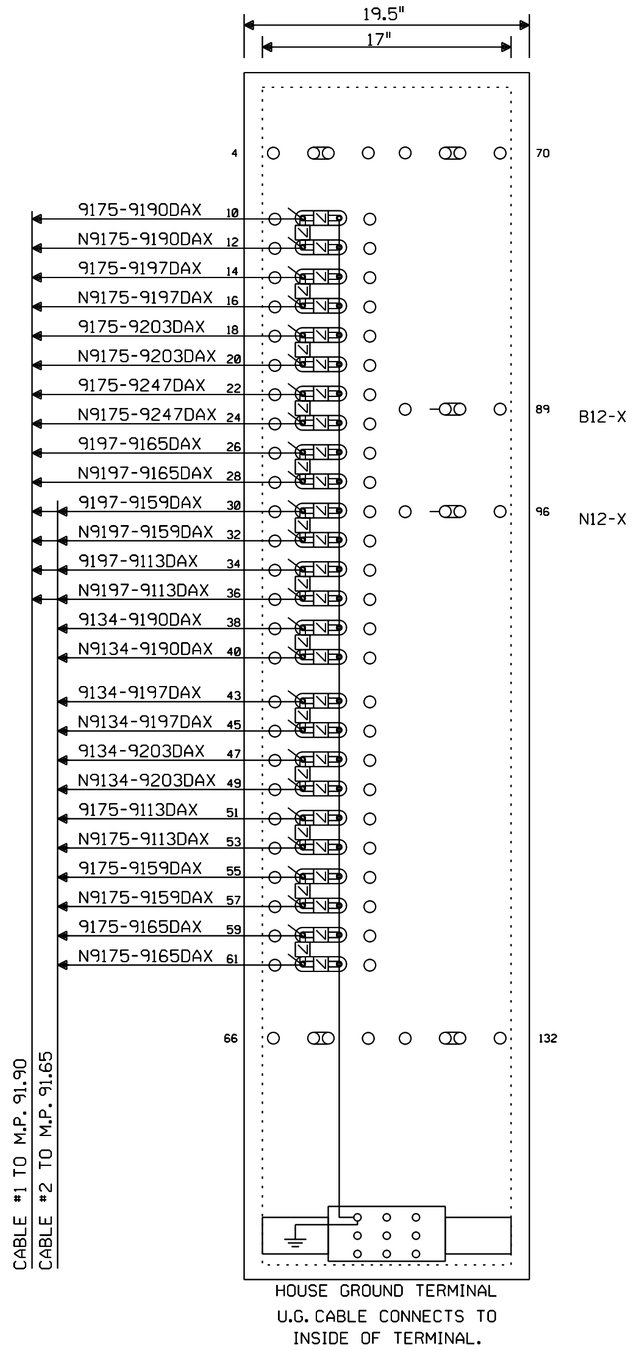


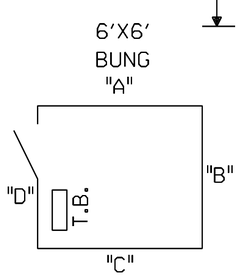


NOTE: ALL DIMENSIONS SHOWN
ARE APPROXIMATE.

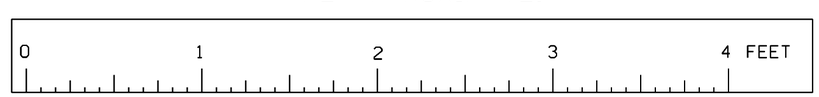


PONTIAC, ILLINOIS
REMOTE GCP LOCATION
M.P.91.75
JOLIET SUBDIVISION

| | | | |
|---|---|---|---|
| Revised: 3/30/15<br>INSTALLED ACS AND UPGRADED THE XINGS FROM M.P. 90-95 WITH QUAD GATES AND EGMS.<br>Rec#: 20776 WO#: 05751<br>IS: 2/3/14 MWK<br>JH/WIT/WIT/MJF | REV. 2-20-08<br>UPGRADED CROSSING PROTECTION FOR THE HIGH SPEED RAIL PROJ. FROM MAZONIA TO SPRINGFIELD.<br>AFE 00443<br>REC# 14411<br>I.S. 3-9-06 JJF<br>GNT/WITT/WITT/JNM | MODIFICATION LEVEL<br>Q.A. LAST LEVEL CHK'D. DD<br>LAST LEVEL MOD. THIS TYP. DB<br>LAST LEVEL BY DESIGNER. DD<br>CHANGED FROM TYP.? Y/N Y | CIRCUIT MODIFICATIONS ARE NOT TO BE MADE WITHOUT AUTHORITY FROM THE OFFICE OF SIGNAL DESIGN | DES: WITT.IND.<br>DIG: WITT.IND.<br>CHK: J.J.F.<br>A.F.E. 00443<br>ID= CSL9175.5X | UNION PACIFIC RAILROAD<br>JOLIET, ILLINOIS TO<br>BLOOMINGTON, ILLINOIS<br>C.T.C. CIRCUITS<br>OFFICE OF CHIEF ENG'R OMAHA NEBR. | DATE 11-20-01<br>SHEET 5<br>DWG 91.75<br>RTE-CSL |

(REV. 01.02.21) (G.DGN )

# Minimum Program Steps Report

## Location and SIN

DOT Number: 000000R
Milepost Number: MP 91.75
Site Name: REMOTE Pontiac IL

SIN: 762010010016 *

* Parameter is part of office check number calculation.

## MCF and Template Selection

MCF Name: GCP-T6X-02-4.mcf
MCF Revision: 24
MCFCRC: 09FC363B
UCN: FFFFFFFF

Template = 5A:3 Remote pairs (OCCN) *

* Parameter is part of office check number calculation.

## Minimum Program Steps

TEMPLATE: module configuration
Track 5/RIO 2 Slot = RIO (OCCN) *

TEMPLATE: track 1-Remote Dax
Track 1 : GCP Frequency = 430 Hz (Field,TCN)
Track 1 : Approach Distance = 1127 ft (Set in Field,TCN)
Track 1 : Dax A Warning Time = 36 sec (OCCN) *
Track 1 : Dax A Offset Distance = 454 ft (Set in Field)
Track 1 : GCP Transmit Level = Medium (Set in Field,TCN)

TEMPLATE: track 1-Remote Daxes
Track 1 : Dax B Used = Yes (OCCN) *
Track 1 : Dax B Warning Time = 44 sec (OCCN) *
Track 1 : Dax B Offset Distance = 755 ft (Set in Field)
Track 1 : Dax C Used = Yes (OCCN) *
Track 1 : Dax C Warning Time = 37 sec (OCCN) *
Track 1 : Dax C Offset Distance = 3182 ft (Set in Field)

TEMPLATE: track 2-Remote Dax
Track 2 : GCP Frequency = 211 Hz (Field,TCN)
Track 2 : Approach Distance = 2190 ft (Set in Field,TCN)
Track 2 : Dax A Warning Time = 36 sec (OCCN) *
Track 2 : Dax A Offset Distance = 768 ft (Set in Field)
Track 2 : GCP Transmit Level = Medium (Set in Field,TCN)

TEMPLATE: track 2-Remote Daxes
Track 2 : Dax B Used = Yes (OCCN) *
Track 2 : Dax B Warning Time = 36 sec (OCCN) *
Track 2 : Dax B Offset Distance = 1130 ft (Set in Field)
Track 2 : Dax C Used = Yes (OCCN) *
Track 2 : Dax C Warning Time = 37 sec (OCCN) *
Track 2 : Dax C Offset Distance = 1473 ft (Set in Field)
Track 2 : Dax D Used = Yes (OCCN) *
Track 2 : Dax D Warning Time = 36 sec (OCCN) *
Track 2 : Dax D Offset Distance = 3780 ft (Set in Field)

TEMPLATE: track Anding

AND 2 Used = Yes (OCCN) *
AND 3 Used = Yes (OCCN) *
AND 4 Used = Yes (OCCN) *

TEMPLATE:  AND 1 XR
AND 1 XR Track 2 = Dax A (OCCN) *
AND 1 Enable Used = Yes (OCCN) *

TEMPLATE:  AND 2
AND 2 Track 2 = Dax B (OCCN) *
AND 2 Enable Used = Yes (OCCN) *

TEMPLATE:  AND 3
AND 3 Track 2 = Dax C (OCCN) *
AND 3 Enable Used = Yes (OCCN) *

TEMPLATE:  AND 4
AND 4 Track 1 = Dax A (OCCN) *
AND 4 Enable Used = Yes (OCCN) *

TEMPLATE:  OOS
OOS Timeout = 1 hrs (Set in Field)

TEMPLATE:  OP assignment 1
OUT 1.1 = AND 1 XR (OCCN) *
OUT 1.2 = AND 2 (OCCN) *
OUT 2.1 = AND 3 (OCCN) *
OUT 2.2 = T2 Dax D (OCCN) *

TEMPLATE:  OP assignment 2
OUT 5.1 = AND 4 (OCCN) *
OUT 5.2 = AND 5 (OCCN) *
OUT 5.3 = AND 6 (OCCN) *

TEMPLATE:  IP assignment 1
IN 1.1 = AND 4 Enable (OCCN) *
IN 1.2 = AND 5 Enable (OCCN) *
IN 2.1 = AND 6 Enable (OCCN) *
IN 2.2 = AND 1 XR Enable (OCCN) *

TEMPLATE:  IP assignment 2
IN 5.1 = AND 3 Enable (OCCN) *
IN 5.2 = AND 2 Enable (OCCN) *

AND:  track Anding
AND 5 Used = Yes (OCCN) *
AND 6 Used = Yes (OCCN) *

AND:  AND 5
AND 5 Track 1 = Dax B (OCCN) *
AND 5 Enable Used = Yes (OCCN) *

AND:  AND 6
AND 6 Track 1 = Dax C (OCCN) *
AND 6 Enable Used = Yes (OCCN) *

ADVANCED:  site options
Daylight Savings = Off (Set in Field)

* Parameter is part of office check number calculation.

Check Numbers
---

Office Check Number: 3C141001
Config. Check Number: 34244C1C
(Based on MCF Revision 24)

Parameters not part of office check number calculation:

Track 1 : GCP Frequency = 430 Hz
Track 1 : Approach Distance = 1127 ft (Set in Field)
Track 1 : Dax A Offset Distance = 454 ft (Set in Field)
Track 1 : GCP Transmit Level = Medium (Set in Field)
Track 1 : Dax B Offset Distance = 755 ft (Set in Field)
Track 1 : Dax C Offset Distance = 3182 ft (Set in Field)
Track 2 : GCP Frequency = 211 Hz
Track 2 : Approach Distance = 2190 ft (Set in Field)
Track 2 : Dax A Offset Distance = 768 ft (Set in Field)
Track 2 : GCP Transmit Level = Medium (Set in Field)
Track 2 : Dax B Offset Distance = 1130 ft (Set in Field)
Track 2 : Dax C Offset Distance = 1473 ft (Set in Field)
Track 2 : Dax D Offset Distance = 3780 ft (Set in Field)
OOS Timeout = 1 hrs (Set in Field)
Daylight Savings = Off (Set in Field)

Comments
---
<none>

Configuration Package File
---
Filename: CSL9175_000000R.pac
Path: C:\PAC FILE\
Date/Time: 6/23/2015 12:23:13