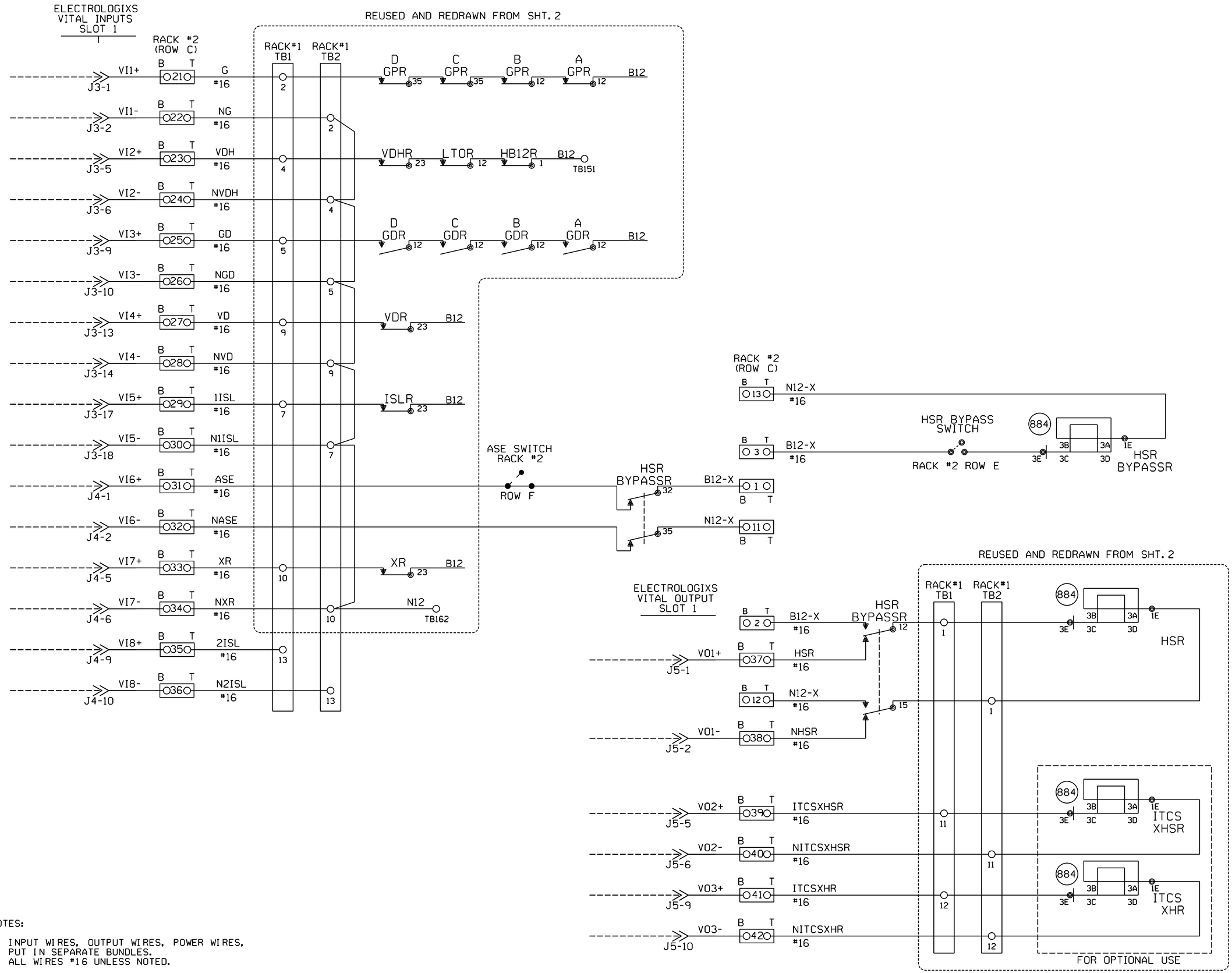

NEW SHEET

NOTES:

1. INPUT WIRES, OUTPUT WIRES, POWER WIRES, PUT IN SEPARATE BUNDLES.
2. ALL WIRES #16 UNLESS NOTED.
3. O?? O 2 POSITION WAGO BLOCK.

Designed: 3/25/15
UPGRADE ELECTROLOGIXS AND DESIGN FOR FUTURE FIBER
Rec*: WO*: 12780
IS: / / WIT/JVJ

CIRCUIT MODIFICATIONS ARE NOT TO BE MADE WITHOUT AUTHORITY FROM THE OFFICE OF SIGNAL DESIGN

DATE:	3/25/15
DES:	WIT
CHK:	NBT
A.F.E.	12780

UNION PACIFIC RAILROAD
PONTIAC, ILLINOIS
CLEARY AVENUE
JOLIET SUBDIVISION
Office of Sr AVP Engineering - Signal/TCO Omaha, Nebraska

SH.	10
DOT	290752W
M.P.	91.65
ID=	CSL9165.10X

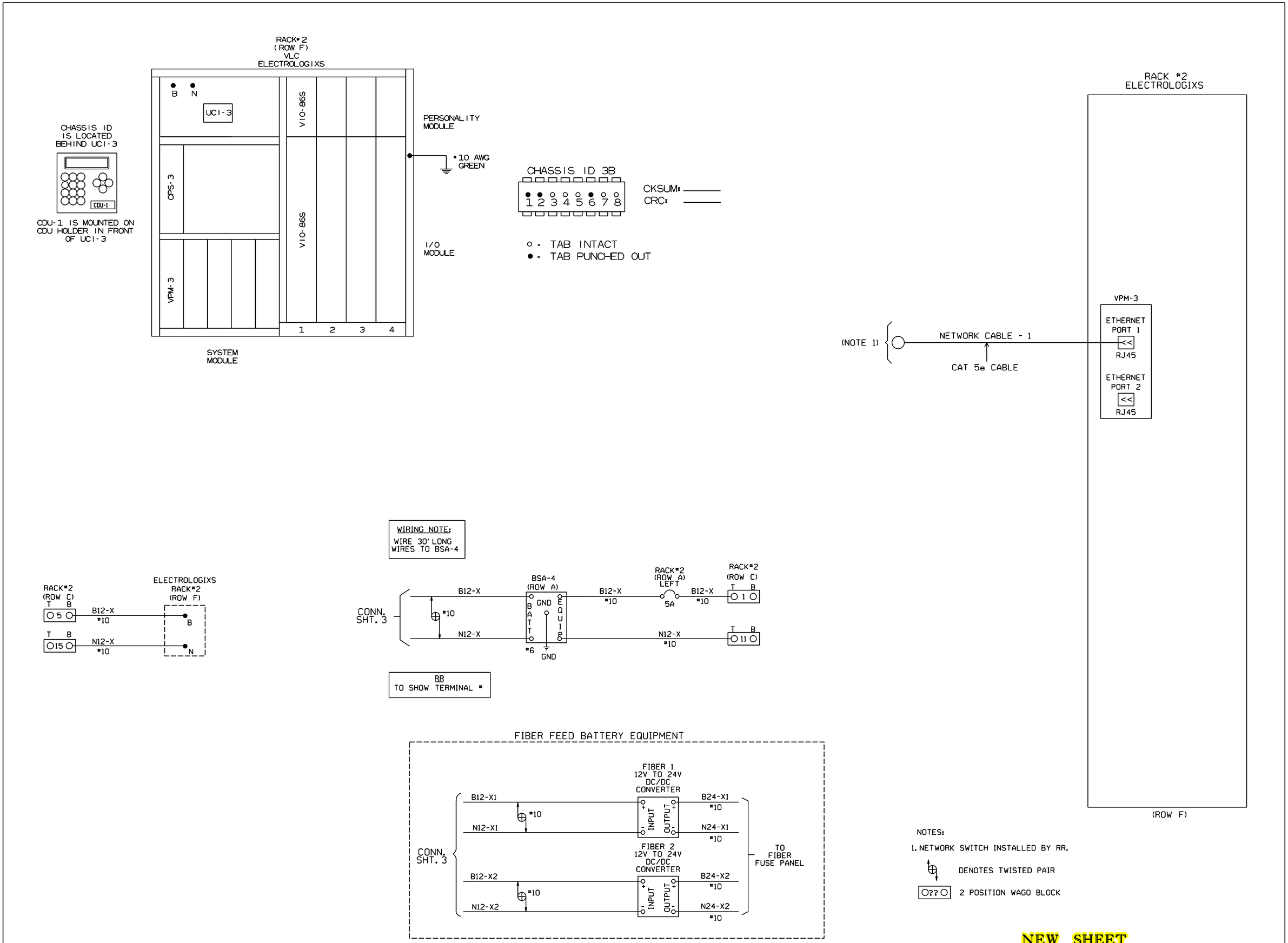

NEW SHEET

							Designed: 3/25/15 UPGRADE ELECTROLOGIXS AND DESIGN FOR FUTURE FIBER Rec#: WO#: 12780 IS: / /NBT / /WIT/JVJ	CIRCUIT MODIFICATIONS ARE NOT TO BE MADE WITHOUT AUTHORITY FROM THE OFFICE OF SIGNAL DESIGN	DATE: 3/25/15 DES: WIT CHK: NBT A.F.E. 12780	UNION PACIFIC RAILROAD PONTIAC, ILLINOIS CLEARY AVENUE JOLIET SUBDIVISION Office of Sr AVP Engineering - Signal/TCO Omaha, Nebraska	SH. 10A DOT 290752W M.P. 91.65 ID= CSL9165.10AX

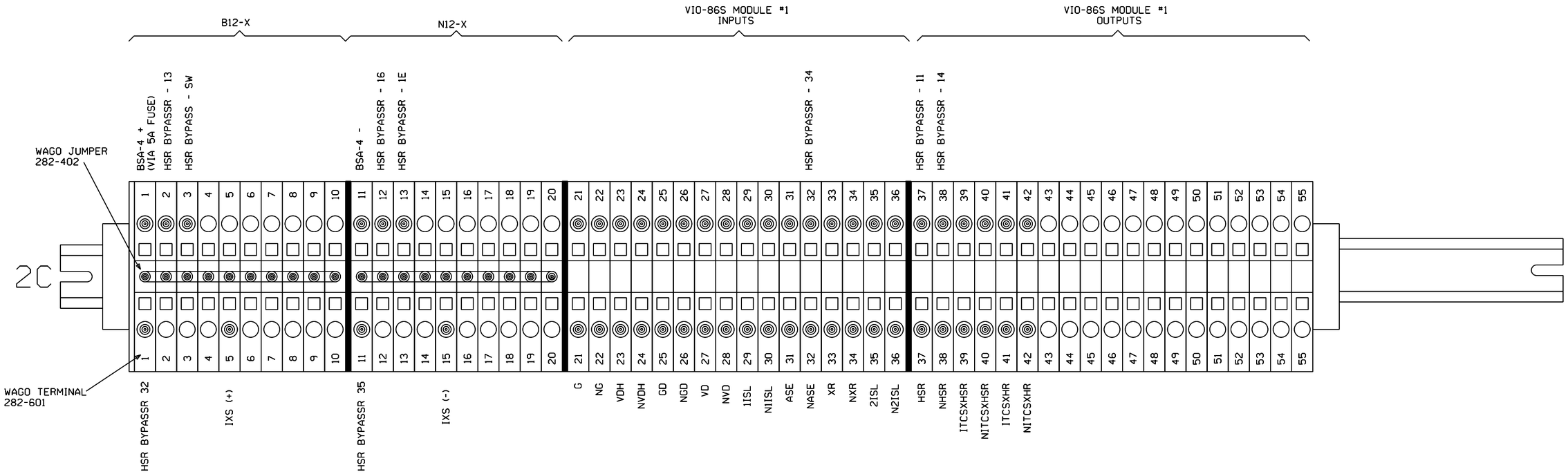

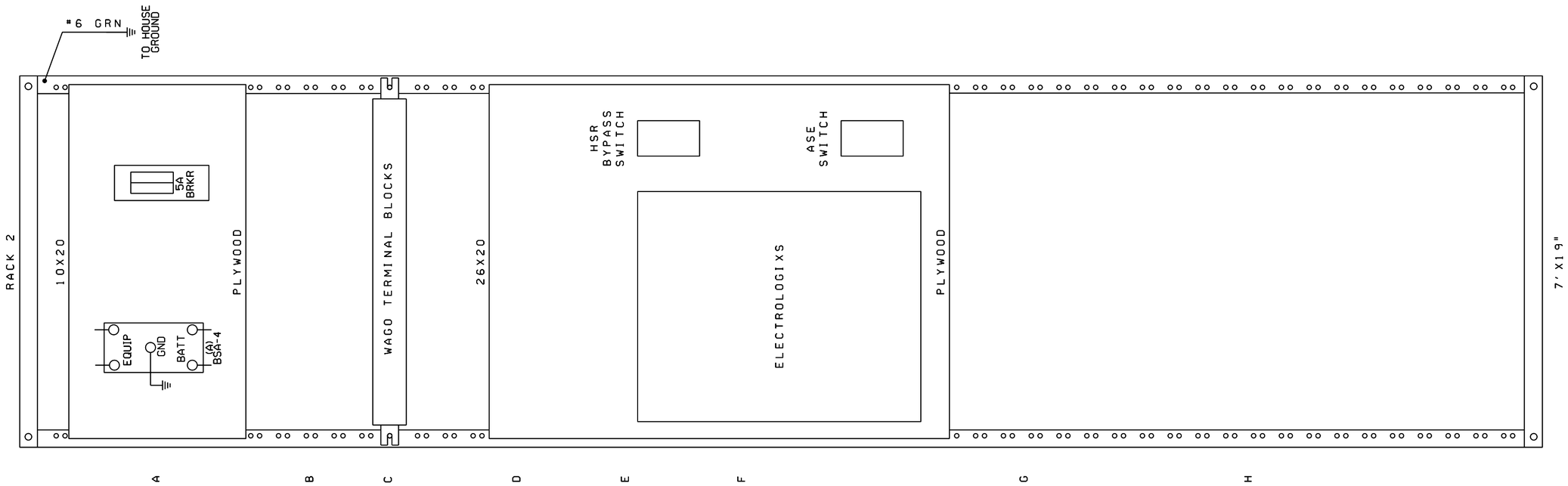

NEW SHEET

							Designed: 3/25/15 UPGRADE ELECTROLOGIXS AND DESIGN FOR FUTURE FIBER Rec*: WO*: 12780 IS: /NBT / / WIT/JVJ	CIRCUIT MODIFICATIONS ARE NOT TO BE MADE WITHOUT AUTHORITY FROM THE OFFICE OF SIGNAL DESIGN	DATE: 3/25/15 DES: WIT CHK: NBT A.F.E. 12780	UNION PACIFIC RAILROAD PONTIAC, ILLINOIS CLEARY AVENUE JOLIET SUBDIVISION Office of Sr AVP Engineering - Signal/TCO Omaha, Nebraska	SH. 10B DOT 290752W M.P. 91.65 ID= CSL9165.10BX

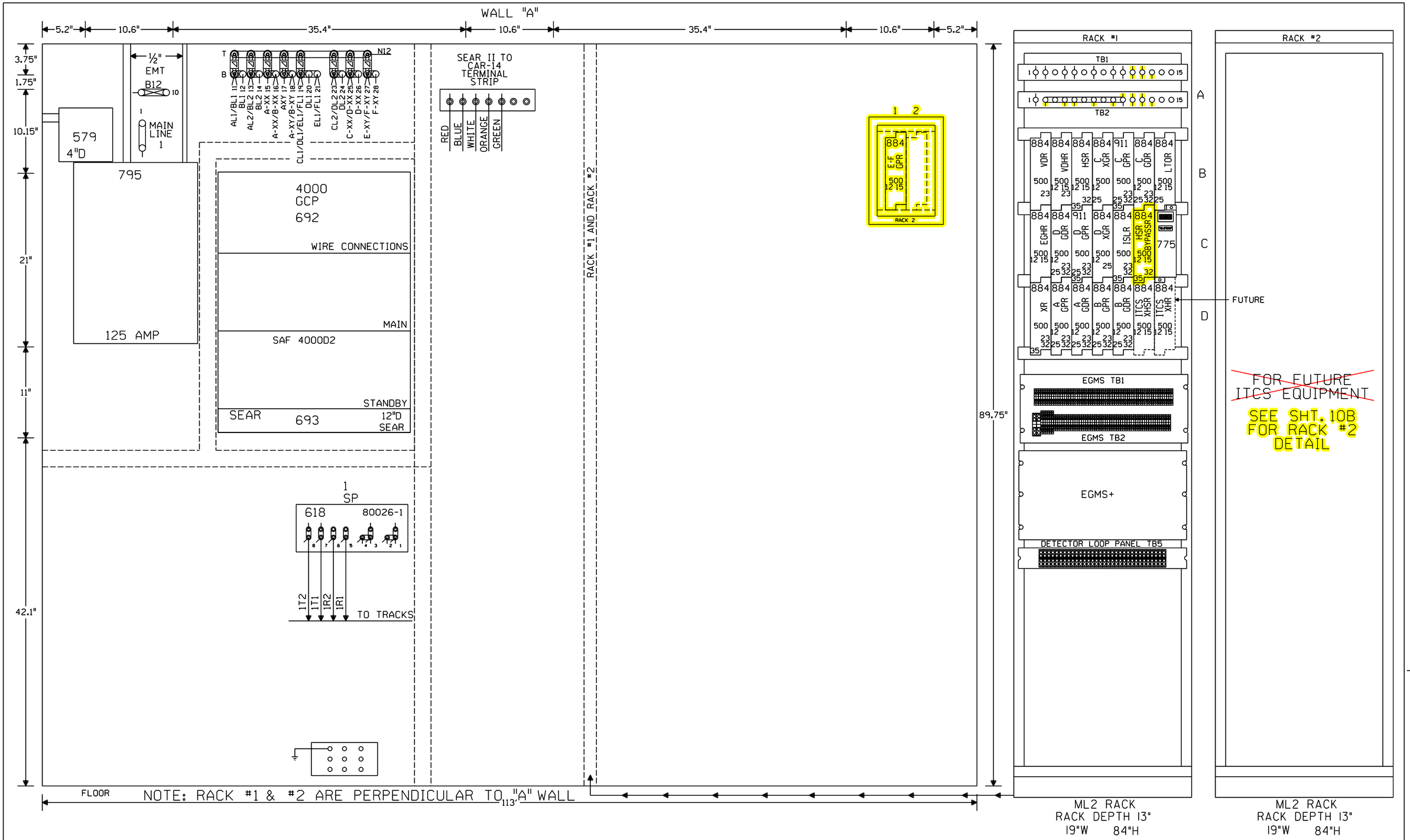

					Designed: 3/25/15 UPGRADE ELECTROLOGIXS AND DESIGN FOR FUTURE FIBER Rec#: WO#: 12780 IS: / /NBT / WIT/JVJ	Revised: 3/30/15 INSTALLED ACS AND UPGRADED THE XINGS FROM M.P. 90-95 WITH QUAD GATES AND EGMS. Rec#: 20776 WO#: 05751 IS: 2/3/14 /MWK JH/WIT/WIT/MJF	CIRCUIT MODIFICATIONS ARE NOT TO BE MADE WITHOUT AUTHORITY FROM THE OFFICE OF SIGNAL DESIGN	Date: 1/10/12 Des: WIT Chk: MWK AFE: 05751	UNION PACIFIC RAILROAD PONTIAC, ILLINOIS CLEARY AVENUE JOLIET SUBDIVISION Office of Sr AVP Engineering - Signal/TCO Omaha, Nebraska	Sh.: ~~10~~ 11 DOT 290752W MP: 91.65 ID: CSL9165.~~10X~~ 11X

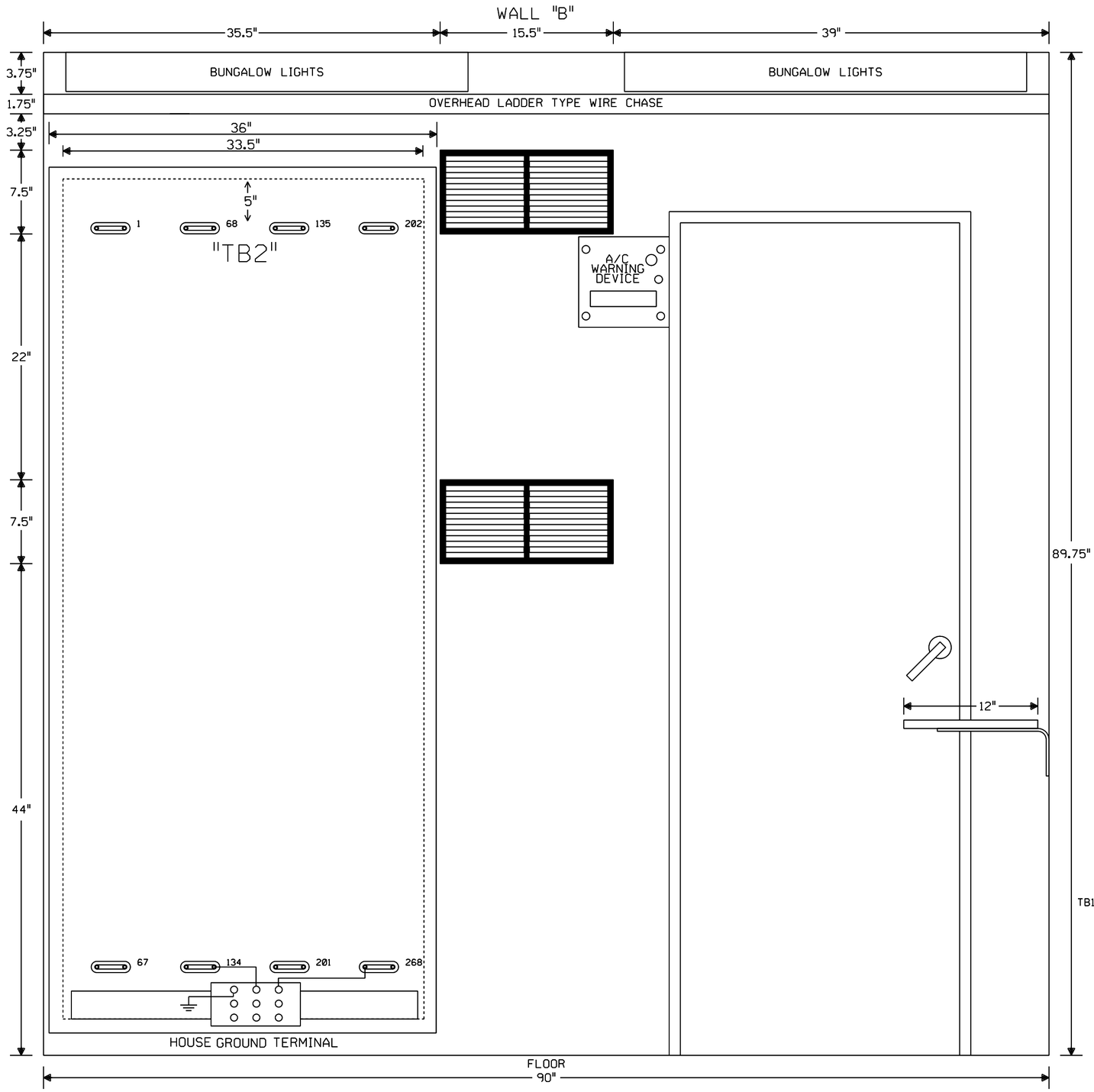

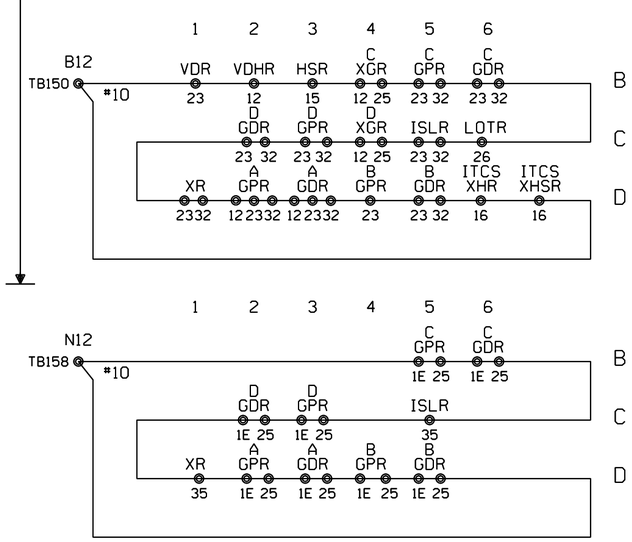

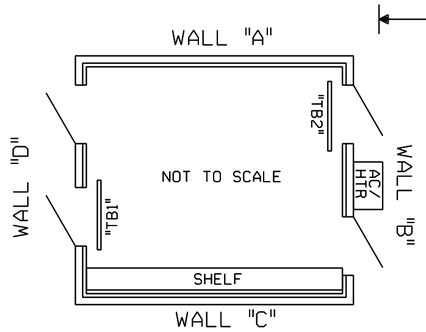

NOTE: ALL DIMENSIONS SHOWN ARE APPROXIMATE.

= IN

= OUT

					Designed: 3/25/15 UPGRADE ELECTROLOGIXS AND DESIGN FOR FUTURE FIBER Rec#: WO#: 12780 IS: /NBT / / WIT/JVJ	Revised: 3/30/15 INSTALLED ACS AND UPGRADED THE XINGS FROM M.P. 90-95 WITH QUAD GATES AND EGMS. Rec#: 20776 WO#: 05751 IS: 2/3/14 /MWK JH/WIT/WIT/MJF	CIRCUIT MODIFICATIONS ARE NOT TO BE MADE WITHOUT AUTHORITY FROM THE OFFICE OF SIGNAL DESIGN	Date: 1/10/12 Des: WIT Chk: MWK AFE: 05751	UNION PACIFIC RAILROAD PONTIAC, ILLINOIS CLEARY AVENUE JOLIET SUBDIVISION Office of Sr AVP Engineering - Signal/TCO Omaha, Nebraska	Sh.: ~~11~~ 12 DOT 290752W MP: 91.65 ID: CSL9165.~~11X~~ 12X

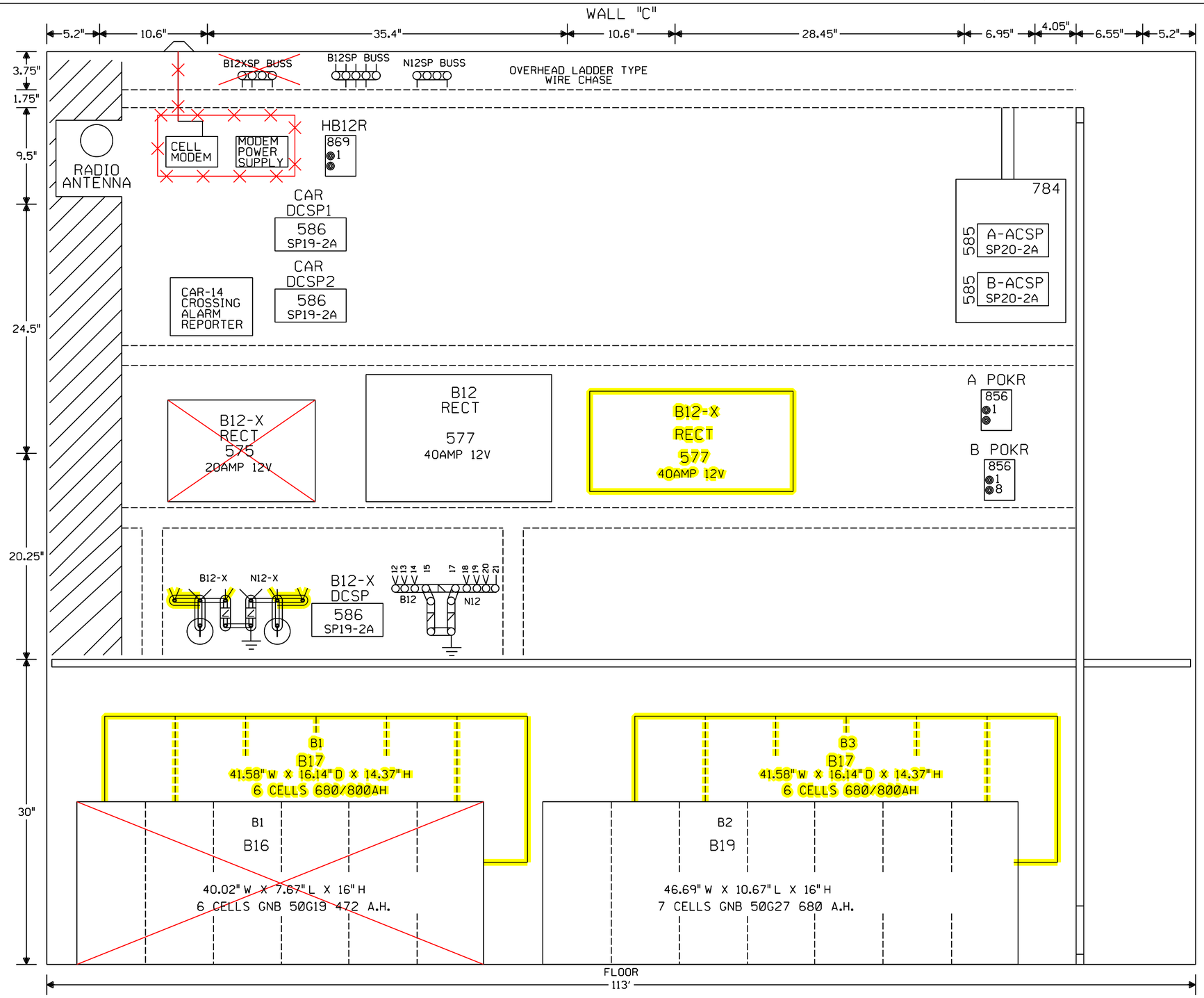

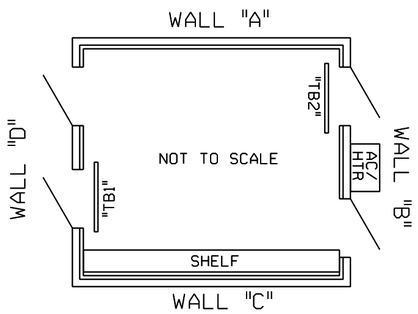

NOTE: ALL DIMENSIONS SHOWN ARE APPROXIMATE.

= IN

= OUT

= EXISTING/REVISE ORIGINALS IF A.C.'D

Designed: 3/25/15 UPGRADE ELECTROLOGIXS AND DESIGN FOR FUTURE FIBER Rec#: WO#: 12780 IS: /NBT / / WIT/JVJ	Revised: 3/30/15 INSTALLED ACS AND UPGRADED THE XINGS FROM M.P. 90-95 WITH QUAD GATES AND EGMS. Rec#: 20776 WO#: 05751 IS: 2/3/14 /MWK JH/WIT/WIT/MJF	CIRCUIT MODIFICATIONS ARE NOT TO BE MADE WITHOUT AUTHORITY FROM THE OFFICE OF SIGNAL DESIGN	Date: 1/10/12	UNION PACIFIC RAILROAD	Sh.: ~~12~~ 13
			Des: WIT	PONTIAC, ILLINOIS CLEARY AVENUE JOLIET SUBDIVISION	DOT 290752W
			Chk: MWK		MP: 91.65
			AFE: 05751	Office of Sr AVP Engineering - Signal/TCO Omaha, Nebraska	ID: CSL9165.1~~2X~~ 13X

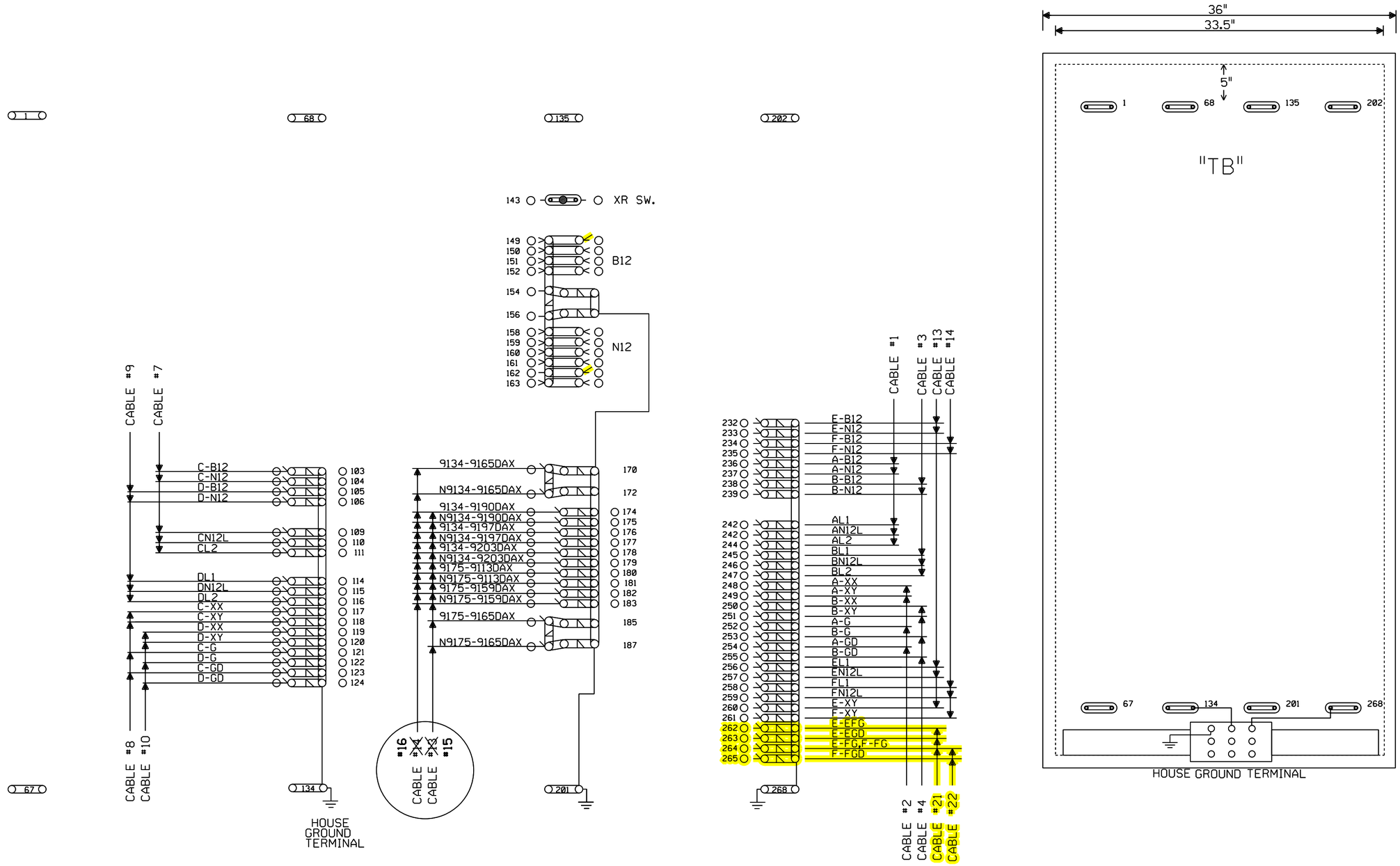

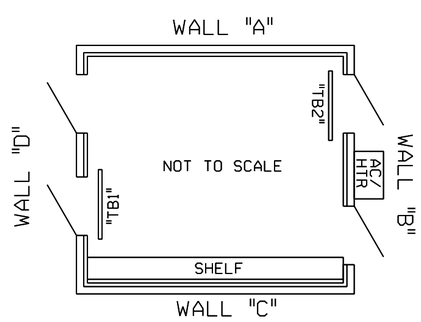

NOTE: ALL DIMENSIONS SHOWN ARE APPROXIMATE.

= IN

= OUT

= EXISTING/REVISE ORIGINALS IF A.C.'D

SEE SIGNAL STANDARD DRAWING 846120UP FOR HOUSE GROUNDING SCHEME

Designed: 3/25/15 UPGRADE ELECTROLOGIXS AND DESIGN FOR FUTURE FIBER Rec#: WO#: 12780 IS: / /NBT / WIT/JVJ	Revised: 3/30/15 INSTALLED ACS AND UPGRADED THE XINGS FROM M.P. 90-95 WITH QUAD GATES AND EGMS. Rec#: 20776 WO#: 05751 IS: 2/3/14 /MWK JH/WIT/WIT/MJF	CIRCUIT MODIFICATIONS ARE NOT TO BE MADE WITHOUT AUTHORITY FROM THE OFFICE OF SIGNAL DESIGN	Date: 1/10/12 Des: WIT Chk: MWK AFE: 05751	UNION PACIFIC RAILROAD PONTIAC, ILLINOIS CLEARY AVENUE JOLIET SUBDIVISION Office of Sr AVP Engineering - Signal/TCO Omaha, Nebraska	Sh.: ~~13~~ 14 DOT 290752W MP: 91.65 ID: CSL9165.~~13X~~ 14X

Minimum Program Steps Report

Location and SIN

DOT Number: 290752W
Milepost Number: 91.65
Site Name: Pontiac, IL

SIN: 762010010016 *

* Parameter is part of office check number calculation.

MCF and Template Selection

MCF Name: GCP-T6X-02-4.mcf
MCF Revision: 24
MCFCRC: 09FC363B
UCN: FFFFFFFF

Template = 1A:6 Trk Bi (OCCN) *

* Parameter is part of office check number calculation.

Minimum Program Steps

TEMPLATE: module configuration
Track 5/RIO 2 Slot = RIO (OCCN) *
Track 6/RIO 3 Slot = RIO (OCCN) *

TEMPLATE: track 1-Bi, Island
Track 1 : GCP Frequency = 525 Hz (Field,TCN)
Track 1 : Approach Distance = 1615 ft (Set in Field,TCN)
Track 1 : Prime Warning Time = 36 sec (OCCN) *
Track 1 : Prime UAX = IP (OCCN) *
Track 1 : Prime UAX Pickup = 15 sec (OCCN) *
Track 1 : GCP Transmit Level = Medium (Set in Field,TCN)
Track 1 : Isl Frequency = 11.5 kHz (Set in Field)

TEMPLATE: AND 1 XR
AND 1 Enable Used = Yes (OCCN) *

TEMPLATE: SSCC
SSCC-2 Number of GPs = 2 (OCCN) *
SSCC-2 Number of GDs = 2 (OCCN) *
SSCC 1 : Lamp Neutral Test = Off (Set in Field)
SSCC 2 : Lamp Neutral Test = Off (Set in Field)

TEMPLATE: OOS
OOS Control = OOS IPs (OCCN) *

TEMPLATE: OP assignment 1
OUT 1.1 = AND 1 XR (OCCN) *
OUT 1.2 = T1 Island (OCCN) *

TEMPLATE: IP assignment 1
IN 1.1 = AND 1 XR Enable (OCCN) *
IN 1.2 = Out Of Service IP 1 (OCCN) *

TEMPLATE: IP assignment 2
IN 5.2 = GP 1.1 (OCCN) *
IN 6.1 = T1 Prime UAX (OCCN) *
IN 6.2 = T1 Prime UAX (OCCN) *

```
TEMPLATE:  IP assignment SSCC
IN 7.1 = AND 1 XR Enable (OCCN) *
IN 8.2 = GD 2.2 (OCCN) *
IN 8.3 = GP 2.2 (OCCN) *
IN 8.4 = GD 2.1 (OCCN) *
IN 8.5 = GP 2.1 (OCCN) *

TEMPLATE:  SEAR
SP 3.1 = General 3 (OCCN) *
SP 4.1 = General 4 (OCCN) *

GCP:  track 1
Track 1 : Island Distance = 127 ft (Set in Field,TCN)

ISLAND:  track 1
Track 1 : Pickup Delay (2s +) = 2 sec (OCCN) *

ADVANCED:  site options
Daylight Savings = Off (Set in Field)

SSCC
Bell On Gate Rising = Yes (OCCN) *

SEAR:  slot 1-4 inputs
IN 2.1 = General 2 (OCCN) *
IN 2.2 = General 1 (OCCN) *
IN 3.2 = Vehicle Det Hlth (OCCN) *
IN 4.1 = General 3 (OCCN) *
IN 4.2 = 3 Vehicle Detect (OCCN) *

SEAR:  inputs slot 5
IN 5.3 = General 1 (OCCN) *
IN 5.4 = General 2 (OCCN) *

* Parameter is part of office check number calculation.

Check Numbers
-------------
Office Check Number: 56B4A727
Config. Check Number: 4ADFD646
(Based on MCF Revision 24)

Parameters not part of office check number calculation:

Track 1 : GCP Frequency = 525 Hz
Track 1 : Approach Distance = 1615 ft (Set in Field)
Track 1 : GCP Transmit Level = Medium (Set in Field)
Track 1 : Isl Frequency = 11.5 kHz
SSCC 1 : Lamp Neutral Test = Off (Set in Field)
SSCC 2 : Lamp Neutral Test = Off (Set in Field)
Track 1 : Island Distance = 127 ft (Set in Field)
Daylight Savings = Off (Set in Field)

Comments
--------
<none>

Configuration Package File
--------------------------
Filename: CSL9165_290752W.pac
Path: C:\PAC File\
Date/Time: 4/25/2016 10:15:26
```