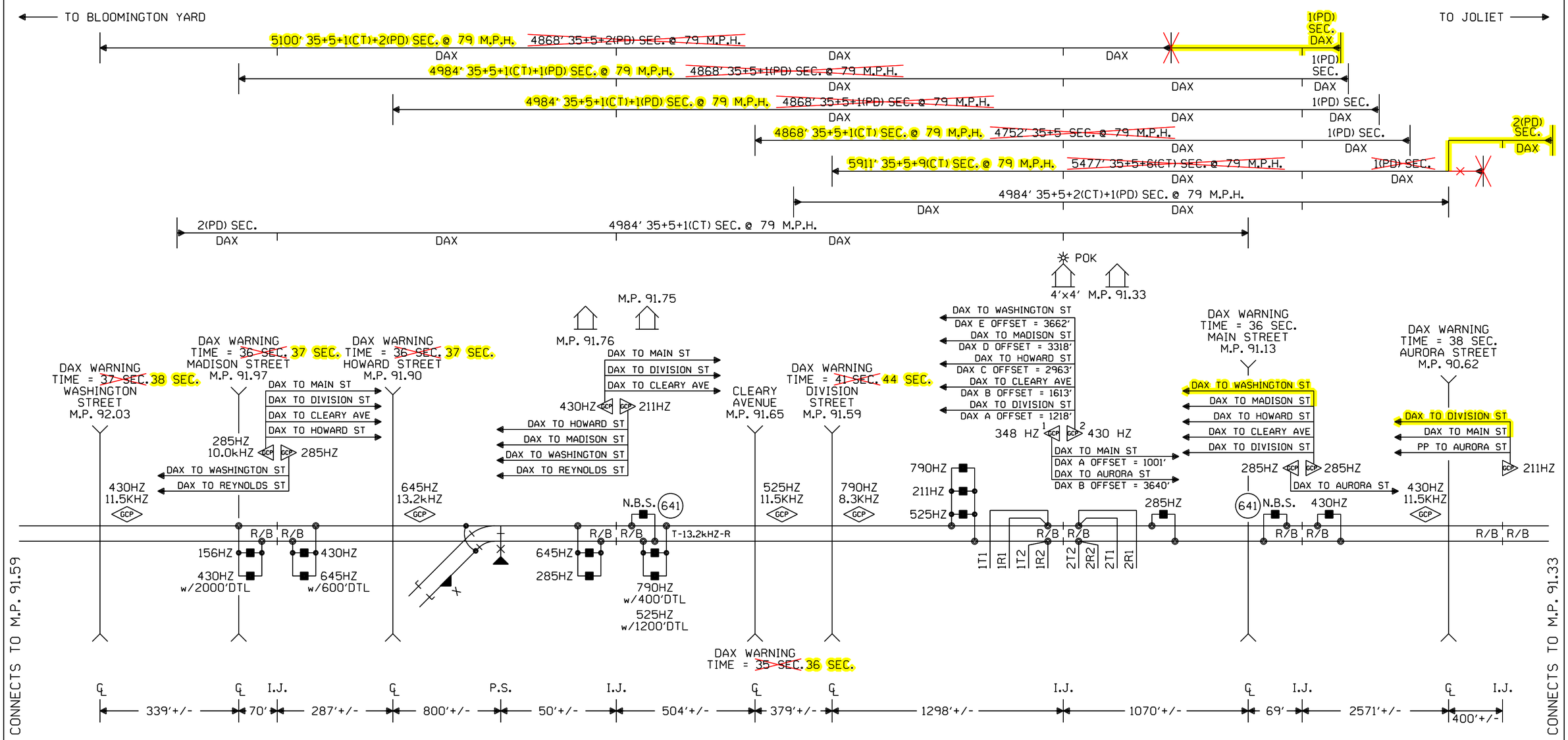

NOTES:

⊗ = TWISTED WIRES
ALL TRACK WIRES 2C. #6
INSULATED 1 TWIST PER FT.

TRANSMITTER AND RECEIVER LEADS
TO BE SEPARATED BY AT LEAST 12" IN TRENCH,
LENGTHS SHOULD NOT EXCEED MANUFACTURES
RECOMMENDATION.

ALL BUNGALOW WIRING TO BE #16 AWG FLEX
UNLESS OTHERWISE SPECIFIED EXCEPT ALL GROUND
WIRE TO BE #6 AWG FLEX OR LARGER.

REFER TO UP STANDARD DWG. FOR BUNGALOW
GROUNDING.

PORTABLE GENERATOR EXTENSION CORD
FOR 240V TO 240V IS PROVIDED AS WELL
AS A 120V TO 240V ADAPTER.

W(S) ◄——○——► E(N)

——— = IN
-×-×-×- = OUT

Designed: 3/25/15 UPGRADE ELECTROLOGIXS AND DESIGN FOR FUTURE FIBER Rec#: WO#: 12780 IS: /NBT / /WIT/JVJ	Revised: 3/30/15 INSTALLED ACS AND UPGRADED THE XINGS FROM M.P. 90-95 WITH QUAD GATES AND EGMS. Rec#: 20776 WO#: 05751 IS: 2/3/14 /MWK JH/WIT/WIT/MJF	MODIFICATION LEVEL	
		Q. A. LAST LEVEL CHECKED	DU
		LAST LEVEL MOD THIS TYPICAL	DU
		LAST LEVEL BY DESIGNER	DU
		CHANGED FROM TYPICAL?	Y
		Rev 01.24.11 4K REMOTE.1	

CIRCUIT MODIFICATIONS ARE NOT TO BE MADE WITHOUT AUTHORITY FROM THE OFFICE OF SIGNAL DESIGN

Date: 1/10/12
Des: WIT
Chk: MWK
AFE: 05751

UNION PACIFIC RAILROAD
PONTIAC, ILLINOIS
REMOTE LOCATION
JOLIET SUBDIVISION
Office of Sr AVP Engineering - Signal/TCO Omaha, Nebraska

Sh.: 1
DOT 000000R
MP: 91.34
ID: CSL9134.1X

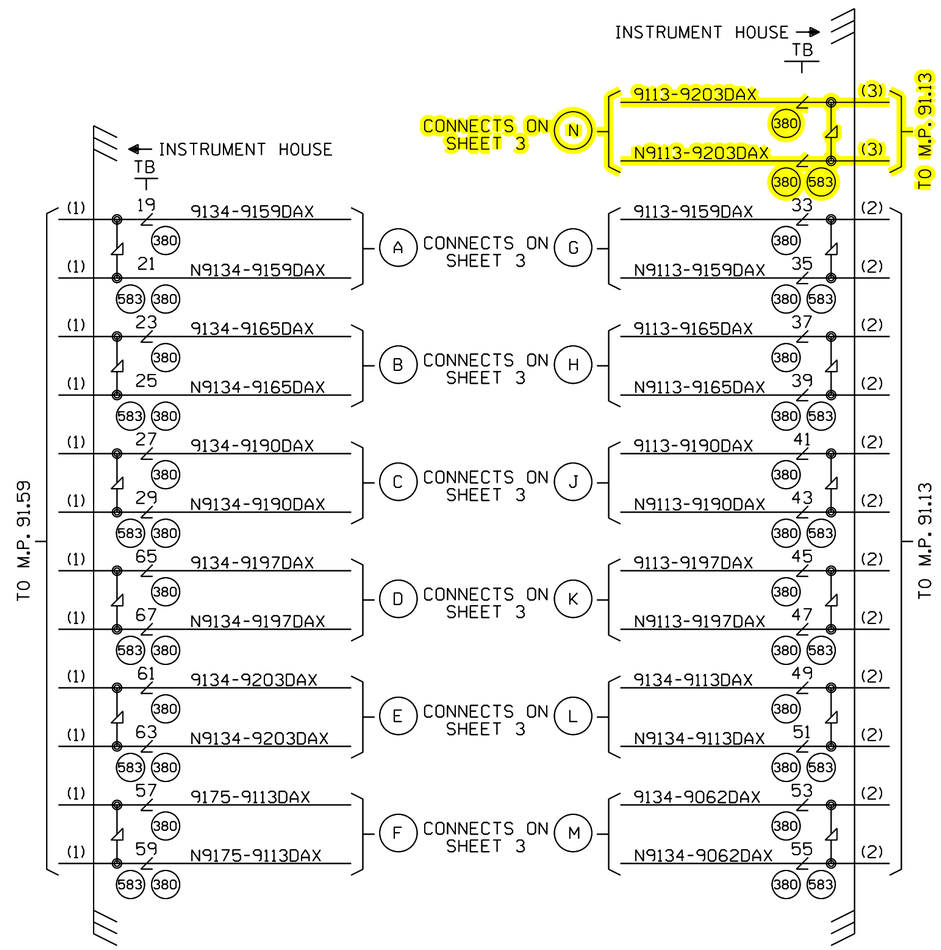

= IN

= OUT

CABLE TABULATION

CABLE #1 12C #14 U.G.B.T. HOUSE TO M.P. 91.59
CABLE #2 12C #14 U.G.B.T. HOUSE TO M.P. 91.13
CABLE #3 7C #14 U.G.B.T. HOUSE TO M.P. 91.13

Designed: 3/25/15
UPGRADE ELECTROLOGIXS AND DESIGN FOR FUTURE FIBER
Rec#: WO#: 12780
IS: /NBT
/ /WIT/JVJ

Revised: 3/30/15
INSTALLED ACS AND UPGRADED THE XINGS FROM M.P. 90-95 WITH QUAD GATES AND EGMS.
Rec#: 20776 WO#: 05751
IS: 2/3/14 /MWK
JH/WIT/WIT/MJF

MODIFICATION LEVEL	
Q.A. LAST LEVEL CHECKED	DU
LAST LEVEL MOD THIS TYPICAL	DU
LAST LEVEL BY DESIGNER	DU
CHANGED FROM TYPICAL?	Y

REV 01.24.11 4K REMOTE.1

CIRCUIT MODIFICATIONS ARE NOT TO BE MADE WITHOUT AUTHORITY FROM THE OFFICE OF SIGNAL DESIGN

Date: 1/10/12
Des: WIT
Chk: MWK
AFE: 05751

UNION PACIFIC RAILROAD
PONTIAC, ILLINOIS
REMOTE LOCATION
JOLIET SUBDIVISION
Office of Sr AVP Engineering - Signal/TCO Omaha, Nebraska

Sh.: 1A
DOT 000000R
MP: 91.34
ID: CSL9134.1AX

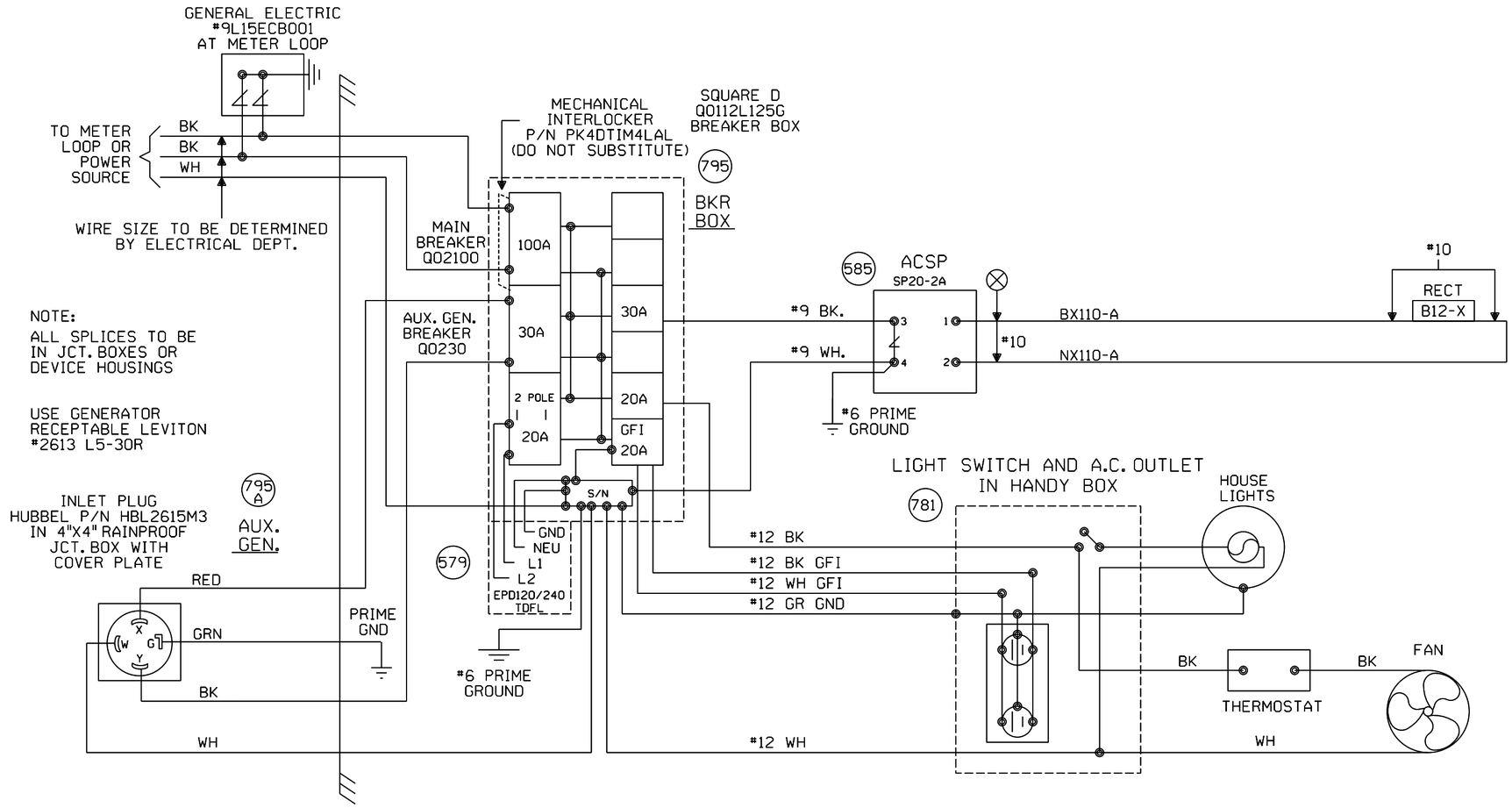

PONTIAC, ILLINOIS
REMOTE GCP LOCATION
M.P. 91.34
JOLIET SUBDIVISION

					REV. 2-20-08 UPGRADED CROSSING PROTECTION FOR THE HIGH SPEED RAIL PROJ. FROM MAZONIA TO SPRINGFIELD. AFE 00443 REC# 14411 I.S. 3-9-06 JJF GNT/WITT/WITT/JNM	MODIFICATION LEVEL		CIRCUIT MODIFICATIONS ARE NOT TO BE MADE WITHOUT AUTHORITY FROM THE OFFICE OF SIGNAL DESIGN	DES: WITT.IND.	UNION PACIFIC RAILROAD JOLIET, ILLINOIS TO BLOOMINGTON, ILLINOIS C.T.C. CIRCUITS	DATE 11-20-01
						Q.A. LAST LEVEL CHK'D.	DD		DIG: WITT.IND.		SHEET 2
						LAST LEVEL MOD. THIS TYP.	DB		CHK: J.J.F.		DWG 91.34
						LAST LEVEL BY DESIGNER.	DD		A.F.E. 00443		RTE-CSL
						CHANGED FROM TYP.? Y/N	N		ID= CSL9134.2X	OFFICE OF CHIEF ENG'R OMAHA NEBR.	

(REV. 2-7-01) (REMOTE.2)

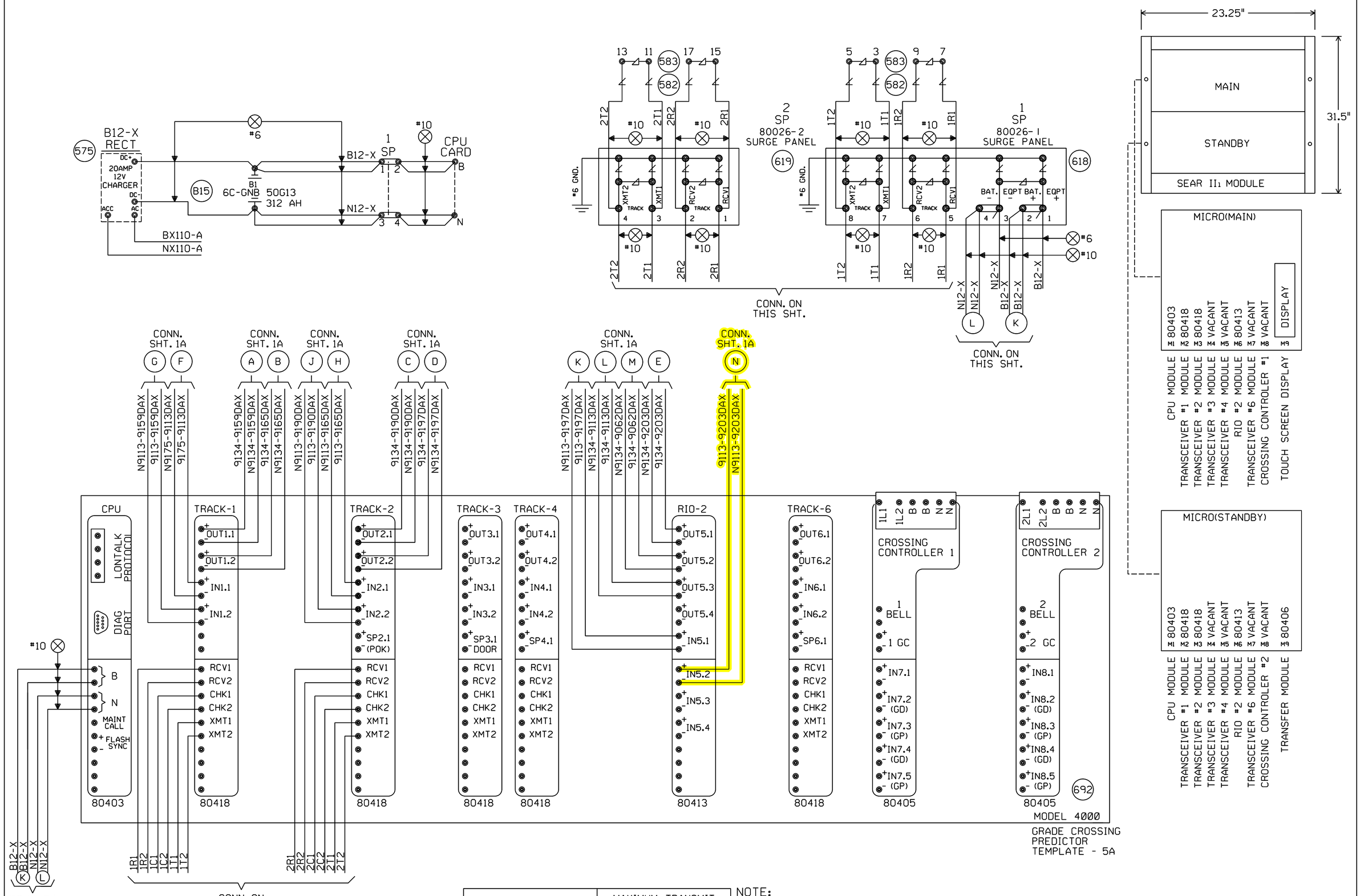

"Mf" FREQUENCY (HZ)	MAXIMUM TRANSMIT WIRE LENGTH (FEET)
86	100
114	125
156	150
211	200
285-970	250

NOTE:
EACH TRANSMITTER TO RAIL WIRE FROM XMT1 AND XMT2 MUST NOT EXCEED THE MAXIMUM LENGTH SPECIFIED IN THE TABLE SHOWN. THE RECEIVER WIRE LENGTH IS NOT CRITICAL. DOES NOT APPLY TO 6 TRACK WIRE APPLICATION.

Designed: 3/25/15
UPGRADE ELECTROLOGIXS AND DESIGN FOR FUTURE FIBER
Rec*: WO*: 12780
IS: /NBT / / WIT/JVJ

Revised: 3/30/15
INSTALLED ACS AND UPGRADED THE XINGS FROM M.P. 90-95 WITH QUAD GATES AND EGMS.
Rec*: 20776 WO*: 05751
IS: 2/3/14 /MWK
JH/WIT/WIT/MJF

MODIFICATION LEVEL	
Q. A. LAST LEVEL CHECKED	DU
LAST LEVEL MOD THIS TYPICAL	DU
LAST LEVEL BY DESIGNER	DU
CHANGED FROM TYPICAL?	Y

Rev 01.24.11 4K 2TKEGMS.3

CIRCUIT MODIFICATIONS ARE NOT TO BE MADE WITHOUT AUTHORITY FROM THE OFFICE OF SIGNAL DESIGN

Date: 1/10/12
Des: WIT
Chk: MWK
AFE: 05751

UNION PACIFIC RAILROAD

PONTIAC, ILLINOIS
REMOTE LOCATION
JOLIET SUBDIVISION

Office of Sr AVP Engineering - Signal/TCO Omaha, Nebraska

Sh.: 3
DOT 000000R
MP: 91.34
ID: CSL9134.3X

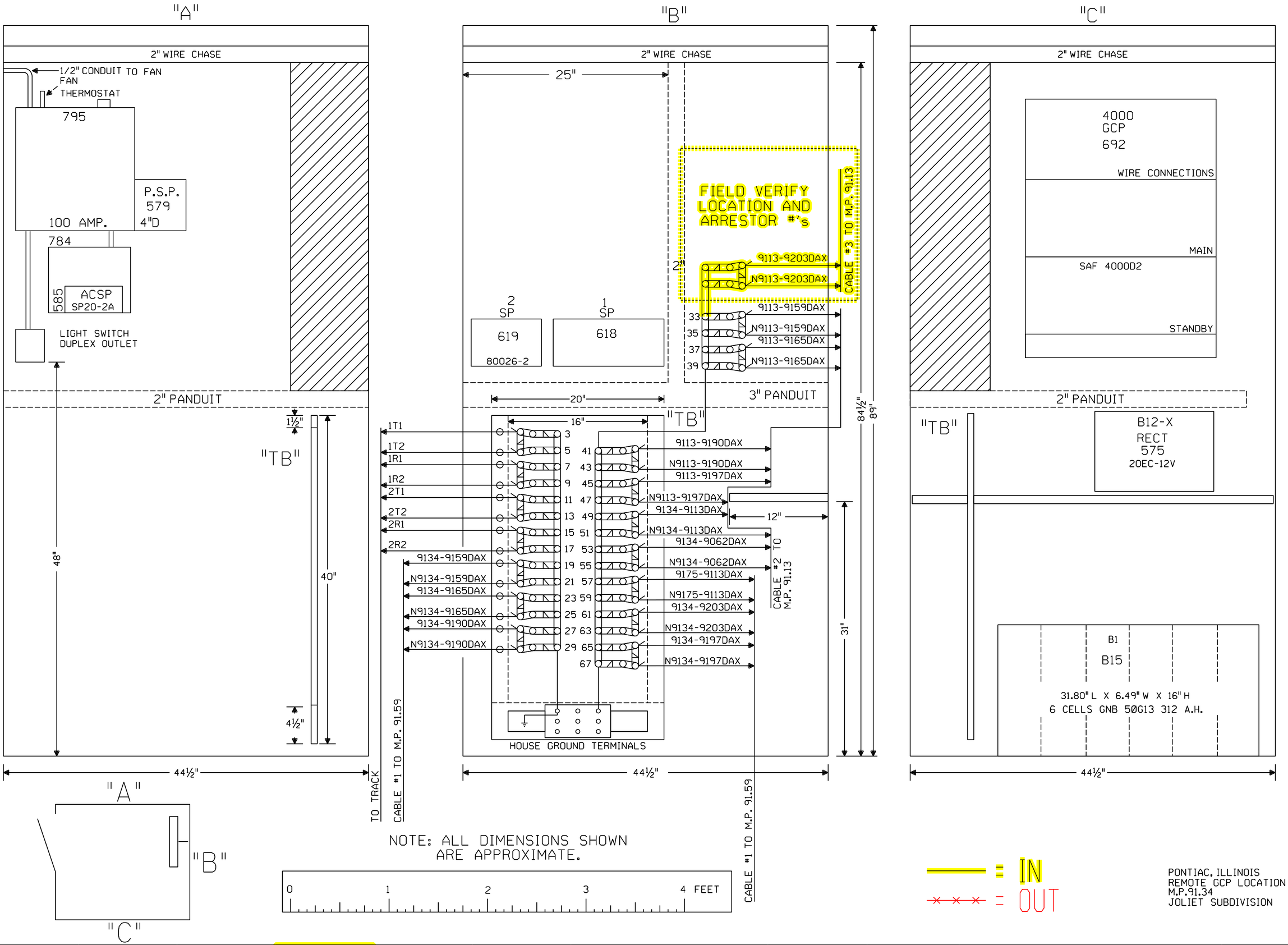

Designed: 3/25/15
UPGRADE ELECTROLOGIXS AND DESIGN FOR FUTURE FIBER
Rec#: WO#: 12780
IS: /NBT / / WIT/JVJ

Revised: 3/30/15
INSTALLED ACS AND UPGRADED THE XINGS FROM M.P. 90-95 WITH QUAD GATES AND EGMS.
Rec#: 20776 WO#: 05751
IS: 2/3/14 /MWK JH/WIT/WIT/MJF

REV. 2-20-08
UPGRADED CROSSING PROTECTION FOR THE HIGH SPEED RAIL PROJ. FROM MAZONIA TO SPRINGFIELD.
AFE 00443
REC# 14411
I.S. 3-9-06 JJF
GNT/WITT/WITT/JNM

MODIFICATION LEVEL	
Q.A. LAST LEVEL CHK'D.	DD
LAST LEVEL MOD. THIS TYP.	DB
LAST LEVEL BY DESIGNER.	DD
CHANGED FROM TYP.? Y/N	Y

CIRCUIT MODIFICATIONS ARE NOT TO BE MADE WITHOUT AUTHORITY FROM THE OFFICE OF SIGNAL DESIGN

DES: WITT.IND.
DIG: WITT.IND.
CHK: J.J.F.
A.F.E. 00443
ID= CSL9134.4X

UNION PACIFIC RAILROAD
JOLIET, ILLINOIS TO
BLOOMINGTON, ILLINOIS
C.T.C. CIRCUITS
OFFICE OF CHIEF ENG'R OMAHA NEBR.

DATE 11-20-01
SHEET 4
DWG 91.34
RTE-CSL

(REV. 2-7-01) (GCPRMOTE.4)

Minimum Program Steps Report

Location and SIN

DOT Number: 000000R
Milepost Number: 91.34
Site Name: REMOTE Pontiac IL

SIN: 762010010016 *

* Parameter is part of office check number calculation.

MCF and Template Selection

MCF Name: GCP-T6X-02-1.mcf
MCF Revision: 021
MCFCRC: 6076E435

Template = 5A:3 Remote pairs *

* Parameter is part of office check number calculation.

Minimum Program Steps

BASIC: module configuration
Track 5/RIO 2 Slot = RIO *

PREDICTORS: track 1
Track 1 : Dax B Used = Yes *

PREDICTORS: track 2
Track 2 : Dax B Used = Yes *
Track 2 : Dax C Used = Yes *
Track 2 : Dax D Used = Yes *
Track 2 : Dax E Used = Yes *

GCP: track 1
Track 1 : GCP Frequency = 348 Hz *
Track 1 : Approach Distance = 2190 ft *
Track 1 : GCP Transmit Level = High *
Track 1 : Computed Distance = 2426 ft *

GCP: track 1 Dax A
Track 1 : Dax A Warning Time = 36 sec *
Track 1 : Dax A Offset Distance = 1001 ft *
Track 1 : Switch MS EZ Level = 70 *

GCP: track 1 Dax B
Track 1 : Dax B Warning Time = 38 sec *
Track 1 : Dax B Offset Distance = 3640 ft *

GCP: track 2
Track 2 : GCP Frequency = 430 Hz *
Track 2 : Approach Distance = 1150 ft *
Track 2 : GCP Transmit Level = High *
Track 2 : Computed Distance = 1308 ft *
Track 2 : Linearization Steps = 111 *

GCP: track 2 Dax A
Track 2 : Dax A Warning Time = 44 sec *
Track 2 : Dax A Offset Distance = 1239 ft *

```
GCP:  track 2 Dax B
Track 2 : Dax B Warning Time = 36 sec *
Track 2 : Dax B Offset Distance = 1613 ft *

GCP:  track 2 Dax C
Track 2 : Dax C Warning Time = 37 sec *
Track 2 : Dax C Offset Distance = 2963 ft *

GCP:  track 2 Dax D
Track 2 : Dax D Warning Time = 37 sec *
Track 2 : Dax D Offset Distance = 3318 ft *

GCP:  track 2 Dax E
Track 2 : Dax E Warning Time = 38 sec *
Track 2 : Dax E Offset Distance = 3662 ft *

AND:  track Anding
AND 2 Used = Yes *
AND 3 Used = Yes *
AND 4 Used = Yes *
AND 5 Used = Yes *
AND 6 Used = Yes *

AND:  AND 1 XR
AND 1 XR Track 2 = Dax A *
AND 1 Enable Used = Yes *

AND:  AND 2
AND 2 Track 2 = Dax B *
AND 2 Enable Used = Yes *

AND:  AND 3
AND 3 Track 2 = Dax C *
AND 3 Enable Used = Yes *

AND:  AND 4
AND 4 Track 2 = Dax D *
AND 4 Enable Used = Yes *

AND:  AND 5
AND 5 Track 1 = Dax A *
AND 5 Enable Used = Yes *

AND:  AND 6
AND 6 Track 2 = Dax E *
AND 6 Enable Used = Yes *

OUTPUT:  assignment page 1
OUT 1.1 = AND 1 XR *
OUT 1.2 = AND 2 *
OUT 2.1 = AND 3 *
OUT 2.2 = AND 4 *

OUTPUT:  assignment page 2
OUT 5.1 = AND 6 *
OUT 5.2 = T1 Dax B *
OUT 5.3 = AND 5 *

INPUT:  assignment page 1
IN 1.1 = AND 5 Enable *
IN 1.2 = AND 1 XR Enable *
IN 2.1 = AND 2 Enable *
IN 2.2 = AND 3 Enable *
```

```
INPUT:  assignment page 2
IN 5.1 = AND 4 Enable *
IN 5.2 = AND 6 Enable *

* Parameter is part of office check number calculation.

Check Numbers
-------------
Office Check No. (DT 4.6.0): 3189DE1F
Office Check Number: 3189DE1F
Config. Check Number: 1C45E761
(Based on MCF Revision 021)

Parameters not part of office check number calculation:


Comments
--------
<none>

Configuration Package File
--------------------------
Filename: CSL9134_000000R.pac
Path: C:\PAC File\
Date/Time: 5/25/2016 10:50:40
DT Version: 5.7.3
```