GRIGGSVILLE

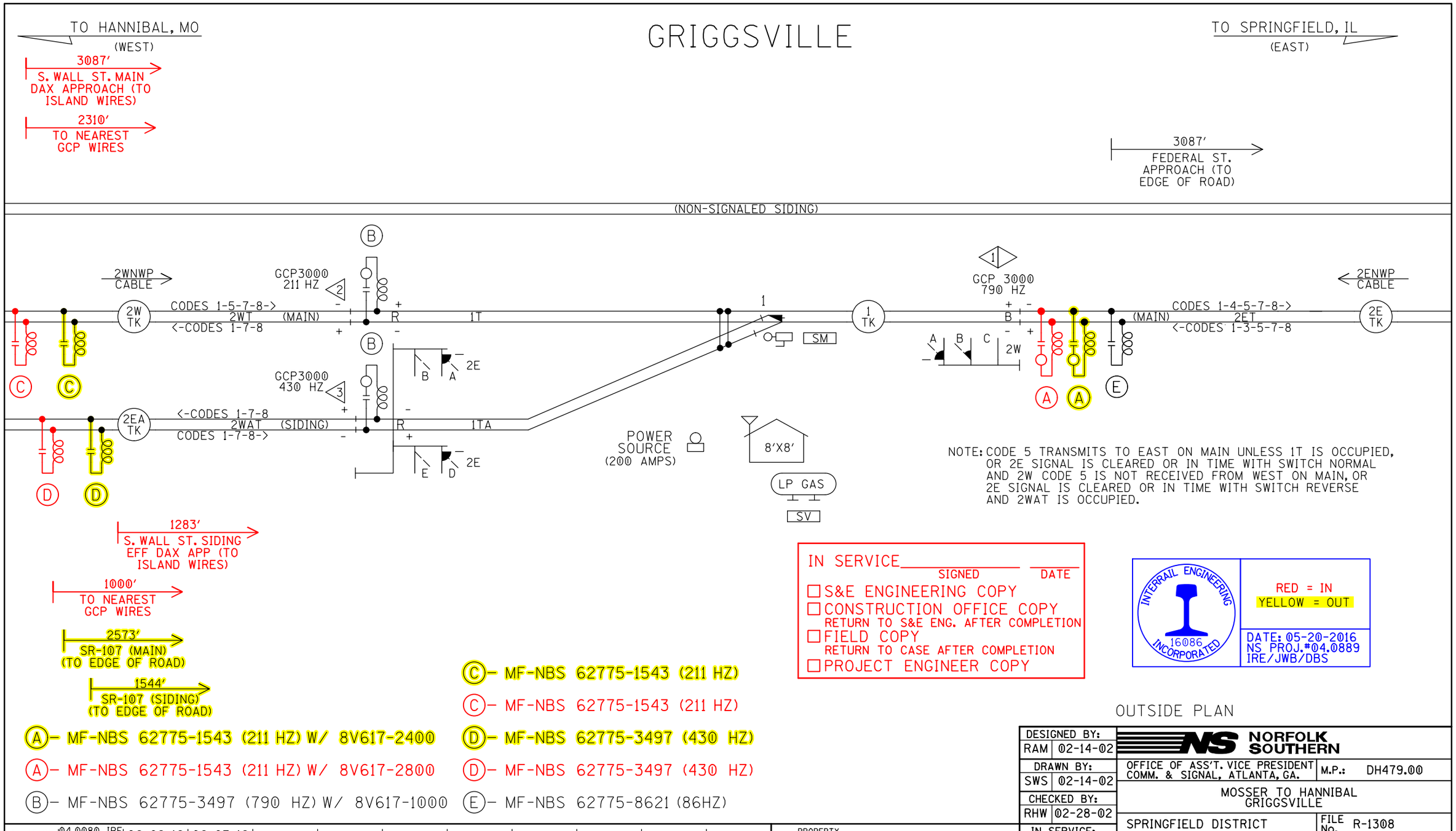

OUTSIDE PLAN

DESIGNED BY: RAM 02-14-02	NORFOLK SOUTHERN		
DRAWN BY: SWS 02-14-02	OFFICE OF ASS'T. VICE PRESIDENT COMM. & SIGNAL, ATLANTA, GA.	M.P.: DH479.00	
CHECKED BY: RHW 02-28-02	MOSSER TO HANNIBAL GRIGGSVILLE		
IN SERVICE: DLE 09-08-03	SPRINGFIELD DISTRICT	FILE No. R-1308	
	CADD or DWG. No. SFDH47900.01	SHEET No. 1 of 35	

REVISION	04.0080 IRE	06-02-16	06-07-16
INITIALS	08-09-08 KRC/NS	IRE/JWB	IRE/JWB

PROPERTY
NORFOLK SOUTHERN RAILWAY CO.

WESTWARD

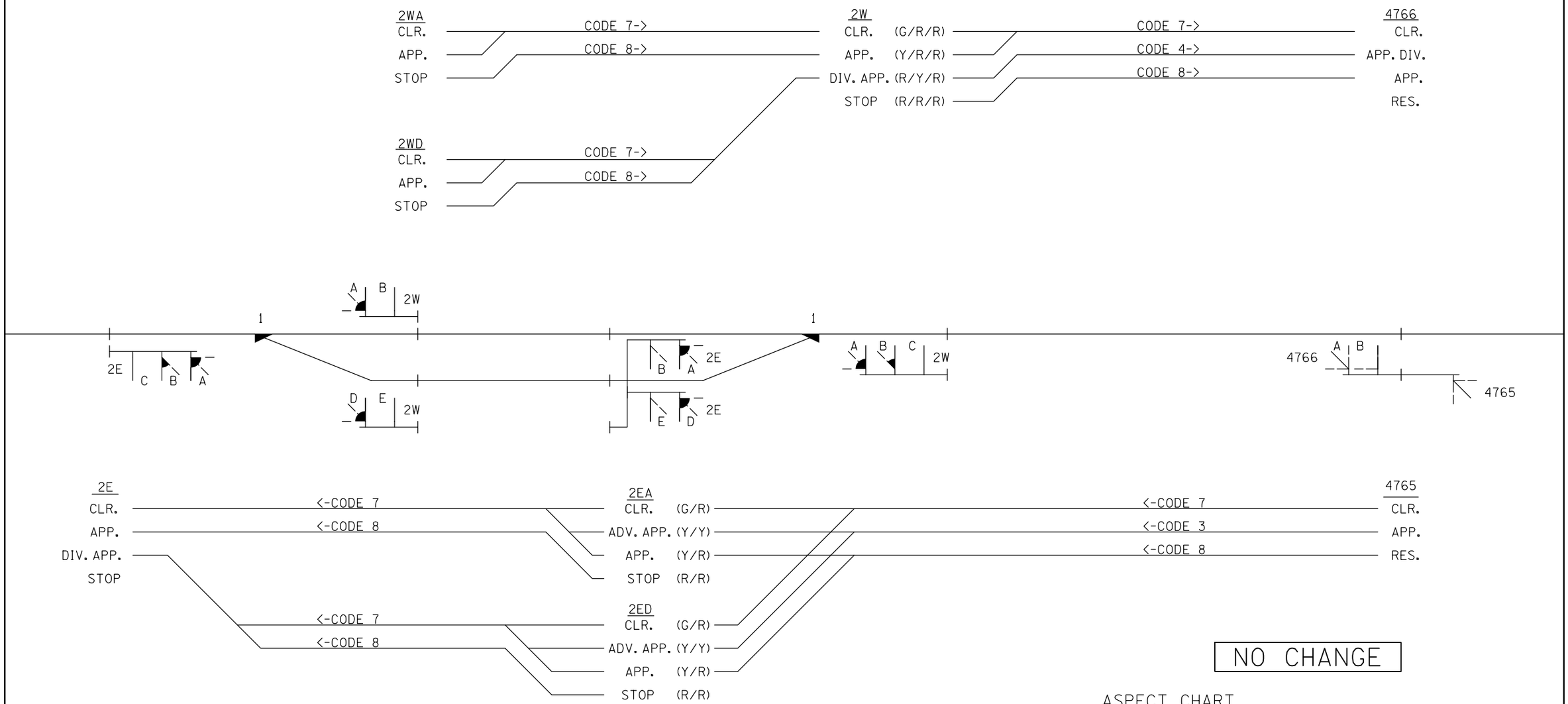

NO CHANGE

ASPECT CHART

EASTWARD

REVISION	06-07-16
INITIALS	IRE/JWB

PROPERTY
NORFOLK SOUTHERN RAILWAY CO.

DESIGNED BY:	
RAM	02-14-02
DRAWN BY:	
SWS	02-14-02
CHECKED BY:	
RHW	02-28-02
IN SERVICE:	
DLE	09-08-03

NORFOLK SOUTHERN

OFFICE OF ASS'T. VICE PRESIDENT COMM. & SIGNAL, ATLANTA, GA.

M.P.: DH479.00

MOSSER TO HANNIBAL
GRIGGSVILLE

SPRINGFIELD DISTRICT

FILE No. R-1308

CADD or DWG. No. SFDH47900.02

SHEET No. 2 of 35

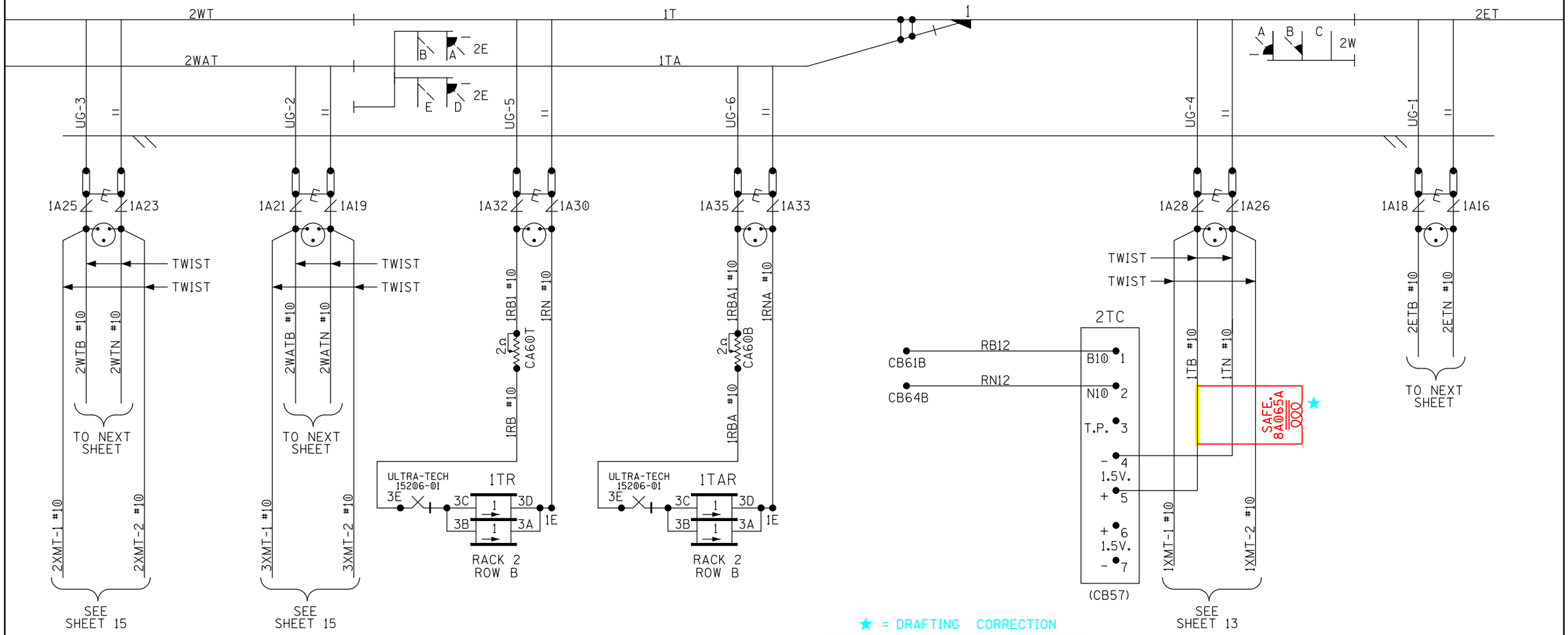

★ = DRAFTING CORRECTION

INTERRAIL ENGINEERING 16086 INCORPORATED

RED = IN
YELLOW = OUT

DATE: 05-20-2016
NS PROJ.#04.0889
IRE/JWB/DBS

TRACK CIRCUITS

DESIGNED BY: RAM 02-14-02	NORFOLK SOUTHERN	
DRAWN BY: SWS 02-14-02	OFFICE OF ASS'T. VICE PRESIDENT COMM. & SIGNAL, ATLANTA, GA.	M.P.: DH479.00
CHECKED BY: RHW 02-28-02	MOSSER TO HANNIBAL GRIGGSVILLE	
IN SERVICE: DLE 09-08-03	SPRINGFIELD DISTRICT	FILE No. R-1308
	CADD or DWG. No. SFDH47900.03	SHEET No. 3 of 35

REVISION	06-07-16
INITIALS	IRE/JWB

PROPERTY
NORFOLK SOUTHERN RAILWAY CO.

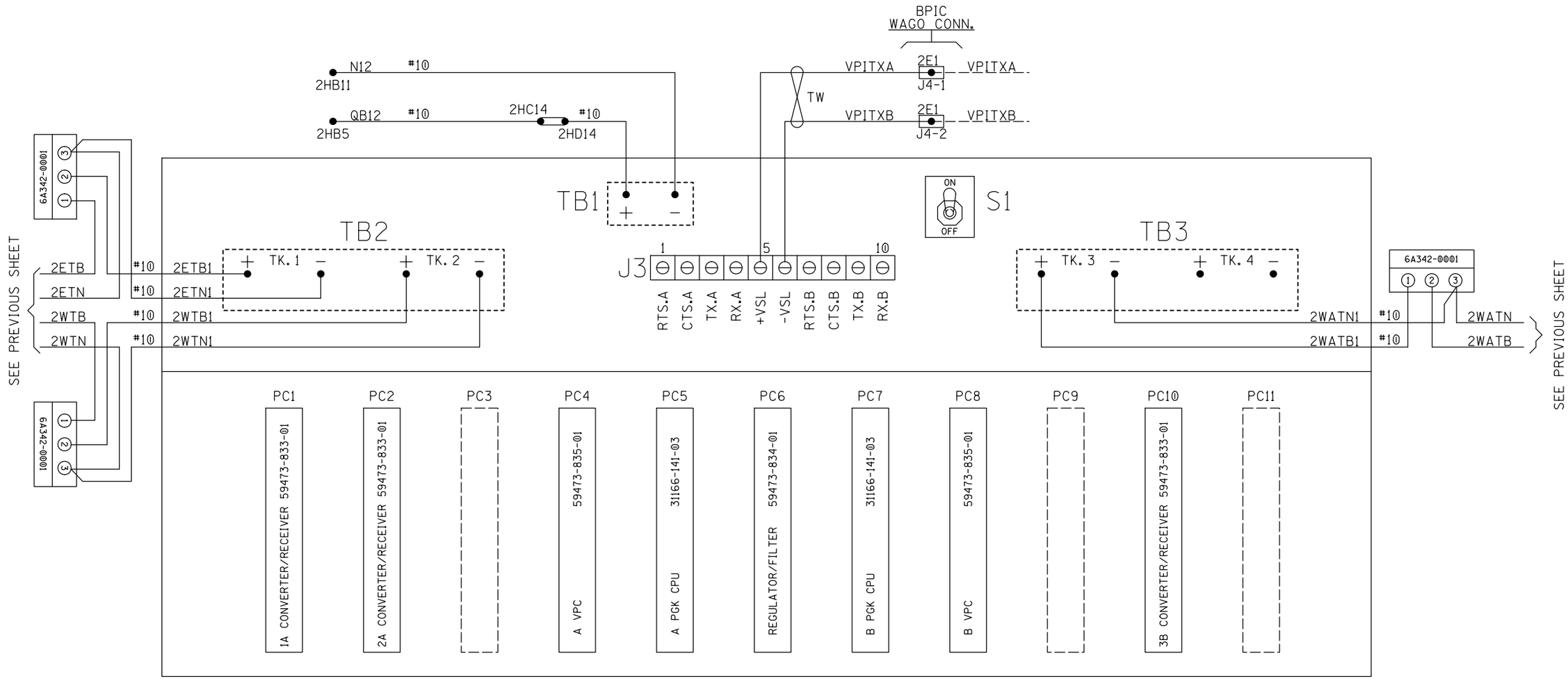

RACK 2
ROW F

SLOT 5 CPU A	SLOT 7 CPU B
PC5-40--PC5-56	PC7-40--PC7-56
PC5-37--PC5-53	PC7-37--PC7-53
PC5-35--PC5-51	PC7-34--PC7-50
PC5-33--PC5-49	PC7-33--PC7-49
PC5-40--PC5-64	PC7-40--PC7-64
PC5-39--PC5-63	PC7-39--PC7-63
PC5-37--PC5-61	PC7-37--PC7-61
PC5-40--PC5-48	PC7-40--PC7-48
PC5-39--PC5-47	PC7-39--PC7-47

NOTE:

INSTALL THE WIRE-WRAP JUMPERS TO THE GENRAKODE MODULE FOR CPU BOARDS AS SHOWN:

NO CHANGE

4-TRACK PROGRAMMABLE GENRAKODE MODULE LAYOUT

DESIGNED BY: RAM 02-14-02	NORFOLK SOUTHERN		
DRAWN BY: SWS 02-14-02	OFFICE OF ASS'T. VICE PRESIDENT COMM. & SIGNAL, ATLANTA, GA.	M.P.: DH479.00	
CHECKED BY: RHW 02-28-02	MOSSER TO HANNIBAL GRIGGSVILLE		
IN SERVICE: DLE 09-08-03	SPRINGFIELD DISTRICT	FILE No. R-1308	
	CADD or DWG. No. SFDH47900.04	SHEET No. 4 of 35	

REVISION	06-07-16
INITIALS	IRE/JWB

PROPERTY
NORFOLK SOUTHERN RAILWAY CO.

CPC= CODE PROTOCOL CONVERTER
CDC= CENTRAL DISPATCH CENTER
HMC= HARMON MAINTENANCE COMPUTER
FEP/CC= FRONT END PROCESSOR/CLUSTER CONTROLLER

HMC ADDRESS= THE HMC REQUESTS AND RECEIVES DIAGNOSTIC AND MEMORY INFORMATION FROM THE VPI. (DEFAULT SETTING IS 3000)

CDC ADDRESS= THE CDC ADDRESS IS A UNIQUE SYSTEM ADDRESS FOR THE "CENTRAL DISPATCH COMPUTER" AND IS ALWAYS 4 DIGITS. (DEFAULT SETTING IS 5026)

CPC ADDRESS= THE CPC ADDRESS IS A UNIQUE SYSTEM ADDRESS FOR THE CENTRAL "CODE PROTOCOL CONVERTER" AND IS ALWAYS 4 DIGITS. (DEFAULT SETTING IS 5010) THE FIRST DIGIT "5" MEANS IT'S SENDING TO THE OFFICE PACKET SWITCH, SECOND DIGIT "0" IS THE DIVISION NUMBER AND THE LAST TWO DIGITS ARE THE CODE LINE NUMBER.

CPC/HMC/CDC NODES= THE CPC,HMC AND CDC NODES ARE THE SAME NUMBER THAT IS ASSIGNED TO THE FEP/CC AND IS ALWAYS 2 DIGITS. (DEFAULT SETTING IS 10) "SET TO THE SAME NUMBER THAT IS ASSIGNED TO THE OFFICE PACKET SWITCH THAT THIS UNIT IS TALKING TO".

SITE ADDRESS= THE SITE ADDRESS IS A UNIQUE SYSTEM ADDRESS FOR A GIVEN GEOGRAPHIC LOCATION AND IS ALWAYS 6 DIGITS. (NO DEFAULT SETTING)

MCP ADDRESS= SAME AS THE SITE ADDRESS.

RR NUMBER= THE RR NUMBER IS A UNIQUE NUMBER ASSIGNED TO EACH RAILROAD AND IS ALWAYS 3 DIGITS. (DEFAULT SETTING IS 620 WHICH IS RESERVED FOR TESTING NEW LOCATIONS).

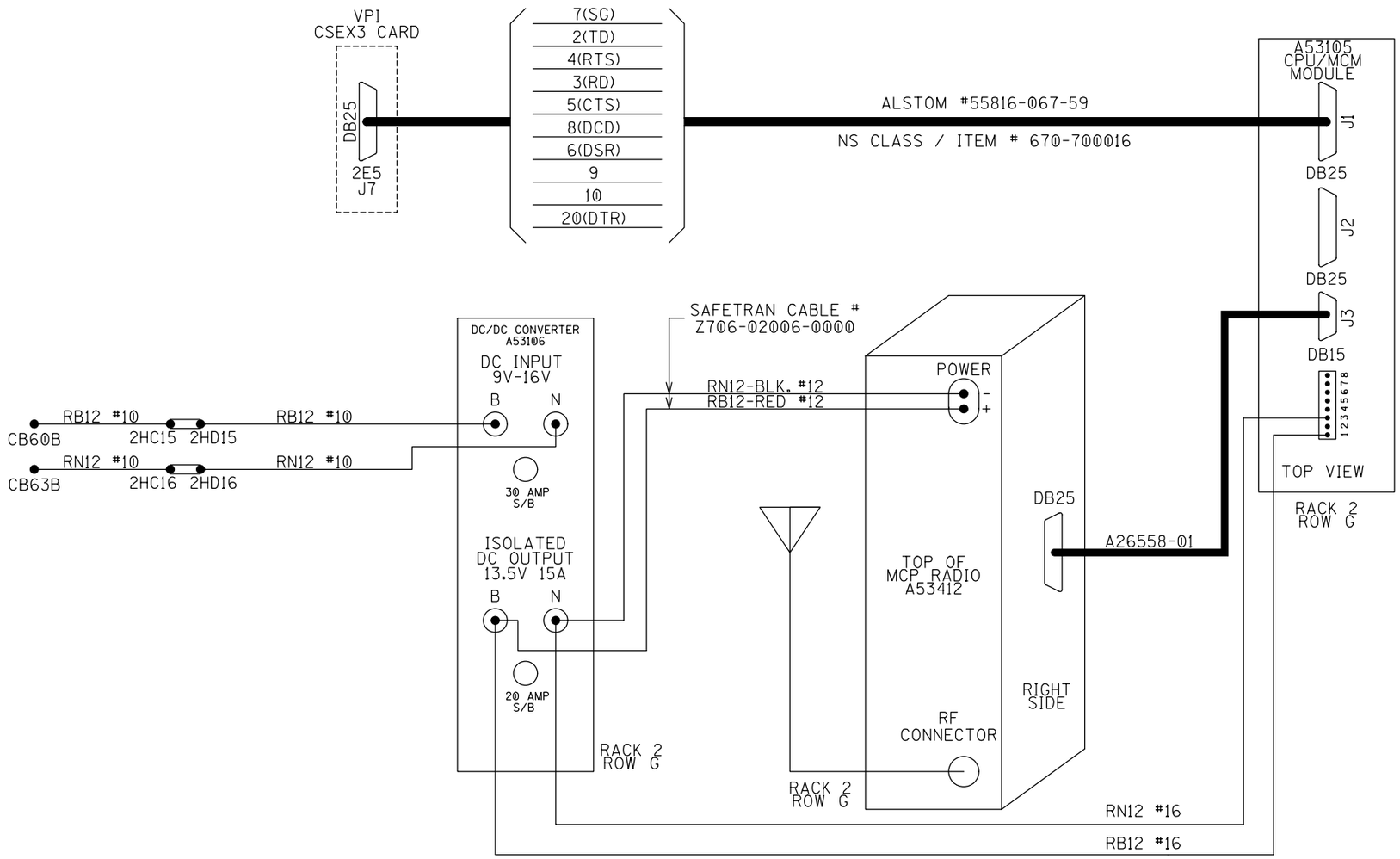

VPI SETUP W/MCP	
CPC PROTOCOL	02
ADDRESS IDENT. DIGIT	7
ADDRESS LENGTH	14
RAILROAD NUMBER	???
UNIT ADDRESS	??????
VPI NODE NUMBER	02
MCP ADDRESS	??????
MCP NODE NUMBER	01
CPC ADDRESS	????
CPC NODE NUMBER	??
HMC ADDRESS	3000
HMC NODE NUMBER	??
CDC ADDRESS	????
CDC NODE NUMBER	??
MCP BAUD RATE	9600

NO CHANGE

DATA RADIO TO VPI

DESIGNED BY: RAM 02-14-02	NORFOLK SOUTHERN		
DRAWN BY: SWS 02-14-02	OFFICE OF ASS'T. VICE PRESIDENT COMM. & SIGNAL, ATLANTA, GA.	M.P.: DH479.00	
CHECKED BY: RHW 02-28-02	MOSSER TO HANNIBAL GRIGGSVILLE		
IN SERVICE: DLE 09-08-03	SPRINGFIELD DISTRICT	FILE No. R-1308	
	CADD or DWG. No. SFDH47900.05	SHEET No. 5 of 35	

REVISION	06-07-16
INITIALS	IRE/JWB

PROPERTY
NORFOLK SOUTHERN RAILWAY CO.

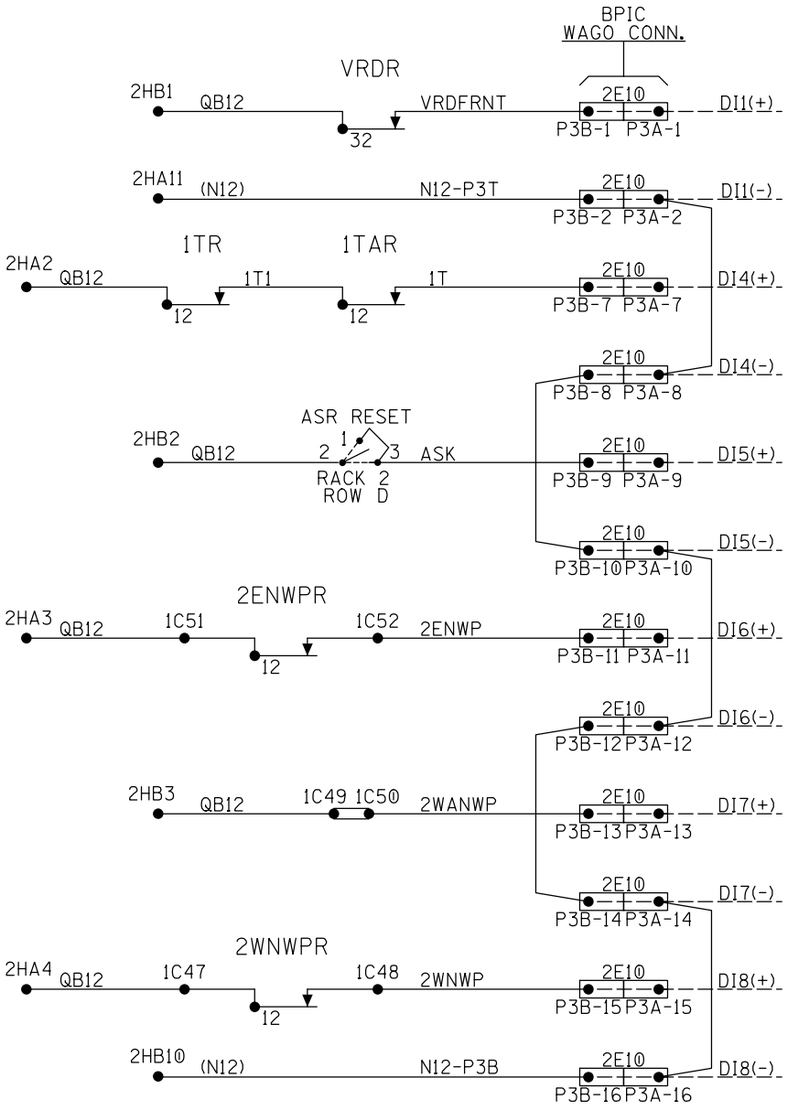

ASR TIME SET
05 MIN. 45 SEC.

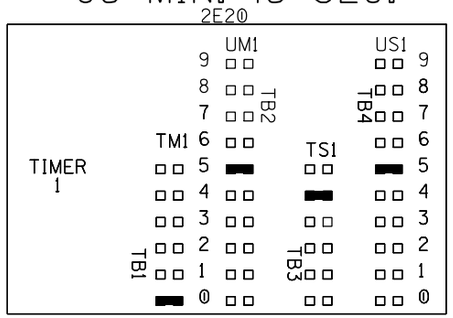

ONE JUMPER MUST BE INSTALLED IN EACH COLUMN

1T LOS TIME SET
00 MIN. 10 SEC.

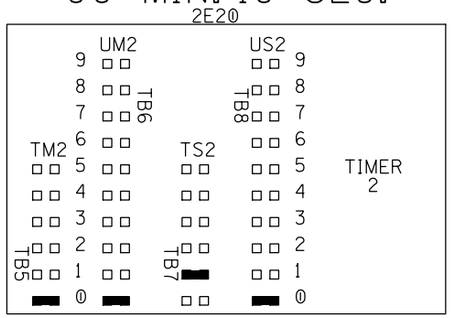

ONE JUMPER MUST BE INSTALLED IN EACH COLUMN

(UNUSED) TIME SET
00 MIN. 00 SEC.

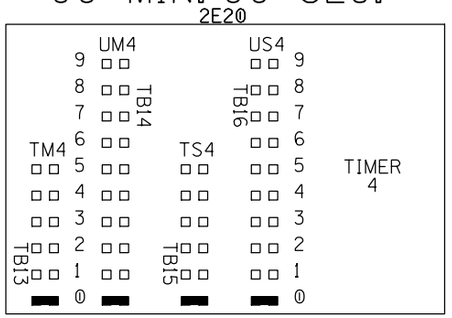

ONE JUMPER MUST BE INSTALLED IN EACH COLUMN

ALL UNUSED TIMERS (3-8) MUST BE CONFIGURED AS SHOWN FOR TIMER 4

NOTE:
1) ALL WIRING TO BE #16 AWG UNLESS SHOWN OTHERWISE

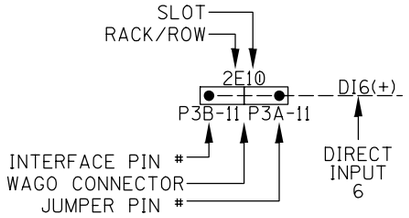

DBO(+) DBO(-) = VITAL OUTPUT

DI(+) DI(-) = VITAL INPUT

LDO(-) = SIGNAL OUTPUT

NO CHANGE

VITAL INPUTS: VRDFRNT, 1T, AS RESET, 2ENWP, 2WANWP, 2WNWP, FSVT JUMPERS,

REVISION	06-07-16
INITIALS	IRE/JWB

PROPERTY
NORFOLK SOUTHERN RAILWAY CO.

DESIGNED BY: RAM 02-14-02	NORFOLK SOUTHERN	
DRAWN BY: SWS 02-14-02	OFFICE OF ASS'T. VICE PRESIDENT COMM. & SIGNAL, ATLANTA, GA.	M.P.: DH479.00
CHECKED BY: RHW 02-28-02	MOSSER TO HANNIBAL GRIGGSVILLE	
IN SERVICE: DLE 09-08-03	SPRINGFIELD DISTRICT	FILE No. R-1308
	CADD or DWG. No. SFDH47900.06	SHEET No. 6 of 35

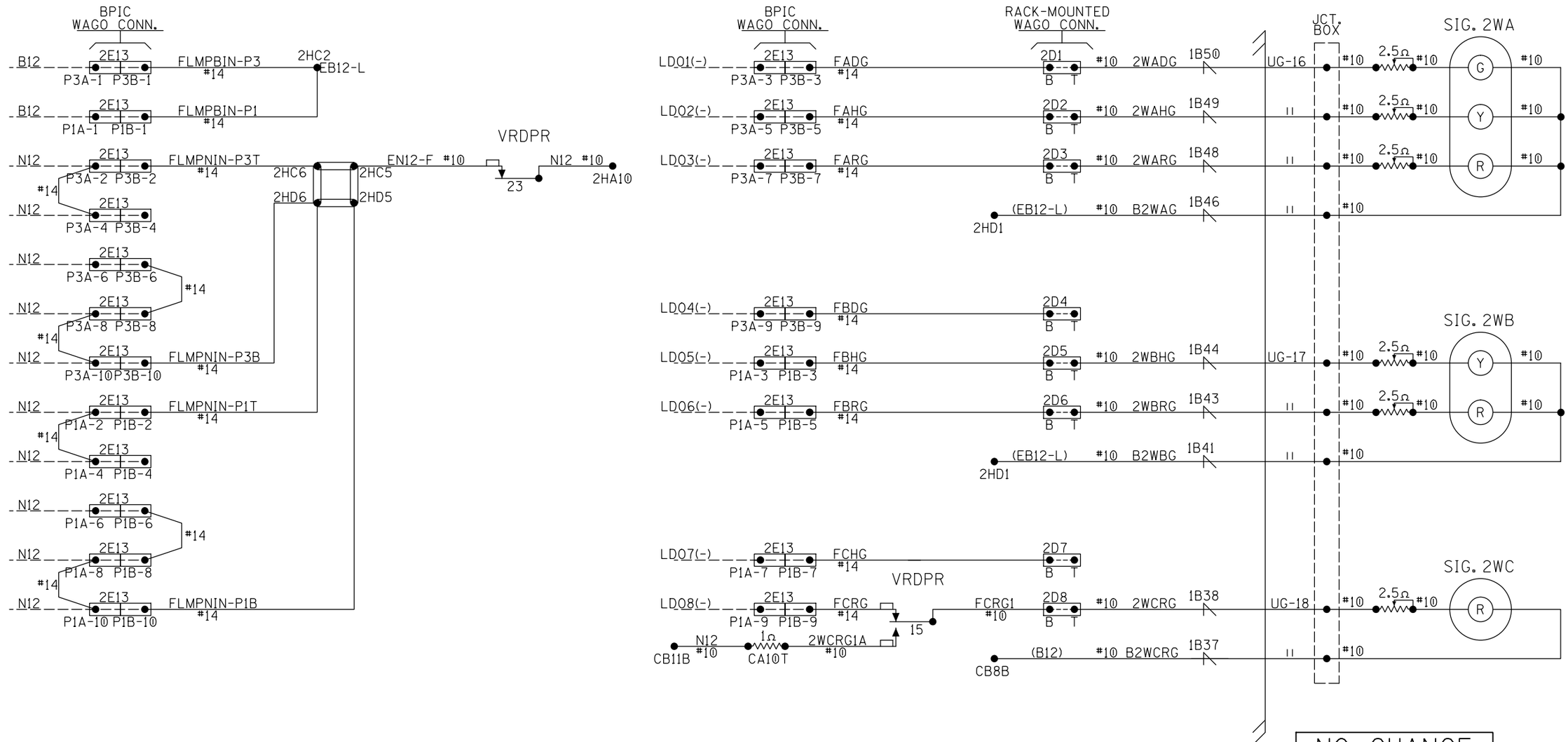

WARNING

Do not use an equalizer or low voltage surge arrester between a Lamp Output and Lamp Common. Install surge arresters only between Lamp Output and earth ground and Lamp Common and earth ground. The VPI (Vital Processor Interlocking) may interpret a failed surge arrester as a lamp filament if the surge arrester is installed incorrectly.

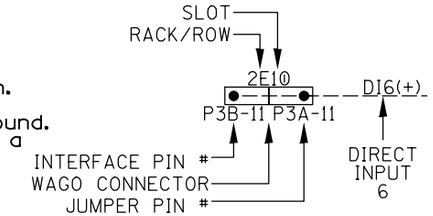

DBO(+) DBO(-) = VITAL OUTPUT

DI(+) DI(-) = VITAL INPUT

LDO(-) = SIGNAL OUTPUT

= CLEARVIEW ARRESTER

2W SIGNAL LIGHTING

DESIGNED BY: RAM 02-14-02	NORFOLK SOUTHERN		
DRAWN BY: SWS 02-14-02	OFFICE OF ASS'T. VICE PRESIDENT COMM. & SIGNAL, ATLANTA, GA.	M.P.: DH479.00	
CHECKED BY: RHW 02-28-02	MOSSER TO HANNIBAL GRIGGSVILLE		
IN SERVICE: DLE 09-08-03	SPRINGFIELD DISTRICT	FILE No. R-1308	
	CADD or DWG. No. SFDH47900.07	SHEET No. 7 of 35	

REVISION	06-07-16
INITIALS	IRE/JWB

PROPERTY
NORFOLK SOUTHERN RAILWAY CO.

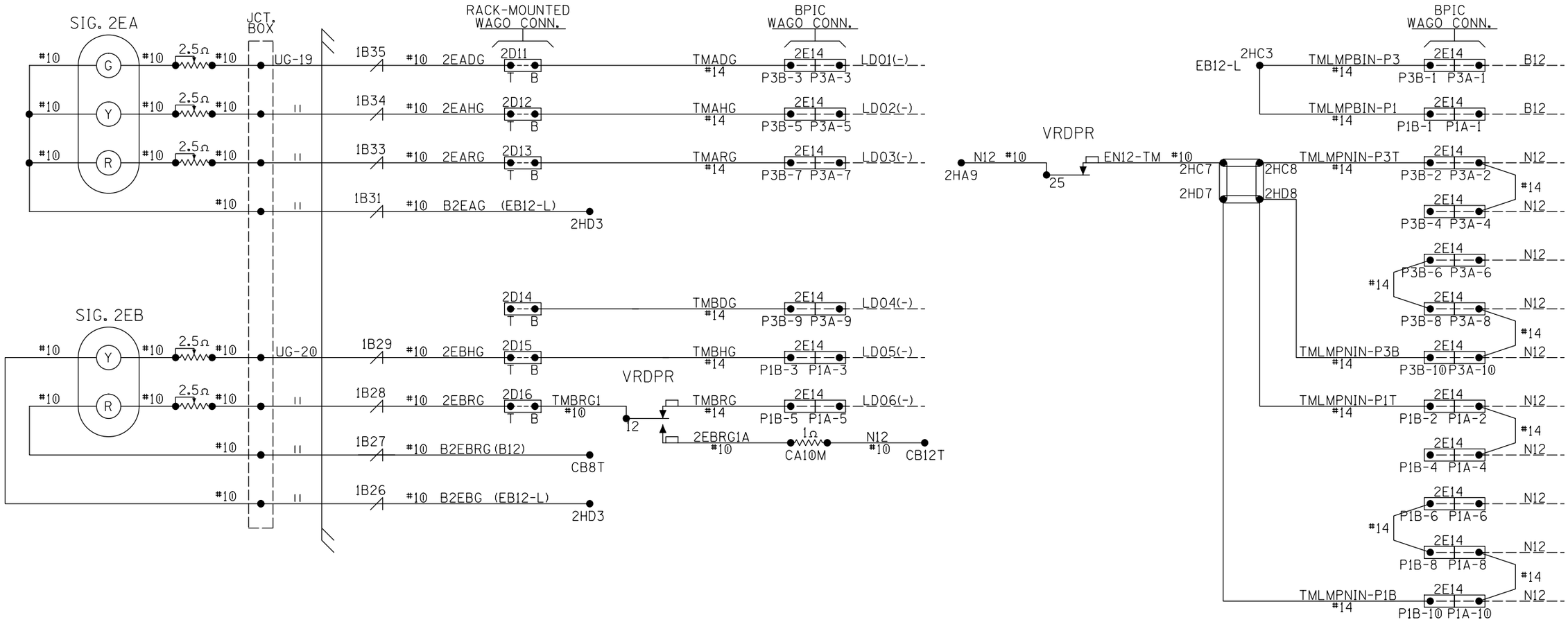

NO CHANGE

2EA SIGNAL LIGHTING

WARNING

Do not use an equalizer or low voltage surge arrester between a Lamp Output and Lamp Common. Install surge arresters only between Lamp Output and earth ground and Lamp Common and earth ground. The VPI (Vital Processor Interlocking) may interpret a failed surge arrester as a lamp filament if the surge arrester is installed incorrectly.

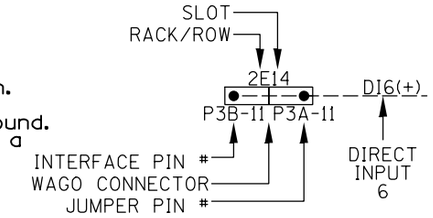

DBO(+) DBO(-) = VITAL OUTPUT

DI(+) DI(-) = VITAL INPUT

LDO(-) = SIGNAL OUTPUT

= CLEARVIEW ARRESTER

DESIGNED BY: RAM	02-14-02
DRAWN BY: SWS	02-14-02
CHECKED BY: RHW	02-28-02
IN SERVICE: DLE	09-08-03

NORFOLK SOUTHERN

OFFICE OF ASS'T. VICE PRESIDENT COMM. & SIGNAL, ATLANTA, GA. M.P.: DH479.00

MOSSER TO HANNIBAL GRIGGSVILLE

SPRINGFIELD DISTRICT FILE No. R-1308

CADD or DWG. No. SFDH47900.08 SHEET No. 8 of 35

REVISION	06-07-16
INITIALS	IRE/JWB

PROPERTY NORFOLK SOUTHERN RAILWAY CO.

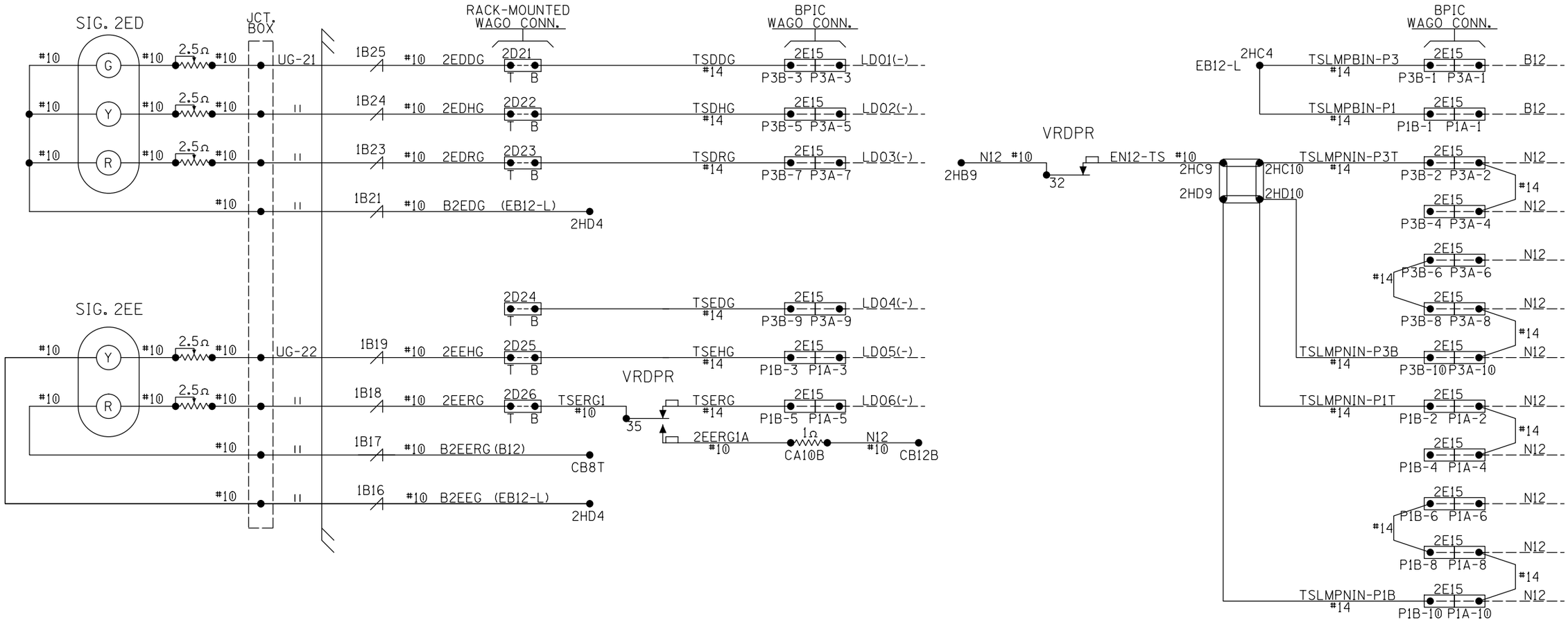

NO CHANGE

WARNING

Do not use an equalizer or low voltage surge arrester between a Lamp Output and Lamp Common. Install surge arresters only between Lamp Output and earth ground and Lamp Common and earth ground. The VPI (Vital Processor Interlocking) may interpret a failed surge arrester as a lamp filament if the surge arrester is installed incorrectly.

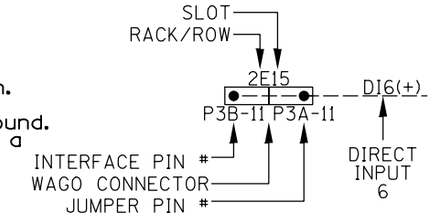

DBO(+) DBO(-) = VITAL OUTPUT

DI(+) DI(-) = VITAL INPUT

LDO(-) = SIGNAL OUTPUT

= CLEARVIEW ARRESTER

2ED SIGNAL LIGHTING

DESIGNED BY: RAM 02-14-02	NORFOLK SOUTHERN		
DRAWN BY: SWS 02-14-02	OFFICE OF ASS'T. VICE PRESIDENT COMM. & SIGNAL, ATLANTA, GA.	M.P.: DH479.00	
CHECKED BY: RHW 02-28-02	MOSSER TO HANNIBAL GRIGGSVILLE		
IN SERVICE: DLE 09-08-03	SPRINGFIELD DISTRICT	FILE No. R-1308	
	CADD or DWG. No. SFDH47900.09	SHEET No. 9 of 35	

REVISION	06-07-16
INITIALS	IRE/JWB

PROPERTY
NORFOLK SOUTHERN RAILWAY CO.

SWITCH
L.H. LAYOUT, L.H. POINT NORMALLY CLOSED
M23A SWITCH MACHINE
24 VOLT PERMANENT MAGNET

NOTE: M23 MUST BE EQUIPPED WITH A PERMANENT MAGNET MOTOR TO USE A THREE WIRE HOOKUP. FOR M23 SWITCH MACHINES WITHOUT PERMANENT MAGNET MOTORS A FIVE WIRE HOOKUP IS REQUIRED.

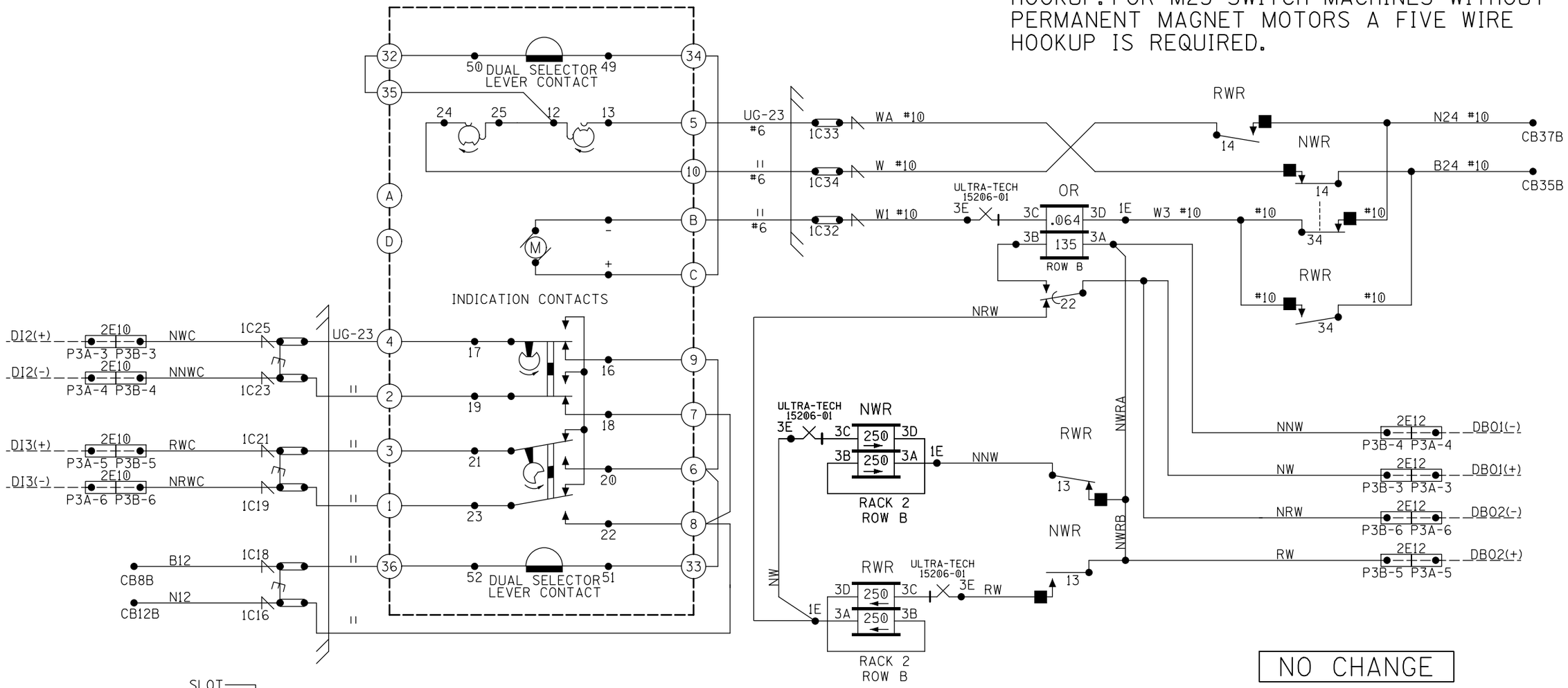

NO CHANGE

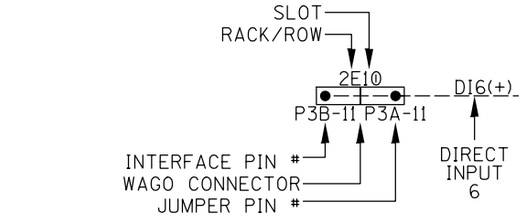

DBO(+) DBO(-) = VITAL OUTPUT

DI(+) DI(-) = VITAL INPUT

LDO(-) = SIGNAL OUTPUT

NOTE:

1. ALL WIRING TO BE #16 AWG UNLESS SHOWN OTHERWISE.
2. = EQUALIZER
3. = CLEARVIEW ARRESTER

NWR, RWR, OR, M23A WIRING

DESIGNED BY: RAM 02-14-02	NORFOLK SOUTHERN		
DRAWN BY: SWS 02-14-02	OFFICE OF ASS'T. VICE PRESIDENT COMM. & SIGNAL, ATLANTA, GA.	M.P.: DH479.00	
CHECKED BY: RHW 02-28-02	MOSSER TO HANNIBAL GRIGGSVILLE		
IN SERVICE: DLE 09-08-03	SPRINGFIELD DISTRICT	FILE No. R-1308	
	CADD or DWG. No. SFDH47900.10	SHEET No. 10 of 35	

REVISION	06-07-16
INITIALS	IRE/JWB

PROPERTY
NORFOLK SOUTHERN RAILWAY CO.

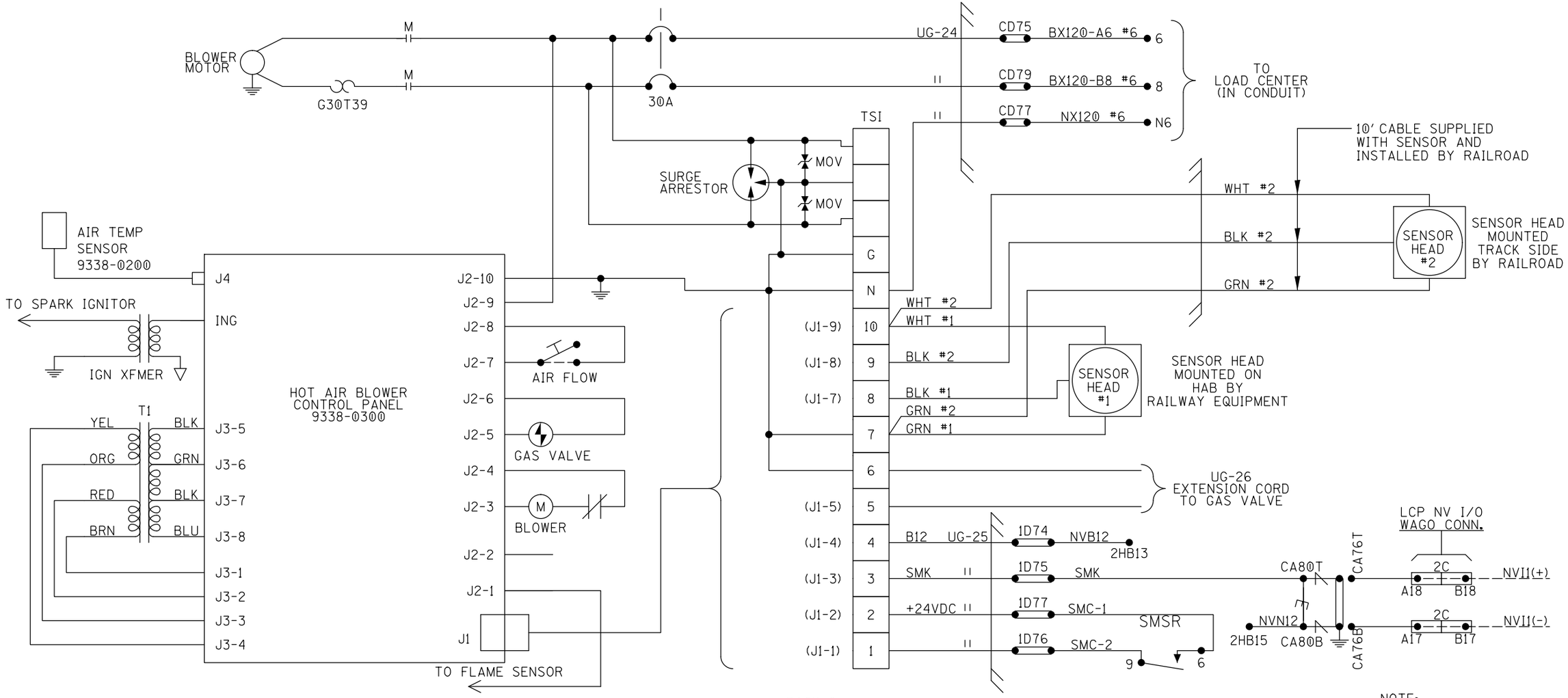

NO CHANGE

SNOW MELTER

NOTE:

1. RUN ALL WIRING THIS SHEET SEPARATELY.
2. ●—● = TEST LINK

DESIGNED BY: RAM 02-14-02	NORFOLK SOUTHERN		
DRAWN BY: SWS 02-14-02	OFFICE OF ASS'T. VICE PRESIDENT COMM. & SIGNAL, ATLANTA, GA.	M.P.: DH479.00	
CHECKED BY: RHW 02-28-02	MOSSER TO HANNIBAL GRIGGSVILLE		
IN SERVICE: DLE 09-08-03	SPRINGFIELD DISTRICT	FILE No. R-1308	
	CADD or DWG. No. SFDH47900.11	SHEET No. 11 of 35	

REVISION	06-07-16
INITIALS	IRE/JWB

PROPERTY
NORFOLK AND WESTERN RWY. CO.

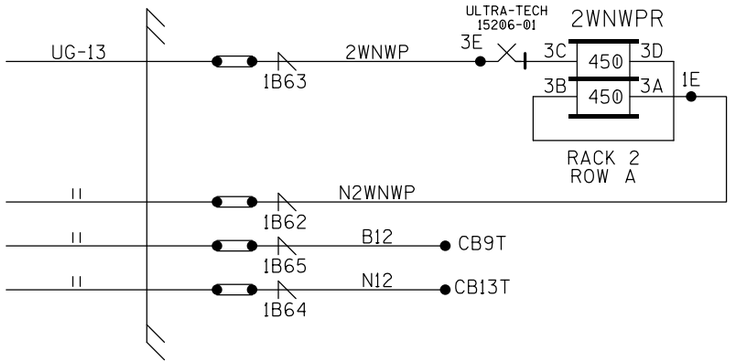

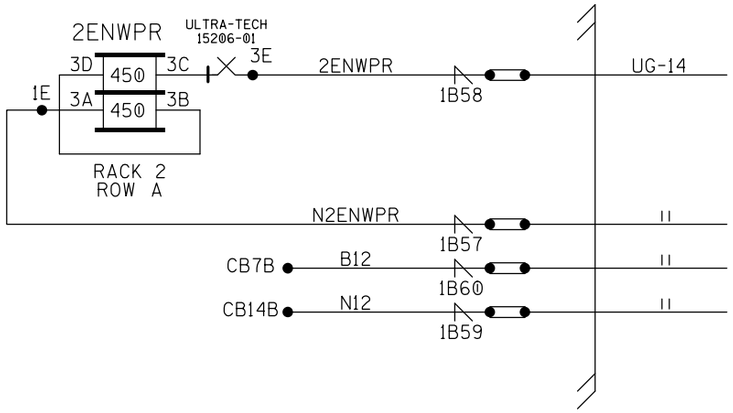

NO CHANGE

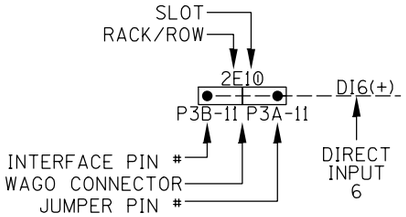

DBO(+) DBO(-) = VITAL OUTPUT

DI(+) DI(-) = VITAL INPUT

LDO(-) = SIGNAL OUTPUT

NOTE:

1. ALL WIRING TO BE #16 AWG UNLESS SHOWN OTHERWISE.
2. = CLEARVIEW ARRESTER

2WNWPR, 2ENWPR

DESIGNED BY: RAM 02-14-02	NORFOLK SOUTHERN		
DRAWN BY: SWS 02-14-02	OFFICE OF ASS'T. VICE PRESIDENT COMM. & SIGNAL, ATLANTA, GA.	M.P.:	DH479.00
CHECKED BY: RHW 02-28-02	MOSSER TO HANNIBAL GRIGGSVILLE		
IN SERVICE: DLE 09-08-03	SPRINGFIELD DISTRICT	FILE No.	R-1308
	CADD or DWG. No. SFDH47900.12	SHEET No.	12 of 35

REVISION	06-07-16
INITIALS	IRE/JWB

NORFOLK SOUTHERN RAILWAY CO.

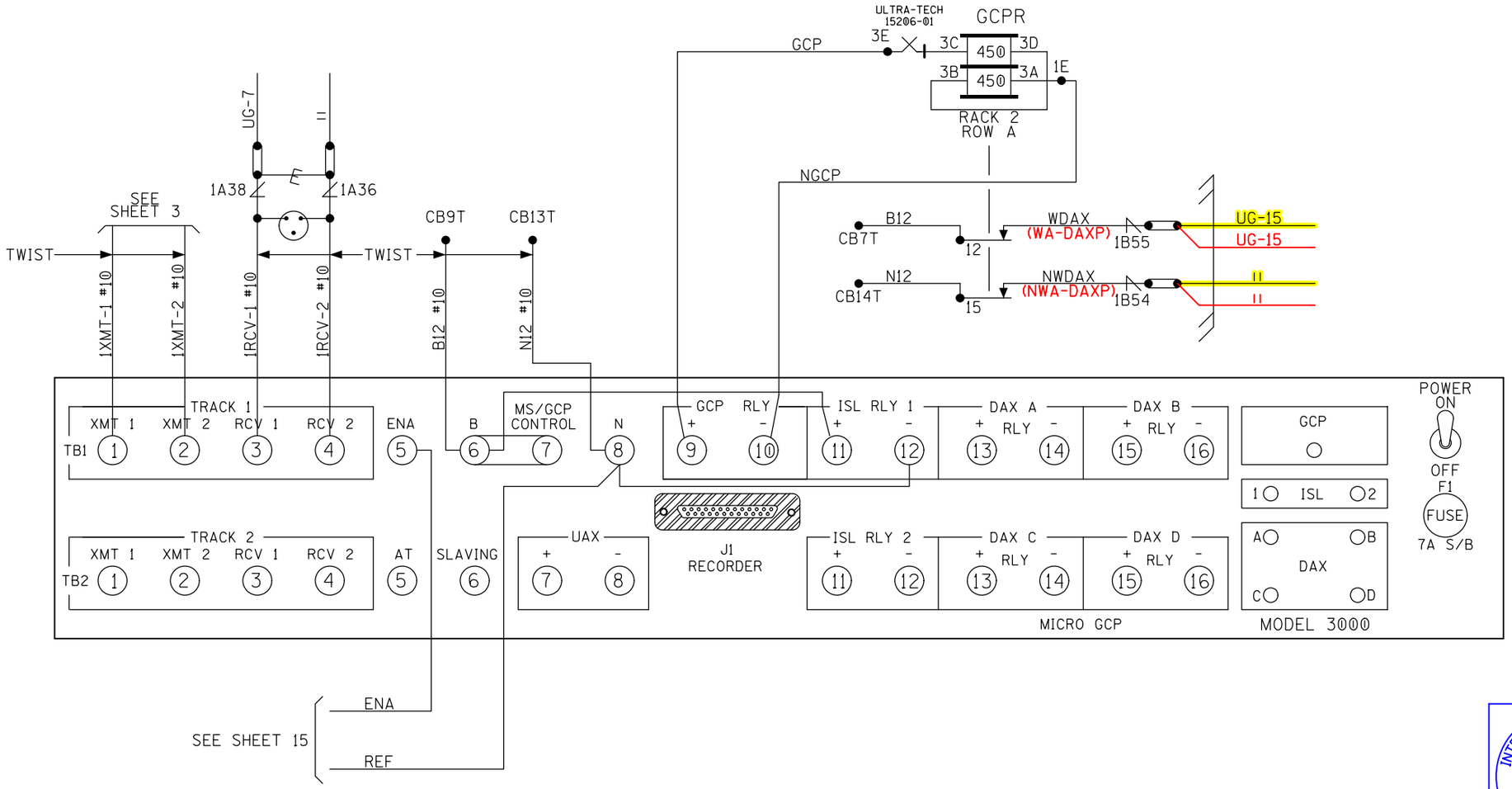

TRACK 1
3000 GCP

T1 IF = --.- KHZ
T2 IF = --.- KHZ

INTERRAIL ENGINEERING 16086 INCORPORATED

RED = IN
YELLOW = OUT

DATE: 05-20-2016
NS PROJ.#04.0889
IRE/JWB/DBS

NOTE:

1. ALL WIRING TO BE #16 AWG UNLESS SHOWN OTHERWISE.
2. ⊥ = CLEARVIEW ARRESTER

TRK 1 - 3000 GCP HOOK-UP

DESIGNED BY: RAM 02-14-02	NORFOLK SOUTHERN		
DRAWN BY: SWS 02-14-02	OFFICE OF ASS'T. VICE PRESIDENT COMM. & SIGNAL, ATLANTA, GA.	M.P.: DH479.00	
CHECKED BY: RHW 02-28-02	MOSSER TO HANNIBAL GRIGGSVILLE		
IN SERVICE: DLE 09-08-03	SPRINGFIELD DISTRICT	FILE No. R-1308	
	CADD or DWG. No. SFDH47900.13	SHEET No. 13 of 35	

REVISION	06-07-16								
INITIALS	IRE/JWB								

PROPERTY
NORFOLK SOUTHERN RAILWAY CO.

3000 PROGRAMMING

# OF TKS/TRANSCEIVERS	1
T1 FREQUENCY	790Hz
T2 FREQUENCY	---Hz
T1 UNI/BIDIRECTIONAL	BI
T2 UNI/BIDIRECTIONAL	---
T1 POWER-MAX/MED	MED
T2 POWER-MAX/MED	---
T1 PRED/MS	PRED
T2 PRED/MS	----
T1 WARNING TIME	30 Sec
T2 WARNING TIME	-- Sec
T1 APPROACH DIST	476 Ft
T2 APPROACH DIST	---- Ft
UAX PU DLY (0=OFF)	0 Sec
ENA/UAX PU DLY(0=OFF)	0 Sec
T1 ISL DIST	Ft
T2 ISL DIST	---- Ft
# OF DAX'S	0 Ea
DAX A = T1/T2?	TRACK=
DAX A DIST	Ft
DAX A WARN TIME	Sec
DAX B = T1/T2?	TRACK=
DAX B DIST	Ft
DAX B WARN TIME	Sec
DAX C = T1/T2?	TRACK=
DAX C DIST	Ft
DAX C WARN TIME	Sec
DAX D = T1/T2?	TRACK=
DAX D DIST	Ft
DAX D WARN TIME	Sec
MASTER?/SLAVE?	MASTER
PASSWORD NO/YES	NO
RECORDER NO/YES	NO

EXPANDED PROGRAMMING

T1-SW TO MS AT 10% OF EZ	
T2-SW TO MS AT ---% OF EZ	
T1-DELAY MS TO GCP	0 Sec
T2-DELAY MS TO GCP	--- Sec
T1 PRIME PRE. OFFSET	319 Ft
T2 PRIME PRE. OFFSET	---- Ft
PRIME PU TIME DELAY	15 Sec
DAX A PU DELAY	-- Sec
DAX B PU DELAY	-- Sec
DAX C PU DELAY	-- Sec
DAX D PU DELAY	-- Sec
ENHANCED DETECT MODE	OFF
BACK-TO-BACK	OFF
STATION STOP TIMER	10 Sec
T1# OF TRK. WIRES 4/6	4
T2# OF TRK. WIRES 4/6	-
LOW EX ADJUSTMENT	0
T1 LOW EZ DETECTION	OFF
T2 LOW EZ DETECTION	--
T1 LOW EZ DET. TIMER	10 Min
T2 LOW EZ DET. TIMER	-- Min
T1 POS. START EZ LEVEL	0
T2 POS. START EZ LEVEL	--
T1 POS. START T.O.	0 Min
T2 POS. START T.O.	-- Min
SET AT OPERATION	NORMAL
ADV. PRE.TIMER (0=OFF)	0 Sec

✳ = 1ST SLOT AT LEFT END OF BAY

MODEL 3000 GCP MODULE ASSEMBLIES

MODULES POSITION	M1	M2	M3	M4	M5	M6	M7	M8	M9	M10
MODULE NUMBERS	80211-f(1) ✳	80211-f(2)	80012 T/R 1	80012 T/R 2	80013 RLY DRV	80214 PROCS	80015 LOGG	80016 (1) DAX	80016 (2)DAX	80020 +80017
MODULES USED			X		X	X				X

NOTES:
1 - SEE IPI INSTRUCTION AND INSTALLATION MANUAL FOR 80211 ISLAND CALIBRATION PROCEDURE.

2 - TOGGLE SWITCH ON MOTHER BOARD:
UP = DUAL FREQ.
DOWN = SINGLE FREQ.

NO CHANGE

TRK 1 - 3000 GCP SET-UP

DESIGNED BY: RAM 02-14-02	NORFOLK SOUTHERN		
DRAWN BY: SWS 02-14-02	OFFICE OF ASS'T. VICE PRESIDENT COMM. & SIGNAL, ATLANTA, GA.	M.P.: DH479.00	
CHECKED BY: RHW 02-28-02	MOSSER TO HANNIBAL GRIGGSVILLE		
IN SERVICE: DLE 09-08-03	SPRINGFIELD DISTRICT	FILE No. R-1308	
	CADD or DWG. No. SFDH47900.14	SHEET No. 14 of 35	

REVISION	06-07-16									
INITIALS	IRE/JWB									

PROPERTY
NORFOLK SOUTHERN RAILWAY CO.

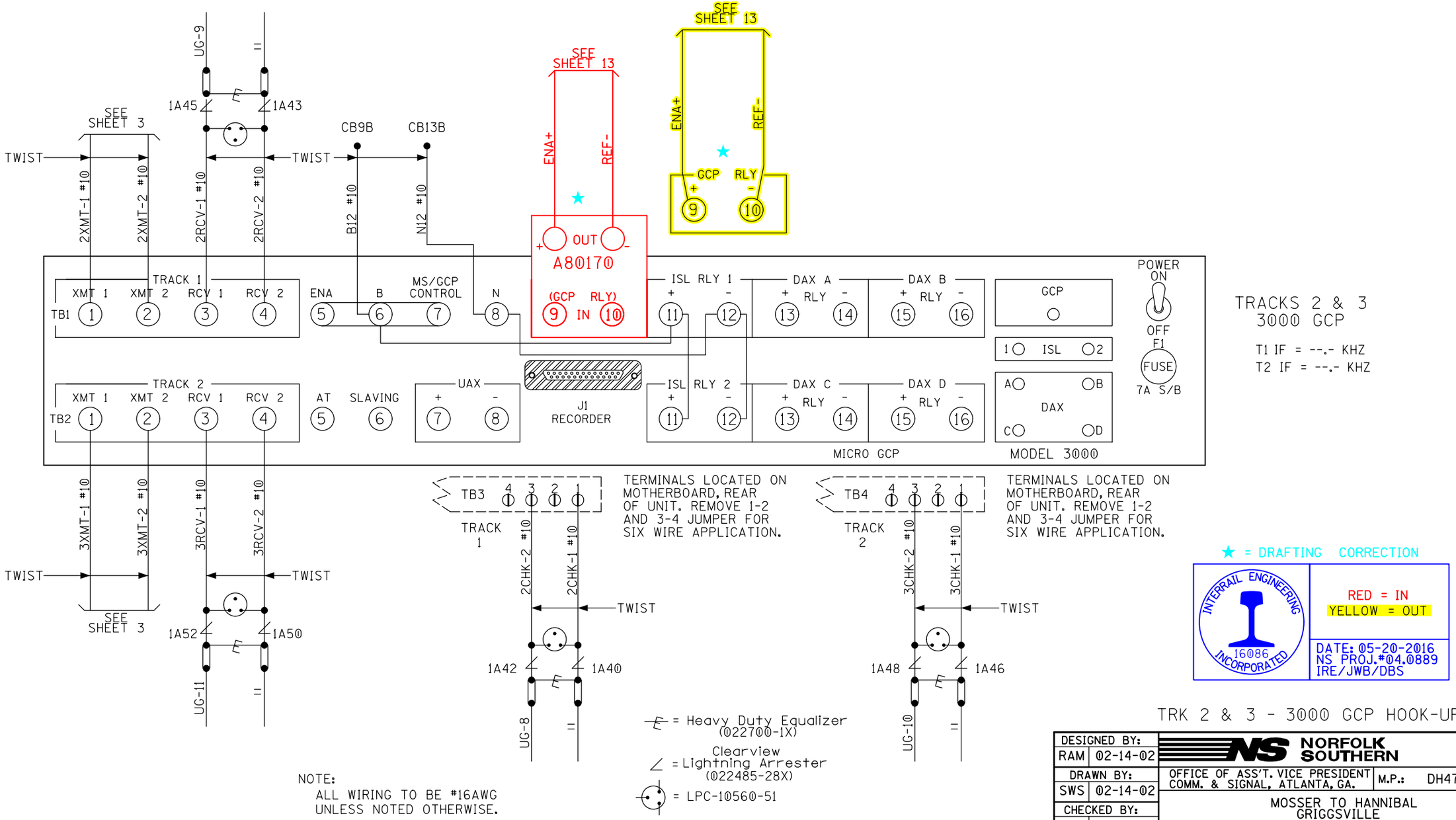

★ = DRAFTING CORRECTION

INTERRAIL ENGINEERING 16086 INCORPORATED

RED = IN
YELLOW = OUT

DATE: 05-20-2016
NS PROJ.#04.0889
IRE/JWB/DBS

TRK 2 & 3 - 3000 GCP HOOK-UP

DESIGNED BY: RAM 02-14-02	NORFOLK SOUTHERN
DRAWN BY: SWS 02-14-02	OFFICE OF ASS'T. VICE PRESIDENT COMM. & SIGNAL, ATLANTA, GA. — M.P.: DH479.00
CHECKED BY: RHW 02-28-02	MOSSER TO HANNIBAL GRIGGSVILLE
IN SERVICE: DLE 09-08-03	SPRINGFIELD DISTRICT — FILE No. R-1308
	CADD or DWG. No. SFDH47900.15 — SHEET No. 15 of 35

REVISION	06-07-16
INITIALS	IRE/JWB

PROPERTY
NORFOLK SOUTHERN RAILWAY CO.

3000 PROGRAMMING

# OF TKS/TRANSCEIVERS	2	
T1 FREQUENCY	211Hz	
T2 FREQUENCY	430Hz	
T1 UNI/BIDIRECTIONAL	UNI	
T2 UNI/BIDIRECTIONAL	UNI	
T1 POWER-MAX/MED	MAX	
T2 POWER-MAX/MED	MAX	
T1 PRED/MS	PRED	
T2 PRED/MS	PRED	
T1 WARNING TIME	30 Sec	
T2 WARNING TIME	30 Sec	
T1 APPROACH DIST	2310 Ft	1778 Ft
T2 APPROACH DIST	1000 Ft	749 Ft
UAX PU DLY (0=OFF)	0 Sec	
ENA/UAX PU DLY(0=OFF)	0 Sec	
T1 ISL DIST	Ft	
T2 ISL DIST	Ft	
# OF DAX'S	0 Ea	
DAX A = T1/T2?	TRACK=	
DAX A DIST	Ft	
DAX A WARN TIME	Sec	
DAX B = T1/T2?	TRACK=	
DAX B DIST	Ft	
DAX B WARN TIME	Sec	
DAX C = T1/T2?	TRACK=	
DAX C DIST	Ft	
DAX C WARN TIME	Sec	
DAX D = T1/T2?	TRACK=	
DAX D DIST	Ft	
DAX D WARN TIME	Sec	
MASTER?/SLAVE?	MASTER	
PASSWORD NO/YES	NO	
RECORDER NO/YES	NO	

EXPANDED PROGRAMMING

T1-SW TO MS AT 10% OF EZ		
T2-SW TO MS AT 10% OF EZ		
T1-DELAY MS TO GCP	0 Sec	
T2-DELAY MS TO GCP	0 Sec	
T1 PRIME PRE. OFFSET	777 Ft	795 Ft
T2 PRIME PRE. OFFSET	777 Ft	795 Ft
PRIME PU TIME DELAY	15 Sec	
DAX A PU DELAY	-- Sec	
DAX B PU DELAY	-- Sec	
DAX C PU DELAY	-- Sec	
DAX D PU DELAY	-- Sec	
ENHANCED DETECT MODE	OFF	
BACK-TO-BACK	OFF	
STATION STOP TIMER	10 Sec	
T1# OF TRK. WIRES 4/6	6	
T2# OF TRK. WIRES 4/6	6	
LOW EX ADJUSTMENT	0	
T1 LOW EZ DETECTION	OFF	
T2 LOW EZ DETECTION	OFF	
T1 LOW EZ DET. TIMER	10 Min	
T2 LOW EZ DET. TIMER	10 Min	
T1 POS. START EZ LEVEL	0	
T2 POS. START EZ LEVEL	0	
T1 POS. START T.O.	0 Min	
T2 POS. START T.O.	0 Min	
SET AT OPERATION	NORMAL	
ADV. PRE.TIMER (0=OFF)	0 Sec	

✳ = 1ST SLOT AT LEFT END OF BAY

MODEL 3000 GCP MODULE ASSEMBLIES

MODULES POSITION	M1	M2	M3	M4	M5	M6	M7	M8	M9	M10
MODULE NUMBERS	80211-f(1) ✳	80211-f(2)	80012 T/R 1	80012 T/R 2	80013 RLY DRV	80214 PROCS	80015 LOGG	80016 (1) DAX	80016 (2)DAX	80020 +80017
MODULES USED			X	X	X	X				X

NOTES:
1 - SEE IPI INSTRUCTION AND INSTALLATION MANUAL FOR 80211 ISLAND CALIBRATION PROCEDURE.

2 - TOGGLE SWITCH ON MOTHER BOARD:
UP = DUAL FREQ.
DOWN = SINGLE FREQ.

INTERRAIL ENGINEERING INCORPORATED 16086

RED = IN
YELLOW = OUT

DATE: 05-20-2016
NS PROJ.#04.0889
IRE/JWB/DBS

TRK 2 & 3 - 3000 GCP SET-UP

DESIGNED BY: RAM 02-14-02	NORFOLK SOUTHERN		
DRAWN BY: SWS 02-14-02	OFFICE OF ASS'T. VICE PRESIDENT COMM. & SIGNAL, ATLANTA, GA.	M.P.: DH479.00	
CHECKED BY: RHW 02-28-02	MOSSER TO HANNIBAL GRIGGSVILLE		
IN SERVICE: DLE 09-08-03	SPRINGFIELD DISTRICT	FILE No. R-1308	
	CADD or DWG. No. SFDH47900.16	SHEET No. 16 of 35	

REVISION INITIALS

PROPERTY
NORFOLK SOUTHERN RAILWAY CO.

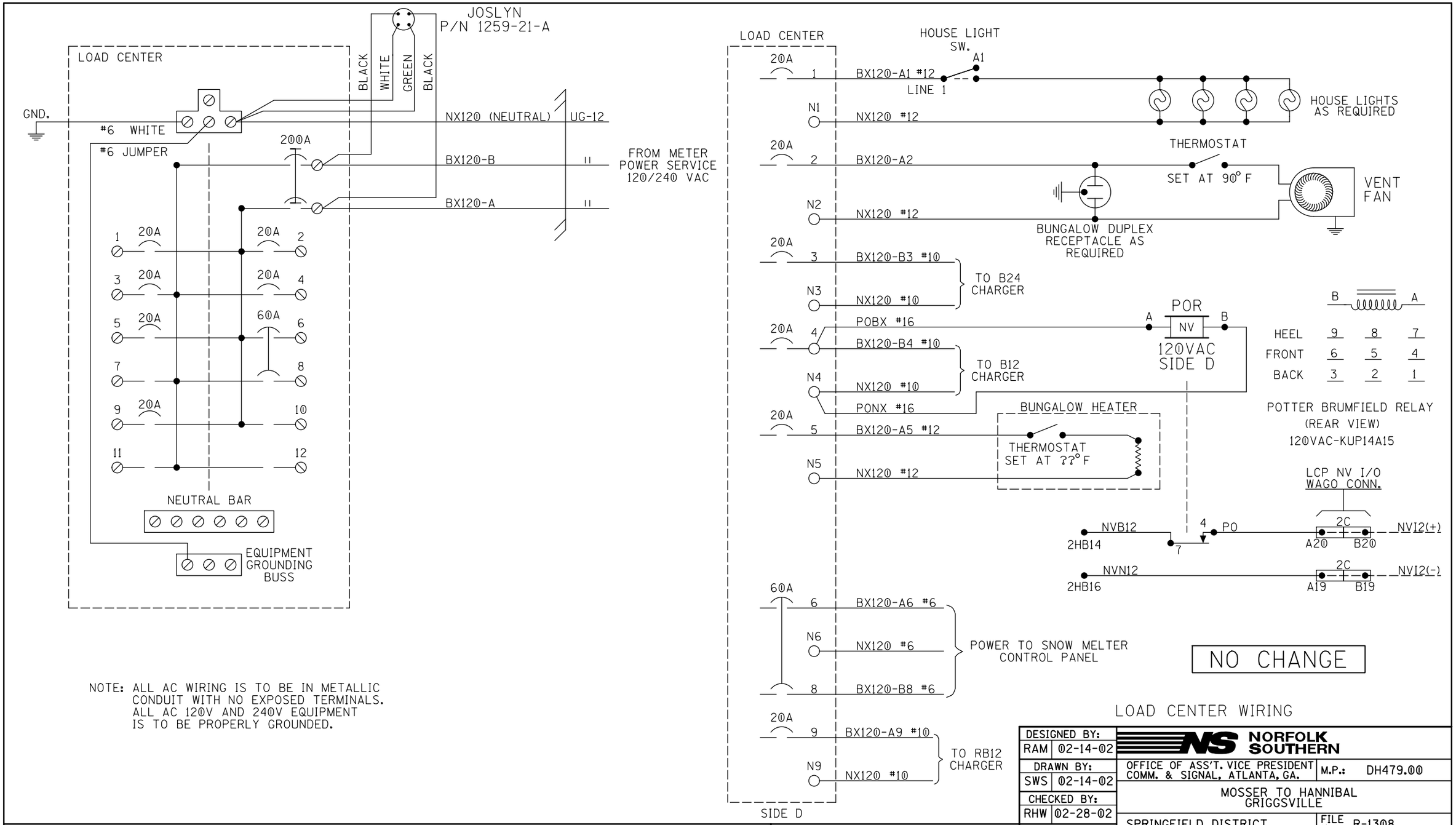

NOTE: ALL AC WIRING IS TO BE IN METALLIC CONDUIT WITH NO EXPOSED TERMINALS. ALL AC 120V AND 240V EQUIPMENT IS TO BE PROPERLY GROUNDED.

LOAD CENTER WIRING

DESIGNED BY: RAM 02-14-02	NORFOLK SOUTHERN		
DRAWN BY: SWS 02-14-02	OFFICE OF ASS'T. VICE PRESIDENT COMM. & SIGNAL, ATLANTA, GA.	M.P.: DH479.00	
CHECKED BY: RHW 02-28-02	MOSSER TO HANNIBAL GRIGGSVILLE		
IN SERVICE: DLE 09-08-03	SPRINGFIELD DISTRICT	FILE No. R-1308	
	CADD or DWG. No. SFDH47900.17	SHEET No. 17 of 35	

REVISION	06-07-16
INITIALS	IRE/JWB

PROPERTY
NORFOLK SOUTHERN RAILWAY CO.

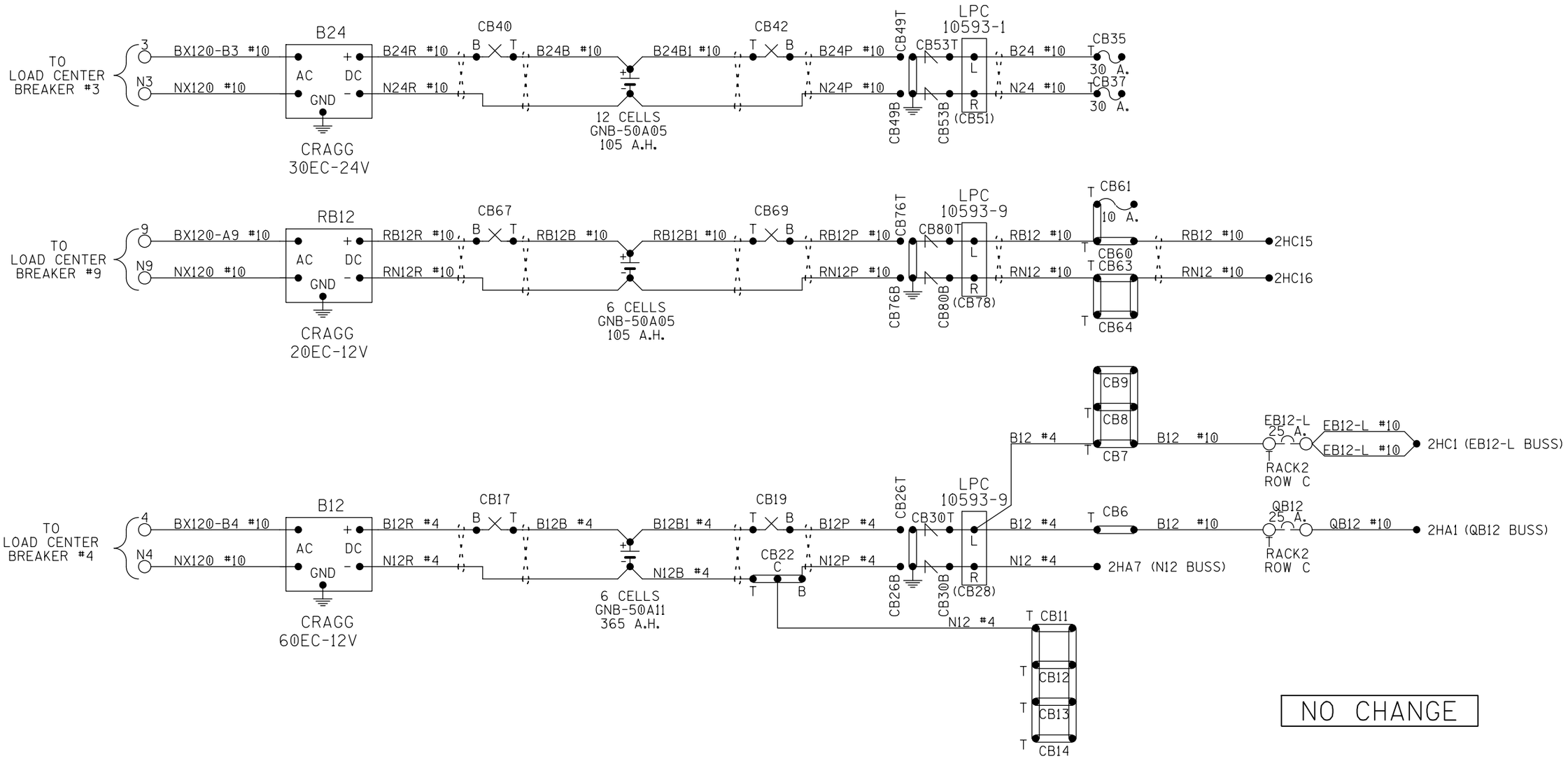

NO CHANGE

B12, RB12, B24, RECTIFIER AND BATTERY

= TWIST BATTERY LEADS

DESIGNED BY: RAM 02-14-02	NORFOLK SOUTHERN		
DRAWN BY: SWS 02-14-02	OFFICE OF ASS'T. VICE PRESIDENT COMM. & SIGNAL, ATLANTA, GA.	M.P.: DH479.00	
CHECKED BY: RHW 02-28-02	MOSSER TO HANNIBAL GRIGGSVILLE		
IN SERVICE: DLE 09-08-03	SPRINGFIELD DISTRICT	FILE No. R-1308	
	CADD or DWG. No. SFDH47900.18	SHEET No. 18 of 35	

REVISION	06-07-16
INITIALS	IRE/JWB

PROPERTY
NORFOLK SOUTHERN RAILWAY CO.

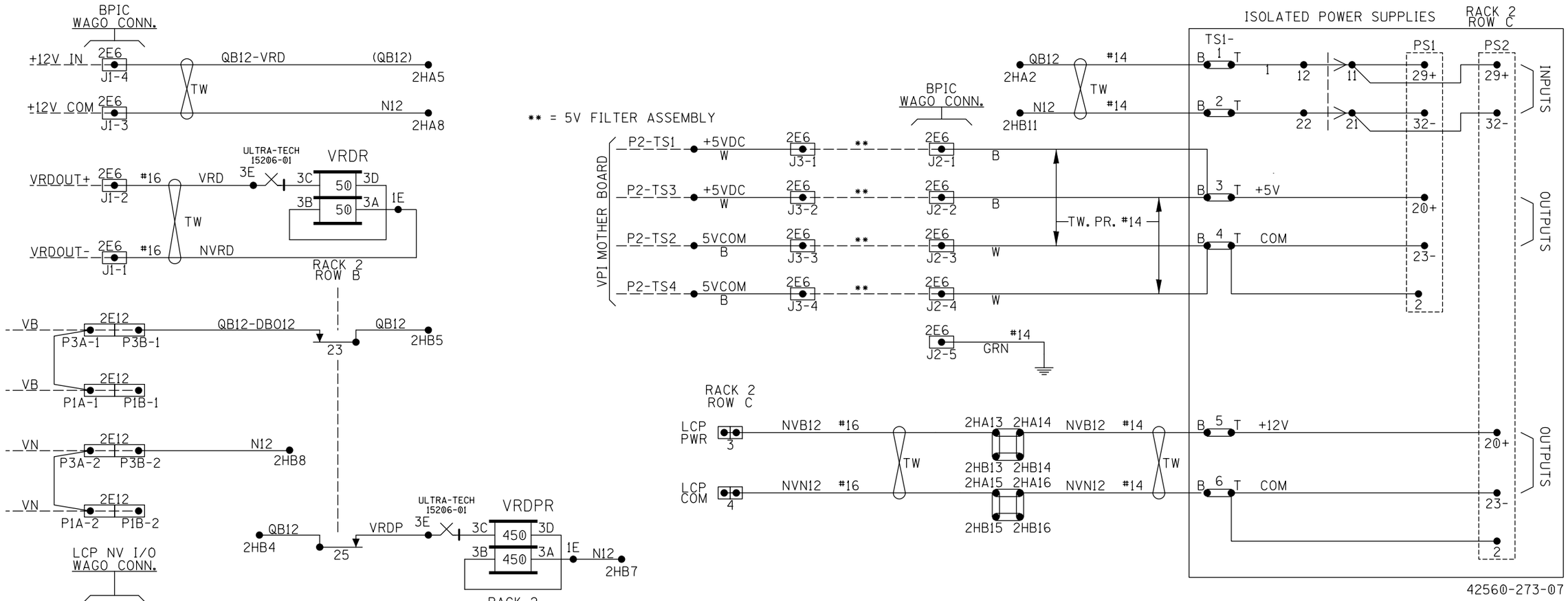

NO CHANGE

NOTE:

1) ALL WIRING TO BE #16 AWG UNLESS SHOWN OTHERWISE

VRDR, VRDPR, B12-N12 INPUT, 5V/12V ISOLATED POWER SUPPLIES FINK1, FINK2

DESIGNED BY: RAM 02-14-02	NORFOLK SOUTHERN		
DRAWN BY: SWS 02-14-02	OFFICE OF ASS'T. VICE PRESIDENT COMM. & SIGNAL, ATLANTA, GA.	M.P.: DH479.00	
CHECKED BY: RHW 02-28-02	MOSSER TO HANNIBAL GRIGGSVILLE		
IN SERVICE: DLE 09-08-03	SPRINGFIELD DISTRICT	FILE No. R-1308	
	CADD or DWG. No. SFDH47900.19	SHEET No. 19 of 35	

REVISION	06-07-16
INITIALS	IRE/JWB

PROPERTY
NORFOLK SOUTHERN RAILWAY CO.

CODE & FUNCTION ASSIGNMENT

ADDRESS	FIELD LOC.	TYPE	WORD	CONTROLS 1	2	3	4	5	6	7	8	INDICATIONS 9	10	11	12	13	14	15	16
7.550.508.021	GRIGGSVILLE	VPI	1	1 NWS	1 RWS	2W HS	2E HS	2W TBN	2W TBF	2E TBN	2E TBF	2W TK	1 TK	2E ATK	2E TK	1 NWK	1 RWK	2W HGK	2E HGK
			2	2WA TBN	2WA TBF	1 TBN	1 TBF				SMS	2W TBK	2E TBK	2WA TBK	1 TBK	POK	LOK	LCK	SMK
			3															FINK 1	FINK 2
			4									1ET1 4765	1ET2 4765	1ET3 4765	1ET4 4765	1ET5 4765	1ET6 4765 (SP.)	1ET7 4765 (SP.)	1ET8 4765 (SP.)

CSEX3

GRIGGSVILLE
M.P. 479.00
CRC(3B13)
CKSUM(59A2)
04-09-03 EVN

GRIGGSVILLE
M.P. 479.00
CRC(F1DD)
CKSUM(8779)
04-09-03 ODD

CPU/PD EPROM TAGS

GRIGGSVILLE
M.P. 479.00
U18 27C010
CKSUM(A20A) CRC(5140)
04-09-03

GRIGGSVILLE
M.P. 479.00
U19 27C010
CKSUM(C277) CRC(9249)
04-09-03

VSC EPROM TAG

GRIGGSVILLE
M.P. 479.00
VB1 27C128
CKSUM(0A49) CRC(32CD)
04-09-03

TROUBLE CODE	INDICATION
TROUBLE CODE 1	GND FAULT MONITOR - OK
TROUBLE CODE 2	GND FAULT MONITOR - FAULT
TROUBLE CODE 3	LOW SIGNAL BATTERY
TROUBLE CODE 4	POWER OFF
TROUBLE CODE 5	LAMP OUT
TROUBLE CODE 6	NOT USED - SPARE
TROUBLE CODE 7	NOT USED - SPARE
TROUBLE CODE 8	NOT USED - SPARE

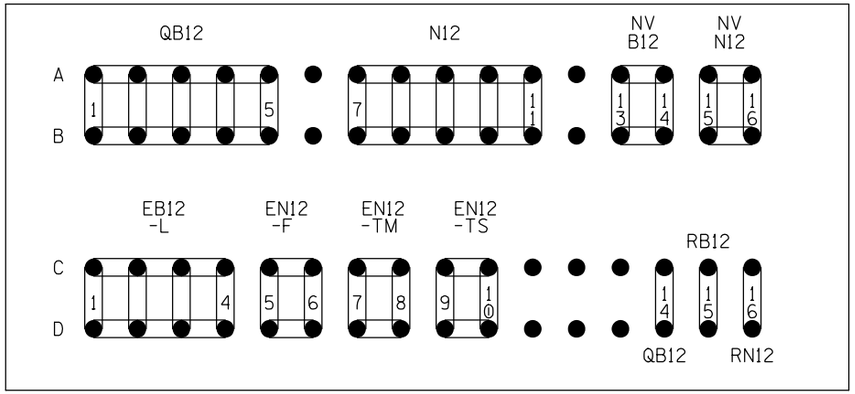

RACK 2 ROW H
(REAR VIEW)

NOTE:
INSTALL TEST NUTS BETWEEN
(2HC14 & 2HD14)-(2HC15 & 2HD15)
(2HC16 & 2HD16)

NO CHANGE

CODE ASSIGNMENT, EPROM INFORMATION

DESIGNED BY: RAM 02-14-02	NORFOLK SOUTHERN		
DRAWN BY: SWS 02-14-02	OFFICE OF ASS'T. VICE PRESIDENT COMM. & SIGNAL, ATLANTA, GA.	M.P.: DH479.00	
CHECKED BY: RHW 02-28-02	MOSSER TO HANNIBAL GRIGGSVILLE		
IN SERVICE: DLE 09-08-03	SPRINGFIELD DISTRICT	FILE No. R-1308	
	CADD or DWG. No. SFDH47900.20	SHEET No. 20 of 35	

REVISION	06-07-16
INITIALS	IRE/JWB

PROPERTY
NORFOLK SOUTHERN RAILWAY CO.

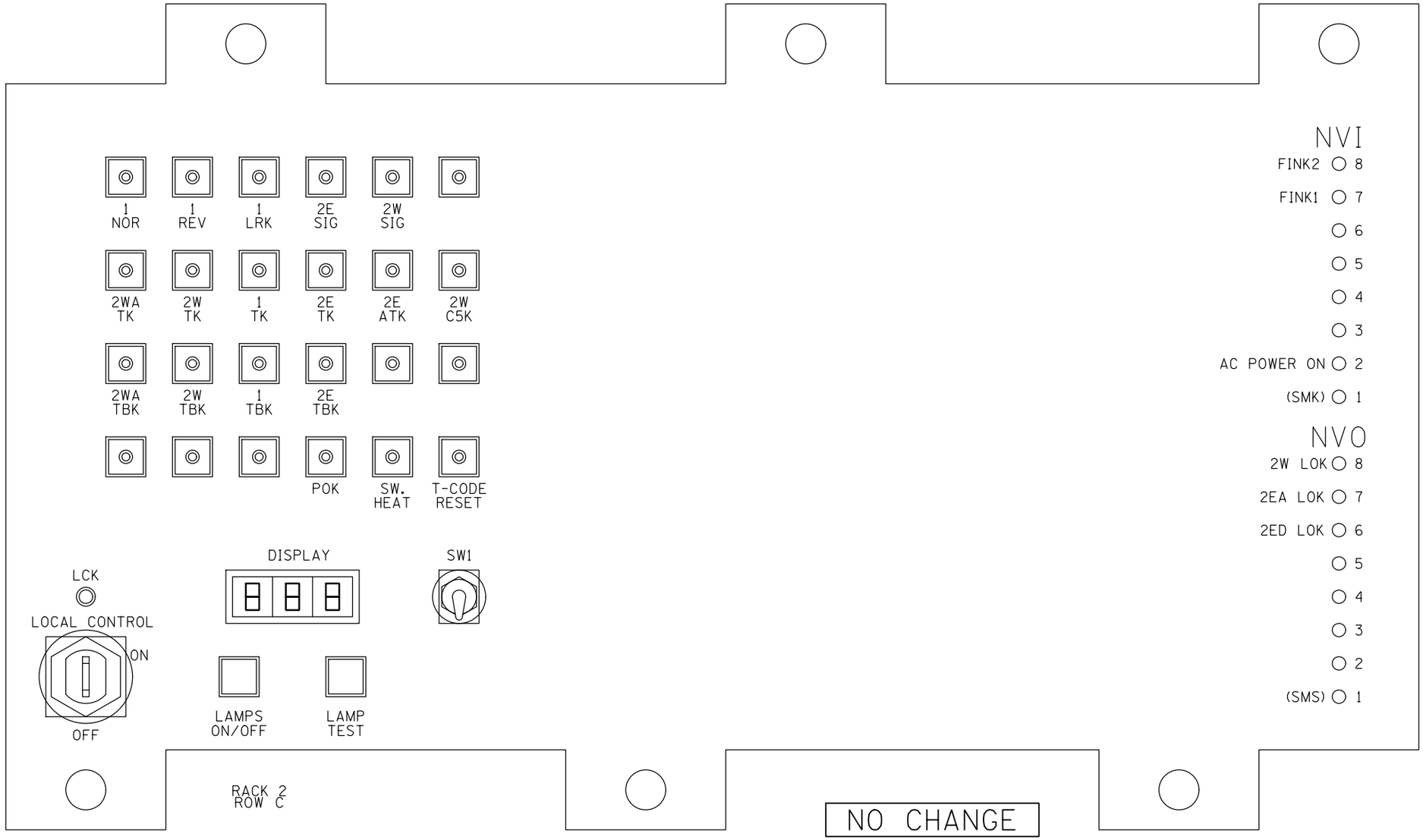

NO CHANGE

LOCAL CONTROL PANEL FRONT VIEW

NOTES:

2WATK IS A LOCAL INDICATION AND IS NOT SENT TO THE OFFICE FROM THIS LOCATION.
1LRK IS A LOCAL INDICATION AND IS NOT SENT TO THE OFFICE.
ANY LOK LAMP ILLUMINATED SENDS THE LOK BIT TO THE OFFICE.
ANY TROUBLE CODE RECEIVED (EXCEPT T-CODE 1) WILL LIGHT INDICATION.
PRESSING T-CODE RESET (A LOCAL CONTROL) WILL TURN OFF LIGHT AND INDICATION.

SHIELDED DATA CABLE

CSEX3 BPIC SLOT 5 PORT 3 J3 — RJ-45 ——— RJ-45 — LCP SERIAL PORT

DESIGNED BY: RAM	02-14-02
DRAWN BY: SWS	02-14-02
CHECKED BY: RHW	02-28-02
IN SERVICE: DLE	09-08-03

NORFOLK SOUTHERN

OFFICE OF ASS'T. VICE PRESIDENT COMM. & SIGNAL, ATLANTA, GA. — M.P.: DH479.00

MOSSER TO HANNIBAL
GRIGGSVILLE

SPRINGFIELD DISTRICT — FILE No. R-1308

CADD or DWG. No. SFDH47900.21 — SHEET No. 21 of 35

REVISION	06-07-16
INITIALS	IRE/JWB

PROPERTY
NORFOLK SOUTHERN RAILWAY CO.

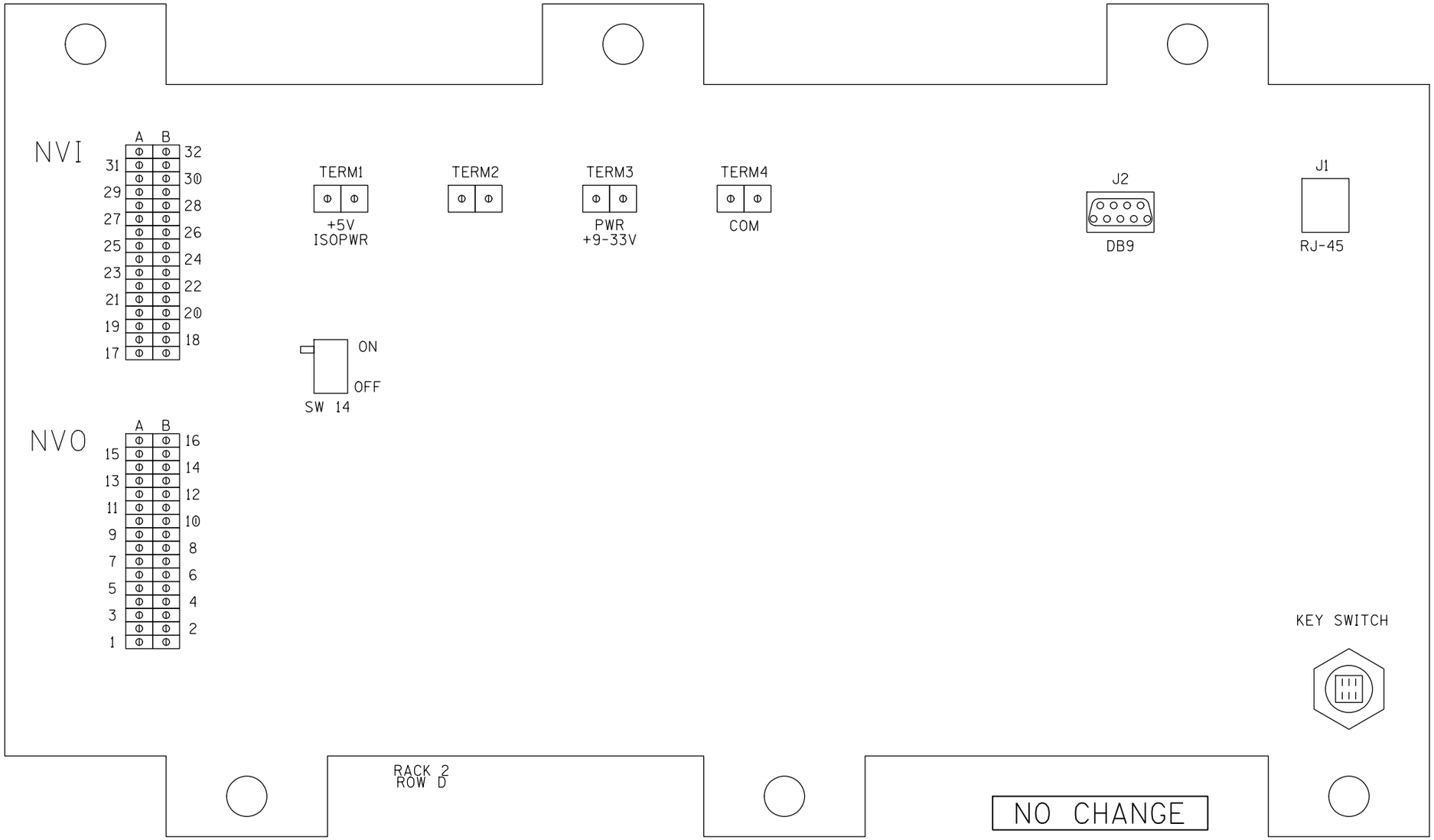

LOCAL CONTROL PANEL REAR VIEW

DESIGNED BY: RAM 02-14-02	NORFOLK SOUTHERN		
DRAWN BY: SWS 02-14-02	OFFICE OF ASS'T. VICE PRESIDENT COMM. & SIGNAL, ATLANTA, GA.	M.P.: DH479.00	
CHECKED BY: RHW 02-28-02	MOSSER TO HANNIBAL GRIGGSVILLE		
IN SERVICE: DLE 09-08-03	SPRINGFIELD DISTRICT	FILE No. R-1308	
	CADD or DWG. No. SFDH47900.22	SHEET No. 22 of 35	

REVISION	06-07-16
INITIALS	IRE/JWB

PROPERTY
NORFOLK SOUTHERN RAILWAY CO.

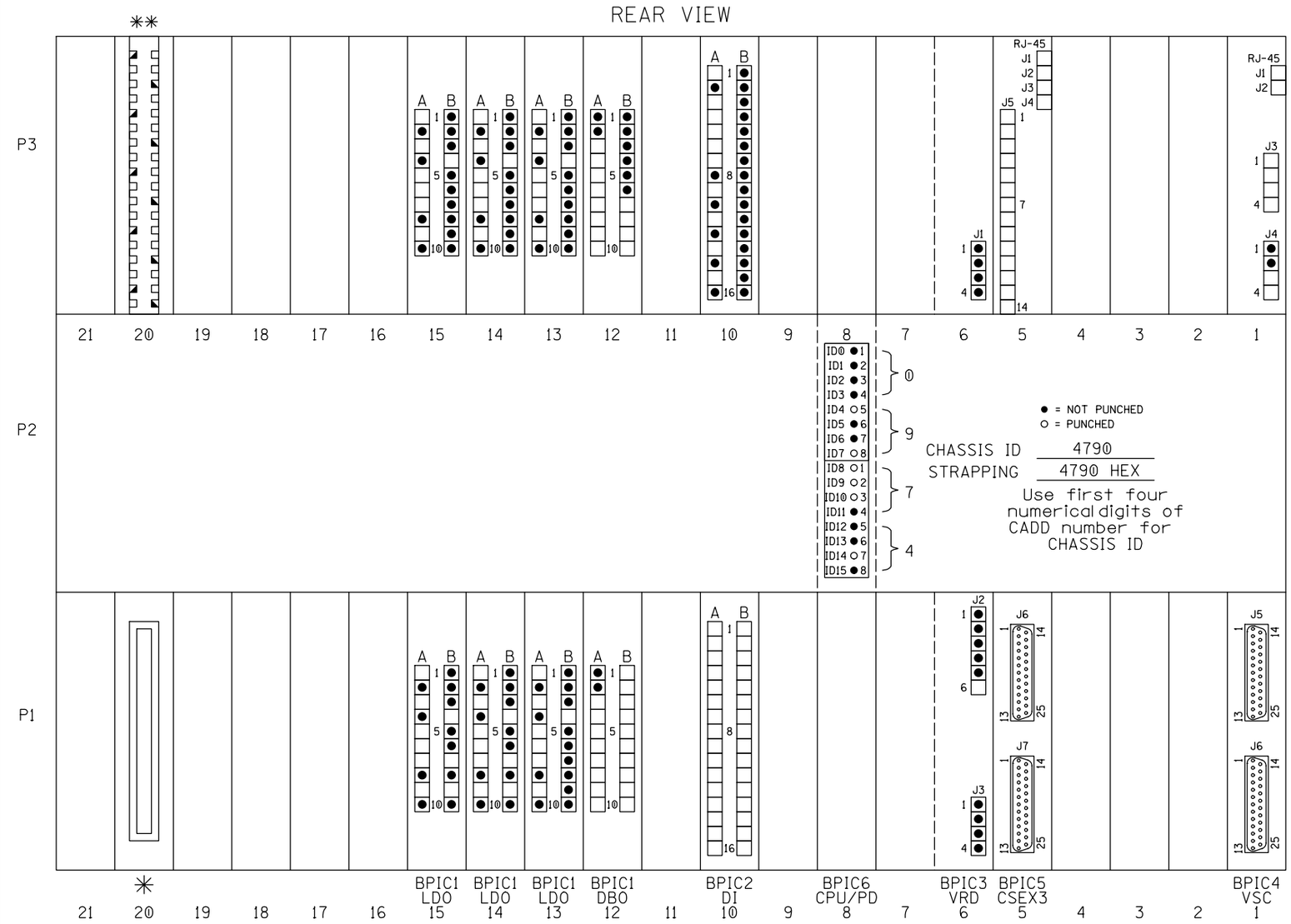

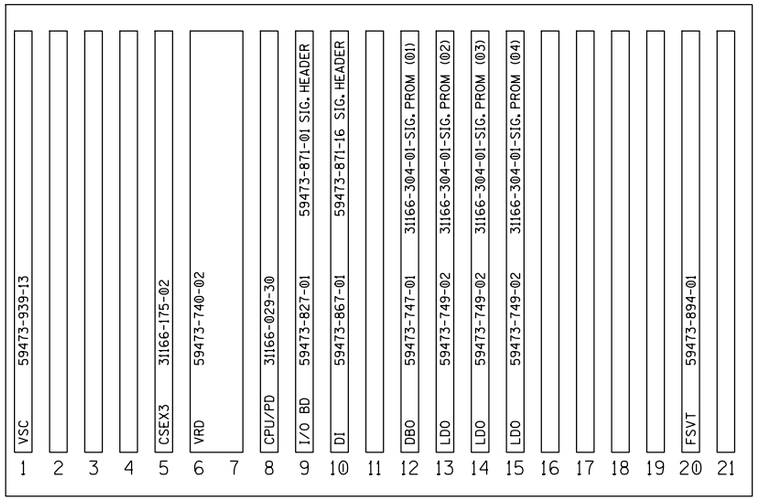

FRONT VIEW
BOARD ASSIGNMENT

RACK 2
ROW E

BPIC REGISTRATION CODES

SLOT #	REGISTRATION CODE (KEYING)
1	1-2-3
2	1-2-4
3	1-2-5
4	1-2-6
5	1-2-7
6	1-2-8
7	1-2-9
8	1-2-10
9	1-2-11
10	1-2-12
11	1-3-4

SLOT #	REGISTRATION CODE (KEYING)
12	1-3-5
13	1-3-6
14	1-3-7
15	1-3-8
16	1-3-9
17	1-3-10
18	1-3-11
19	1-3-12
20	1-4-5
21	1-4-6

SYSTEM BUS CABLE (9-WAY)
38216-395-07

NOTE:

◙ = BPIC WAGO TERMINAL WITH WIRE IN SLOT

□ = BPIC WAGO TERMINAL WITHOUT WIRE IN SLOT

USE WIRE FERRULE ON ALL WAGO TERMINALS

✳ = 60 WAY CONNECTOR P/N 58920-252-00

✳✳ = 36 WAY CONNECTOR P/N 58920-342-00

◪ = PCB RETAINER CLIP P/N 18058-008-00

BACKPLANE INTERFACE CARDS (BPIC)

1. VITAL OUTPUT 31166-194-01
2. VITAL INPUT 31166-195-01
3. VRD/LOGIC POWER 31166-197-01
4. VSC 31166-198-01
5. CSEX3 31166-199-01
6. CPU/PD 31166-336-01

NO CHANGE

VPI MODULE LAYOUT

DESIGNED BY:	
RAM	02-14-02
DRAWN BY:	
SWS	02-14-02
CHECKED BY:	
RHW	02-28-02
IN SERVICE:	
DLE	09-08-03

NORFOLK SOUTHERN

OFFICE OF ASS'T. VICE PRESIDENT COMM. & SIGNAL, ATLANTA, GA.

M.P.: DH479.00

MOSSER TO HANNIBAL
GRIGGSVILLE

SPRINGFIELD DISTRICT

FILE No. R-1308

CADD or DWG. No. SFDH47900.23

SHEET No. 23 of 35

REVISION	06-07-16
INITIALS	IRE/JWB

PROPERTY
NORFOLK SOUTHERN RAILWAY CO.

SLOT #	BOARD TYPE	NOTES	INSTALL JUMPERS AS FOLLOWS
1	GENRAKODE VSC		P2-42 TO P2-43; P2-43 TO P2-44; P2-44 TO P2-46; P2-46 TO P2-48
2	GENRAKODE VSC	1	P2-43 TO P2-44; P2-44 TO P2-46; P2-46 TO P2-48
3	PT. TO PT. VSC	1	P2-42 TO P2-44; P2-44 TO P2-46; P2-46 TO P2-48
4	PT. TO PT. VSC	1	P2-44 TO P2-46; P2-46 TO P2-48
5	CSEX 3		P2-38 TO P2-42; P2-43 TO P2-48; P2-44 TO P2-45; P2-45 TO P2-46; P2-46 TO P2-48
6	VITAL RELAY DRIVER (VRD)	2	P2-43 TO P2-46; P2-46 TO P2-48
7	VITAL RELAY DRIVER (VRD)	2	NONE
8	CPU/PD		NONE
9	I/O BUS BD.		P2-44 TO P2-45; P2-45 TO P2-46; P2-46 TO P2-47; P2-47 TO P2-48
10	DIRECT INPUT (DI)		P2-45 TO P2-46; P2-46 TO P2-47; P2-47 TO P2-48
11	DIRECT INPUT (DI)	1	P2-44 TO P2-46; P2-46 TO P2-47; P2-47 TO P2-48
12	DOUBLE BREAK OUTPUT (DBO)	3, 4	P2-46 TO P2-47; P2-47 TO P2-48 HI/LO BUS SEL: P2-40 TO P2-42
13	LAMP DRIVER OUTPUT (LDO)	3, 4	P2-46 TO P2-47; P2-47 TO P2-48 HI/LO BUS SEL: P2-40 TO P2-43 OUTPUT CK. ENBL: P2-35 TO P2-36
14	LAMP DRIVER OUTPUT (LDO)	3, 4	P2-44 TO P2-45; P2-45 TO P2-47; P2-47 TO P2-48 HI/LO BUS SEL: P2-40 TO P2-42 OUTPUT CK. ENBL: P2-35 TO P2-36
15	LAMP DRIVER OUTPUT (LDO)	3, 4	P2-44 TO P2-45; P2-45 TO P2-47; P2-47 TO P2-48 HI/LO BUS SEL: P2-40 TO P2-43 OUTPUT CK. ENBL: P2-35 TO P2-36
16	LAMP DRIVER OUTPUT (LDO)	1, 3, 4	P2-45 TO P2-47; P2-47 TO P2-48 HI/LO BUS SEL: P2-40 TO P2-42 OUTPUT CK. ENBL: P2-35 TO P2-36
17	LAMP DRIVER OUTPUT (LDO)	1, 3, 4	P2-45 TO P2-47; P2-47 TO P2-48 HI/LO BUS SEL: P2-40 TO P2-43 OUTPUT CK. ENBL: P2-35 TO P2-36
18	LAMP DRIVER OUTPUT (LDO)	1, 3, 4	P2-44 TO P2-47; P2-47 TO P2-48 HI/LO BUS SEL: P2-40 TO P2-42 OUTPUT CK. ENBL: P2-35 TO P2-36
19	LAMP DRIVER OUTPUT (LDO)	1, 3, 4	P2-44 TO P2-47; P2-47 TO P2-48 HI/LO BUS SEL: P2-40 TO P2-43 OUTPUT CK. ENBL: P2-35 TO P2-36
20	FIELD SETTABLE VITAL TIMER		P2-47 TO P2-48
21	CODE RATE GENERATOR	1, 5	P1-1 TO P1-10; P1-2 TO P1-12; P1-3 TO P1-14; P1-4 TO P1-16; P1-5 TO P1-9; P1-6 TO P1-11; P1-7 TO P1-13; P1-8 TO P1-15

P2 CONNECTOR
(USED IN SLOTS 1-21)

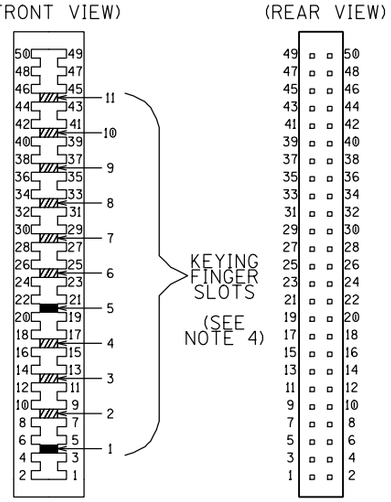

P2 MOTHERBOARD
(REAR VIEW)

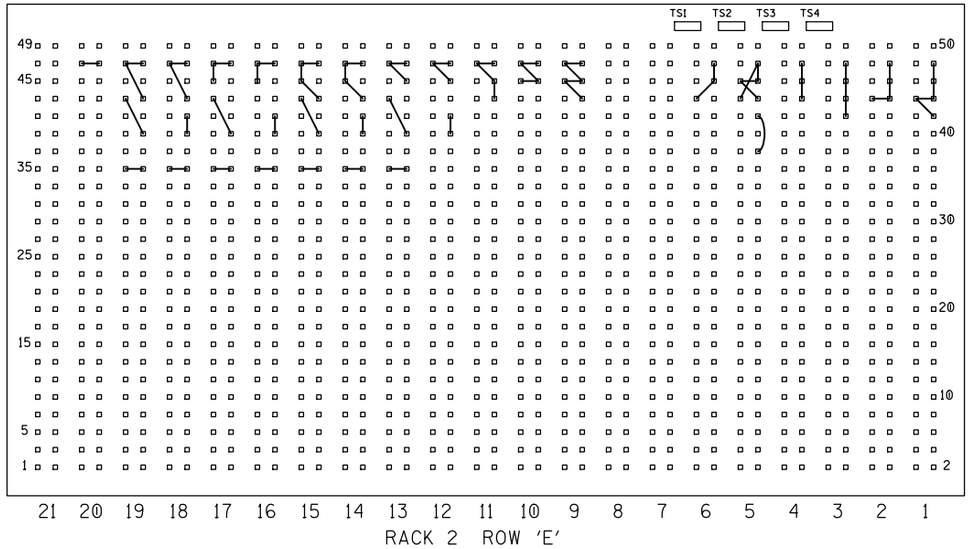

NO CHANGE

NOTES:

1) BOARD NOT INSTALLED IN "STANDARD" NS VPI MODULE. MOTHERBOARD SLOT PRE-WIRED AS SHOWN.

2) VRD BOARD OCCUPIES TWO (2) CHASSIS SLOTS. NO JUMPERS REQUIRED FOR SECOND SLOT.

3) CHASSIS SLOTS 13 THRU 19 PRE-WIRED AS LDO BOARD SLOTS. IF NECESSARY TO INSTALL DBO (OR OTHER VITAL OUTPUT BOARD) OUTPUT CHECK JUMPER IN POSITION P2-35 TO P2-36 WILL NEED TO BE REMOVED.

4) BOARD EDGE KEYING FOR SLOTS 13 THRU 19 IS CONFIGURED FOR LDO BOARDS. (KEYING SLOTS 1 & 5)
IF NECESSARY TO INSTALL OTHER VITAL OUTPUT BOARD IN ANY OF THESE SLOTS, CHANGE AS FOLLOWS:
DBO - KEYING SLOTS 1 & 4
SBO - KEYING SLOTS 1 & 3

5) CODE RATE GENERATOR BOARD (WHEN INSTALLED) IS ADDRESSED VIA JUMPERS ON A HEADER INSTALLED IN THE P1 POSITION. NO JUMPERS ARE NECESSARY ON THE P2 MOTHERBOARD.

VPI MOTHERBOARD JUMPERS

DESIGNED BY: RAM 02-14-02	NORFOLK SOUTHERN		
DRAWN BY: SWS 02-14-02	OFFICE OF ASS'T. VICE PRESIDENT COMM. & SIGNAL, ATLANTA, GA.	M.P.: DH479.00	
CHECKED BY: RHW 02-28-02	MOSSER TO HANNIBAL GRIGGSVILLE		
IN SERVICE: DLE 09-08-03	SPRINGFIELD DISTRICT	FILE No. R-1308	
	CADD or DWG. No. SFDH47900.24	SHEET No. 24 of 35	

REVISION INITIALS	06-07-16 IRE/JWB									

PROPERTY
NORFOLK SOUTHERN RAILWAY CO.

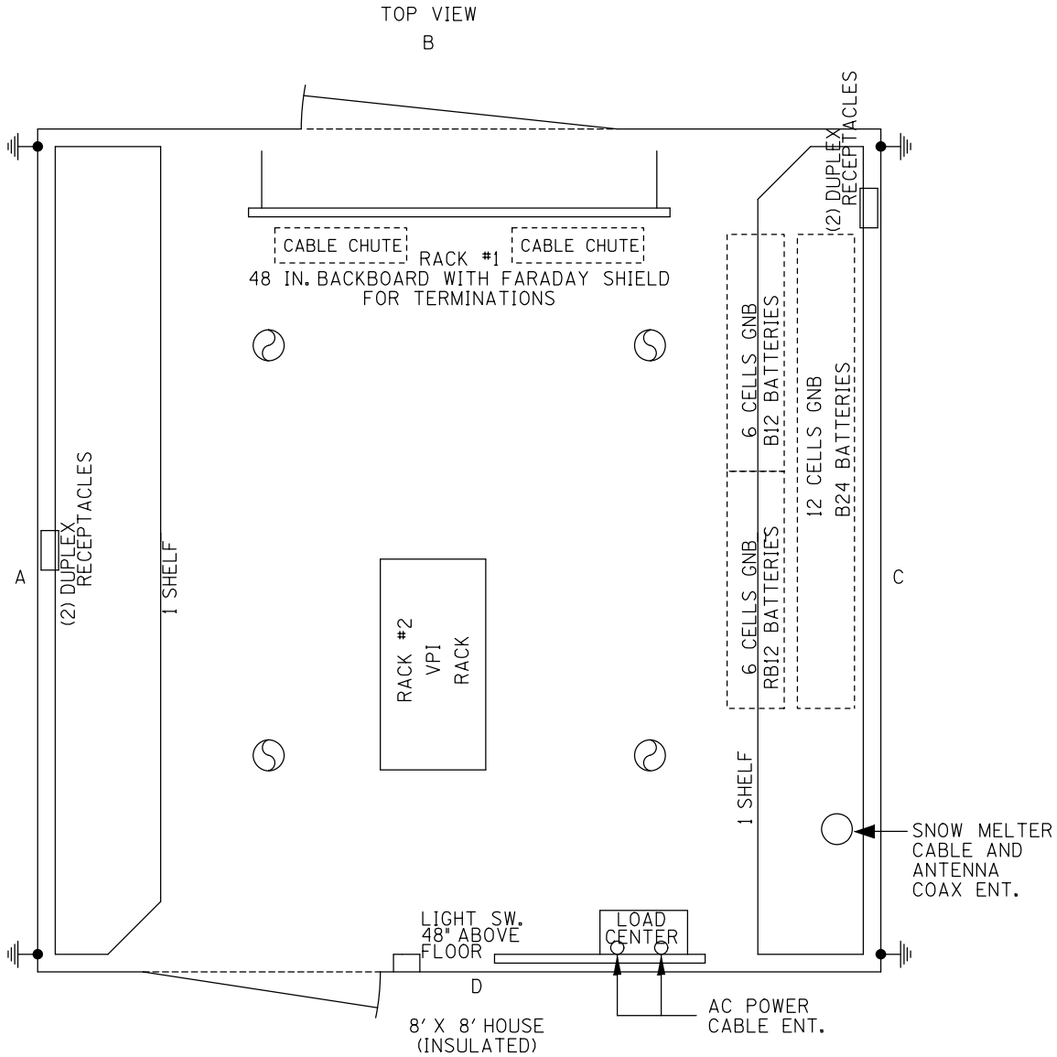

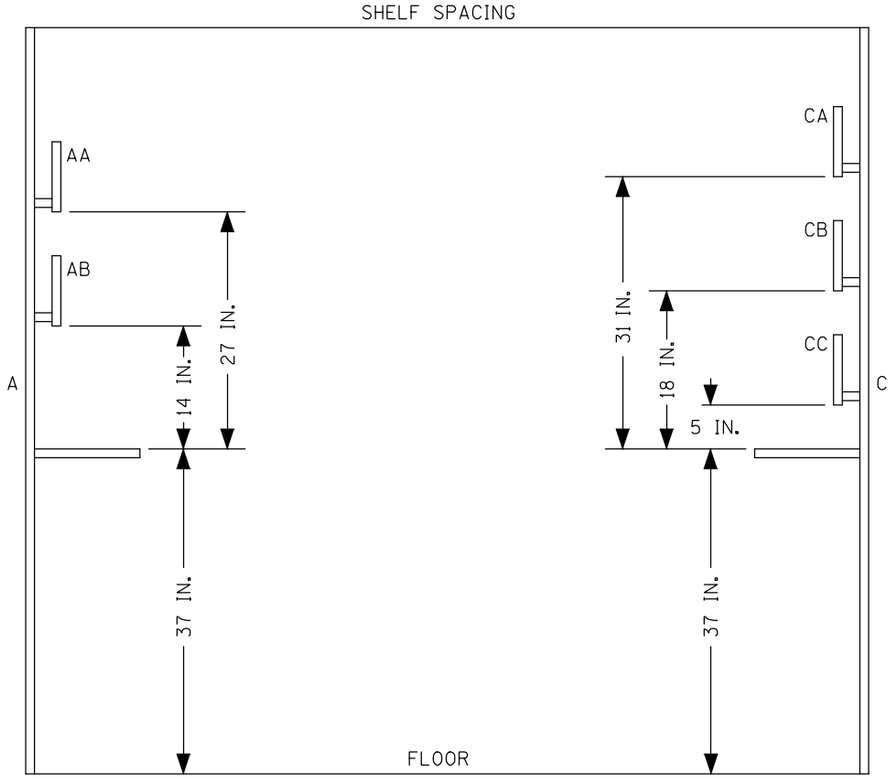

NO CHANGE

8'X8' HOUSE TOP VIEW, END VIEW

DESIGNED BY: RAM 02-14-02	NORFOLK SOUTHERN		
DRAWN BY: SWS 02-14-02	OFFICE OF ASS'T. VICE PRESIDENT COMM. & SIGNAL, ATLANTA, GA.	M.P.: DH479.00	
CHECKED BY: RHW 02-28-02	MOSSER TO HANNIBAL GRIGGSVILLE		
IN SERVICE: DLE 09-08-03	SPRINGFIELD DISTRICT	FILE No. R-1308	
	CADD or DWG. No. SFDH47900.25	SHEET No. 25 of 35	

REVISION	06-07-16
INITIALS	IRE/JWB

PROPERTY
NORFOLK SOUTHERN RAILWAY CO.

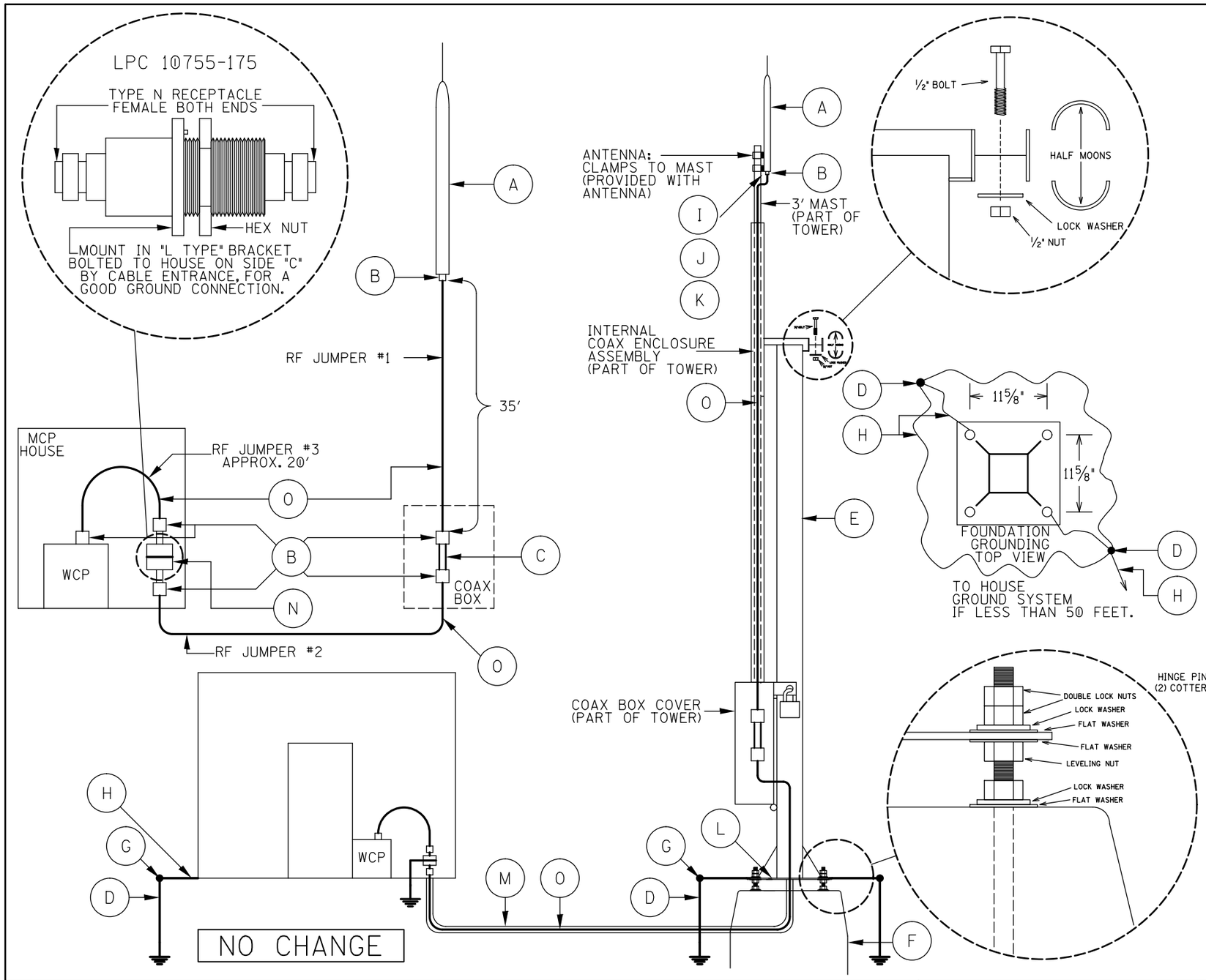

REF.	QUANITY	CLASS ITEM	DESCRIPTION
A	1 EA.	610-847812	ANTENNA, #DB-583-Y
B	7 EA.	610-244296	MALE CRIMP CON. TESSCO PN-14515
C	1 EA.	610-230298	N-FEMALE BARREL RFN-1013-1
D	3 EA.	670-000240	GROUND ROD, ⅝" x 8'
E	1 EA.	610-515147	WESTERN TOWER, TILT #RR40SQT
F	1 EA.	670-015231	TOWER FOUNDATION #S-2 5'-7"
G	12 EA.	165-323610	CADWELD #SBNT1161G
H	75 LF.	465-999054	39 WIRE #6
I	1 PK.	610-549411	VAPOR WRAP
J	2 EA.	165-899801	TAPE, ELECTRICAL
K	1 EA.	330-809007	SKOTCH KOTE
L	1 LB.	330-754004	DUCT SEAL
M	50 FT.	610-004179	CARFLEX
N	1 EA.	165-877067	PROTECTOR, LPC 10755-175
O	100 FT.	610-232273	RG8 CABLE, TESSCO PN-98109
		610-234357	CRIMP TOOL, N-MALE CONNECTOR

NOTE: ANTENNA SHOULD BE PLACED AS CLOSE AS POSSIBLE TO BUNGALOW SO RF JUMPER #2 IS NO LONGER THAN 35'. IF ANTENNA IS PLACED FURTHER THAN 35' YOU MAY HAVE TO USE ⅛" COAX CABLE IN PLACE OF THE ½".

COAX ENCLOSURE ASSEMBLY

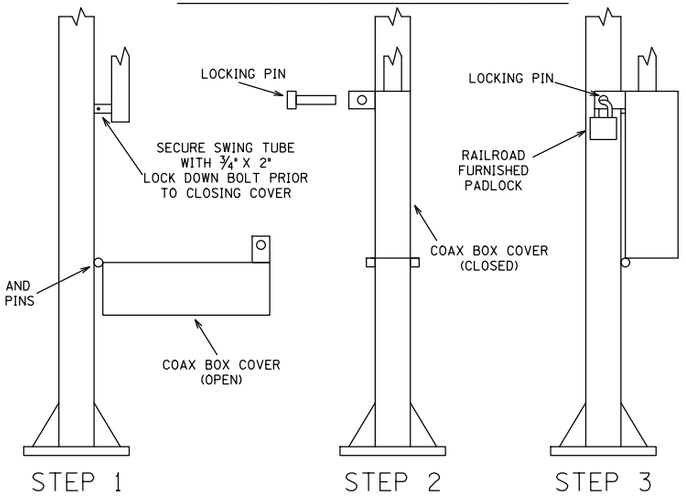

ANTENNA INSTALLATION

DESIGNED BY: RAM 02-14-02	NORFOLK SOUTHERN		
DRAWN BY: SWS 02-14-02	OFFICE OF ASS'T. VICE PRESIDENT COMM. & SIGNAL, ATLANTA, GA.	M.P.: DH479.00	
CHECKED BY: RHW 02-28-02	MOSSER TO HANNIBAL GRIGGSVILLE		
IN SERVICE: DLE 09-08-03	SPRINGFIELD DISTRICT	FILE No. R-1308	
	CADD or DWG. No. SFDH47900.26	SHEET No. 26 of 35	

REVISION	06-07-16								
INITIALS	IRE/JWB								

PROPERTY
NORFOLK SOUTHERN RAILWAY CO.

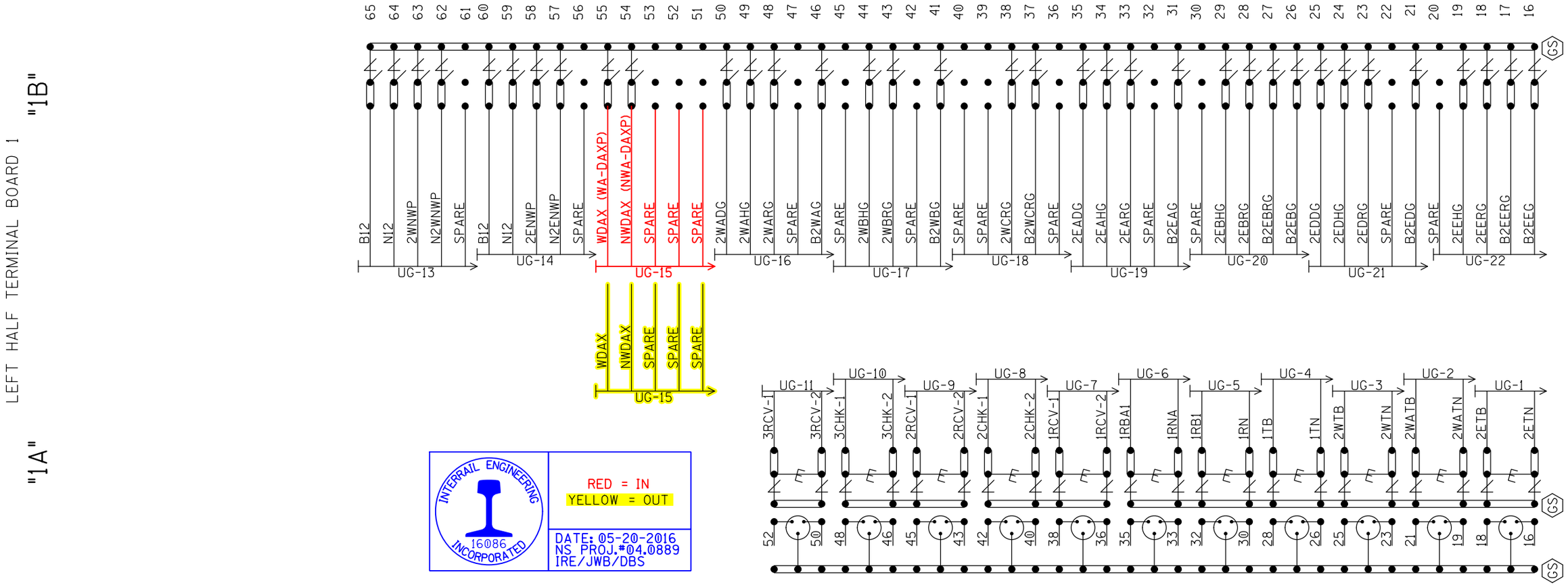

INTERRAIL ENGINEERING INCORPORATED 16086

RED = IN
YELLOW = OUT

DATE: 05-20-2016
NS PROJ.#04.0889
IRE/JWB/DBS

NOTE: INSTALL TEST LINKS ON ALL TRACK WIRES AND ON ALL LOW VOLTAGE UNDERGROUND CABLE TERMINATIONS.

= Heavy Duty Equalizer (022700-1X)

= Clearview Lightning Arrester (022485-28X)

= LPC-10560-51

GS = TERMINALS GROUNDED TO SHIELD. 12 WAY BLOCK TERMINALS USE SERMMI PART NO. 61223. 3 POST BLOCKS USE EITHER - R.H. - SERMMI PART NO. 61224 OR L.H. - SERMMI PART NO. 61224-1.

SEE FARADAY SHIELD DETAILS - 1A & 1B FOR HOW THIS PORTION OF THE FARADAY SHIELD IS PREDRILLED. ONLY INSTALL AND USE THE TERMINALS NEEDED.

BACKBOARD DETAIL - 1A & 1B

DESIGNED BY: RAM 02-14-02	NORFOLK SOUTHERN		
DRAWN BY: SWS 02-14-02	OFFICE OF ASS'T. VICE PRESIDENT COMM. & SIGNAL, ATLANTA, GA.	M.P.:	DH479.00
CHECKED BY: RHW 02-28-02	MOSSER TO HANNIBAL GRIGGSVILLE		
IN SERVICE: DLE 09-08-03	SPRINGFIELD DISTRICT	FILE No.	R-1308
	CADD or DWG. No. SFDH47900.27	SHEET No.	27 of 35

REVISION	06-07-16
INITIALS	IRE/JWB

PROPERTY
NORFOLK SOUTHERN RAILWAY CO.

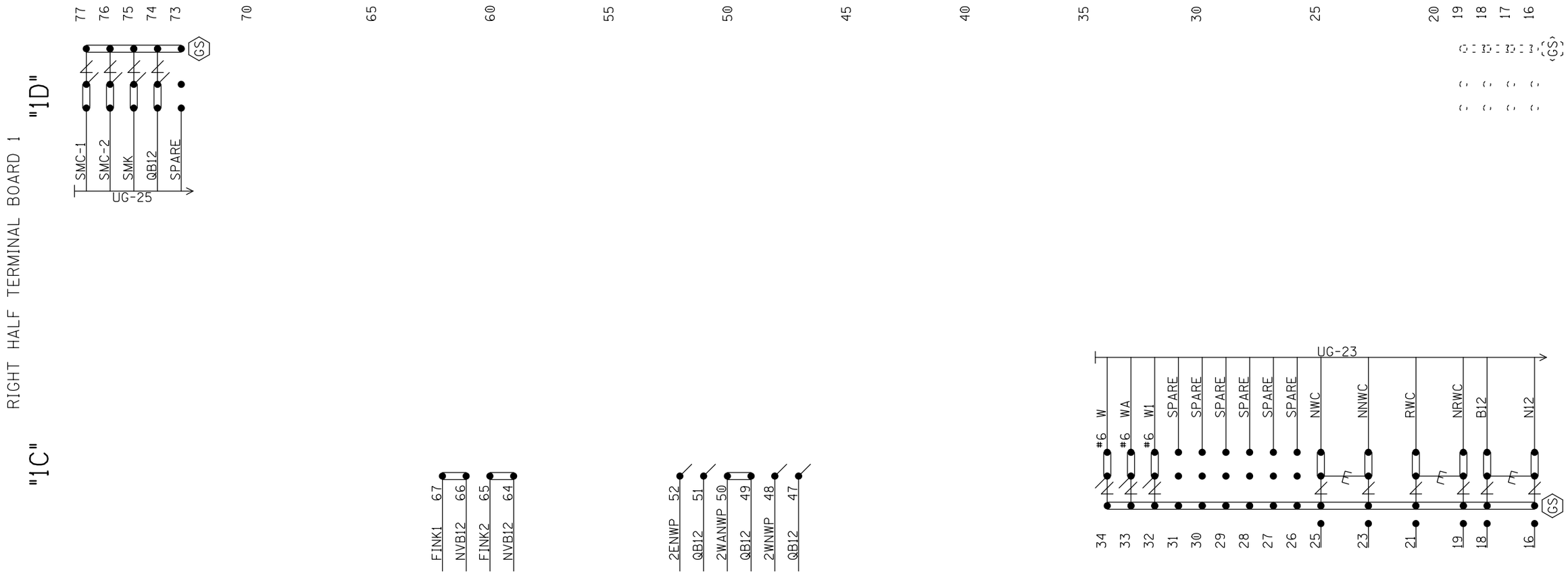

NOTE: INSTALL TEST LINKS ON ALL TRACK WIRES AND ON ALL LOW VOLTAGE UNDERGROUND CABLE TERMINATIONS.

= Heavy Duty Equalizer (022700-1X)

Clearview = Lightning Arrester (022485-28X)

= LPC-10560-51

GS = TERMINALS GROUNDED TO SHIELD. 12 WAY BLOCK TERMINALS USE SERMMI PART NO. 61223. 3 POST BLOCKS USE EITHER - R.H. - SERMMI PART NO. 61224 OR L.H. - SERMMI PART NO. 61224-1.

SEE FARADAY SHIELD DETAILS - 1C & 1D FOR HOW THIS PORTION OF THE FARADAY SHIELD IS PREDRILLED. ONLY INSTALL AND USE THE TERMINALS NEEDED.

NO CHANGE

BACKBOARD DETAIL - 1C & 1D

DESIGNED BY: RAM 02-14-02	NORFOLK SOUTHERN		
DRAWN BY: SWS 02-14-02	OFFICE OF ASS'T. VICE PRESIDENT COMM. & SIGNAL, ATLANTA, GA.	M.P.: DH479.00	
CHECKED BY: RHW 02-28-02	MOSSER TO HANNIBAL GRIGGSVILLE		
IN SERVICE: DLE 09-08-03	SPRINGFIELD DISTRICT	FILE No. R-1308	
	CADD or DWG. No. SFDH47900.28	SHEET No. 28 of 35	

REVISION	06-07-16
INITIALS	IRE/JWB

PROPERTY
NORFOLK SOUTHERN RAILWAY CO.

NOTE: IF THE FARADAY SHIELD WOULD EVER NEED TO BE DRILLED IN THE FIELD, PROPER PRECAUTIONS MUST BE TAKEN TO INSURE METAL SHAVINGS DO NOT GET INTO EXISTING TERMINALS/WIRES.

AREA BELOW IS SCALED WITH AS=.75

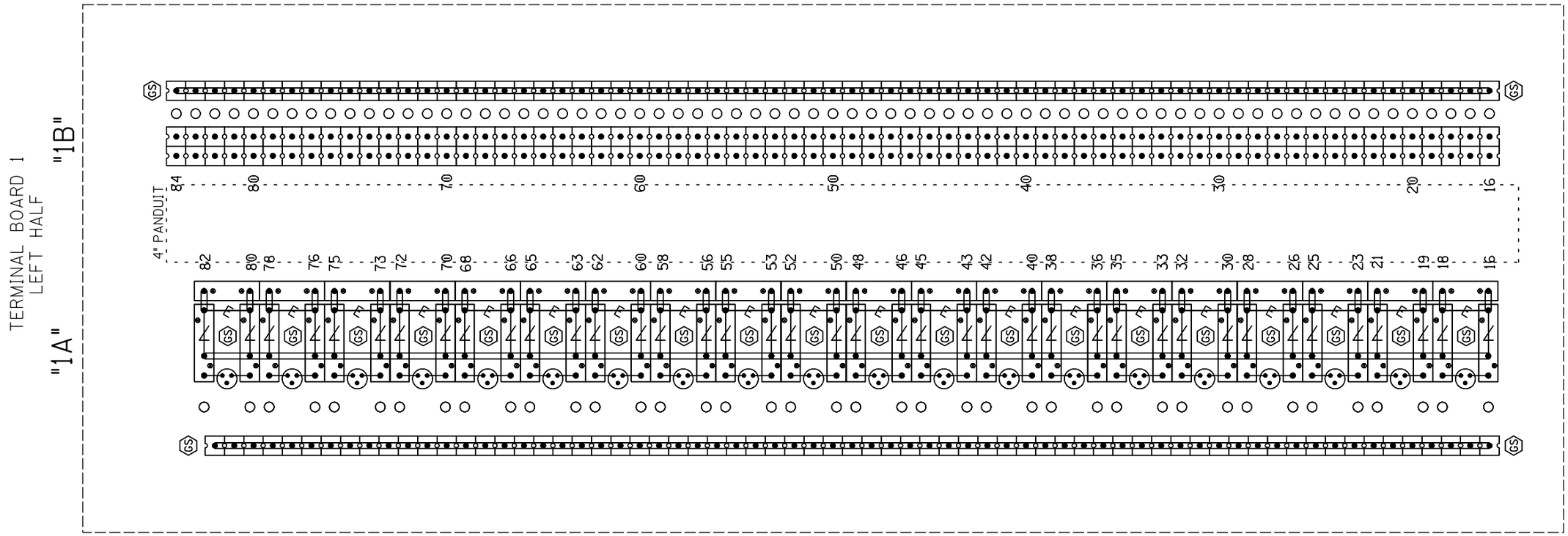

= Heavy Duty Equalizer (022700-1X)

Clearview = Lightning Arrester (022485-28X)

= LPC-10560-51

GS = TERMINALS GROUNDED TO SHIELD. 12 WAY BLOCK TERMINALS USE SERMMI PART NO. 61223. 3 POST BLOCKS USE EITHER - R.H. - SERMMI PART NO. 61224 OR L.H. - SERMMI PART NO. 61224-1.

NO CHANGE

FARADAY SHIELD DETAIL - 1A & 1B

= INDICATES PLACEMENT OF PANDUIT

THIS SHEET IS FOR REFERENCE ONLY, TO REFLECT HOW THE FARADAY SHIELD IS PREDRILLED. ONLY INSTALL AND USE THE TERMINALS NEEDED.

DESIGNED BY: RAM	02-14-02
DRAWN BY: SWS	02-14-02
CHECKED BY: RHW	02-28-02
IN SERVICE: DLE	09-08-03

NORFOLK SOUTHERN

OFFICE OF ASS'T. VICE PRESIDENT COMM. & SIGNAL, ATLANTA, GA. M.P.: DH479.00

MOSSER TO HANNIBAL GRIGGSVILLE

SPRINGFIELD DISTRICT FILE No. R-1308

CADD or DWG. No. SFDH47900.29 SHEET No. 29 of 35

REVISION	06-07-16
INITIALS	IRE/JWB

PROPERTY NORFOLK SOUTHERN RAILWAY CO.

NOTE: IF THE FARADAY SHIELD WOULD EVER NEED TO BE DRILLED IN THE FIELD, PROPER PRECAUTIONS MUST BE TAKEN TO INSURE METAL SHAVINGS DO NOT GET INTO EXISTING TERMINALS/WIRES.

AREA BELOW IS SCALED WITH AS=.75

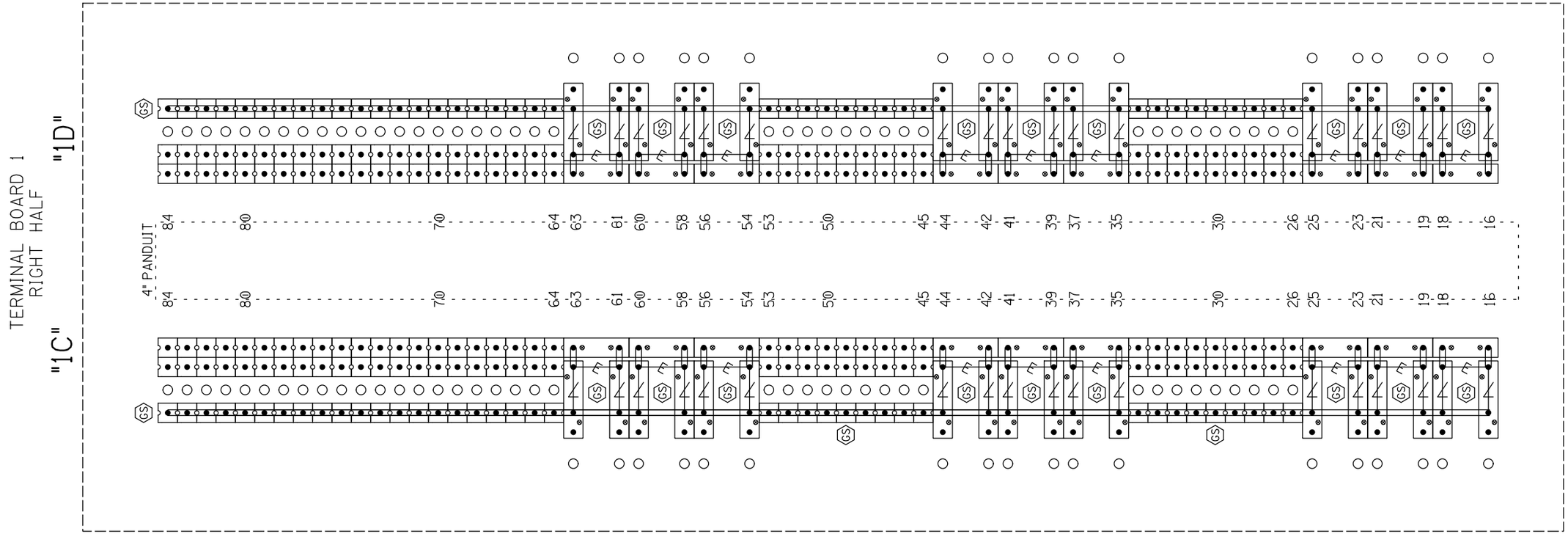

= Heavy Duty Equalizer (022700-1X)

= Clearview Lightning Arrester (022485-28X)

= LPC-10560-51

GS = TERMINALS GROUNDED TO SHIELD. 12 WAY BLOCK TERMINALS USE SERMMI PART NO. 61223. 3 POST BLOCKS USE EITHER - R.H. - SERMMI PART NO. 61224 OR L.H. - SERMMI PART NO. 61224-1.

NO CHANGE

FARADAY SHIELD DETAIL - 1C & 1D

= INDICATES PLACEMENT OF PANDUIT

THIS SHEET IS FOR REFERENCE ONLY, TO REFLECT HOW THE FARADAY SHIELD IS PREDRILLED. ONLY INSTALL AND USE THE TERMINALS NEEDED.

REVISION	06-07-16										
INITIALS	IRE/JWB										

PROPERTY
NORFOLK SOUTHERN RAILWAY CO.

DESIGNED BY:	RAM 02-14-02
DRAWN BY:	SWS 02-14-02
CHECKED BY:	RHW 02-28-02
IN SERVICE:	DLE 09-08-03

NORFOLK SOUTHERN

OFFICE OF ASS'T. VICE PRESIDENT COMM. & SIGNAL, ATLANTA, GA. M.P.: DH479.00

MOSSER TO HANNIBAL
GRIGGSVILLE

SPRINGFIELD DISTRICT FILE No. R-1308

CADD or DWG. No. SFDH47900.30 SHEET No. 30 of 35

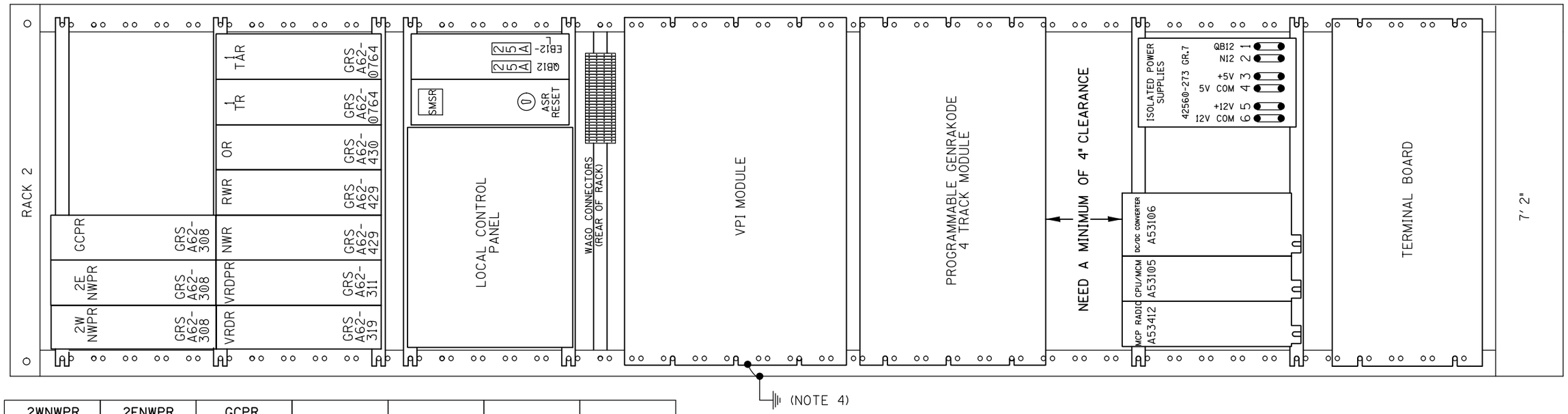

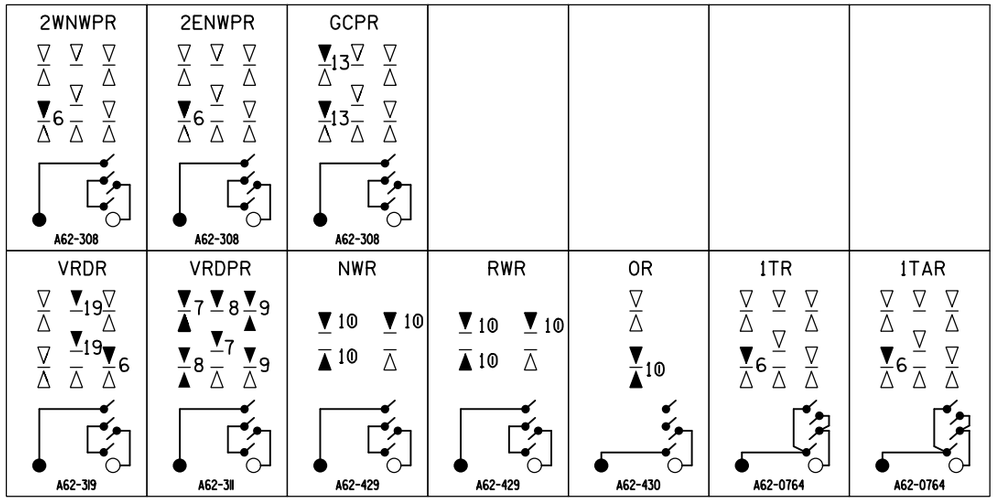

RELAY DETAILS (ROW A)

RELAY DETAILS (ROW B)

SAFETRAN, ALSTOM (GRS) RELAY CROSS REFERENCE LIST

SAFETRAN		ALSTOM (GRS)
400015	—	A62-319
400003	—	A62-308
400011	—	A62-276
400022	—	A62-311
400520	—	A62-429
400522	—	A62-0764
400601	—	A62-430

VPI RACK

1. VPI CHASSIS TO BE CONNECTED TO GROUND POST WITH A BRAIDED CONDUCTOR.
2. ALL ADDITIONAL CIRCUIT BOARD AND PROMS FOR THE VPI AND GENRAKODE MODULES ARE TO BE INSTALLED BY FIELD TEST PERSONNEL.
3. ALL RACK MOUNTED ELECTRONIC CHASSIS TO BE MOUNTED USING SERRATED WASHERS TO PROVIDE CHASSIS GROUND.
4. WIRE CONNECTED TO GROUND BUS BAR.

NO CHANGE

DESIGNED BY: RAM	02-14-02
DRAWN BY: SWS	02-14-02
CHECKED BY: RHW	02-28-02
IN SERVICE: DLE	09-08-03

NORFOLK SOUTHERN

OFFICE OF ASS'T. VICE PRESIDENT COMM. & SIGNAL, ATLANTA, GA. M.P.: DH479.00

MOSSER TO HANNIBAL GRIGGSVILLE

SPRINGFIELD DISTRICT FILE No. R-1308

CADD or DWG. No. SFDH47900.31 SHEET No. 31 of 35

REVISION	06-07-16
INITIALS	IRE/JWB

PROPERTY NORFOLK SOUTHERN RAILWAY CO.

SIDE "A"

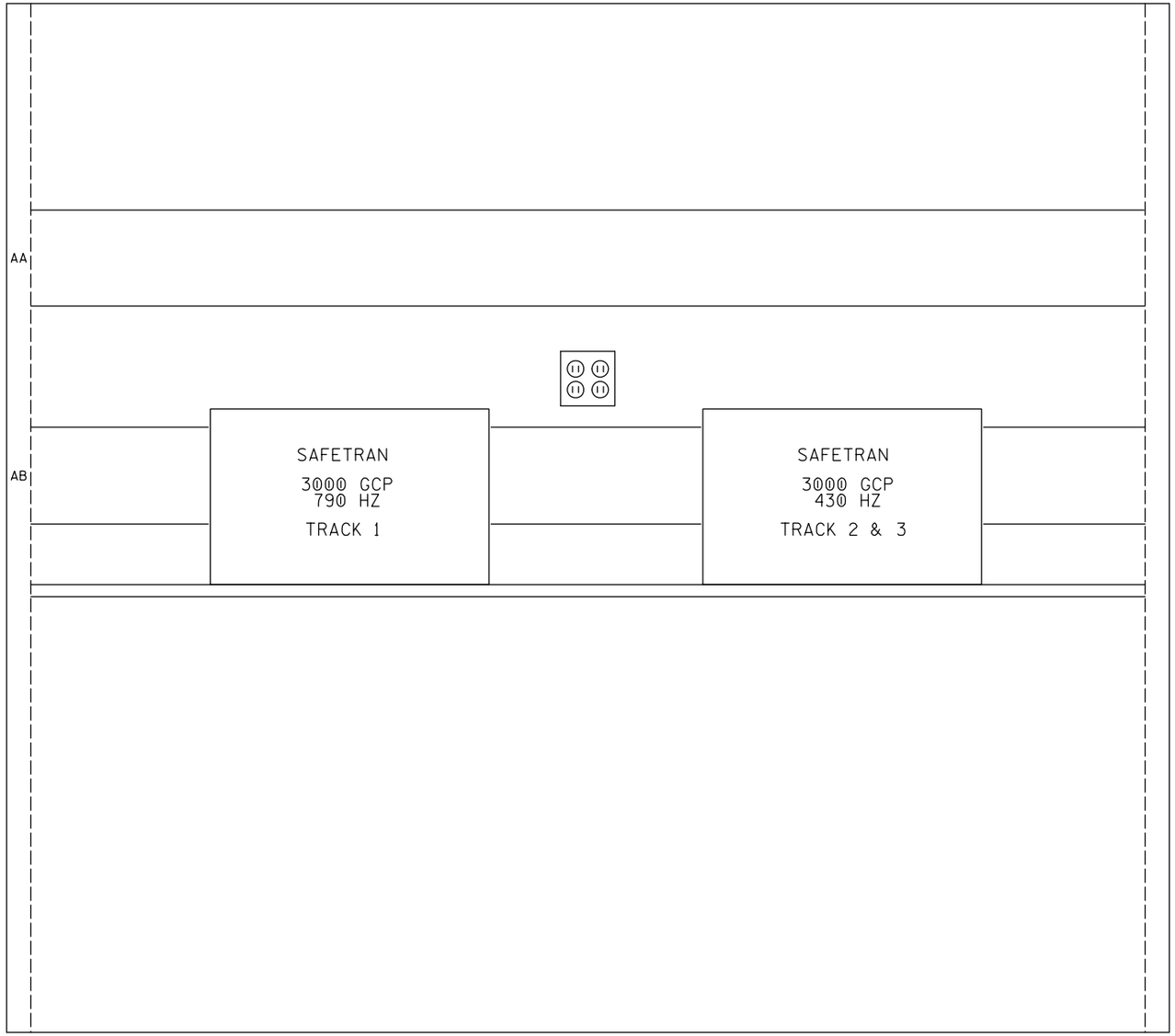

NO CHANGE

WHEN MAKING REVISIONS SCALE TO AS=1.333

WHEN REVISIONS ARE FINAL SCALE TO AS=.75

8'X8' HOUSE SIDE "A"

DESIGNED BY: RAM 02-14-02	NORFOLK SOUTHERN		
DRAWN BY: SWS 02-14-02	OFFICE OF ASS'T. VICE PRESIDENT COMM. & SIGNAL, ATLANTA, GA.	M.P.:	DH479.00
CHECKED BY: RHW 02-28-02	MOSSER TO HANNIBAL GRIGGSVILLE		
IN SERVICE: DLE 09-08-03	SPRINGFIELD DISTRICT	FILE No.	R-1308
	CADD or DWG. No. SFDH47900.32	SHEET No.	32 of 35

REVISION	06-07-16
INITIALS	IRE/JWB

PROPERTY
NORFOLK SOUTHERN RAILWAY CO.

SIDE "C"

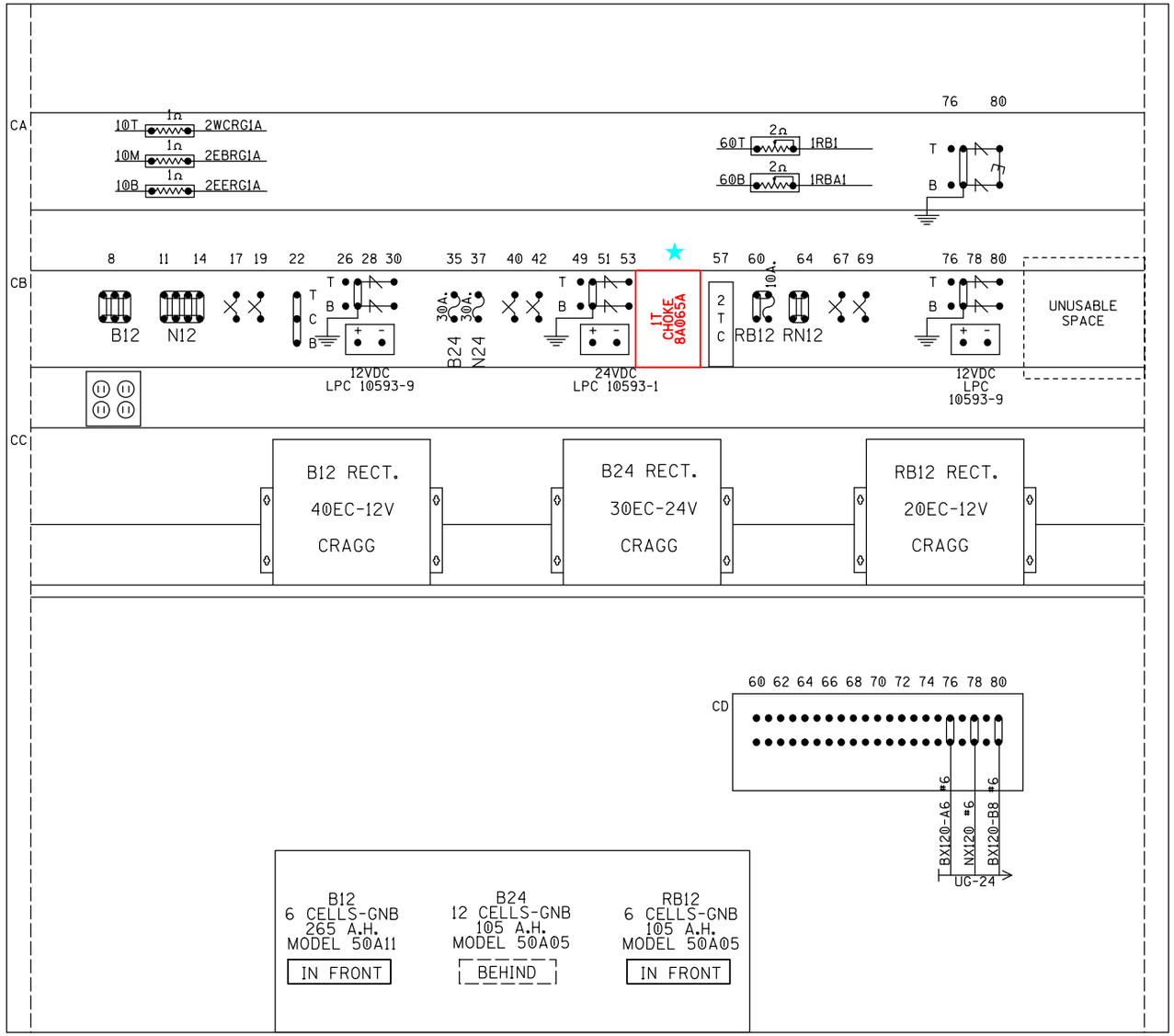

★ = DRAFTING CORRECTION

INTERRAIL ENGINEERING 16086 INCORPORATED

RED = IN
YELLOW = OUT

DATE: 05-20-2016
NS PROJ.#04.0889
IRE/JWB/DBS

0 FT. 1 FT. 2 FT. 3 FT.

WHEN MAKING REVISIONS SCALE TO AS=1.333

WHEN REVISIONS ARE FINAL SCALE TO AS=.75

8'X8' HOUSE SIDE "C"

DESIGNED BY: RAM 02-14-02	NORFOLK SOUTHERN		
DRAWN BY: SWS 02-14-02	OFFICE OF ASS'T. VICE PRESIDENT COMM. & SIGNAL, ATLANTA, GA.	M.P.:	DH479.00
CHECKED BY: RHW 02-28-02	MOSSER TO HANNIBAL GRIGGSVILLE		
IN SERVICE: DLE 09-08-03	SPRINGFIELD DISTRICT	FILE No.	R-1308
	CADD or DWG. No. SFDH47900.33	SHEET No.	33 of 35

REVISION	06-07-16								
INITIALS	IRE/JWB								

PROPERTY
NORFOLK SOUTHERN RAILWAY CO.

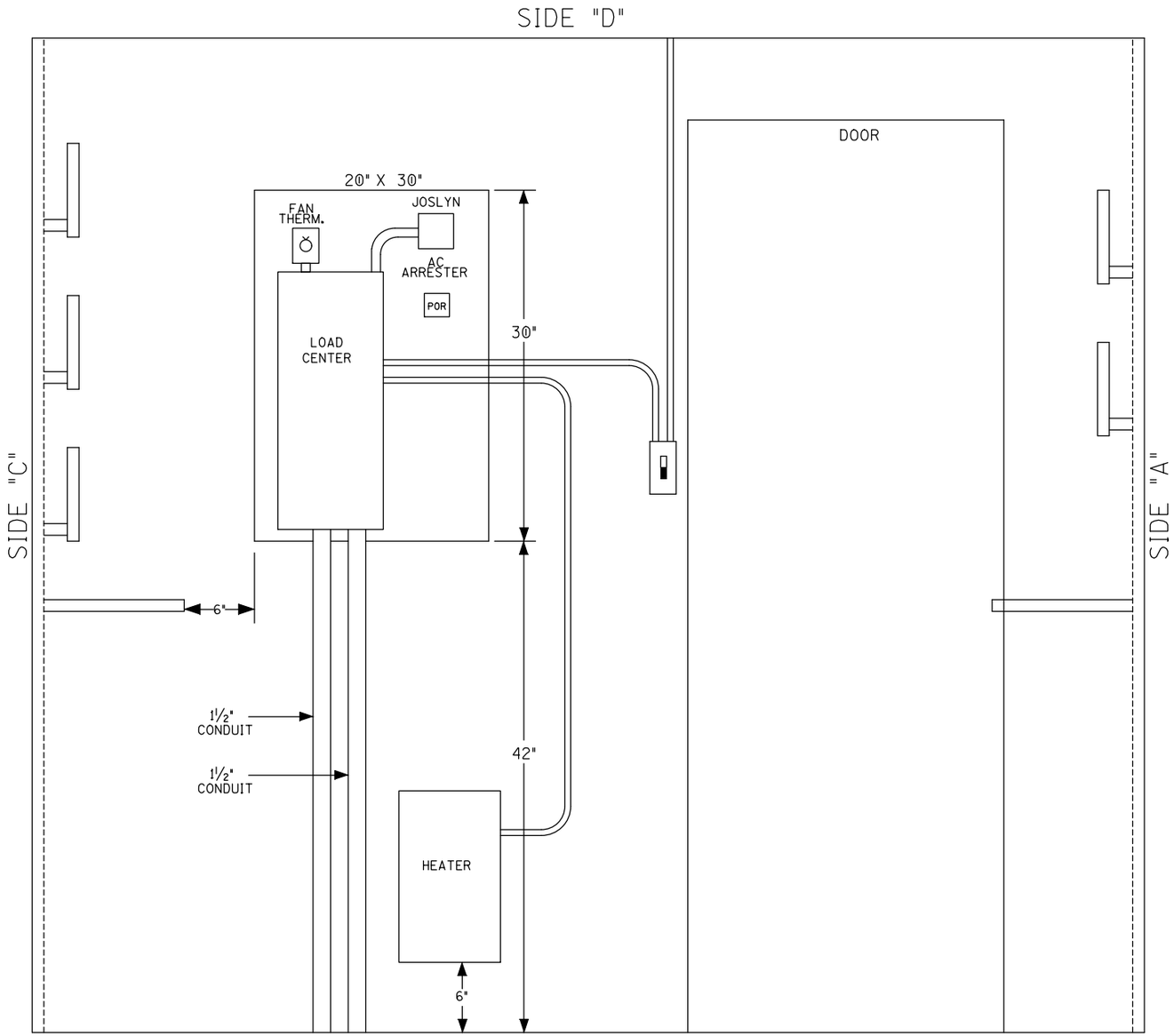

NO CHANGE

WHEN MAKING REVISIONS SCALE TO AS=1.333

WHEN REVISIONS ARE FINAL SCALE TO AS=.75

8'X8' HOUSE SIDE "D" AND LOAD CENTER

DESIGNED BY: RAM 02-14-02	NORFOLK SOUTHERN		
DRAWN BY: SWS 02-14-02	OFFICE OF ASS'T. VICE PRESIDENT COMM. & SIGNAL, ATLANTA, GA.	M.P.: DH479.00	
CHECKED BY: RHW 02-28-02	MOSSER TO HANNIBAL GRIGGSVILLE		
IN SERVICE: DLE 09-08-03	SPRINGFIELD DISTRICT	FILE No. R-1308	
	CADD or DWG. No. SFDH47900.34	SHEET No. 34 of 35	

REVISION	06-07-16									
INITIALS	IRE/JWB									

PROPERTY
NORFOLK SOUTHERN RAILWAY CO.

GRIGGSVILLE

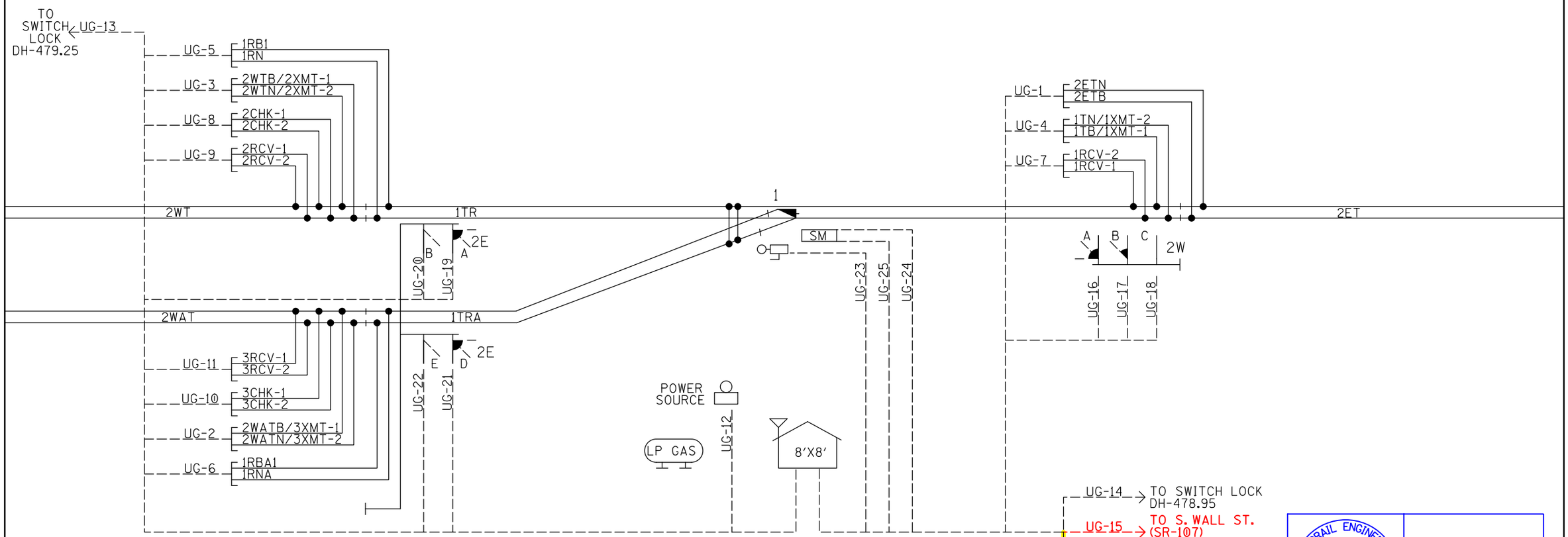

UG-1 - 2CUG #6 Tw.Tk.	UG-9 - 2CUG #6 Tw.Tk.	UG-18 - 5CUG #6
UG-2 - 2CUG #6 Tw.Tk.	UG-10 - 2CUG #6 Tw.Tk.	UG-19 - 5CUG #6
UG-3 - 2CUG #6 Tw.Tk.	UG-11 - 2CUG #6 Tw.Tk.	UG-20 - 5CUG #9
UG-4 - 2CUG #6 Tw.Tk.	UG-12 - 3CUG #6	UG-21 - 5CUG #9
UG-5 - 2CUG #6 Tw.Tk.	UG-13 - 5CUG #14	UG-22 - 5CUG #9
UG-6 - 2CUG #6 Tw.Tk.	UG-14 - 5CUG #14	UG-23 - 15CUG COMP. 3 #6 & 12 #14
UG-7 - 2CUG #6 Tw.Tk.	UG-15 - 5CUG #14	UG-24 - 3CUG #6
UG-8 - 2CUG #6 Tw.Tk.	UG-15 - 5CUG #14	UG-25 - 5CUG #14
	UG-16 - 5CUG #6	
	UG-17 - 5CUG #6	

INTERRAIL ENGINEERING 16086 INCORPORATED

RED = IN
YELLOW = OUT

DATE: 05-20-2016
NS PROJ.#04.0889
IRE/JWB/DBS

CABLE LAYOUT

DESIGNED BY: RAM 02-14-02	NORFOLK SOUTHERN
DRAWN BY: SWS 02-14-02	OFFICE OF ASS'T. VICE PRESIDENT COMM. & SIGNAL, ATLANTA, GA. — M.P.: DH479.00
CHECKED BY: RHW 02-28-02	MOSSER TO HANNIBAL GRIGGSVILLE
IN SERVICE: DLE 09-08-03	SPRINGFIELD DISTRICT — FILE No. R-1308
	CADD or DWG. No. SFDH47900.35 — SHEET No. 35 of 35

REVISION INITIALS

PROPERTY
NORFOLK SOUTHERN RAILWAY CO.