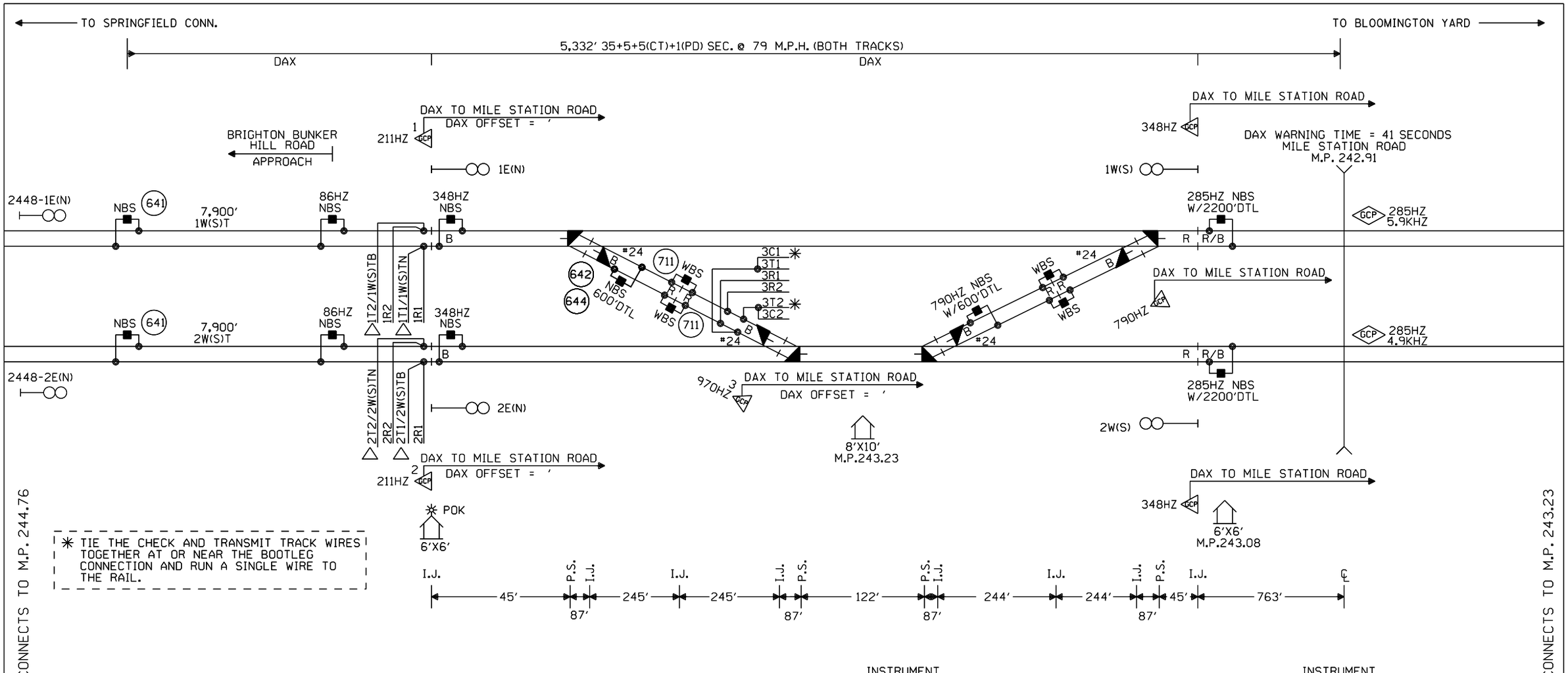

✳ TIE THE CHECK AND TRANSMIT TRACK WIRES TOGETHER AT OR NEAR THE BOOTLEG CONNECTION AND RUN A SINGLE WIRE TO THE RAIL.

NOTES:

⊗ = TWISTED WIRES
ALL TRACK WIRES 2C. #6
INSULATED 1 TWIST PER FT.

TRANSMITTER AND RECEIVER LEADS TO BE SEPARATED BY AT LEAST 12" IN TRENCH, LENGTHS SHOULD NOT EXCEED MANUFACTURES RECOMMENDATION.

ALL BUNGALOW WIRING TO BE #16 AWG FLEX UNLESS OTHERWISE SPECIFIED EXCEPT ALL GROUND WIRE TO BE #6 AWG FLEX OR LARGER.

REFER TO UP STANDARD DWG. FOR BUNGALOW GROUNDING.

PORTABLE GENERATOR EXTENSION CORD FOR 240V TO 240V IS PROVIDED AS WELL AS A 120V TO 240V ADAPTER.

△ = ENSURE TRACK POLARITY IS TRANSPOSED ACROSS ALL INSULATED JOINTS.

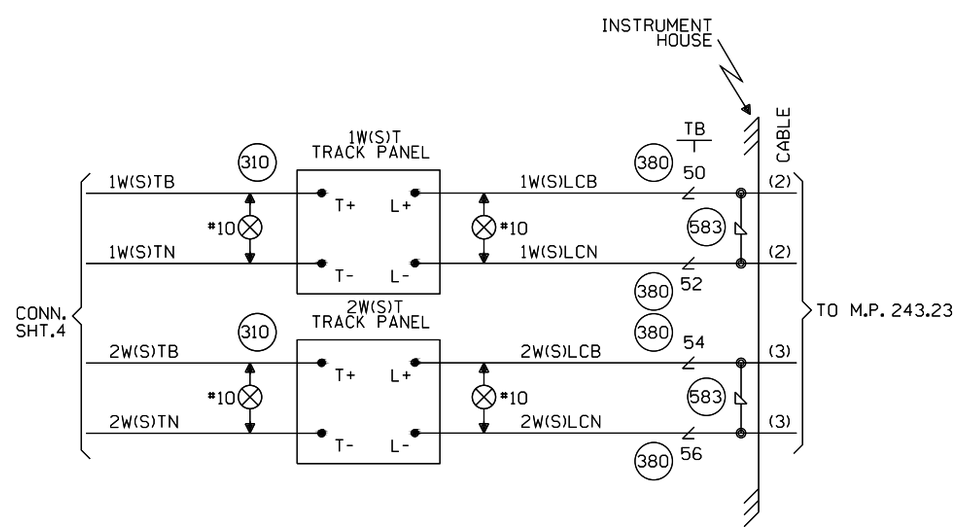

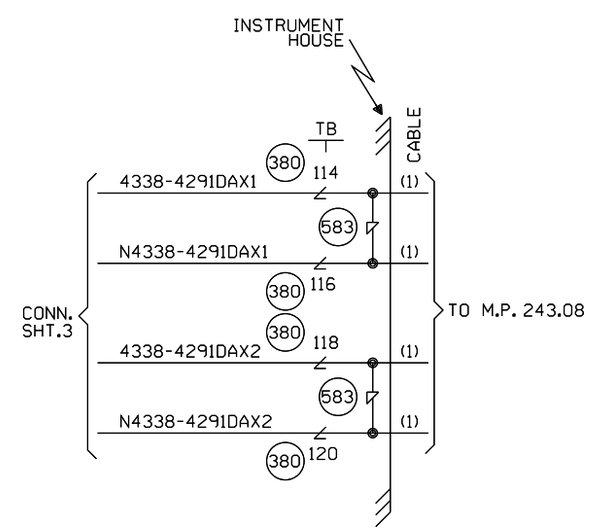

W(S) ◄——○——► E(N)

CABLE TABULATION

CABLE #1 7C#14 U.G.B.T. HOUSE TO MP. 242.91
CABLE #2 2C#6 U.G.B.T. HOUSE TO MP. 243.23
CABLE #3 2C#6 U.G.B.T. HOUSE TO MP. 243.23

NEW SHEET

Designed: 09/27/12
TIER IS PHASE 1 M.P. 239.70 TO M.P. 255.35 TO UPGRADE XING TO 4 QUAD WITH EGMS, VARIOUS C.P.'S
Rec#: WO#: 10804
IS: NBT / / / NST/MJF

MODIFICATION LEVEL	
O. A. LAST LEVEL CHECKED	DU
LAST LEVEL MOD THIS TYPICAL	DU
LAST LEVEL BY DESIGNER	DU
CHANGED FROM TYPICAL?	Y

rev 01.24.11 4K REMOTE.1

CIRCUIT MODIFICATIONS ARE NOT TO BE MADE WITHOUT AUTHORITY FROM THE OFFICE OF SIGNAL DESIGN

Date: 09/27/12
Des: NST
Chk: NBT
AFE: 10804

UNION PACIFIC RAILROAD
BRIGHTON, ILLINOIS
REMOTE LOCATION
SPRINGFIELD SUBDIVISION
Office of AVP Engineering - Signal Omaha, Nebraska

Sh.: 1
DOT 000000R
MP: 243.38
ID: CSL24338.1X

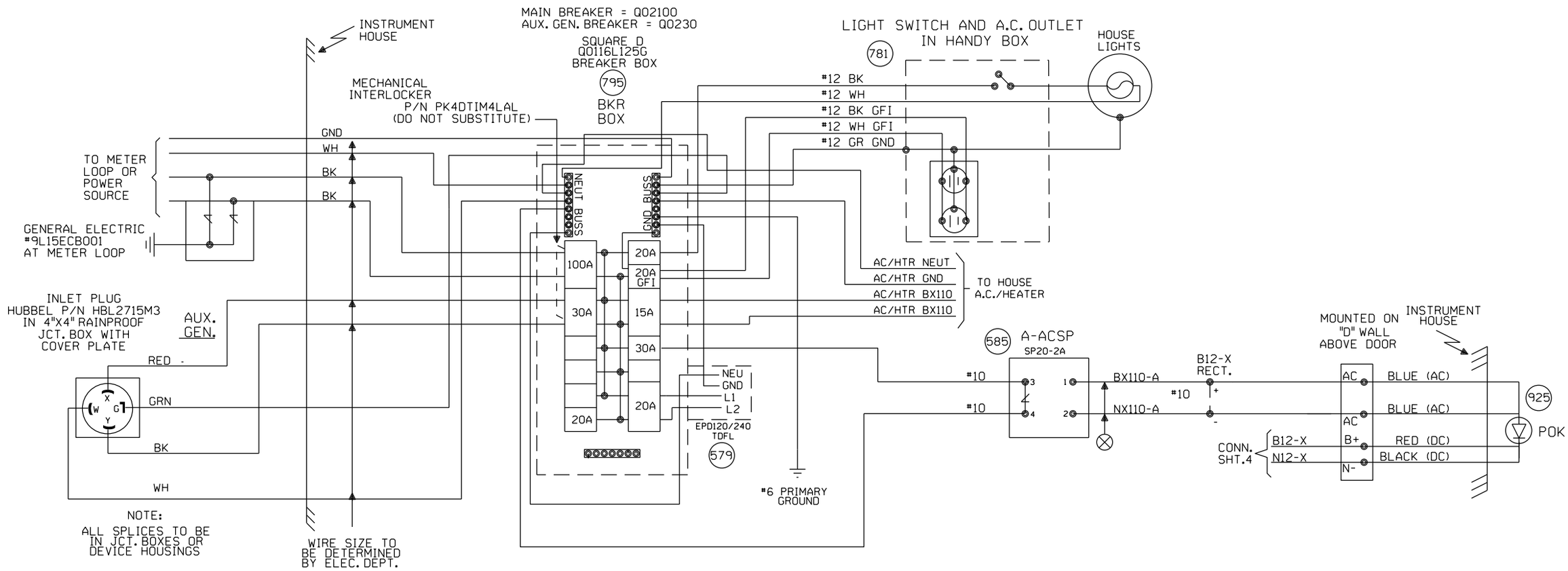

NEW SHEET

					Designed: 09/27/12 TIER IS PHASE 1 M.P. 239.70 TO M.P. 255.35 TO UPGRADE XING TO 4 QUAD WITH EGMS, VARIOUS C.P.'S Rec#: WO#: 10804 IS: NBT / / NST/MJF	MODIFICATION LEVEL		CIRCUIT MODIFICATIONS ARE NOT TO BE MADE WITHOUT AUTHORITY FROM THE OFFICE OF SIGNAL DESIGN	Date: 09/27/12 Des: NST Chk: NBT AFE: 10804	UNION PACIFIC RAILROAD BRIGHTON, ILLINOIS REMOTE LOCATION SPRINGFIELD SUBDIVISION Office of AVP Engineering - Signal Omaha, Nebraska	Sh.: 2 DOT 000000R MP: 243.38 ID: CSL24338.2X
						Q. A. LAST LEVEL CHECKED	DU				
						LAST LEVEL MOD THIS TYPICAL	DU				
						LAST LEVEL BY DESIGNER	DU				
						CHANGED FROM TYPICAL? REV 01.24.11 4K SEARAC.2	Y				

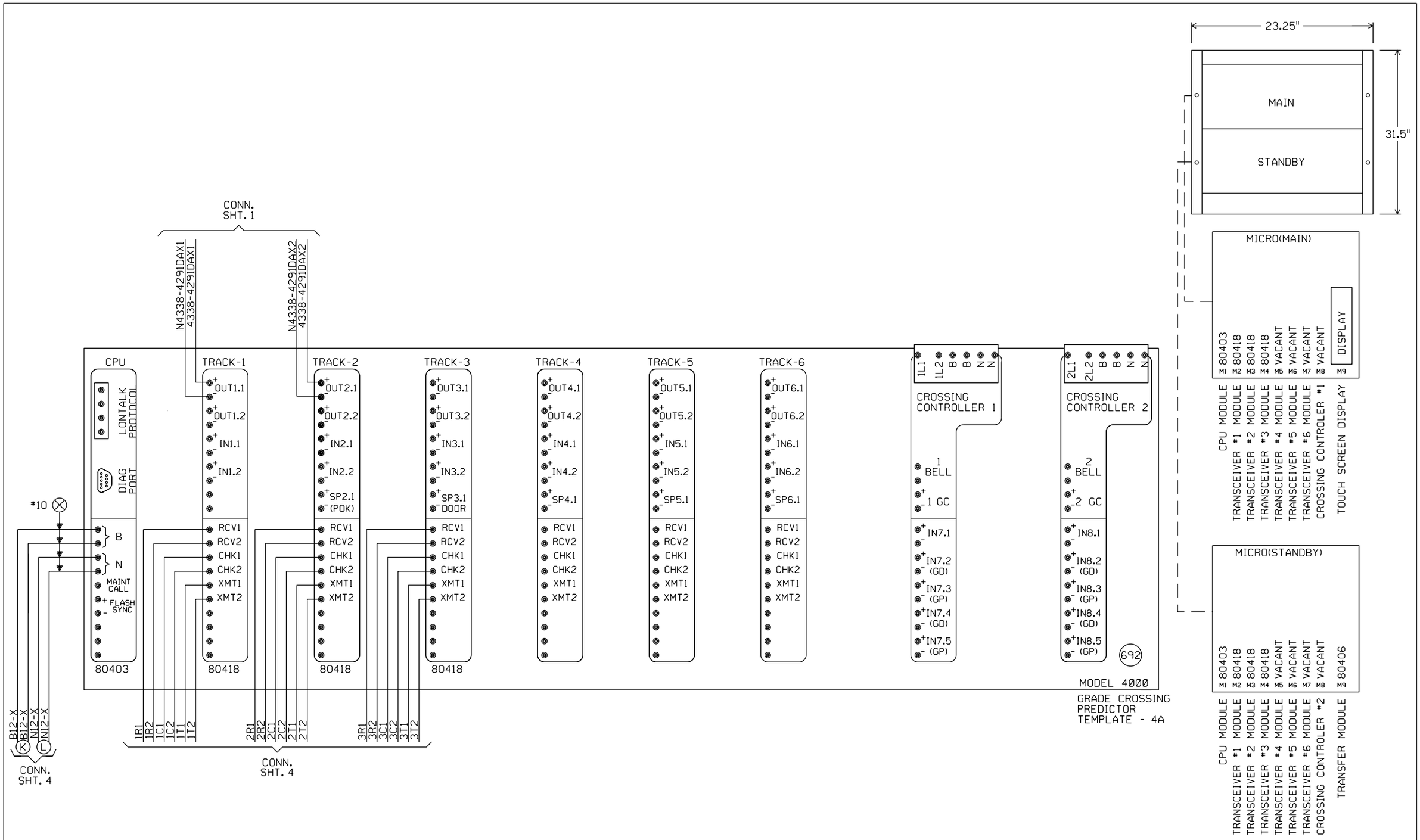

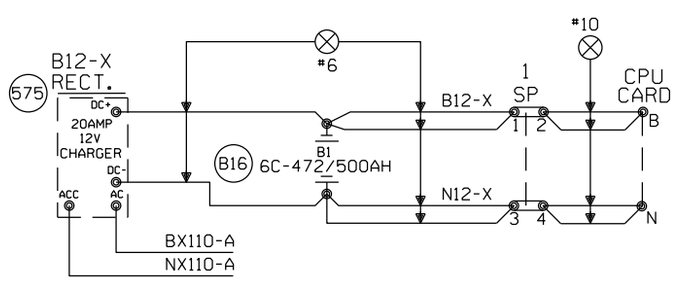

"Mf" FREQUENCY (HZ)	MAXIMUM TRANSMIT WIRE LENGTH (FEET)
86	100
114	125
156	150
211	200
285-970	250

NOTE:
EACH TRANSMITTER TO RAIL WIRE FROM XMT1 AND XMT2 MUST NOT EXCEED THE MAXIMUM LENGTH SPECIFIED IN THE TABLE SHOWN. THE RECEIVER WIRE LENGTH IS NOT CRITICAL. DOES NOT APPLY TO 6 TRACK WIRE APPLICATION.

NEW SHEET

Designed: 09/27/12
TIER IS PHASE 1 M.P. 239.70 TO M.P. 255.35 TO UPGRADE XING TO 4 QUAD WITH EGMS, VARIOUS C.P.'S
Rec#: WO#: 10804
IS: NBT/ /NST/MJF

MODIFICATION LEVEL	
Q. A. LAST LEVEL CHECKED	DU
LAST LEVEL MOD THIS TYPICAL	DU
LAST LEVEL BY DESIGNER	DU
CHANGED FROM TYPICAL?	Y

REV 01.24.11 4K 4TKB4GF.3

CIRCUIT MODIFICATIONS ARE NOT TO BE MADE WITHOUT AUTHORITY FROM THE OFFICE OF SIGNAL DESIGN

Date: 09/27/12
Des: NST
Chk: NBT
AFE: 10804

UNION PACIFIC RAILROAD

BRIGHTON, ILLINOIS
REMOTE LOCATION
SPRINGFIELD SUBDIVISION

Office of AVP Engineering - Signal Omaha, Nebraska

Sh.: 3
DOT 000000R
MP: 243.38
ID: CSL24338.3X

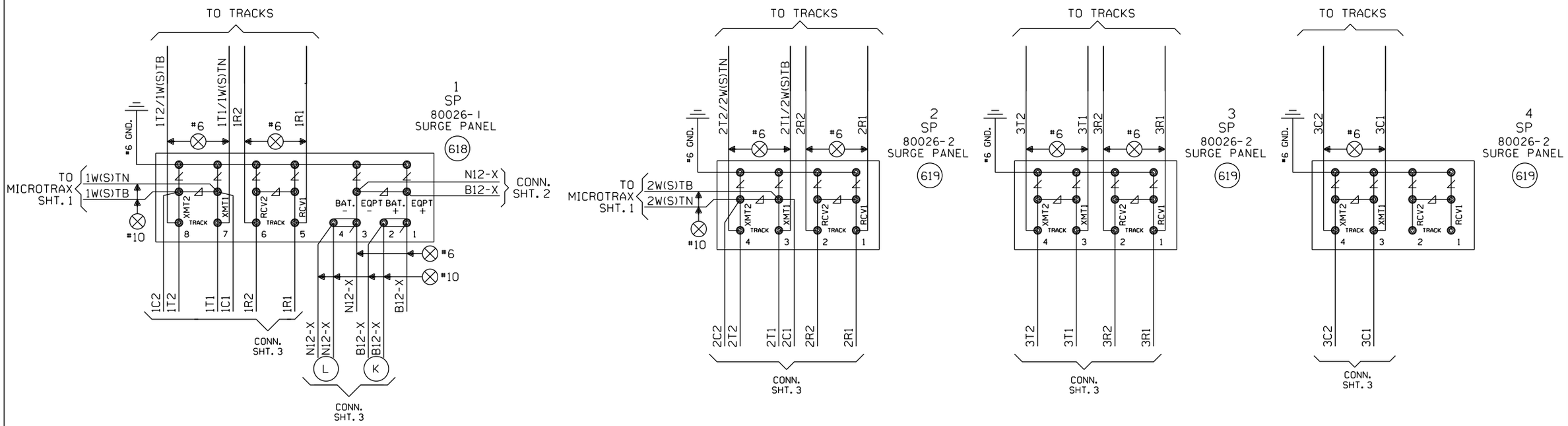

NEW SHEET

					Designed: 09/27/12 TIER IS PHASE 1 M.P. 239.70 TO M.P. 255.35 TO UPGRADE XING TO 4 QUAD WITH EGMS, VARIOUS C.P.'S Rec#: WO#: 10804 IS: NBT / / NST/MJF	MODIFICATION LEVEL		CIRCUIT MODIFICATIONS ARE NOT TO BE MADE WITHOUT AUTHORITY FROM THE OFFICE OF SIGNAL DESIGN	Date: 09/27/12 Des: NST Chk: NBT AFE: 10804	UNION PACIFIC RAILROAD BRIGHTON, ILLINOIS REMOTE LOCATION SPRINGFIELD SUBDIVISION Office of AVP Engineering - Signal Omaha, Nebraska	Sh.: 4 DOT 000000R MP: 243.38 ID: CSL24338.4X
						Q.A. LAST LEVEL CHECKED	DU				
						LAST LEVEL MOD THIS TYPICAL	DU				
						LAST LEVEL BY DESIGNER	DU				
						CHANGED FROM TYPICAL? REV 01.24.11 4K REMOTE.4	Y				

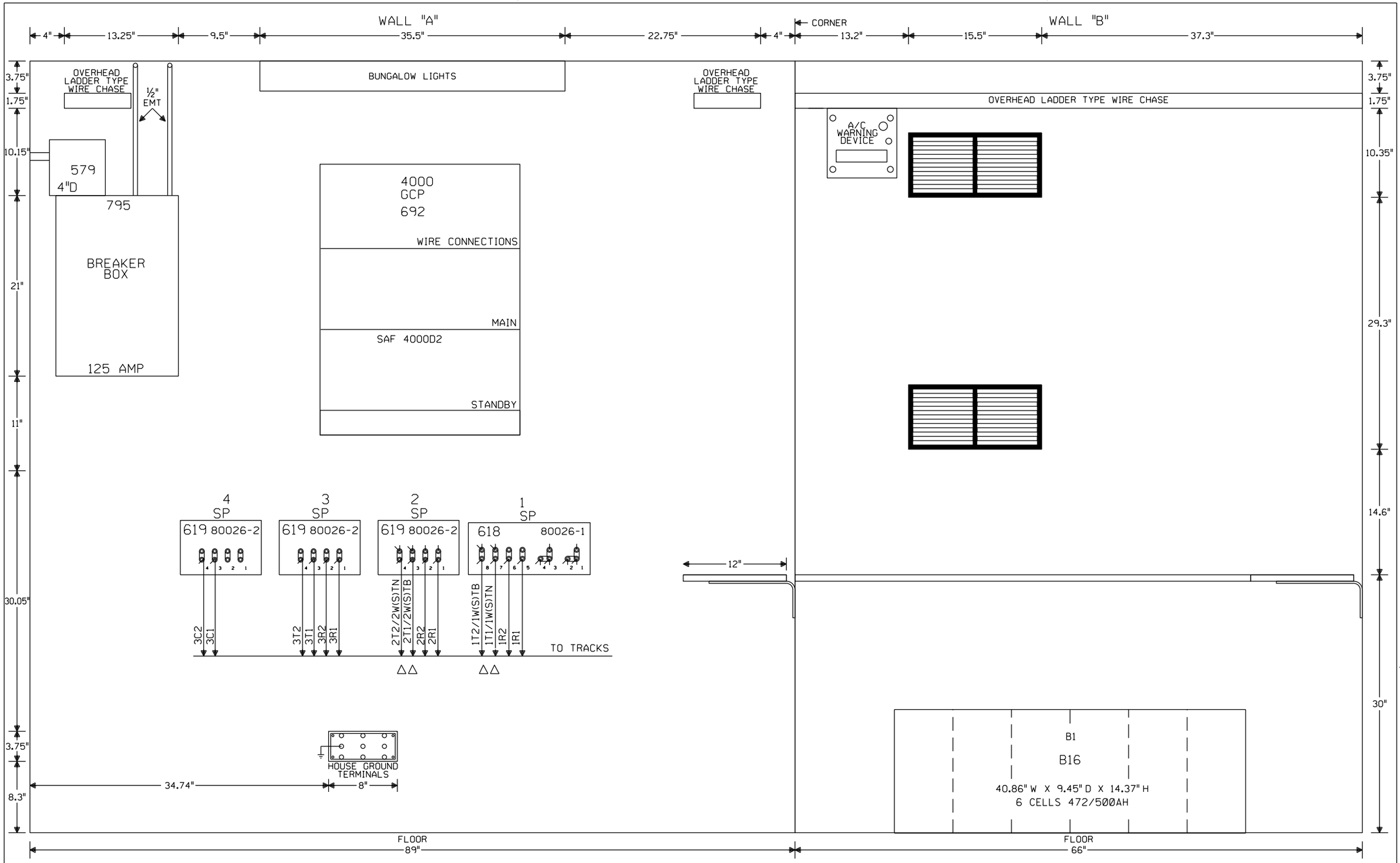

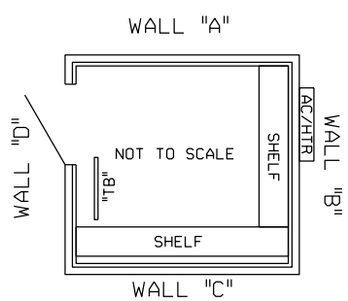

△ = FIELD VERIFY POLARITY

NOTE: ALL DIMENSIONS SHOWN ARE APPROXIMATE.

NEW SHEET

Designed: 09/27/12

TIER 1S PHASE 1 M.P. 239.70 TO M.P. 255.35 TO UPGRADE XING TO 4 QUAD WITH EGMS, VARIOUS C.P.'S

Rec*: WO*: 10804
1S: NBT/
/ /NST/MJF

CIRCUIT MODIFICATIONS ARE NOT TO BE MADE WITHOUT AUTHORITY FROM THE OFFICE OF SIGNAL DESIGN

Date:	09/27/12
Des:	NST
Chk:	NBT
AFE:	10804

UNION PACIFIC RAILROAD

BRIGHTON, ILLINOIS
REMOTE LOCATION
SPRINGFIELD SUBDIVISION

Office of AVP Engineering - Signal — Omaha, Nebraska

Sh.:	5
DOT	000000R
MP:	243.38
ID:	CSL24338.5X

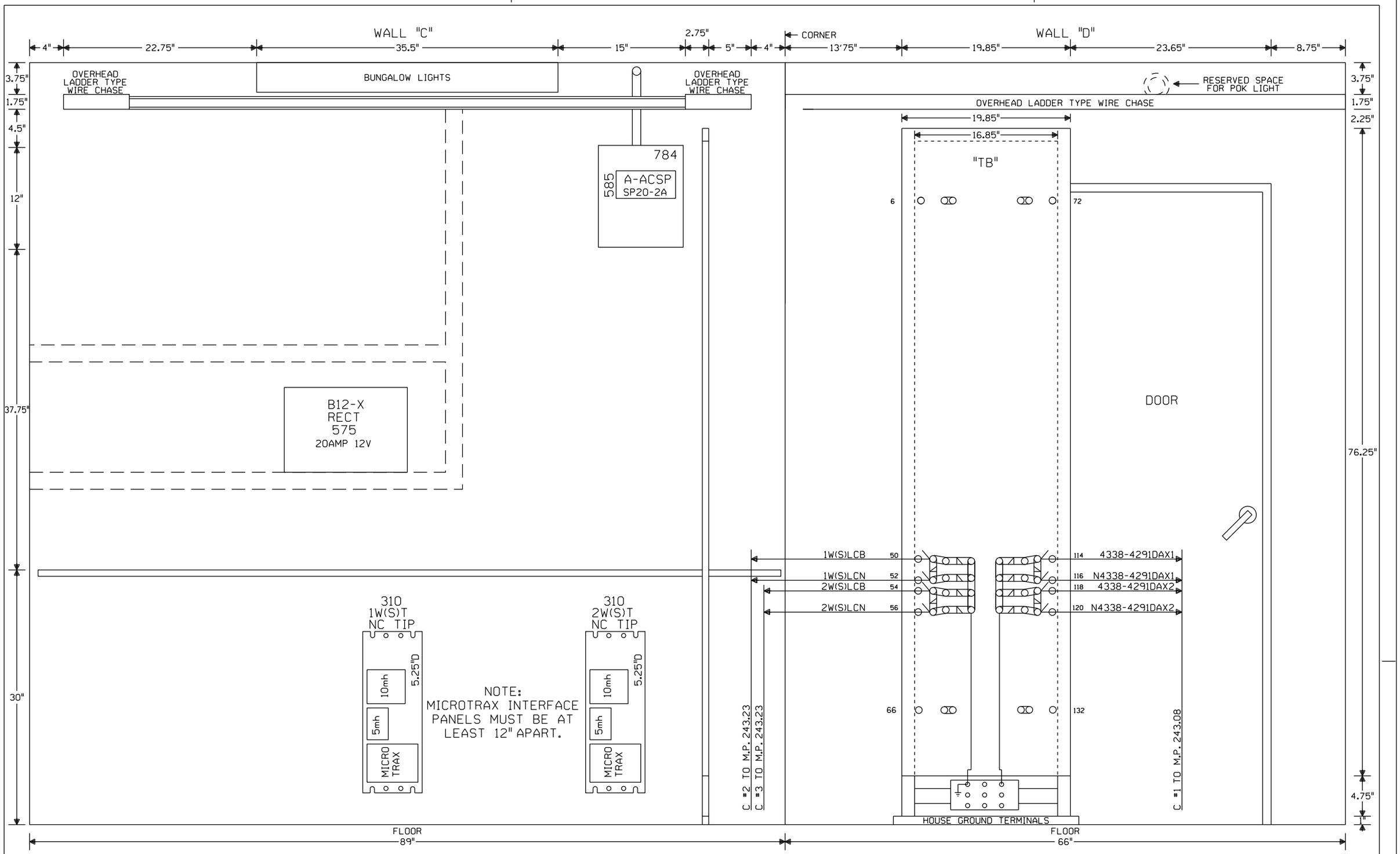

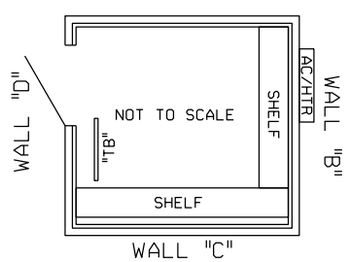

NOTE: ALL DIMENSIONS SHOWN
ARE APPROXIMATE.

NEW SHEET

Designed: 09/27/12
TIER IS PHASE 1
M.P. 239.70 TO M.P.
255.35 TO UPGRADE
XING TO 4 QUAD WITH
EGMS, VARIOUS C.P.'S
Rec*: WO*: 10804
IS: NBT/
/ /NST/MJF

CIRCUIT MODIFICATIONS ARE NOT TO BE MADE WITHOUT AUTHORITY FROM THE OFFICE OF SIGNAL DESIGN

Date:	09/27/12
Des:	NST
Chk:	NBT
AFE:	10804

UNION PACIFIC RAILROAD

BRIGHTON, ILLINOIS
REMOTE LOCATION
SPRINGFIELD SUBDIVISION

Office of AVP Engineering - Signal — Omaha, Nebraska

Sh.:	6
DOT	000000R
MP:	243.38
ID:	CSL24338.6X

Minimum Program Steps Report

Location and SIN

DOT Number: 000000R
Milepost Number: 243.38
Site Name: BRIGHTON, IL

SIN: 762010010016 *

* Parameter is part of office check number calculation.

MCF and Template Selection

MCF Name: GCP-T6X-02-6.mcf
MCF Revision: 26
MCFCRC: 494D2656

Template = 4A:6 Remotes (OCCN) *

* Parameter is part of office check number calculation.

Minimum Program Steps

MS4000 configuration
Track 1 : GCP Frequency = 211 Hz (OCCN,TCN) (Hidden) *

BASIC: module configuration
Track 2/RIO 1 Slot = Track (OCCN) *
Track 3/PSO 2 Slot = Track (OCCN) *

GCP: track 1
Track 1 : GCP Frequency = 211 Hz (OCCN,TCN) *
Track 1 : Approach Distance = 3097 ft (OCCN,TCN) *

GCP: track 1 Dax A
Track 1 : Dax A Warning Time = 41 sec (OCCN) *
Track 1 : Dax A Offset Distance = 2235 ft (OCCN) *

GCP: track 2
Track 2 : GCP Frequency = 211 Hz (OCCN,TCN) *
Track 2 : Approach Distance = 3097 ft (OCCN,TCN) *

GCP: track 2 Dax A
Track 2 : Dax A Warning Time = 41 sec (OCCN) *
Track 2 : Dax A Offset Distance = 2235 ft (OCCN) *

GCP: track 3
Track 3 : GCP Frequency = 970 Hz (OCCN,TCN) *
Track 3 : Approach Distance = 490 ft (OCCN,TCN) *

GCP: track 3 Dax A

Track 3 : Dax A Warning Time = 41 sec (OCCN) *
Track 3 : Dax A Offset Distance = 1613 ft (OCCN) *

AND: AND 1 XR
AND 1 XR Track 1 = Not Used (OCCN) *

OUTPUT: assignment page 1
OUT 1.1 = T1 Dax A (OCCN) *
OUT 2.1 = AND 1 XR (OCCN) *

Express: MS4000 configuration
Track 1 : GCP Frequency = 211 Hz (OCCN,TCN) (Hidden) *

* Parameter is part of office check number calculation.

Check Numbers

Office Check Number: 41BE142D
Config. Check Number: 382306E5
(Based on MCF Revision 26)

Parameters not part of office check number calculation:

Comments

<none>

Configuration Package File

Filename: CSL24338_000000R.pac
Path: H:\UP\Springfield Sub Tier 1 Ph. 1 11-419-1\PAC Files\MP 243.38\
Date/Time: 5/14/2015 16:03:56
DT Version: 5.7.3