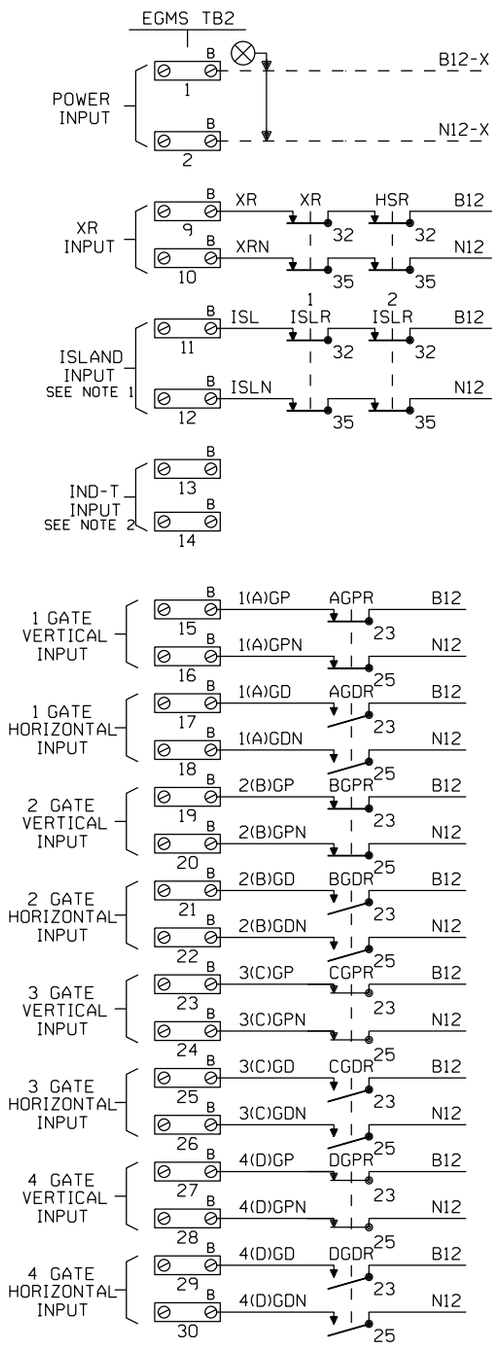

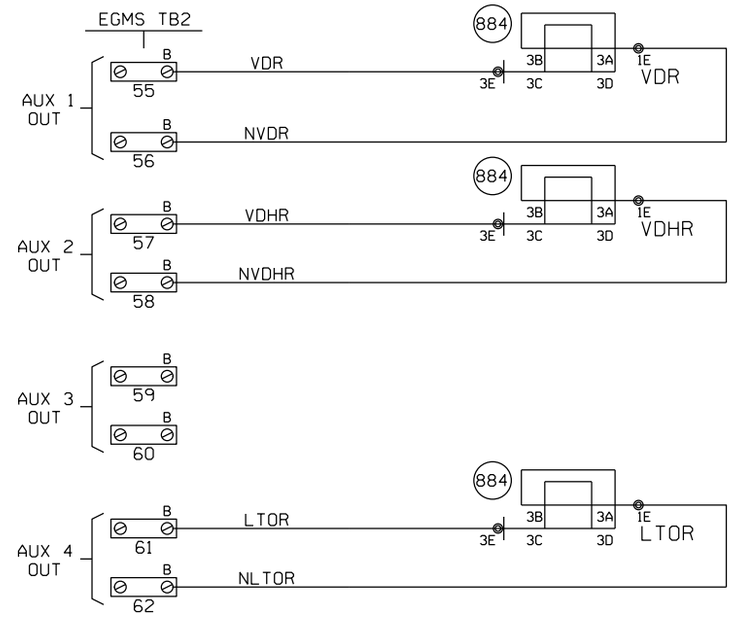

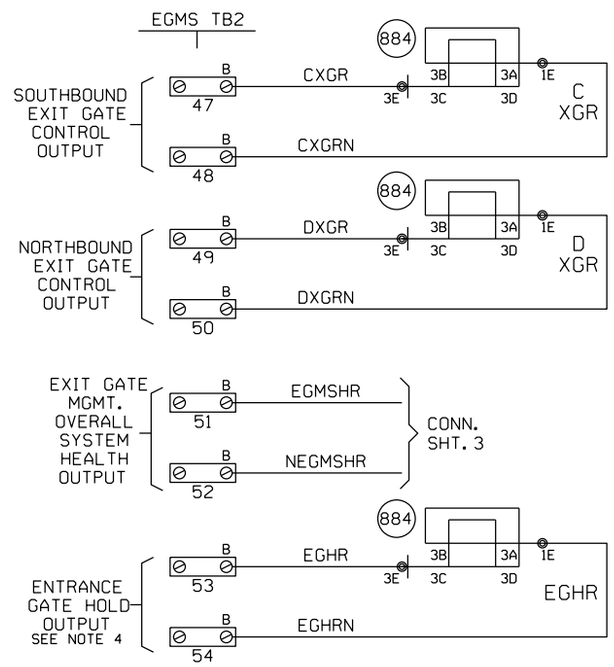

NOTES

1. EGMS ISL1 INPUT: "AND" ISLAND INPUTS FROM ALL TRACKS. NOTE THAT WHEN THIS INPUT IS DE-ENERGIZED THE XR INPUT ON TB2, 9 & 10 MUST ALSO BE DE-ENERGIZED BEFORE THE EXIT GATES MAY BE DRIVEN DOWN.
2. EGMS ISL2 INPUT: MAY BE USED FOR STAND ALONE ISLAND INPUT. THIS INPUT IS NOT DEPENDENT UPON THE STATUS OF XR INPUT ON TB2, 9 & 10. THIS INPUT MUST BE FIELD SELECTED AND ENABLED DURING EGMS SETUP.
3. ALL WIRING TO EGMS TO BE #16 AWG FLEX.
4. ENTRANCE GATE HOLD (EGH) CAN BE PROGRAMMED AS A NORMALLY ENERGIZED OR NORMALLY DE-ENERGIZED OUTPUT.

NEW SHEET

Designed: 09/27/12
TIER IS PHASE 1 M.P. 239.70 TO M.P. 255.35 TO UPGRADE XING TO 4 QUAD WITH EGMS, VARIOUS C.P.'S
Rec*: WO*: 10804
IS: NBT / / / NST/MJF

MODIFICATION LEVEL	
O. A. LAST LEVEL CHECKED	DU
LAST LEVEL MOD THIS TYPICAL	DU
LAST LEVEL BY DESIGNER	DU
CHANGED FROM TYPICAL?	Y

Rev 01.24.11 4K 2TKEGMS.8A

CIRCUIT MODIFICATIONS ARE NOT TO BE MADE WITHOUT AUTHORITY FROM THE OFFICE OF SIGNAL DESIGN

Date: 09/27/12
Des: NST
Chk: NBT
AFE: 10804

UNION PACIFIC RAILROAD
SHIPMAN, ILLINOIS
BACHMAN ROAD
SPRINGFIELD SUBDIVISION
Office of AVP Engineering - Signal Omaha, Nebraska

Sh.: 8A
DOT 294411S
MP: 241.28
ID: CSL24128.8AX

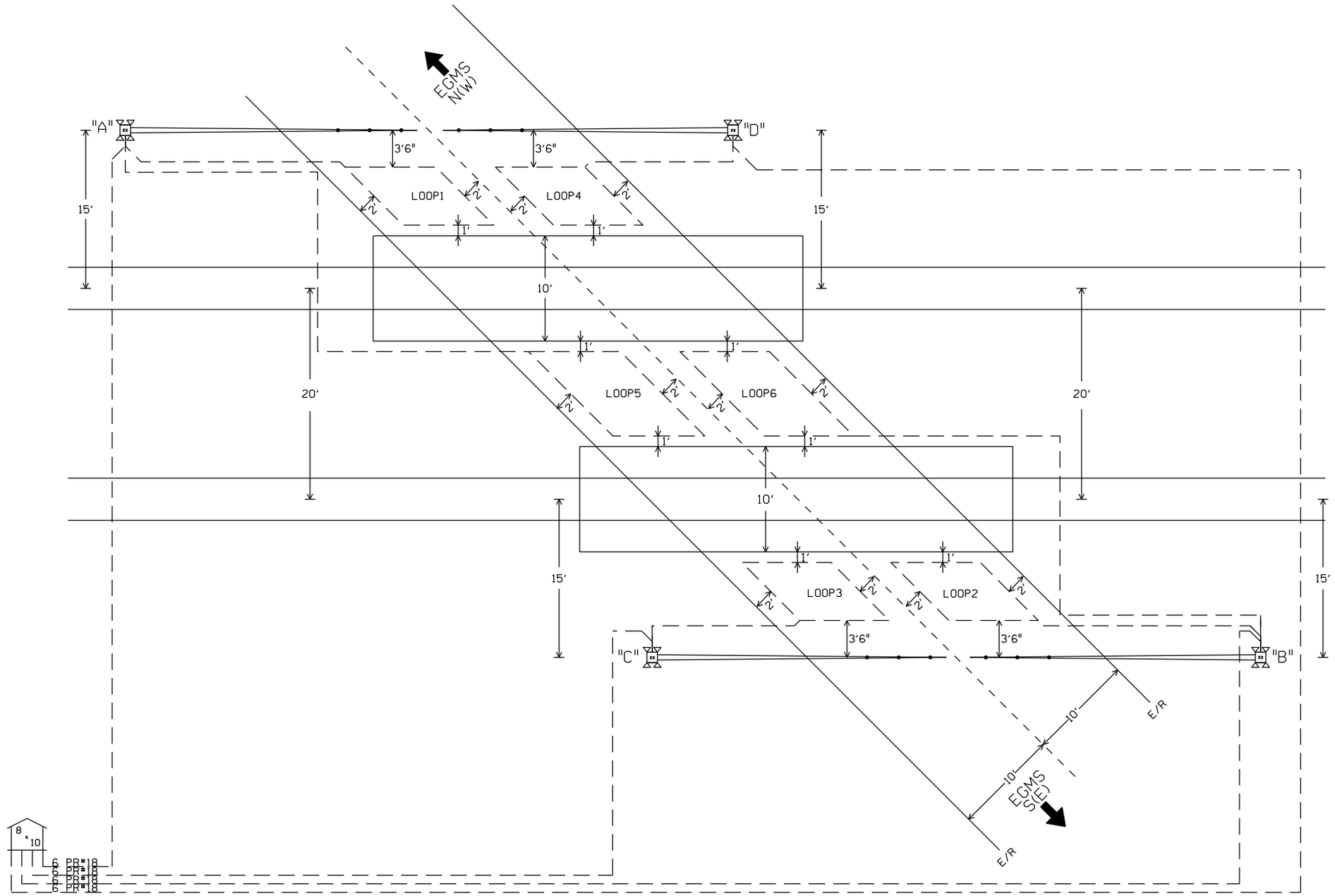

LOOP PARAMETERS

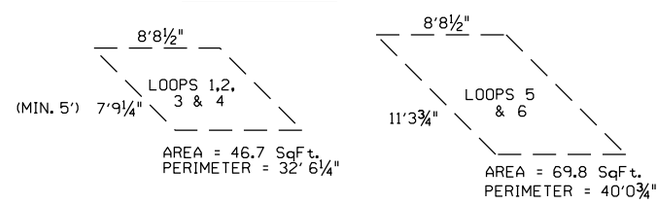

NOTES:

1. DIMENSIONS ON THIS PAGE ARE SHOWN TO PROVIDE GUIDANCE FOR CONSTRUCTION CREWS AND FUTURE MAINTENANCE REPAIRS.
2. REFER TO SAFETRAN EGMS STANDARDS AND RECOMENDED PRACTICES FOR LOOP LAYOUT DESIGN DETAILS.
3. SAFETRAN EGMS JUNCTION BOX INSTALLED ON TOP OF EACH FOUNDATION.
4. INSTALL SAFETRAN 6 PAIR #18 CABLE FROM JUNCTION BOX TO BUNGALOW.
5. E/R = EDGE OF ROAD

℄ +

LOOP PLACEMENT SKETCH

NOT TO SCALE

LOOP SIZES

LOOP #	LOOP PERIMETER	LOOP LEAD-IN	PART #
1	33'	25'	PLC-33-25
2	33'	25'	PLC-33-25
3	33'	25'	PLC-33-25
4	33'	25'	PLC-33-25
5	41'	75'	PLC-41-75
6	41'	75'	PLC-41-75

NEW SHEET

Designed: 09/27/12

TIER IS PHASE 1 M.P. 239.70 TO M.P. 255.35 TO UPGRADE XING TO 4 QUAD WITH EGMS. VARIOUS C.P.'S

Rec'd: WO#: 10804
IS: NBT / / NST/MJF

MODIFICATION LEVEL	
O. A. LAST LEVEL CHECKED	DU
LAST LEVEL MOD THIS TYPICAL	DU
LAST LEVEL BY DESIGNER	DU
CHANGED FROM TYPICAL?	Y

REV 01.24.11 4K 2TKEGMS.8B

CIRCUIT MODIFICATIONS ARE NOT TO BE MADE WITHOUT AUTHORITY FROM THE OFFICE OF SIGNAL DESIGN

Date: 09/27/12
Des: NST
Chk: NBT
AFE: 10804

UNION PACIFIC RAILROAD

SHIPMAN, ILLINOIS
BACHMAN ROAD
SPRINGFIELD SUBDIVISION

Office of Sr AVP Engineering - Signal/TCO Omaha, Nebraska

Sh.: 8B
DOT 294411S
MP: 241.28
ID: CSL24128.8BX

(1) E-1400 SETUP PARAMETERS

FUNCTION	CH. 1	CH. 2	CH. 3	CH. 4
FREQUENCY SETTING	2	4	6	8
SENSITIVIY SETTING	6*	6*	6*	6*
OPTION 1 (TEMP L DISPLAY)	OFF			
OPTION 2 (TEMP ΔL/L DISPLAY)	OFF			
OPTION 3 (NOISE FILTER)	3.00	3.00	3.00	3.00
OPTION 4 (TRACKING)	4.02	4.02	4.02	4.02
OPTION 5 (SENSITIVITY BOOST)	5.00	5.00	5.00	5.00
OPTION 6 (TEMP AUDIBLE SIGNAL)	OFF	OFF	OFF	OFF
CHECKLOOP INTERVAL	005	005	005	005
DETECTOR ID	000			
OPTION 7 (DETECTOR SYNC)	7.01			
OPTION 8 (ISL OPTION)	OFF			
OPTION 9 (SHUNT ENHANCEMENT SE)	OFF	OFF	OFF	OFF
MAIN VITAL OUTPUT DELAY	00.0	00.0	00.0	00.0
MAIN VITAL OUTPUT EXTENSION	00.0	00.0	00.0	00.0
MAIN VITAL OUTPUT MAPPING	10	20	40	80
AUX VITAL OUTPUT MAPPING	001	002	004	008
LOOP FREQUENCY (Khz)				
LOOP INDUCTANCE (MICRO HENRIES)				

SOFTWARE VERSION 4.02
* FIELD VERIFY

(2) E-1400 SETUP PARAMETERS

FUNCTION	CH. 1	CH. 2	CH. 3	CH. 4
FREQUENCY SETTING	2	4	6	8
SENSITIVIY SETTING	6*	6*	OFF*	OFF*
OPTION 1 (TEMP L DISPLAY)	OFF			
OPTION 2 (TEMP ΔL/L DISPLAY)	OFF			
OPTION 3 (NOISE FILTER)	3.00	3.00	3.00	3.00
OPTION 4 (TRACKING)	4.02	4.02	4.02	4.02
OPTION 5 (SENSITIVITY BOOST)	5.00	5.00	5.00	5.00
OPTION 6 (TEMP AUDIBLE SIGNAL)	OFF	OFF	OFF	OFF
CHECKLOOP INTERVAL	005	005	005	005
DETECTOR ID	001			
OPTION 7 (DETECTOR SYNC)	7.01			
OPTION 8 (ISL OPTION)	OFF			
OPTION 9 (SHUNT ENHANCEMENT SE)	OFF	OFF	OFF	OFF
MAIN VITAL OUTPUT DELAY	00.0	00.0	00.0	00.0
MAIN VITAL OUTPUT EXTENSION	00.0	00.0	00.0	00.0
MAIN VITAL OUTPUT MAPPING	10	20	40	80
AUX VITAL OUTPUT MAPPING	001	002	004	008
LOOP FREQUENCY (Khz)				
LOOP INDUCTANCE (MICRO HENRIES)				

SOFTWARE VERSION 4.02
* FIELD VERIFY

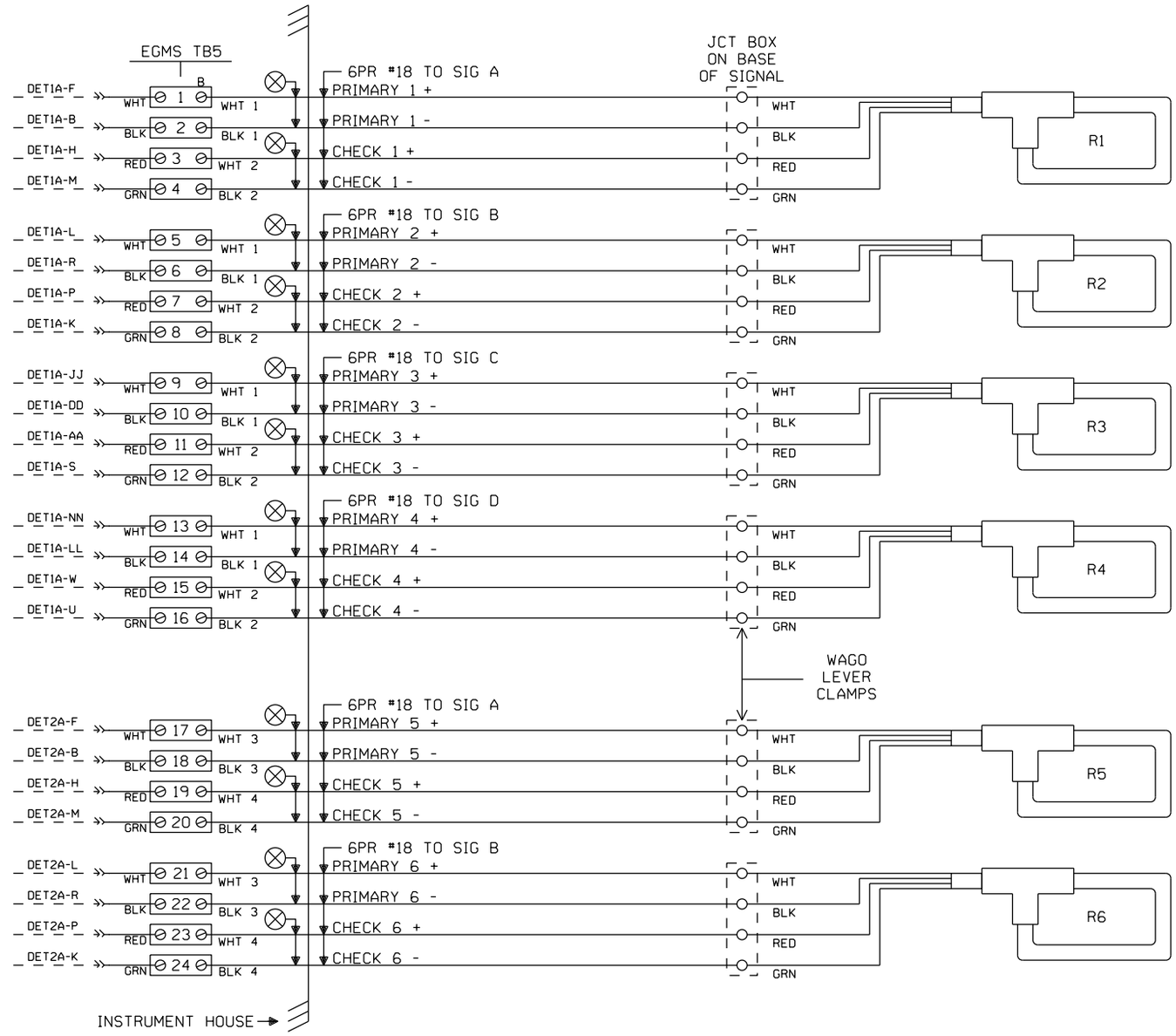

CABLE TABULATION

CABLE NO. (13) 6/PR #18 U.G.C. TO JCT BOX ON BASE OF GATE "A" (RCL PART #03-094-005)
CABLE NO. (14) 6/PR #18 U.G.C. TO JCT BOX ON BASE OF GATE "B" (RCL PART #03-094-005)
CABLE NO. (15) 6/PR #18 U.G.C. TO JCT BOX ON BASE OF GATE "C" (RCL PART #03-094-005)
CABLE NO. (16) 6/PR #18 U.G.C. TO JCT BOX ON BASE OF GATE "D" (RCL PART #03-094-005)

NEW SHEET

Designed: 09/27/12
TIER IS PHASE 1 M.P. 239.70 TO M.P. 255.35 TO UPGRADE XING TO 4 QUAD WITH EGMS, VARIOUS C.P.'S
Rec*: WO*: 10804
IS: NBT / / /NST/MJF

MODIFICATION LEVEL	
O.A. LAST LEVEL CHECKED	DU
LAST LEVEL MOD THIS TYPICAL	DU
LAST LEVEL BY DESIGNER	DU
CHANGED FROM TYPICAL?	Y

rev 01.24.11 4K 2TKEGMS.9

CIRCUIT MODIFICATIONS ARE NOT TO BE MADE WITHOUT AUTHORITY FROM THE OFFICE OF SIGNAL DESIGN

Date: 09/27/12
Des: NST
Chk: NBT
AFE: 10804

UNION PACIFIC RAILROAD
SHIPMAN, ILLINOIS
BACHMAN ROAD
SPRINGFIELD SUBDIVISION
Office of AVP Engineering - Signal Omaha, Nebraska

Sh.: 9
DOT 294411S
MP: 241.28
ID: CSL24128.9X

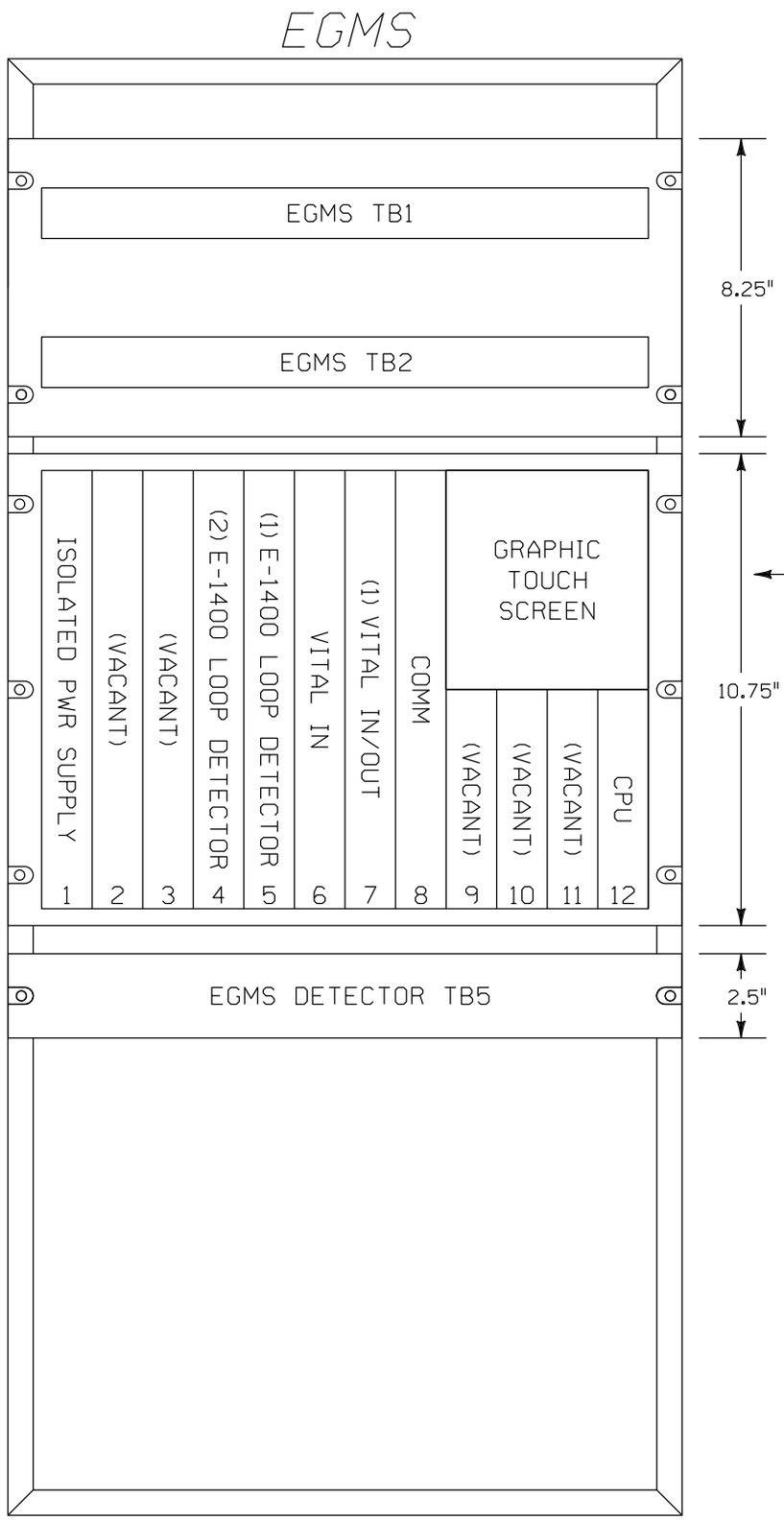

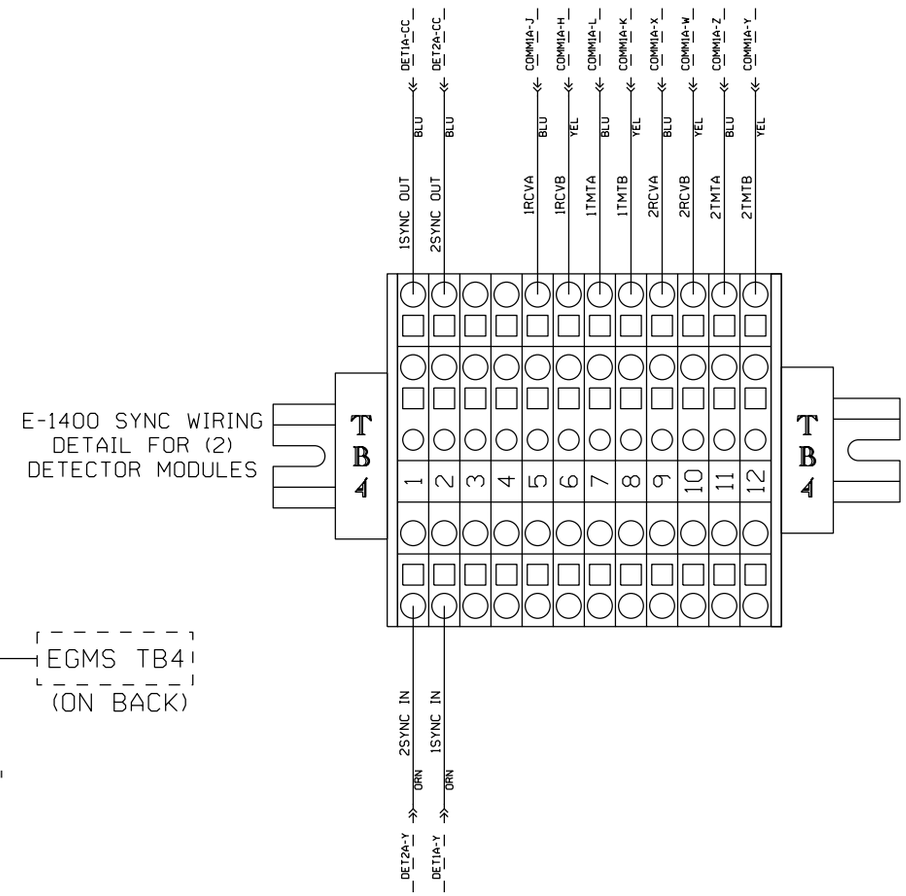

NEW SHEET

					Designed: 09/27/12 TIER IS PHASE 1 M.P. 239.70 TO M.P. 255.35 TO UPGRADE XING TO 4 QUAD WITH EGMS, VARIOUS C.P.'S Rec*: WO*: 10804 IS: NBT / / /NST/MJF	MODIFICATION LEVEL		CIRCUIT MODIFICATIONS ARE NOT TO BE MADE WITHOUT AUTHORITY FROM THE OFFICE OF SIGNAL DESIGN	Date: 09/27/12	UNION PACIFIC RAILROAD	Sh.: 9A
						O.A. LAST LEVEL CHECKED	DU		Des: NST	SHIPMAN, ILLINOIS BACHMAN ROAD SPRINGFIELD SUBDIVISION	DOT 294411S
						LAST LEVEL MOD THIS TYPICAL	DU		Chk: NBT		MP: 241.28
						LAST LEVEL BY DESIGNER	DU		AFE: 10804		ID: CSL24128.9AX
						CHANGED FROM TYPICAL?	Y				
						REV 01.24.11 4K 2TKEGMS.9B				Office of AVP Engineering - Signal Omaha, Nebraska	

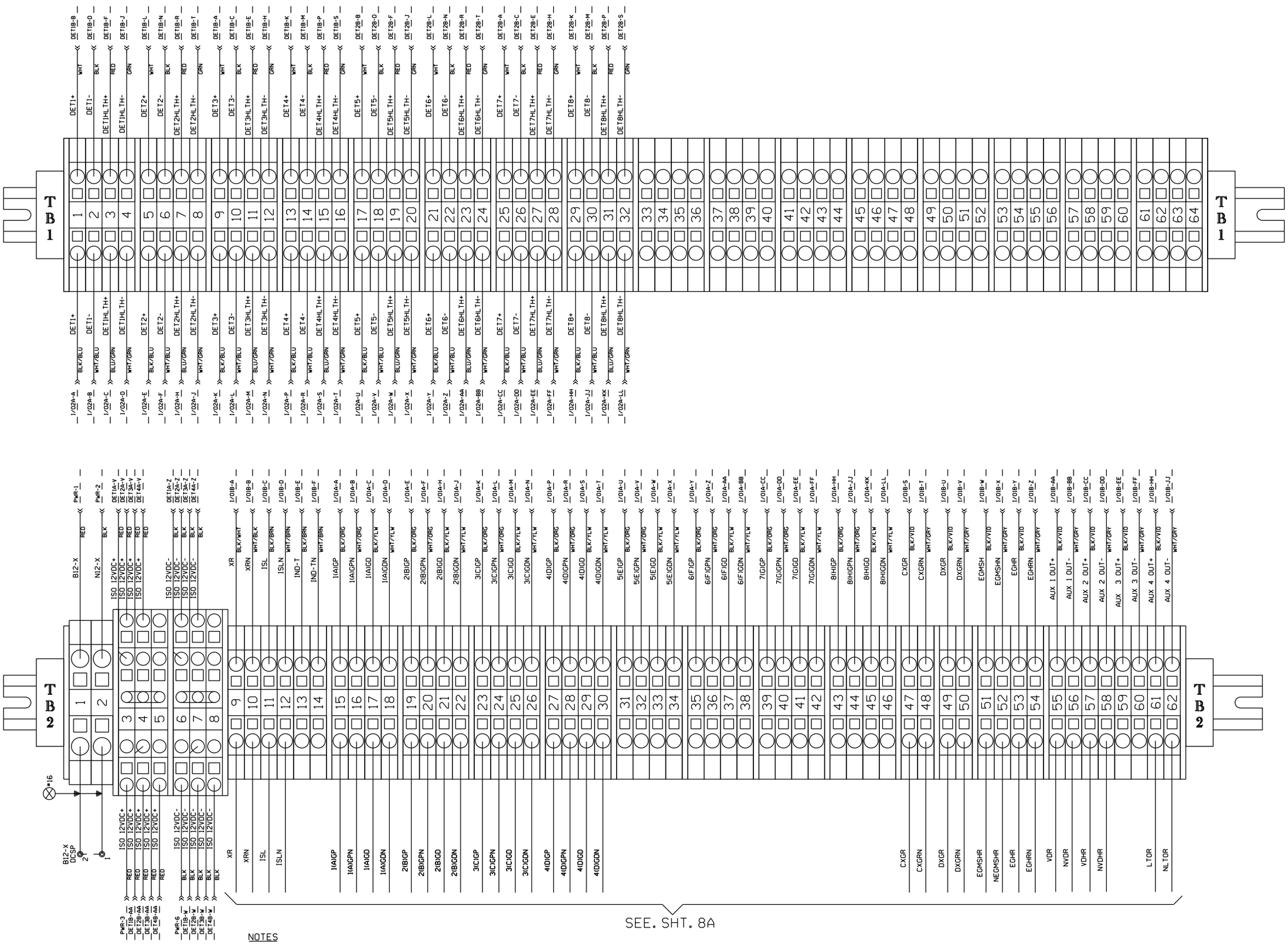

NOTES

1. TB1 PROVIDES AN EXTERNAL PASS THROUGH BETWEEN THE E-1400 MODULES AND THE VITAL INPUT MODULE IN CHASSIS POSITION 6. EGMS OR EGMS+ UNITS CONFIGURED FOR LESS THAN 4 EACH E-1400 MODULES WILL ONLY BE WIRED AS REQUIRED.
2. TB2-3 THROUGH TB2-8 PROVIDE A CONNECTION BUS FOR INTERNAL SUPPLY VOLTAGES AND MUST NOT BE USED TO SUPPLY OTHER CIRCUITS.

NEW SHEET

Designed: 09/27/12

TIER IS PHASE 1 M.P. 239.70 TO M.P. 255.35 TO UPGRADE XING TO 4 QUAD WITH EGMS, VARIOUS C.P.'S

Rec#: WO#.10804
IS: NBT / / / NST/MJF

MODIFICATION LEVEL	
D. A. LAST LEVEL CHECKED	DU
LAST LEVEL MOD THIS TYPICAL	DU
LAST LEVEL BY DESIGNER	DU
CHANGED FROM TYPICAL?	Y

REV 01.24.11 4K 2TKEGMS.9C

CIRCUIT MODIFICATIONS ARE NOT TO BE MADE WITHOUT AUTHORITY FROM THE OFFICE OF SIGNAL DESIGN

Date: 09/27/12
Des: NST
Chk: NBT
AFE: 10804

UNION PACIFIC RAILROAD
SHIPMAN, ILLINOIS
BACHMAN ROAD
SPRINGFIELD SUBDIVISION
Office of AVP Engineering - Signal Omaha, Nebraska

Sh.: 9B
DOT 294411S
MP: 241.28
ID: CSL24128.9BX

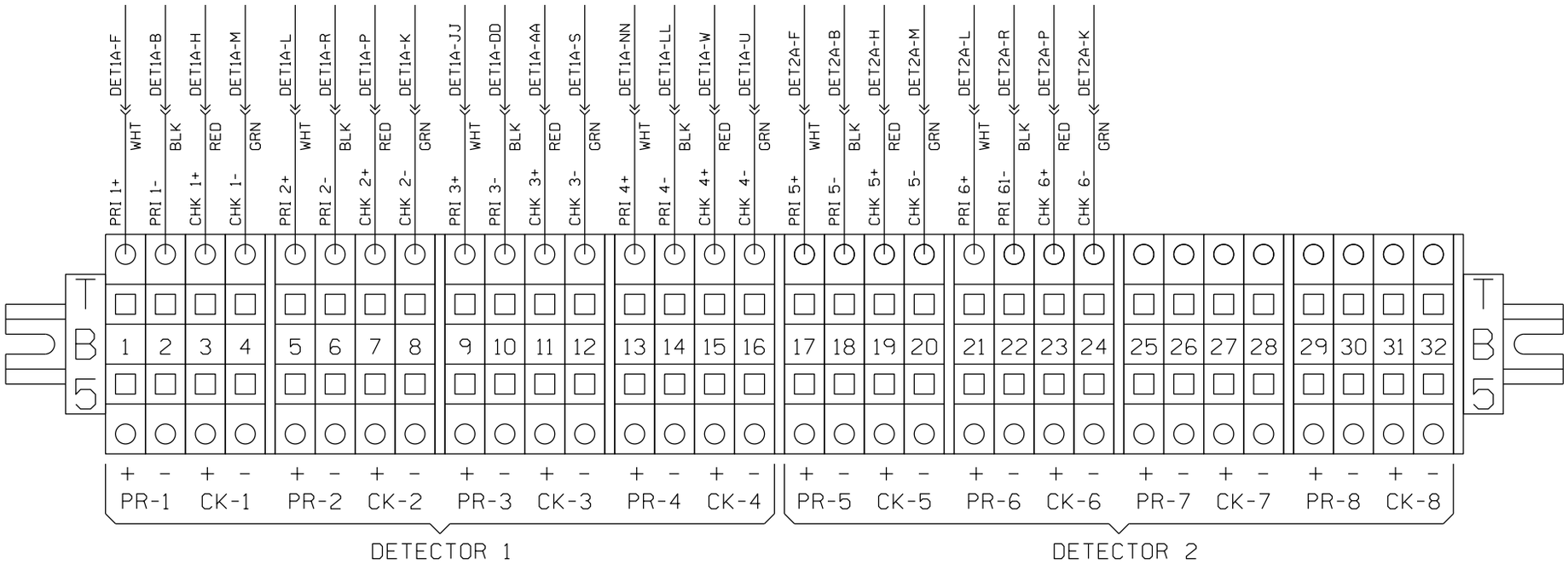

NEW SHEET

					Designed: 09/27/12 TIER IS PHASE 1 M.P. 239.70 TO M.P. 255.35 TO UPGRADE XING TO 4 QUAD WITH EGMS, VARIOUS C.P.'S. Rec#: WO#: 10804 IS: NBT / / /NST/MJF	MODIFICATION LEVEL		CIRCUIT MODIFICATIONS ARE NOT TO BE MADE WITHOUT AUTHORITY FROM THE OFFICE OF SIGNAL DESIGN	Date: 09/27/12 Des: NST Chk: NBT AFE: 10804	UNION PACIFIC RAILROAD SHIPMAN, ILLINOIS BACHMAN ROAD SPRINGFIELD SUBDIVISION Office of AVP Engineering - Signal Omaha, Nebraska	Sh.: 9C DOT 294411S MP: 241.28 ID: CSL24128.9CX
						O. A. LAST LEVEL CHECKED	DU				
						LAST LEVEL MOD THIS TYPICAL	DU				
						LAST LEVEL BY DESIGNER	DU				
						CHANGED FROM TYPICAL? REV 01.24.11 4K 2TKEGMS.9D	Y				

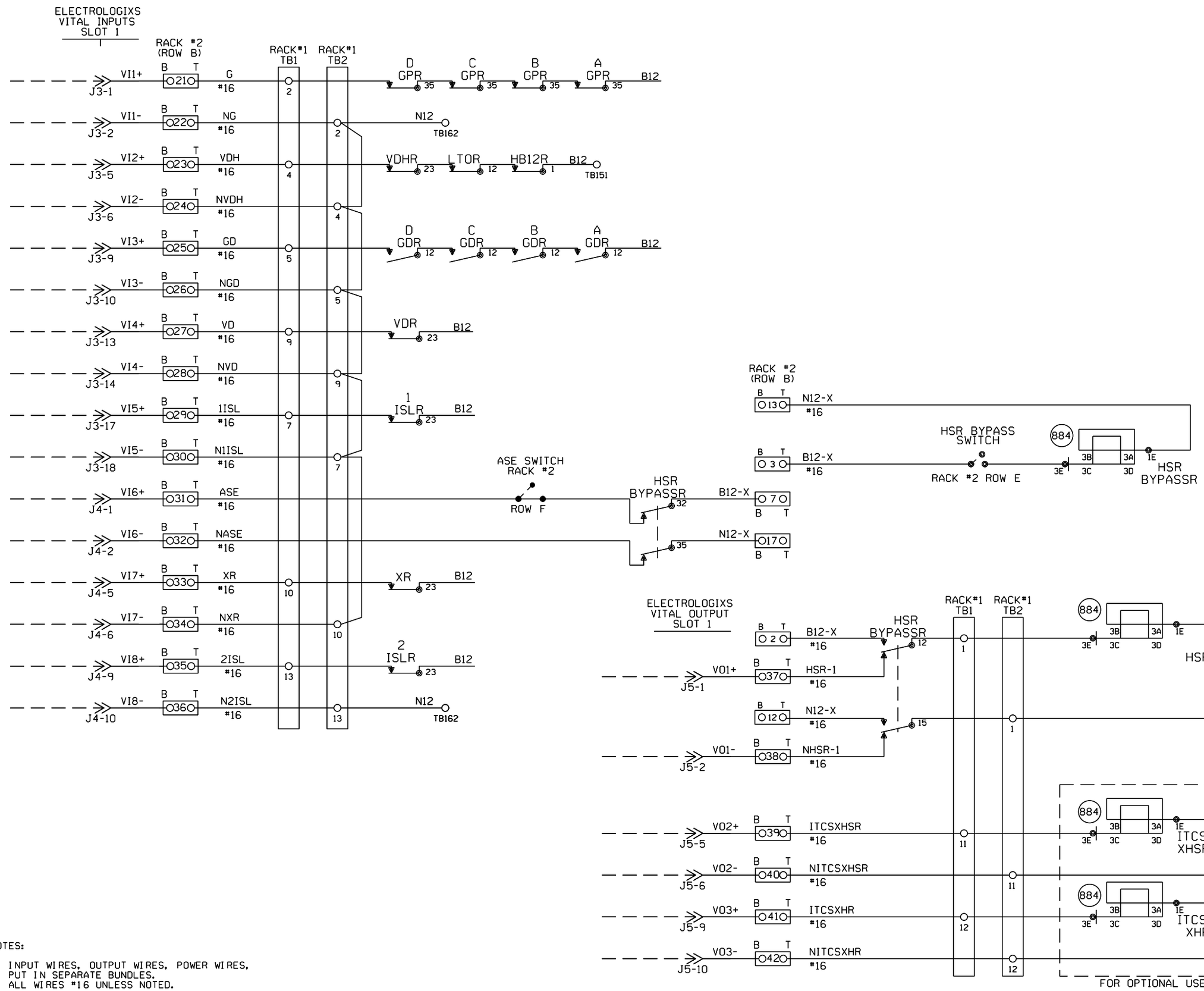

NOTES:

1. INPUT WIRES, OUTPUT WIRES, POWER WIRES, PUT IN SEPARATE BUNDLES.
2. ALL WIRES #16 UNLESS NOTED.
3. O?? O 2 POSITION WAGO BLOCK.

NEW SHEET

Designed: 09/27/12
TIER IS PHASE 1 M.P. 239.70 TO M.P. 255.35 TO UPGRADE XING TO 4 QUAD WITH EGMS, VARIOUS C.P.'S
Rec*: WO*: 10804
IS: NBT / / /NST/MJF

CIRCUIT MODIFICATIONS ARE NOT TO BE MADE WITHOUT AUTHORITY FROM THE OFFICE OF SIGNAL DESIGN

Date:	09/27/12
Des:	NST
Chk:	NBT
AFE:	10804

UNION PACIFIC RAILROAD
SHIPMAN, ILLINOIS
BACHMAN ROAD
SPRINGFIELD SUBDIVISION
Office of AVP Engineering - Signal — Omaha, Nebraska

Sh.:	10
DOT	294411S
MP:	241.28
ID:	CSL24128.10X

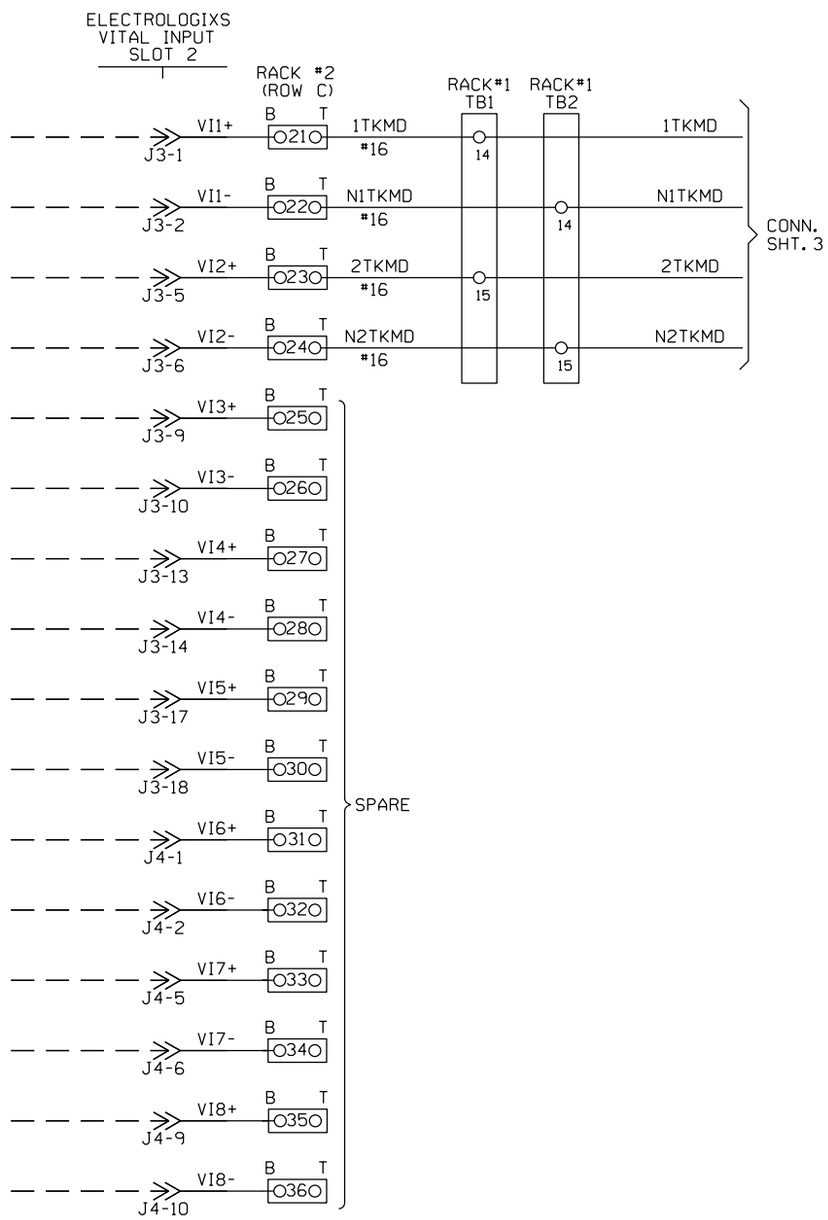

NOTES:

1. INPUT WIRES, OUTPUT WIRES, POWER WIRES, PUT IN SEPARATE BUNDLES.
2. ALL WIRES #16 UNLESS NOTED.
3. O??O 2 POSITION WAGO BLOCK.

NEW SHEET

							Designed: 09/27/12 TIER 1S PHASE 1 M.P. 239.70 TO M.P. 255.35 TO UPGRADE XING TO 4 QUAD WITH EGMS, VARIOUS C.P.'S Rec#: WO#: 10804 1S: NBT/ / /NST/MJF	CIRCUIT MODIFICATIONS ARE NOT TO BE MADE WITHOUT AUTHORITY FROM THE OFFICE OF SIGNAL DESIGN	Date: 09/27/12 Des: NST Chk: NBT AFE: 10804	UNION PACIFIC RAILROAD SHIPMAN, ILLINOIS BACHMAN ROAD SPRINGFIELD SUBDIVISION Office of AVP Engineering - Signal Omaha, Nebraska	Sh.: 10A DOT 294411S MP: 241.28 ID: CSL24128.10AX

WIRING NOTE:
WIRE 30' LONG WIRES TO BSA-4

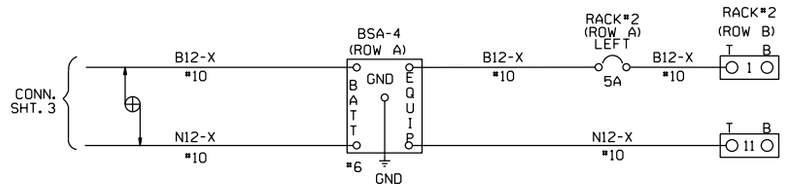

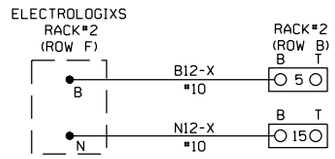

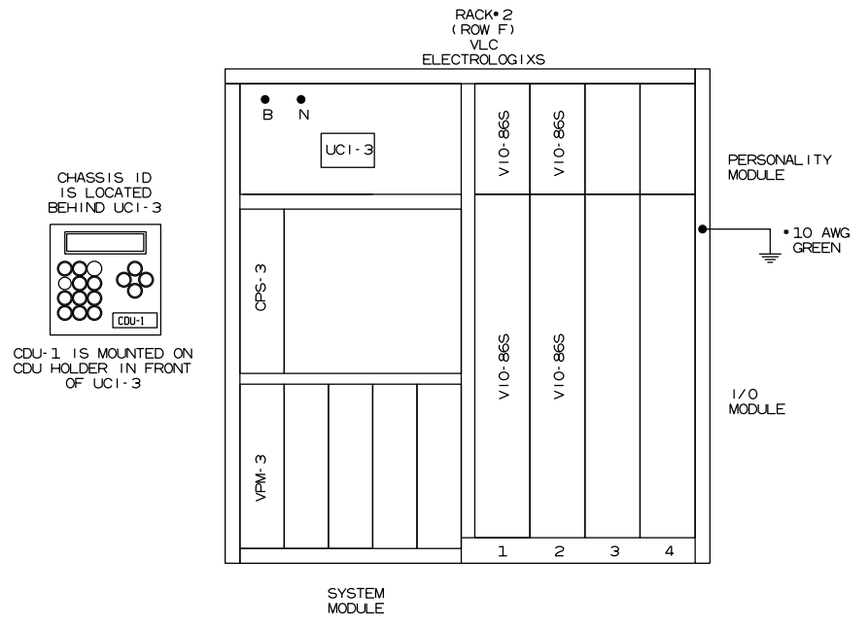

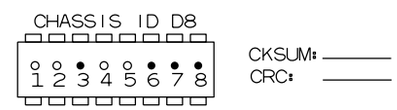

○ = TAB INTACT
● = TAB PUNCHED OUT

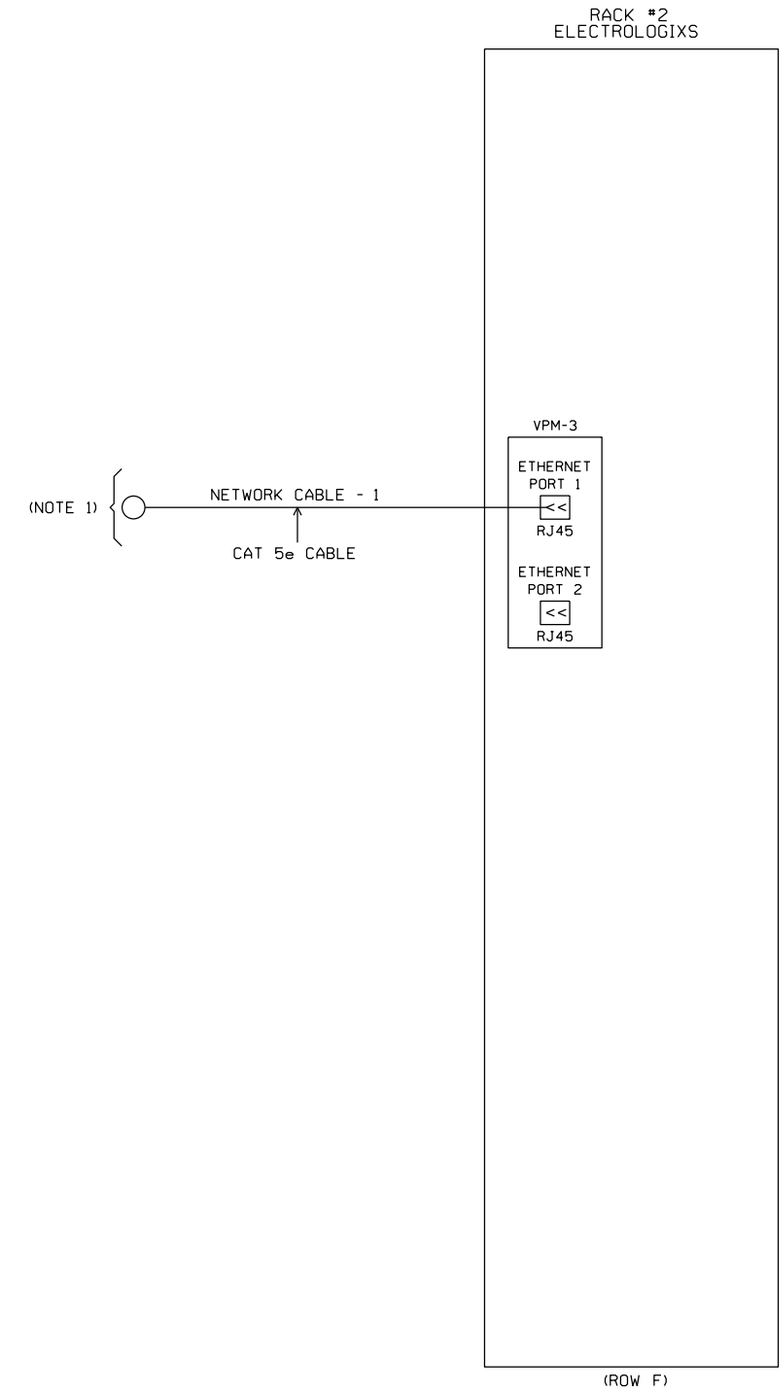

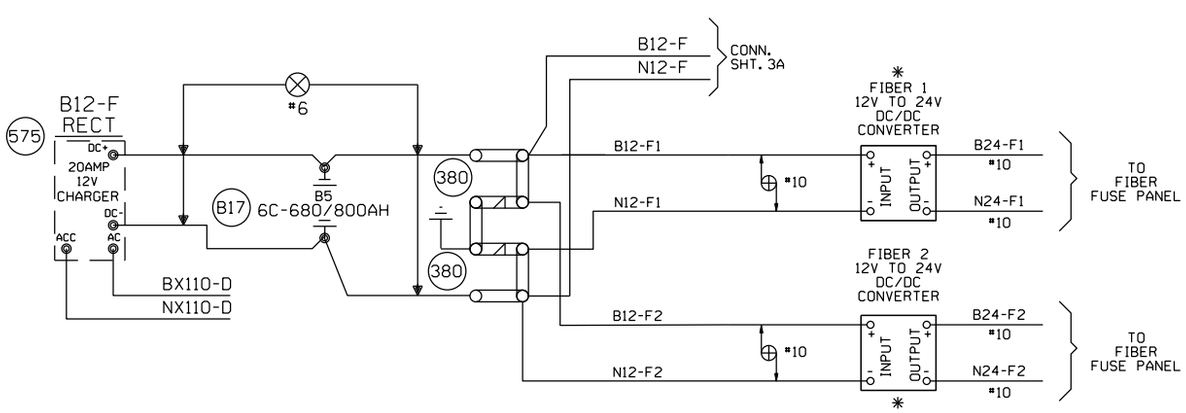

NOTES:

1. NETWORK SWITCH INSTALLED BY RR.

DENOTES TWISTED PAIR

O?? O 2 POSITION WAGO BLOCK

✳ - TO BE FIELD MOUNTED AFTER IT IS DETERMINED WHERE TO MOUNT.

NEW SHEET

							Designed: 09/27/12 TIER 1S PHASE 1 M.P. 239.70 TO M.P. 255.35 TO UPGRADE XING TO 4 QUAD WITH EGMS, VARIOUS C.P.'S Rec#: WO#: 10804 IS: NBT/ / /NST/MJF	CIRCUIT MODIFICATIONS ARE NOT TO BE MADE WITHOUT AUTHORITY FROM THE OFFICE OF SIGNAL DESIGN	Date: 09/27/12 Des: NST Chk: NBT AFE: 10804	UNION PACIFIC RAILROAD SHIPMAN, ILLINOIS BACHMAN ROAD SPRINGFIELD SUBDIVISION Office of AVP Engineering - Signal Omaha, Nebraska	Sh.: 10B DOT 294411S MP: 241.28 ID: CSL24128.10BX

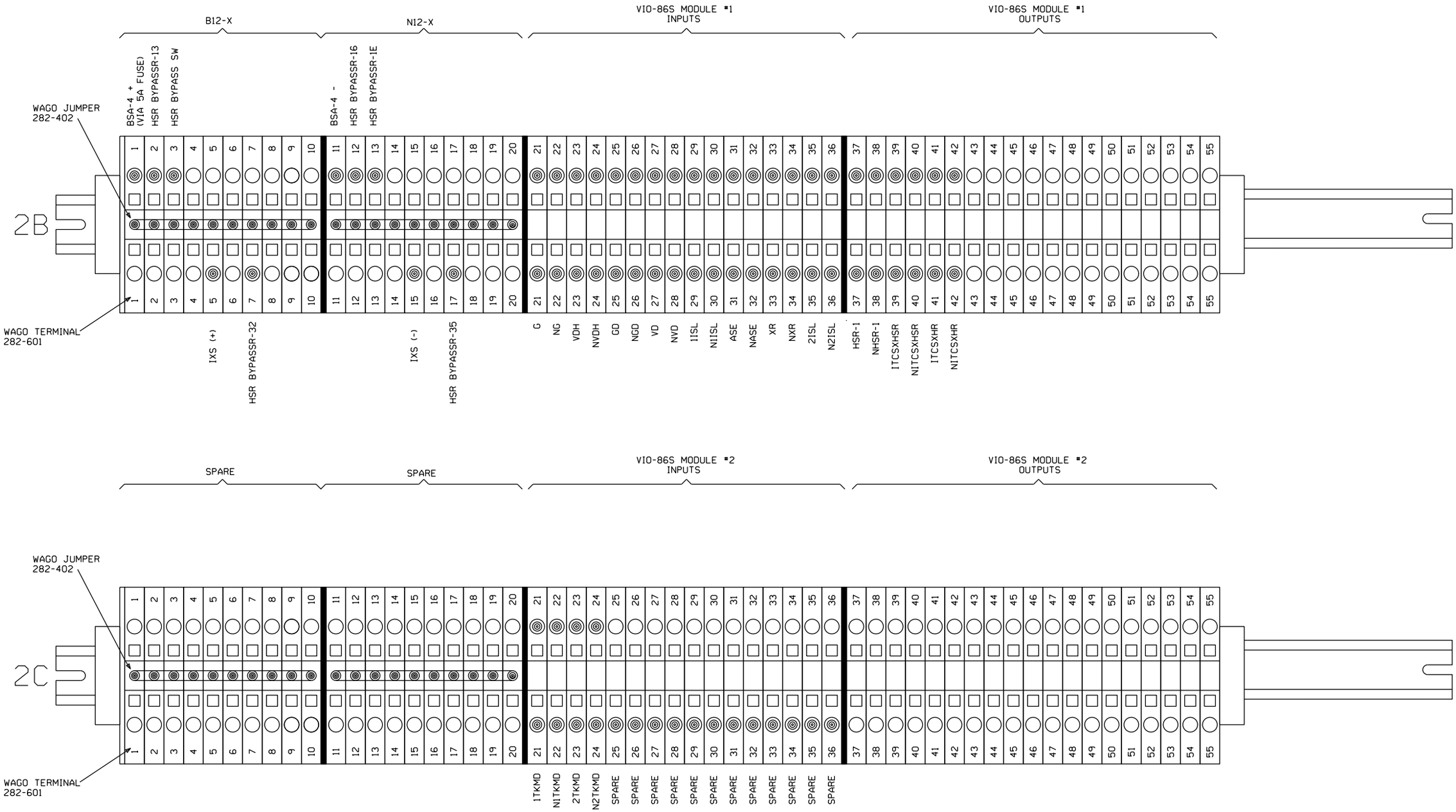

ELECTROLOGIXS WAGO BLOCKS

NEW SHEET

Designed: 09/27/12

TIER 1S PHASE 1 M.P. 239.70 TO M.P. 255.35 TO UPGRADE XING TO 4 QUAD WITH EGMS, VARIOUS C.P.'S

Rec*: WO*: 10804

1S: NBT / / / NST/MJF

CIRCUIT MODIFICATIONS ARE NOT TO BE MADE WITHOUT AUTHORITY FROM THE OFFICE OF SIGNAL DESIGN

Date:	09/27/12
Des:	NST
Chk:	NBT
AFE:	10804

UNION PACIFIC RAILROAD

SHIPMAN, ILLINOIS
BACHMAN ROAD
SPRINGFIELD SUBDIVISION

Office of AVP Engineering - Signal — Omaha, Nebraska

Sh.:	10C
DOT	294411S
MP:	241.28
ID:	CSL24128.10CX

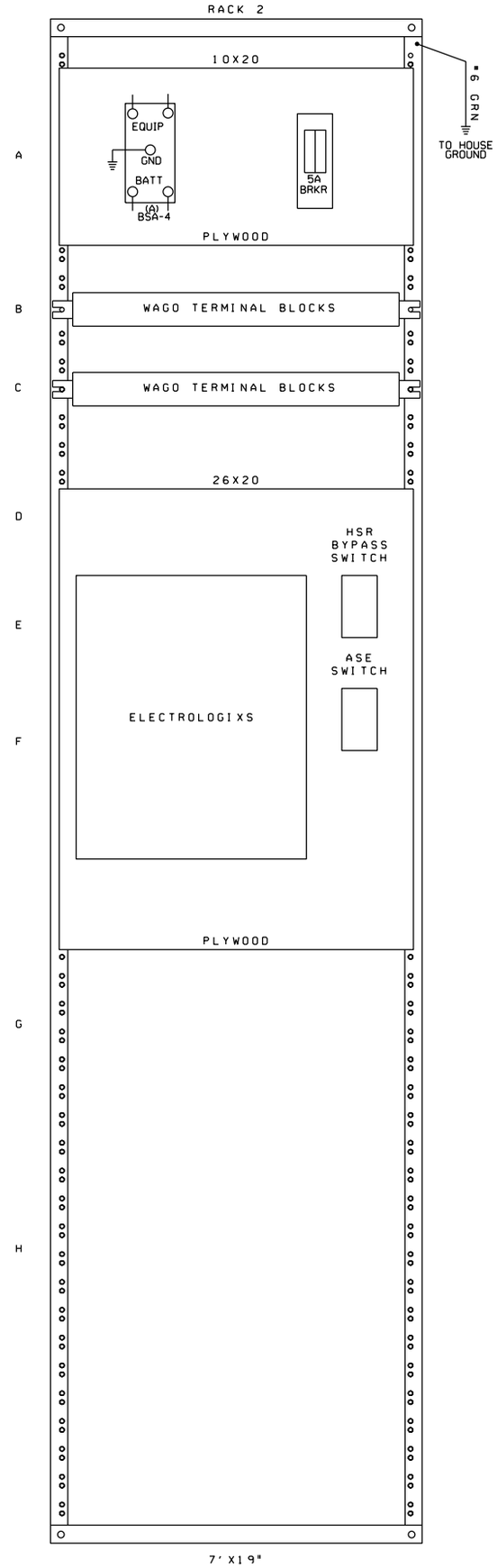

NEW SHEET

Designed: 09/27/12

TIER IS PHASE 1 M.P. 239.70 TO M.P. 255.35 TO UPGRADE XING TO 4 QUAD WITH EGMS, VARIOUS C.P.'S

Rec#: WO#: 10804
IS: NBT/
/ /NST/MJF

CIRCUIT MODIFICATIONS ARE NOT TO BE MADE WITHOUT AUTHORITY FROM THE OFFICE OF SIGNAL DESIGN

Date:	09/27/12
Des:	NST
Chk:	NBT
AFE:	10804

UNION PACIFIC RAILROAD

SHIPMAN, ILLINOIS
BACHMAN ROAD
SPRINGFIELD SUBDIVISION

Office of AVP Engineering - Signal — Omaha, Nebraska

Sh.:	10D
DOT	294411S
MP:	241.28
ID:	CSL24128.10DX

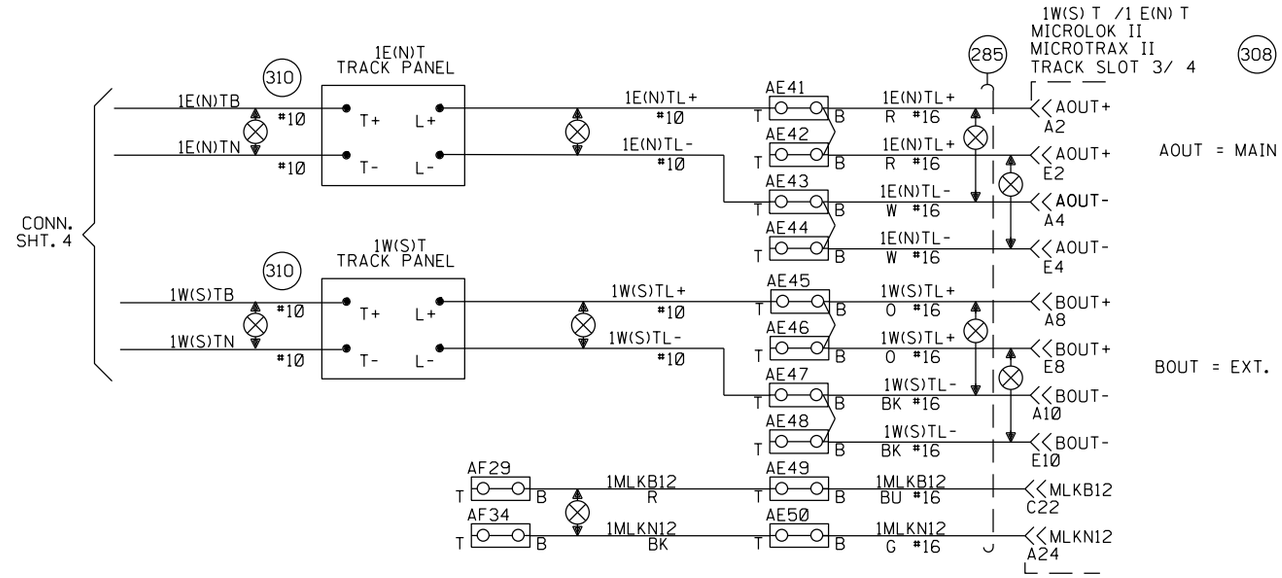

NOTES:

EAST= (N)ORTH.
WEST= (S)OUTH.

⊘ = OBSERVE CORRECT POLARITY. EQUIPMENT WILL BE DAMAGED IF CONNECTIONS ARE REVERSED

ENSURE TRACK POLARITY IS TRANSPOSED ACROSS ALL INSULATED JOINTS.

⧖ = TEST TERMINALS MUST BE INSTALLED ON ALL WIRING CONNECTED TO EXTERNAL CABLES (EXCEPT TRACK AND A.C. POWER WIRES).

SHOW ACTUAL DED INSTALLED LOCATION ON DRAWING.

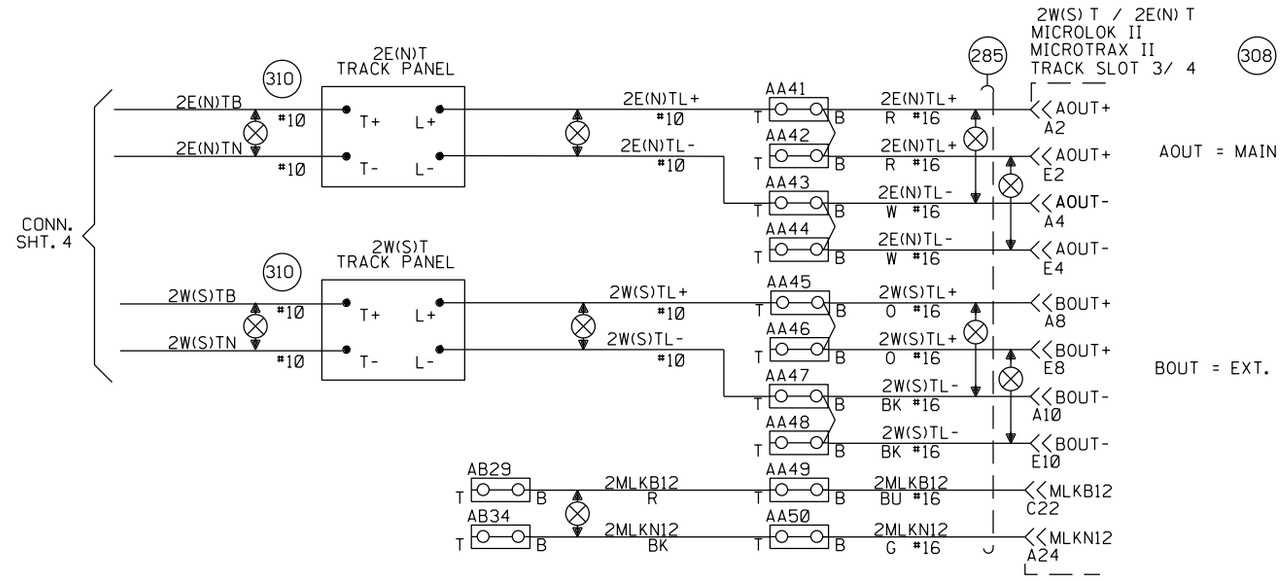

NEW SHEET

					Designed: 09/27/12 TIER IS PHASE 1 M.P. 239.70 TO M.P. 255.35 TO UPGRADE XING TO 4 QUAD WITH EGMS, VARIOUS C.P.'S. Rec#: WO#: 10804 IS: NBT / / / NST/MJF	MODIFICATION LEVEL		CIRCUIT MODIFICATIONS ARE NOT TO BE MADE WITHOUT AUTHORITY FROM THE OFFICE OF SIGNAL DESIGN	Date: 09/27/12	UNION PACIFIC RAILROAD	Sh.: 11
						O. A. LAST LEVEL CHECKED	DS		Des: NST	SHIPMAN, ILLINOIS BACHMAN ROAD SPRINGFIELD SUBDIVISION	DOT 294411S
						LAST LEVEL MOD THIS TYPICAL	DS		Chk: NBT		MP: 241.28
						LAST LEVEL BY DESIGNER	DU				
						CHANGED FROM TYPICAL?	Y		AFE: 10804	Office of AVP Engineering - Signal Omaha, Nebraska	ID: CSL24128.11S
						Rev 8/20/10 1TMLHBINTU.1S					

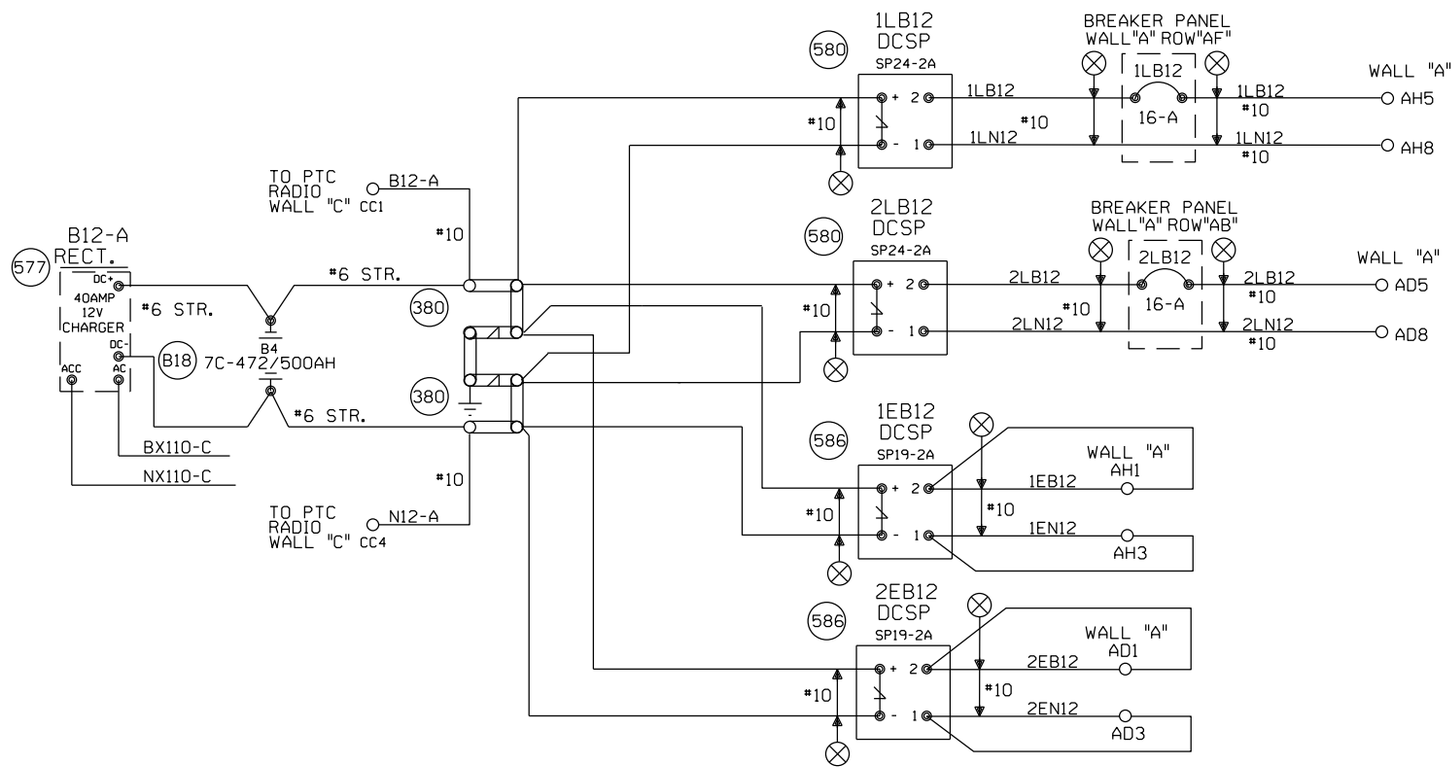

NEW SHEET

					Designed: 09/27/12 TIER IS PHASE 1 M.P. 239.70 TO M.P. 255.35 TO UPGRADE XING TO 4 QUAD WITH EGMS, VARIOUS C.P.'S Rec#: WO#: 10804 IS: NBT / / / NST/MJF	MODIFICATION LEVEL O. A. LAST LEVEL CHECKED DU LAST LEVEL MOD THIS TYPICAL DU LAST LEVEL BY DESIGNER DU CHANGED FROM TYPICAL? Y Rev 8/20/10 ITMLHBINTU.1A	CIRCUIT MODIFICATIONS ARE NOT TO BE MADE WITHOUT AUTHORITY FROM THE OFFICE OF SIGNAL DESIGN	Date: 09/27/12 Des: NST Chk: NBT AFE: 10804	UNION PACIFIC RAILROAD SHIPMAN, ILLINOIS BACHMAN ROAD SPRINGFIELD SUBDIVISION Office of AVP Engineering - Signal Omaha, Nebraska	Sh.: 12 DOT 294411S MP: 241.28 ID: CSL24128.12S

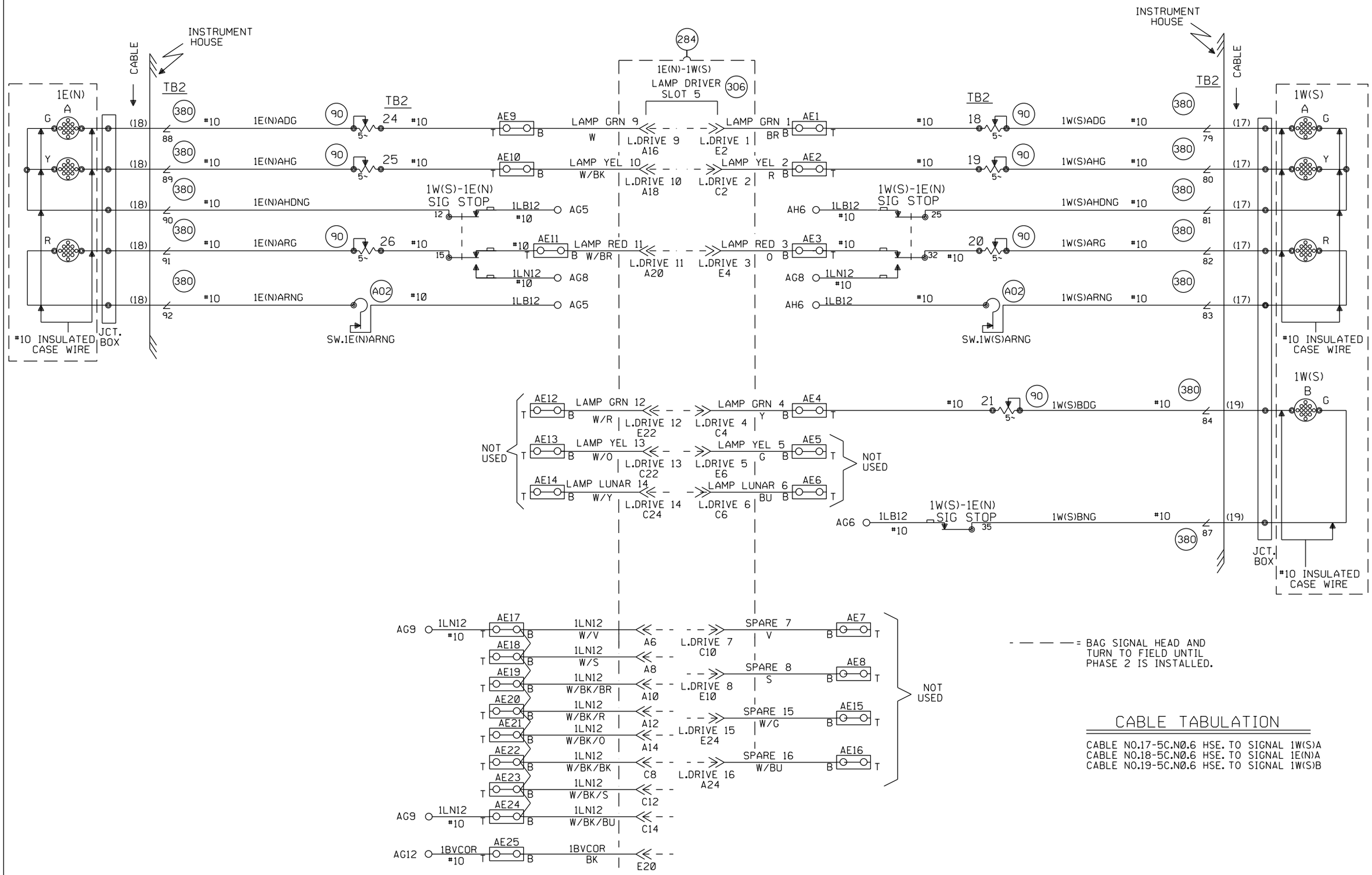

CABLE TABULATION

CABLE NO.17-5C.N0.6 HSE. TO SIGNAL 1W(S)A
CABLE NO.18-5C.N0.6 HSE. TO SIGNAL 1E(N)A
CABLE NO.19-5C.N0.6 HSE. TO SIGNAL 1W(S)B

NEW SHEET

Designed: 09/27/12

TIER IS PHASE 1 M.P. 239.70 TO M.P. 255.35 TO UPGRADE XING TO 4 QUAD WITH ECMS, VARIOUS C.P.'S

Rec*: WO*: 10804
IS: NBT / / /NST/MJF

MODIFICATION LEVEL	
O. A. LAST LEVEL CHECKED	DU
LAST LEVEL MOD THIS TYPICAL	DU
LAST LEVEL BY DESIGNER	DU
CHANGED FROM TYPICAL?	Y

REV 8/20/10 ITMLHBINTU.3

CIRCUIT MODIFICATIONS ARE NOT TO BE MADE WITHOUT AUTHORITY FROM THE OFFICE OF SIGNAL DESIGN

Date: 09/27/12
Des: NST
Chk: NBT
AFE: 10804

UNION PACIFIC RAILROAD

SHIPMAN, ILLINOIS
BACHMAN ROAD
SPRINGFIELD SUBDIVISION

Office of AVP Engineering - Signal Omaha, Nebraska

Sh.: 13
DOT 294411S
MP: 241.28
ID: CSL24128.13S

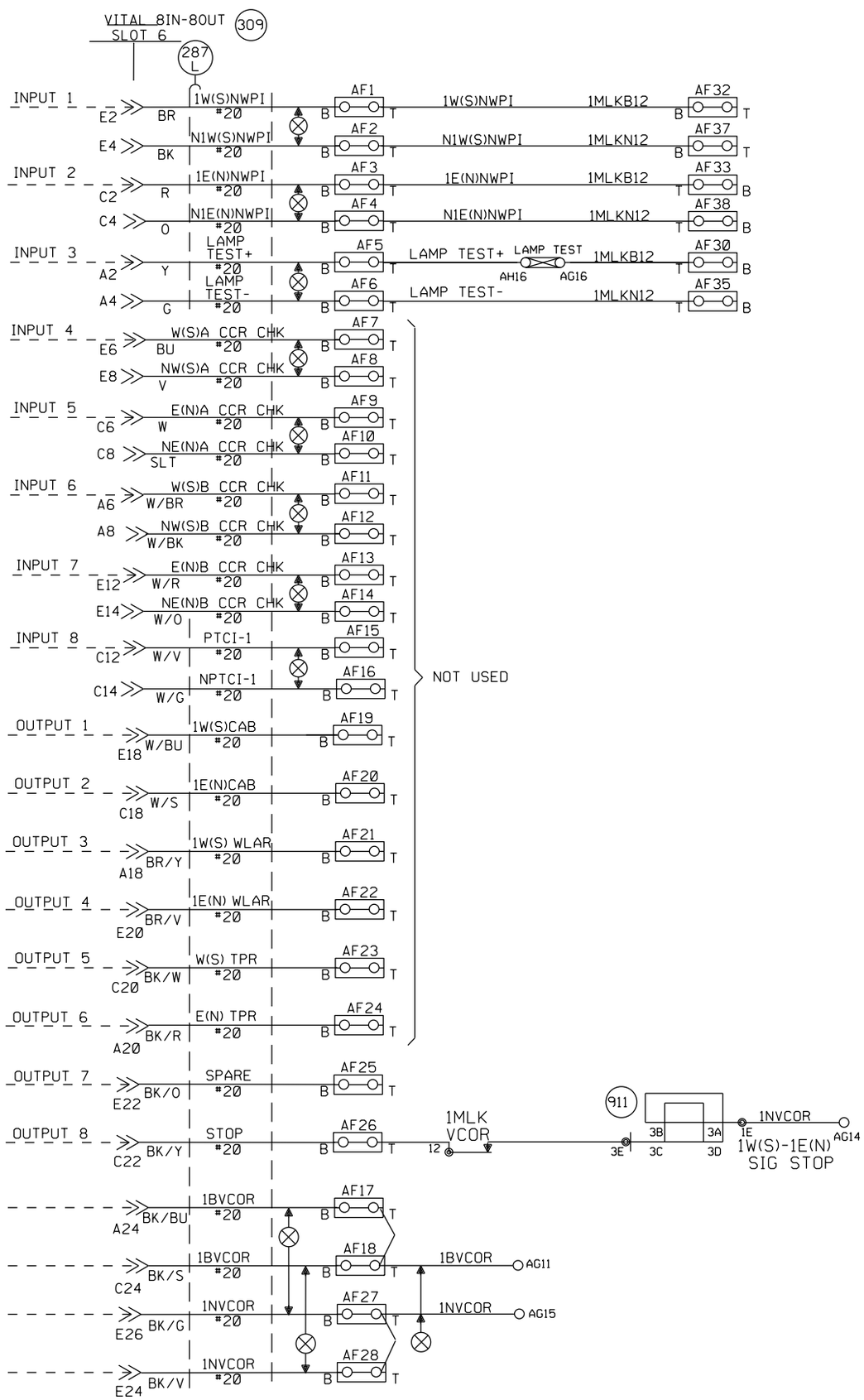

1W(S)-1E(N)T

NEW SHEET

Designed: 09/27/12

TIER IS PHASE 1 M.P. 239.70 TO M.P. 255.35 TO UPGRADE XING TO 4 QUAD WITH EGMS, VARIOUS C.P.'S

Rec#: WO#: 10804

IS: NBT / / /NST/MJF

MODIFICATION LEVEL	
O. A. LAST LEVEL CHECKED	DU
LAST LEVEL MOD THIS TYPICAL	DU
LAST LEVEL BY DESIGNER	DU
CHANGED FROM TYPICAL?	Y

REV 8/20/10 1TMLHBINTU.3A

CIRCUIT MODIFICATIONS ARE NOT TO BE MADE WITHOUT AUTHORITY FROM THE OFFICE OF SIGNAL DESIGN

Date: 09/27/12
Des: NST
Chk: NBT
AFE: 10804

UNION PACIFIC RAILROAD

SHIPMAN, ILLINOIS
BACHMAN ROAD
SPRINGFIELD SUBDIVISION

Office of AVP Engineering - Signal — Omaha, Nebraska

Sh.: 13A
DOT 294411S
MP: 241.28
ID: CSL24128.13AS

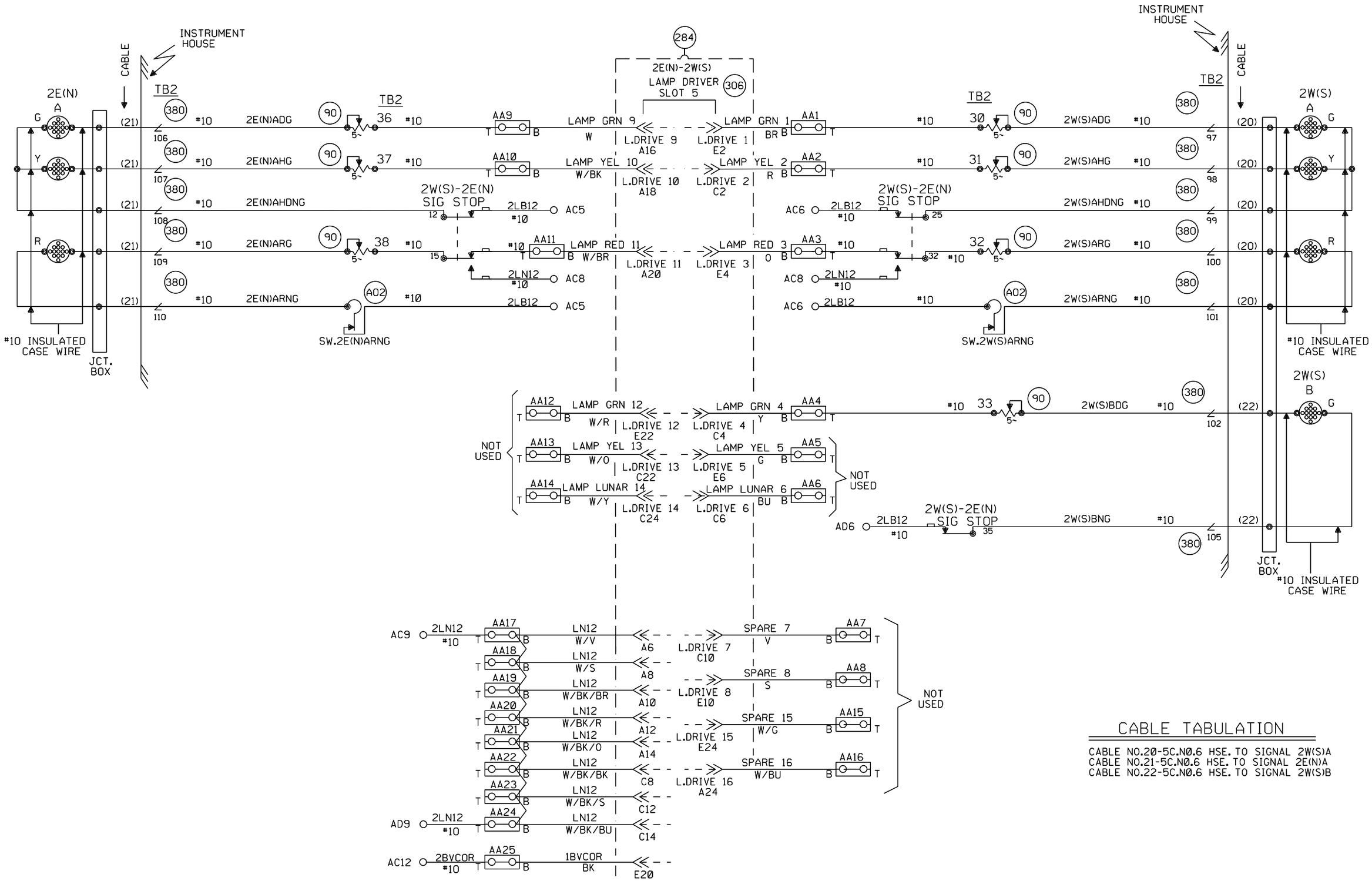

CABLE TABULATION

CABLE NO.20-5C.N0.6 HSE. TO SIGNAL 2W(S)A
CABLE NO.21-5C.N0.6 HSE. TO SIGNAL 2E(N)A
CABLE NO.22-5C.N0.6 HSE. TO SIGNAL 2W(S)B

NEW SHEET

Designed: 09/27/12
TIER IS PHASE 1 M.P. 239.70 TO M.P. 255.35 TO UPGRADE XING TO 4 QUAD WITH EGMS, VARIOUS C.P.'S
Rec*: WO*: 10804
IS: NBT / / /NST/MJF

MODIFICATION LEVEL	
O. A. LAST LEVEL CHECKED	DU
LAST LEVEL MOD THIS TYPICAL	DU
LAST LEVEL BY DESIGNER	DU
CHANGED FROM TYPICAL?	Y

rev 8/20/10 1TMLHBINTUGS.3

CIRCUIT MODIFICATIONS ARE NOT TO BE MADE WITHOUT AUTHORITY FROM THE OFFICE OF SIGNAL DESIGN

Date: 09/27/12
Des: NST
Chk: NBT
AFE: 10804

UNION PACIFIC RAILROAD
SHIPMAN, ILLINOIS
BACHMAN ROAD
SPRINGFIELD SUBDIVISION
Office of AVP Engineering - Signal Omaha, Nebraska

Sh.: 14
DOT 294411S
MP: 241.28
ID: CSL24128.14S

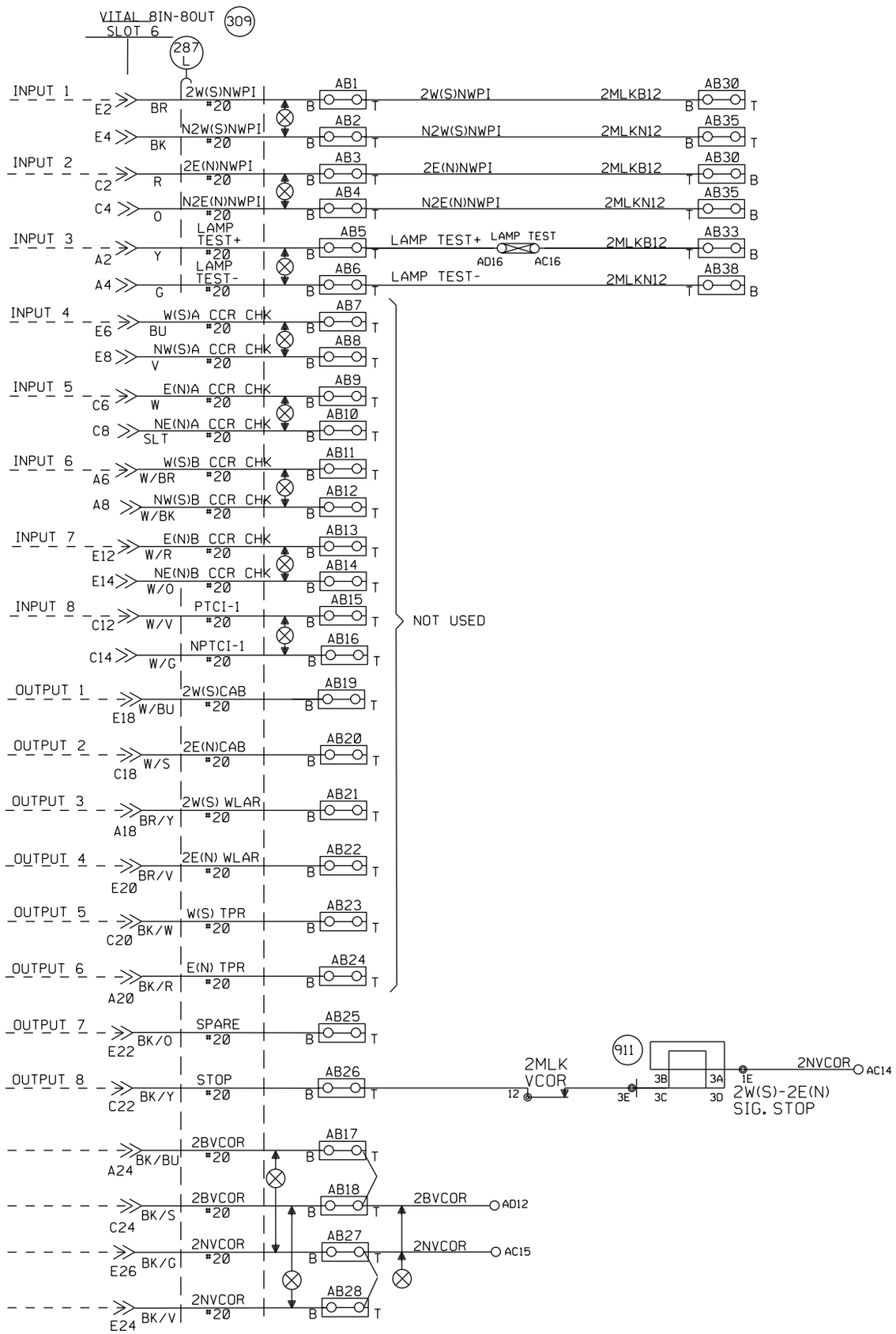

2W(S)-2E(N)T

NEW SHEET

					Designed: 09/27/12 TIER IS PHASE 1 M.P. 239.70 TO M.P. 255.35 TO UPGRADE XING TO 4 QUAD WITH EGMS, VARIOUS C.P.'S Rec*: WO*: 10804 IS: NBT / / / NST/MJF	MODIFICATION LEVEL Q. A. LAST LEVEL CHECKED DU LAST LEVEL MOD THIS TYPICAL DU LAST LEVEL BY DESIGNER DU CHANGED FROM TYPICAL? Y REV 8/20/10 ITMLHBINTU. 3A	CIRCUIT MODIFICATIONS ARE NOT TO BE MADE WITHOUT AUTHORITY FROM THE OFFICE OF SIGNAL DESIGN	Date: 09/27/12 Des: NST Chk: NBT AFE: 10804	UNION PACIFIC RAILROAD SHIPMAN, ILLINOIS BACHMAN ROAD SPRINGFIELD SUBDIVISION Office of AVP Engineering - Signal Omaha, Nebraska	Sh.: 14A DOT 294411S MP: 241.28 ID: CSL24128.14AS

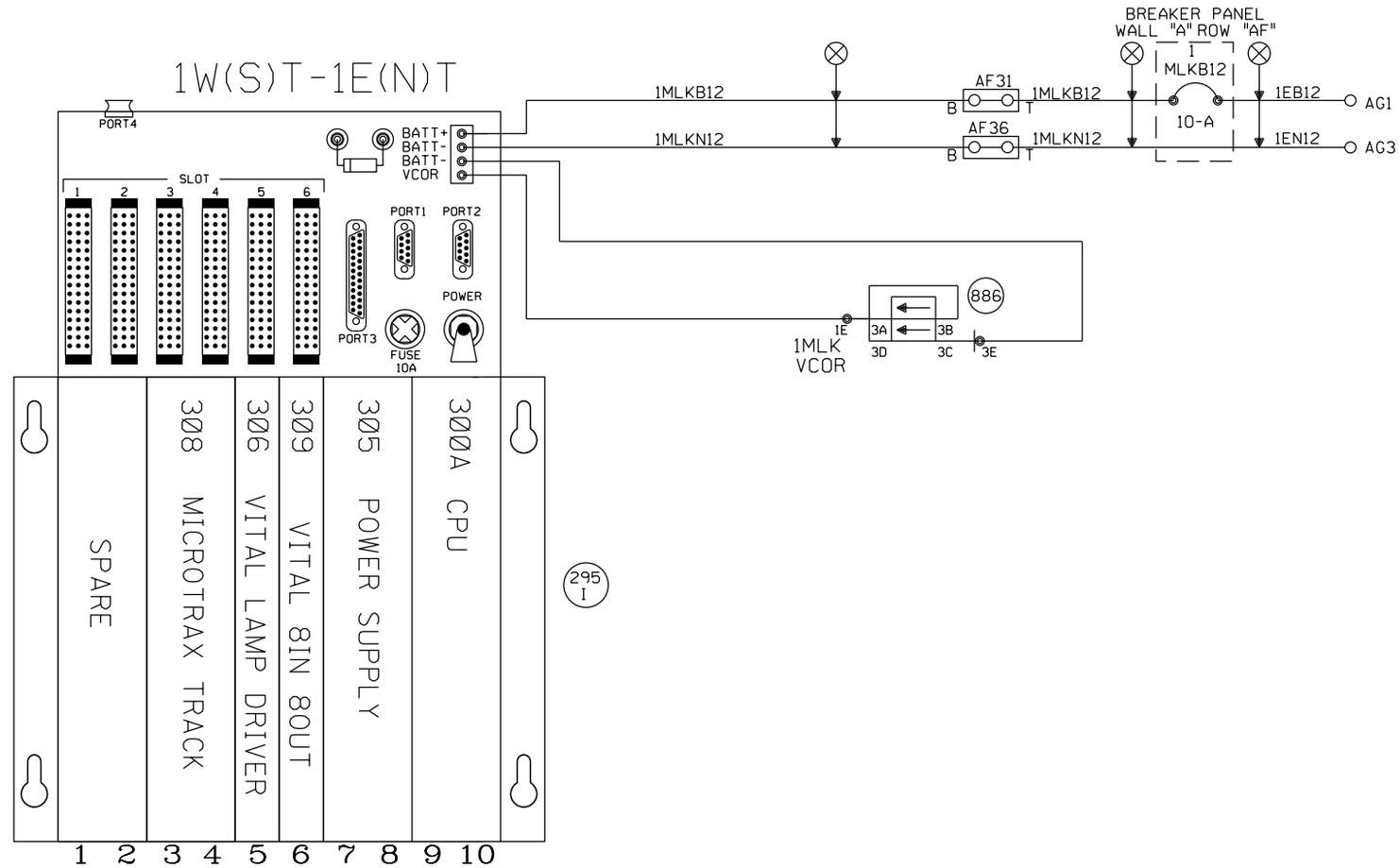

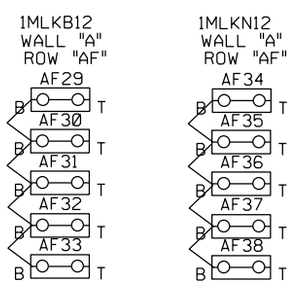

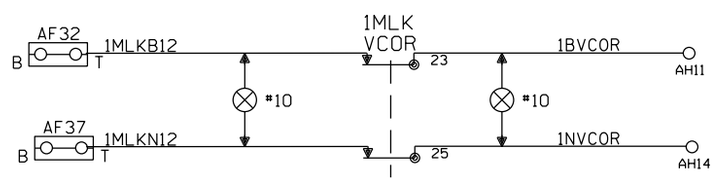

NEW SHEET

					Designed: 09/27/12 TIER IS PHASE 1 M.P. 239.70 TO M.P. 255.35 TO UPGRADE XING TO 4 QUAD WITH EGMS, VARIOUS C.P.'S Rec#: WO#: 10804 IS: NBT / / /NST/MJF	MODIFICATION LEVEL O. A. LAST LEVEL CHECKED DU LAST LEVEL MOD THIS TYPICAL DU LAST LEVEL BY DESIGNER DU CHANGED FROM TYPICAL? Y REV 8/20/10 1TMLHBINTU.4	CIRCUIT MODIFICATIONS ARE NOT TO BE MADE WITHOUT AUTHORITY FROM THE OFFICE OF SIGNAL DESIGN	Date: 09/27/12 Des: NST Chk: NBT AFE: 10804	UNION PACIFIC RAILROAD SHIPMAN, ILLINOIS BACHMAN ROAD SPRINGFIELD SUBDIVISION Office of AVP Engineering - Signal Omaha, Nebraska	Sh.: 15 DOT 294411S MP: 241.28 ID: CSL24128.15S

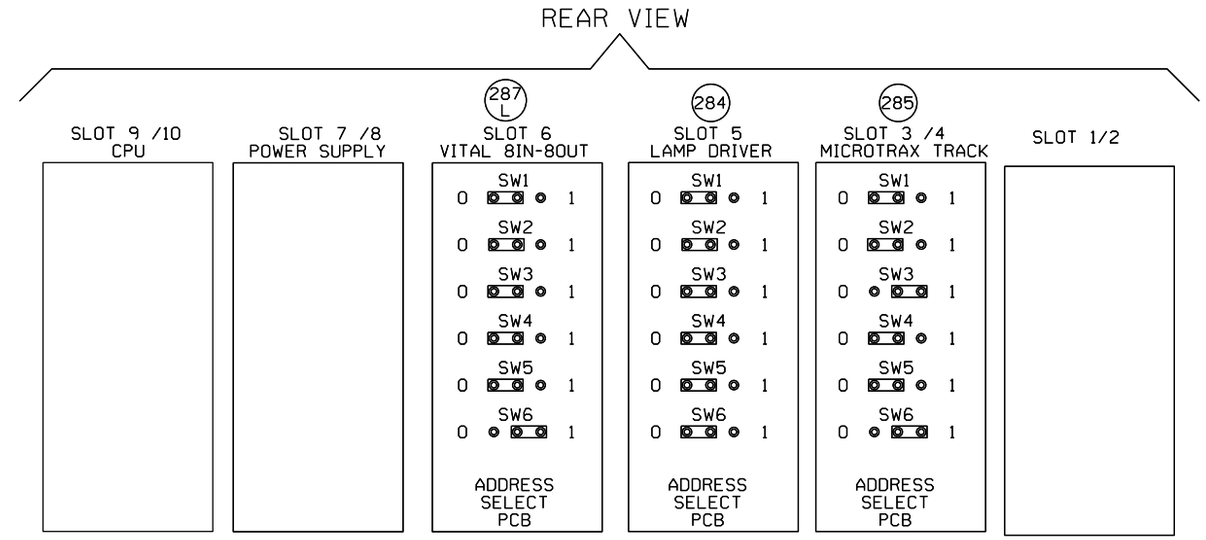

NOTE: FOR PTC COMPATIBLE CPU JUMPER SETTINGS REFER TO ANSALDO MANUAL 1D1.0028 PAGE 1-26 1-27 1-28 REV.1 DATE 8/2009

IF BOX CHECKED SET APPROPRIATE PROG. ID

ML8UP5060 REV.N		
15 SEC SLOW PICK ET TO PREVENT JOINT HOP		USE WHEN INTERFACING MICRO-ECODE TO GETS ECODE
15 SEC SLOW PICK WT TO PREVENT JOINT HOP		USE WHEN INTERFACING MICRO-ECODE TO GETS ECODE
APPROACH TO #30 WEST?		(SET PROG ID 1)
APPROACH TO #30 EAST?		(SET PROG ID 2)
Y/G W/B SEND Y/FG EAST?		(SET PROG ID 3)
Y/G E/B SEND Y/FG WEST?		(SET PROG ID 5)
Y/G W/B SEND GREEN EAST?	X	(SET PROG ID 4)
Y/G E/B SEND GREEN WEST?		(SET PROG ID 6)
Y/FG W/B SEND GREEN EAST		(SET PROG ID 8)
Y/FG E/B SEND GREEN WEST		(SET PROG ID 9)
PROGRAM ID 1 (BINARY 1)		
PROGRAM ID 2 (BINARY 2)		
PROGRAM ID 3 (BINARY 4)		
PROGRAM ID 4 (BINARY 8)	X	
PROGRAM ID 5 (BINARY 16)		
PROGRAM ID 6 (BINARY 32)		
PROGRAM ID 7 (BINARY 64)		(SET TO DISABLE VIO8 CAB)
PROGRAM ID 8 (BINARY 128)		
PROGRAM ID 9 (BINARY 256)		
PROGRAM ID 10 (BINARY 512)		(MUST BE CLEAR)
PROGRAM ID 11 (BINARY 1024)	X	(MUST BE SET)
PROGRAM ID 12 (BINARY 2048)		(SET TO DISABLE INCAND. SIG BOARD)
PROGRAM ID 13 (BINARY 4096)	X	(SET TO DISABLE LED SIG BOARD)
PROGRAM ID 14 (BINARY 8192)		
PROGRAM ID 15 (BINARY 16384)		
PROGRAM ID 16 (BINARY 32768)		
PROGRAM ID 17 (BINARY 65536)	X	
PROGRAM ID 18 (BINARY 131072)		
PROGRAM ID 19 (BINARY 262144)		
PROGRAM ID 20 (BINARY 524288)		
PROGRAM ID 21 (BINARY 1048576)		
WEST TK UP SEND C5 EAST	X	
REC C5 W TK SEND C5 EAST		
EAST TK UP SEND C5 WEST	X	
REC C5 E TK SEND C5 WEST		
W(S) "B" HEAD FLASHING RED		(SET PROG ID 14)
W(S) "B" HEAD LUNAR		(SET PROG ID 15)
W(S) "B" HEAD YELLOW		(SET PROG ID 16)
W(S) "B" HEAD GREEN	X	(SET PROG ID 17)
E(N) "B" HEAD FLASHING RED		(SET PROG ID 18)
E(N) "B" HEAD LUNAR		(SET PROG ID 19)
E(N) "B" HEAD YELLOW		(SET PROG ID 20)
E(N) "B" HEAD GREEN		(SET PROG ID 21)
E(N) C5 APPLIT	X	(ENABLE APPLIT W(S) SIG W/LOSS OF C5)
W(S) C5 APPLIT	X	(ENABLE APPLIT E(N) SIG W/LOSS OF C5)

PLACE AN "X" IN THE BOX TO REPRESENT A SET STATE.

1W(S)-1E(N)T

NEW SHEET

Designed: 09/27/12
TIER IS PHASE 1 M.P. 239.70 TO M.P. 255.35 TO UPGRADE XING TO 4 QUAD WITH EGMS, VARIOUS C.P.'S
Rec#: WO#: 10804
IS: NBT /
/ /NST/MJF

MODIFICATION LEVEL	
O. A. LAST LEVEL CHECKED	DU
LAST LEVEL MOD THIS TYPICAL	DU
LAST LEVEL BY DESIGNER	DU
CHANGED FROM TYPICAL?	Y

rev 8/20/10 1TMLHBINTU.5

CIRCUIT MODIFICATIONS ARE NOT TO BE MADE WITHOUT AUTHORITY FROM THE OFFICE OF SIGNAL DESIGN

Date: 09/27/12
Des: NST
Chk: NBT
AFE: 10804

UNION PACIFIC RAILROAD
SHIPMAN, ILLINOIS
BACHMAN ROAD
SPRINGFIELD SUBDIVISION
Office of AVP Engineering - Signal Omaha, Nebraska

Sh.: 16
DOT 294411S
MP: 241.28
ID: CSL24128.16S

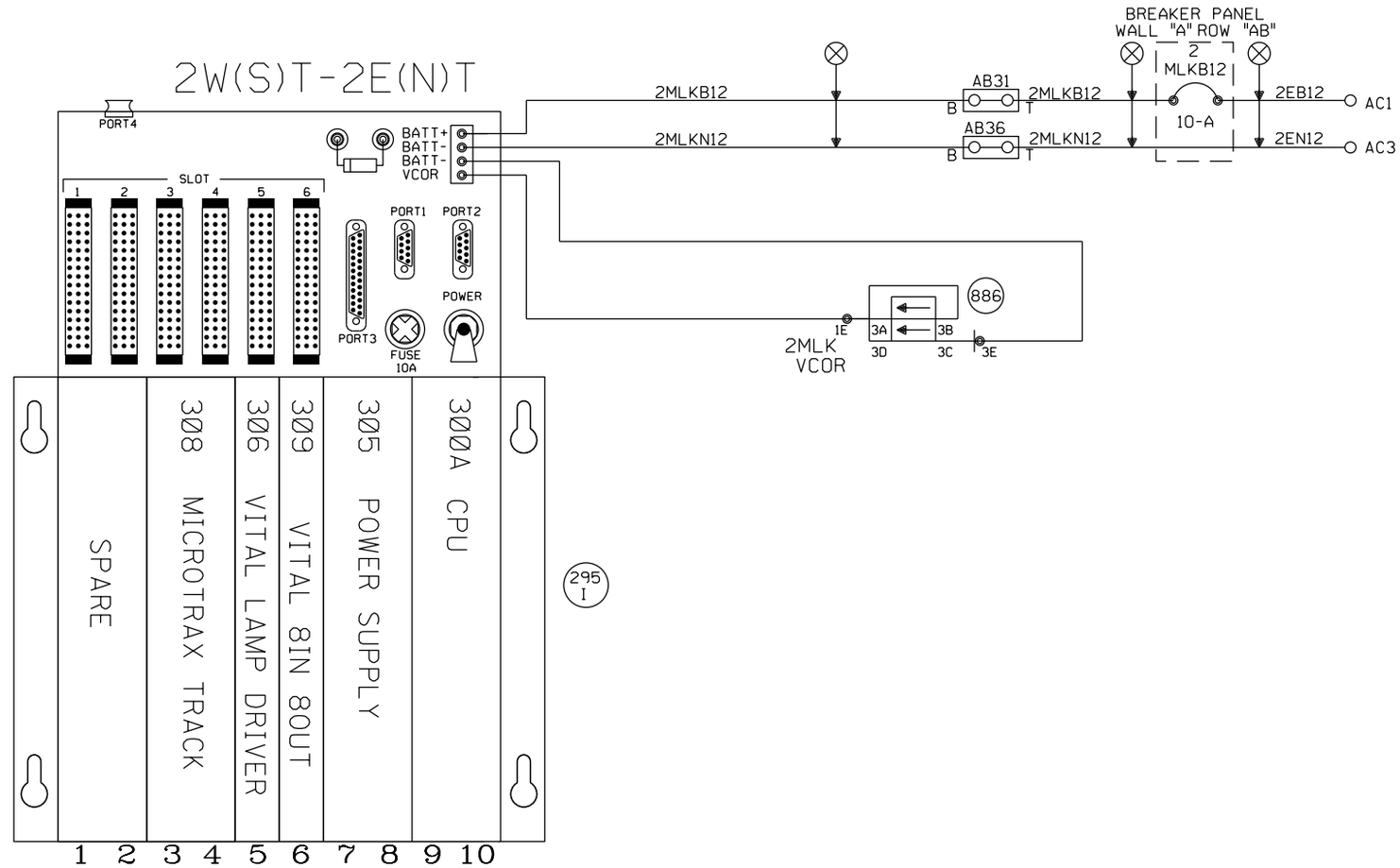

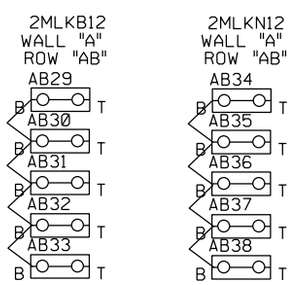

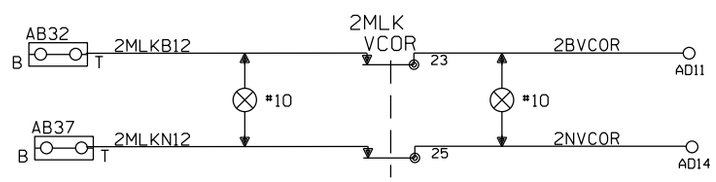

NEW SHEET

					Designed: 09/27/12 TIER IS PHASE 1 M.P. 239.70 TO M.P. 255.35 TO UPGRADE XING TO 4 QUAD WITH EGMS, VARIOUS C.P.'S Rec#: WO#: 10804 IS: NBT / / /NST/MJF	MODIFICATION LEVEL O. A. LAST LEVEL CHECKED DU LAST LEVEL MOD THIS TYPICAL DU LAST LEVEL BY DESIGNER DU CHANGED FROM TYPICAL? Y REV 8/20/10 1TMLHBINTU.4	CIRCUIT MODIFICATIONS ARE NOT TO BE MADE WITHOUT AUTHORITY FROM THE OFFICE OF SIGNAL DESIGN	Date: 09/27/12 Des: NST Chk: NBT AFE: 10804	UNION PACIFIC RAILROAD SHIPMAN, ILLINOIS BACHMAN ROAD SPRINGFIELD SUBDIVISION Office of AVP Engineering - Signal Omaha, Nebraska	Sh.: 17 DOT 294411S MP: 241.28 ID: CSL24128.17S

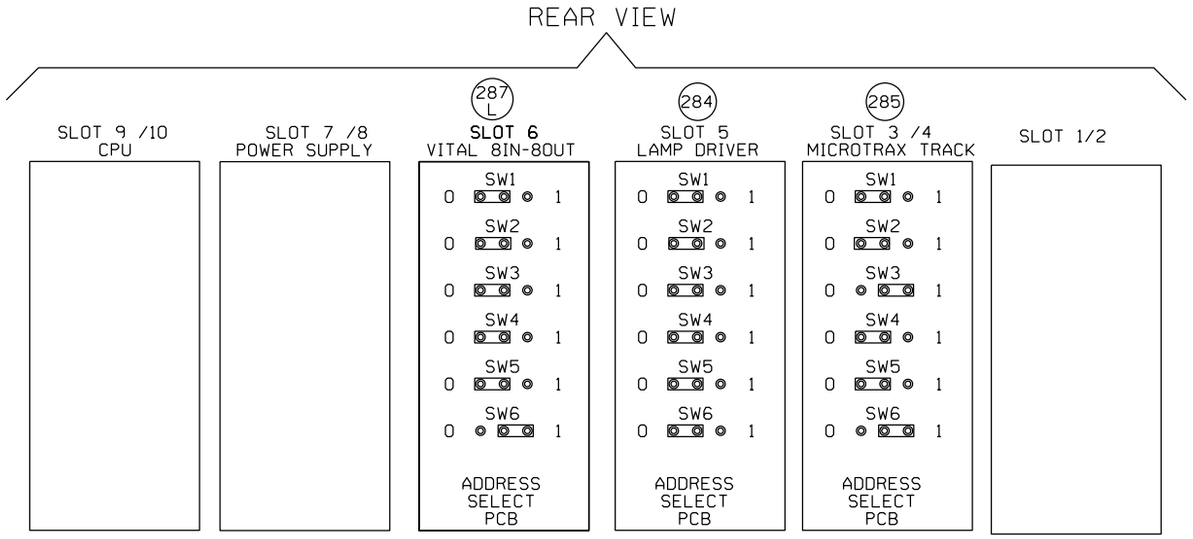

NOTE: FOR PTC COMPATIBLE CPU JUMPER SETTINGS REFER TO ANSALDO MANUAL 1D1.0028 PAGE 1-26 1-27 1-28 REV.1 DATE 8/2009

IF BOX CHECKED SET APPROPRIATE PROG. ID

ML8UP5060 REV.N		
15 SEC SLOW PICK ET TO PREVENT JOINT HOP		USE WHEN INTERFACING MICRO-ECODE TO GETS ECODE
15 SEC SLOW PICK WT TO PREVENT JOINT HOP		USE WHEN INTERFACING MICRO-ECODE TO GETS ECODE
APPROACH TO #30 WEST?		(SET PROG ID 1)
APPROACH TO #30 EAST?		(SET PROG ID 2)
Y/G W/B SEND Y/FG EAST?		(SET PROG ID 3)
Y/G E/B SEND Y/FG WEST?		(SET PROG ID 5)
Y/G W/B SEND GREEN EAST?	X	(SET PROG ID 4)
Y/G E/B SEND GREEN WEST?		(SET PROG ID 6)
Y/FG W/B SEND GREEN EAST		(SET PROG ID 8)
Y/FG E/B SEND GREEN WEST		(SET PROG ID 9)
PROGRAM ID 1 (BINARY 1)		
PROGRAM ID 2 (BINARY 2)		
PROGRAM ID 3 (BINARY 4)		
PROGRAM ID 4 (BINARY 8)	X	
PROGRAM ID 5 (BINARY 16)		
PROGRAM ID 6 (BINARY 32)		
PROGRAM ID 7 (BINARY 64)		(SET TO DISABLE VIO8 CAB)
PROGRAM ID 8 (BINARY 128)		
PROGRAM ID 9 (BINARY 256)		
PROGRAM ID 10 (BINARY 512)		(MUST BE CLEAR)
PROGRAM ID 11 (BINARY 1024)	X	(MUST BE SET)
PROGRAM ID 12 (BINARY 2048)		(SET TO DISABLE INCAND. SIG BOARD)
PROGRAM ID 13 (BINARY 4096)	X	(SET TO DISABLE LED SIG BOARD)
PROGRAM ID 14 (BINARY 8192)		
PROGRAM ID 15 (BINARY 16384)		
PROGRAM ID 16 (BINARY 32768)		
PROGRAM ID 17 (BINARY 65536)	X	
PROGRAM ID 18 (BINARY 131072)		
PROGRAM ID 19 (BINARY 262144)		
PROGRAM ID 20 (BINARY 524288)		
PROGRAM ID 21 (BINARY 1048576)		
WEST TK UP SEND C5 EAST	X	
REC C5 W TK SEND C5 EAST		
EAST TK UP SEND C5 WEST	X	
REC C5 E TK SEND C5 WEST		
W(S) "B" HEAD FLASHING RED		(SET PROG ID 14)
W(S) "B" HEAD LUNAR		(SET PROG ID 15)
W(S) "B" HEAD YELLOW		(SET PROG ID 16)
W(S) "B" HEAD GREEN	X	(SET PROG ID 17)
E(N) "B" HEAD FLASHING RED		(SET PROG ID 18)
E(N) "B" HEAD LUNAR		(SET PROG ID 19)
E(N) "B" HEAD YELLOW		(SET PROG ID 20)
E(N) "B" HEAD GREEN		(SET PROG ID 21)
E(N) C5 APPLIT	X	(ENABLE APPLIT W(S) SIG W/LOSS OF C5)
W(S) C5 APPLIT	X	(ENABLE APPLIT E(N) SIG W/LOSS OF C5)

PLACE AN "X" IN THE BOX TO REPRESENT A SET STATE.

2W(S)-2E(N)T

NEW SHEET

Designed: 09/27/12

TIER IS PHASE 1 M.P. 239.70 TO M.P. 255.35 TO UPGRADE XING TO 4 QUAD WITH EGMS, VARIOUS C.P.'S

Rec#: WO#: 10804
IS: NBT /
/ /NST/MJF

MODIFICATION LEVEL	
O. A. LAST LEVEL CHECKED	DU
LAST LEVEL MOD THIS TYPICAL	DU
LAST LEVEL BY DESIGNER	DU
CHANGED FROM TYPICAL?	Y

rev 8/20/10 ITMLHBINTU.5

CIRCUIT MODIFICATIONS ARE NOT TO BE MADE WITHOUT AUTHORITY FROM THE OFFICE OF SIGNAL DESIGN

Date: 09/27/12
Des: NST
Chk: NBT
AFE: 10804

UNION PACIFIC RAILROAD
SHIPMAN, ILLINOIS
BACHMAN ROAD
SPRINGFIELD SUBDIVISION
Office of AVP Engineering - Signal Omaha, Nebraska

Sh.: 18
DOT 294411S
MP: 241.28
ID: CSL24128.18S

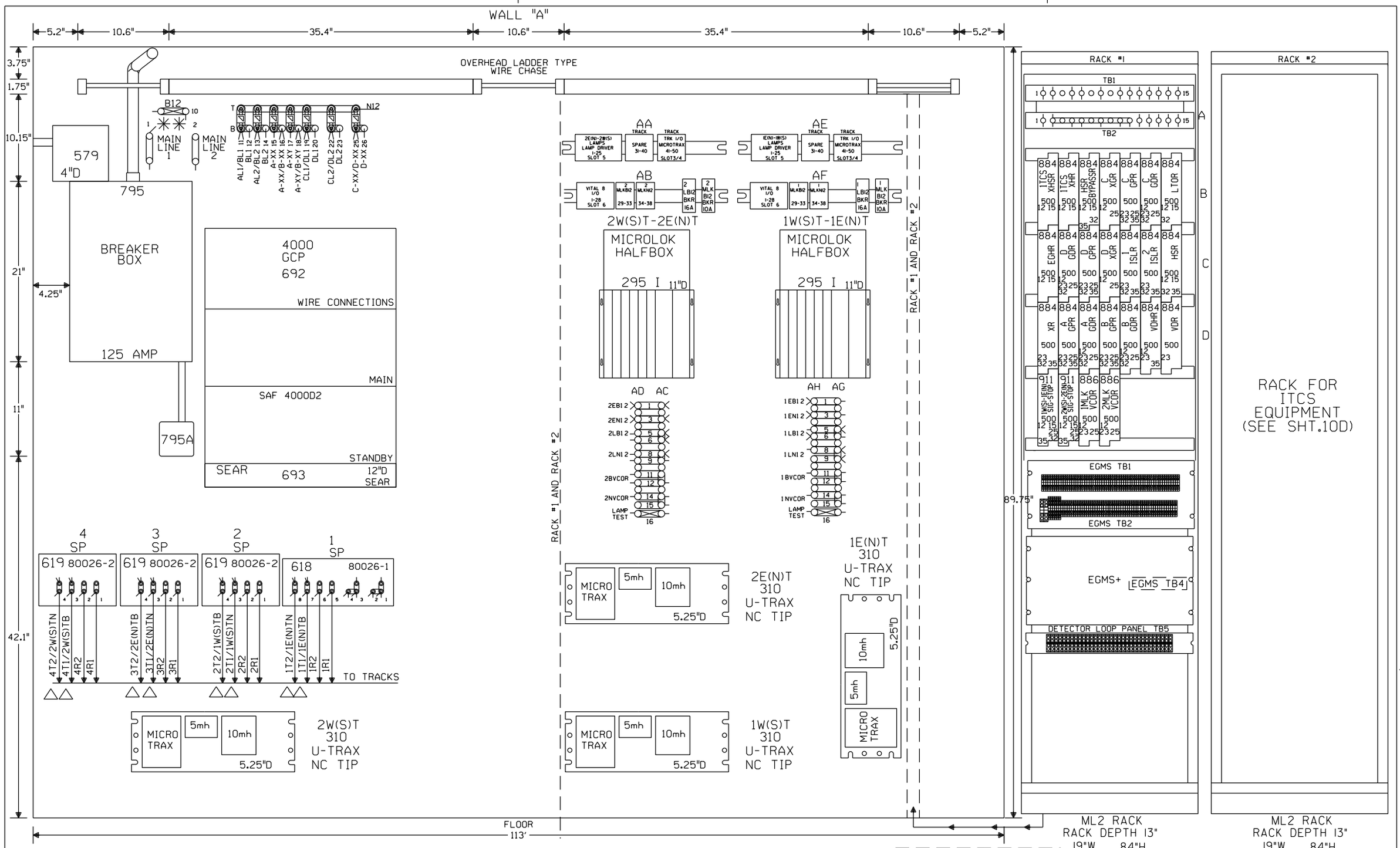

NOTE: RACK #1 & #2 ARE PERPENDICULAR TO "A" WALL

△ = FIELD VERIFY POLARITY

NOTE: ALL DIMENSIONS SHOWN ARE APPROXIMATE.

NOTE: MICROTRAX TIP PANELS MUST BE 12" APART AND 12" FROM CPU CARDS.

NOTE: PLEASE SHOW WHERE LOCATED ON OUTSIDE OF HOUSE.

✳ = STRAP TO BE REMOVED WHEN PHASE 2 IS INSTALLED.

NEW SHEET

							Designed: 09/27/12 TIER IS PHASE 1 M.P. 239.70 TO M.P. 255.35 TO UPGRADE XING TO 4 QUAD WITH EGMS, VARIOUS C.P.'S Rec#: WO#: 10804 IS: NBT/ / / NST/MJF	CIRCUIT MODIFICATIONS ARE NOT TO BE MADE WITHOUT AUTHORITY FROM THE OFFICE OF SIGNAL DESIGN	Date: 09/27/12 Des: NST Chk: NBT AFE: 10804	UNION PACIFIC RAILROAD SHIPMAN, ILLINOIS BACHMAN ROAD SPRINGFIELD SUBDIVISION Office of AVP Engineering - Signal Omaha, Nebraska	Sh.: 19 DOT 294411S MP: 241.28 ID: CSL24128.19X

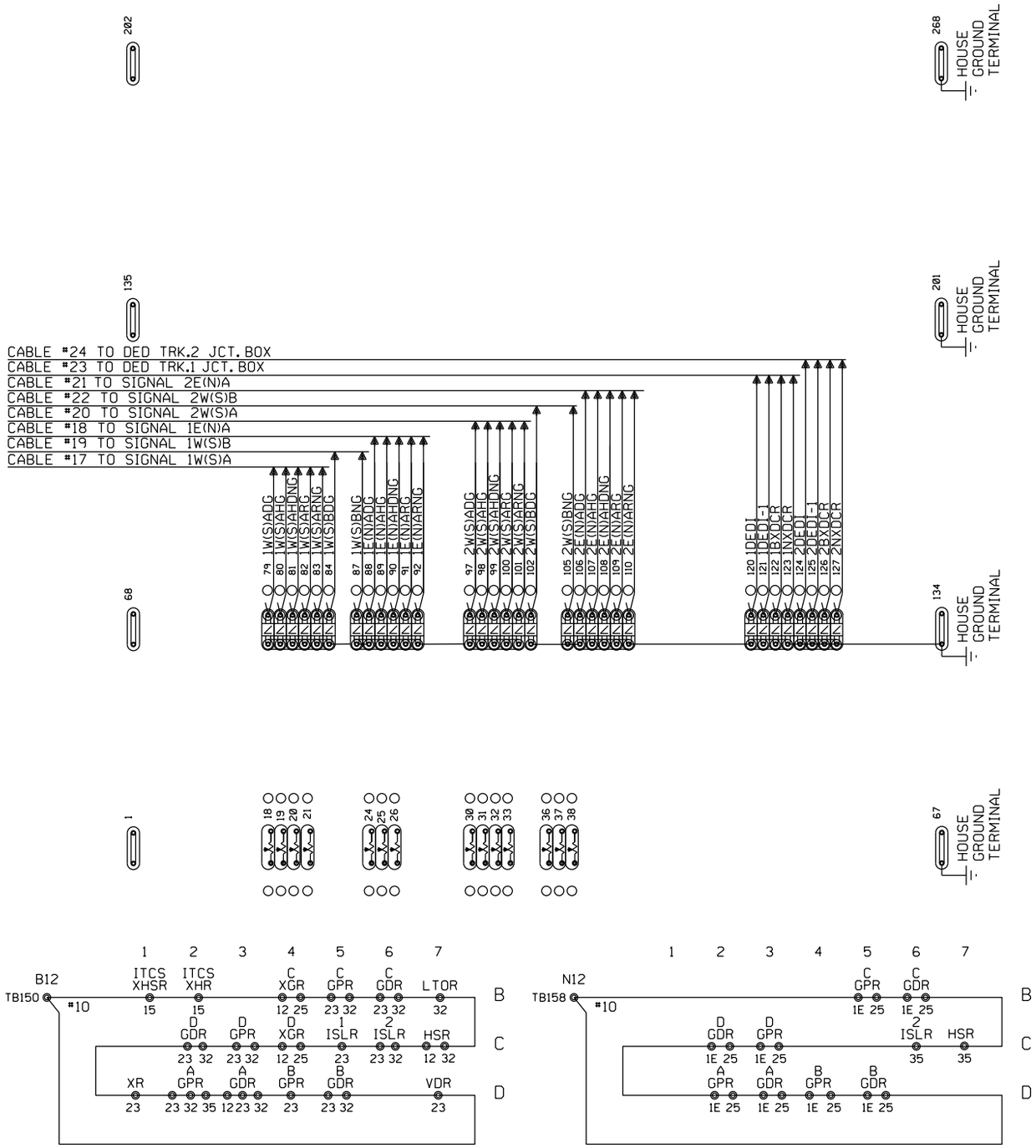

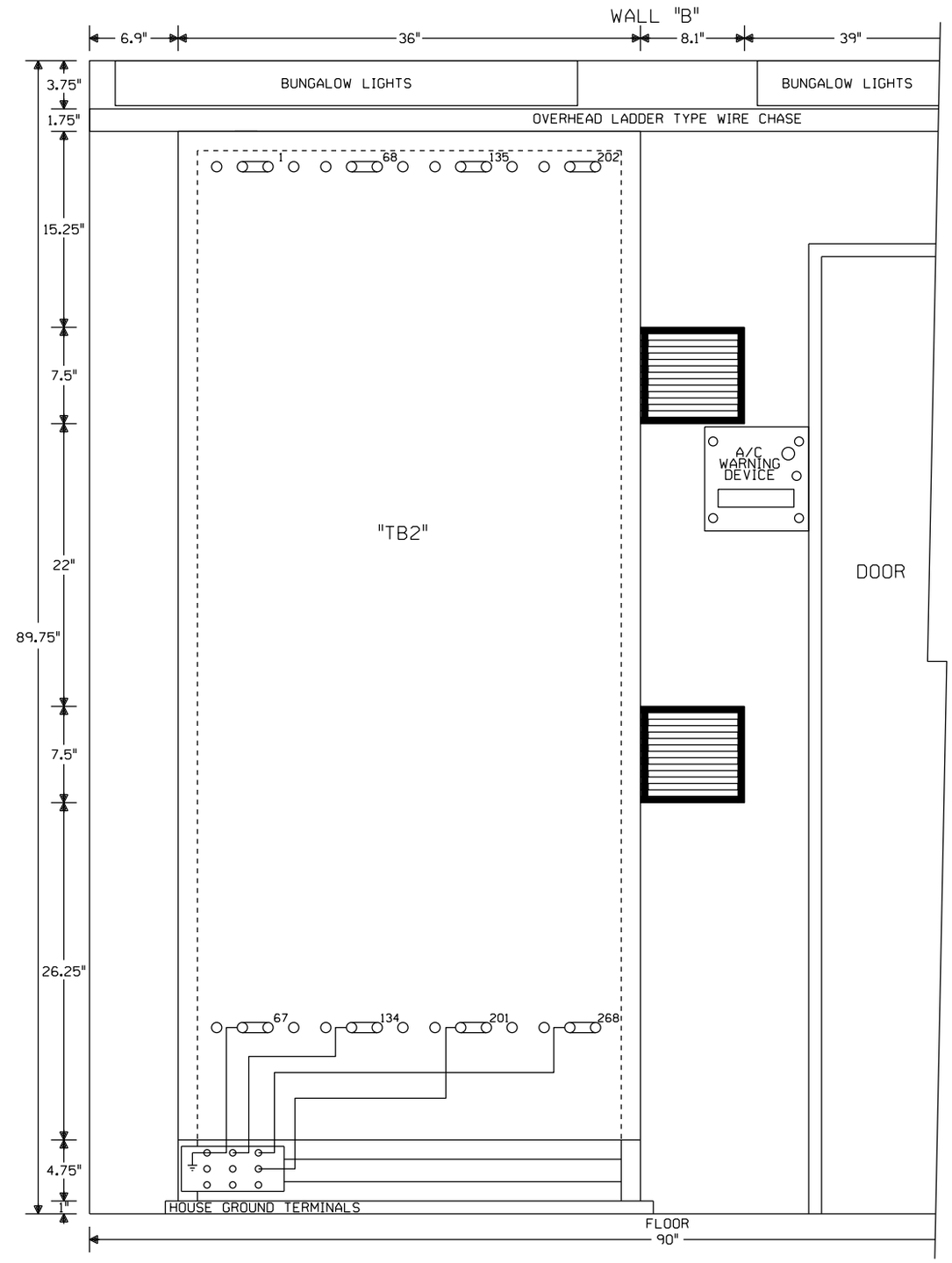

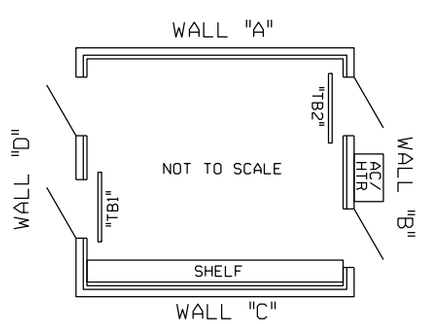

NOTE: ALL DIMENSIONS SHOWN ARE APPROXIMATE.

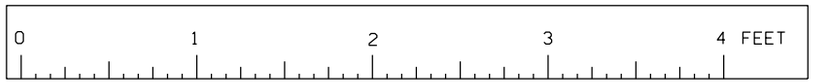

SCALE: 1.5 INCHES = 1 FOOT

NOTE: NO TEST LINKS TO BE INSTALLED WITH CROSSING LIGHTING OR GATE MECH CIRCUITRY

NEW SHEET

							Designed: 09/27/12 TIER IS PHASE I M.P. 239.70 TO M.P. 255.35 TO UPGRADE XING TO 4 QUAD WITH EGMS, VARIOUS C.P.'S Rec*: WO*: 10804 IS: NBT / / /NST/MJF	CIRCUIT MODIFICATIONS ARE NOT TO BE MADE WITHOUT AUTHORITY FROM THE OFFICE OF SIGNAL DESIGN	Date: 09/27/12 Des: NST Chk: NBT AFE: 10804	UNION PACIFIC RAILROAD SHIPMAN, ILLINOIS BACHMAN ROAD SPRINGFIELD SUBDIVISION Office of AVP Engineering - Signal Omaha, Nebraska	Sh.: 20 DOT 294411S MP: 241.28 ID: CSL24128.20X

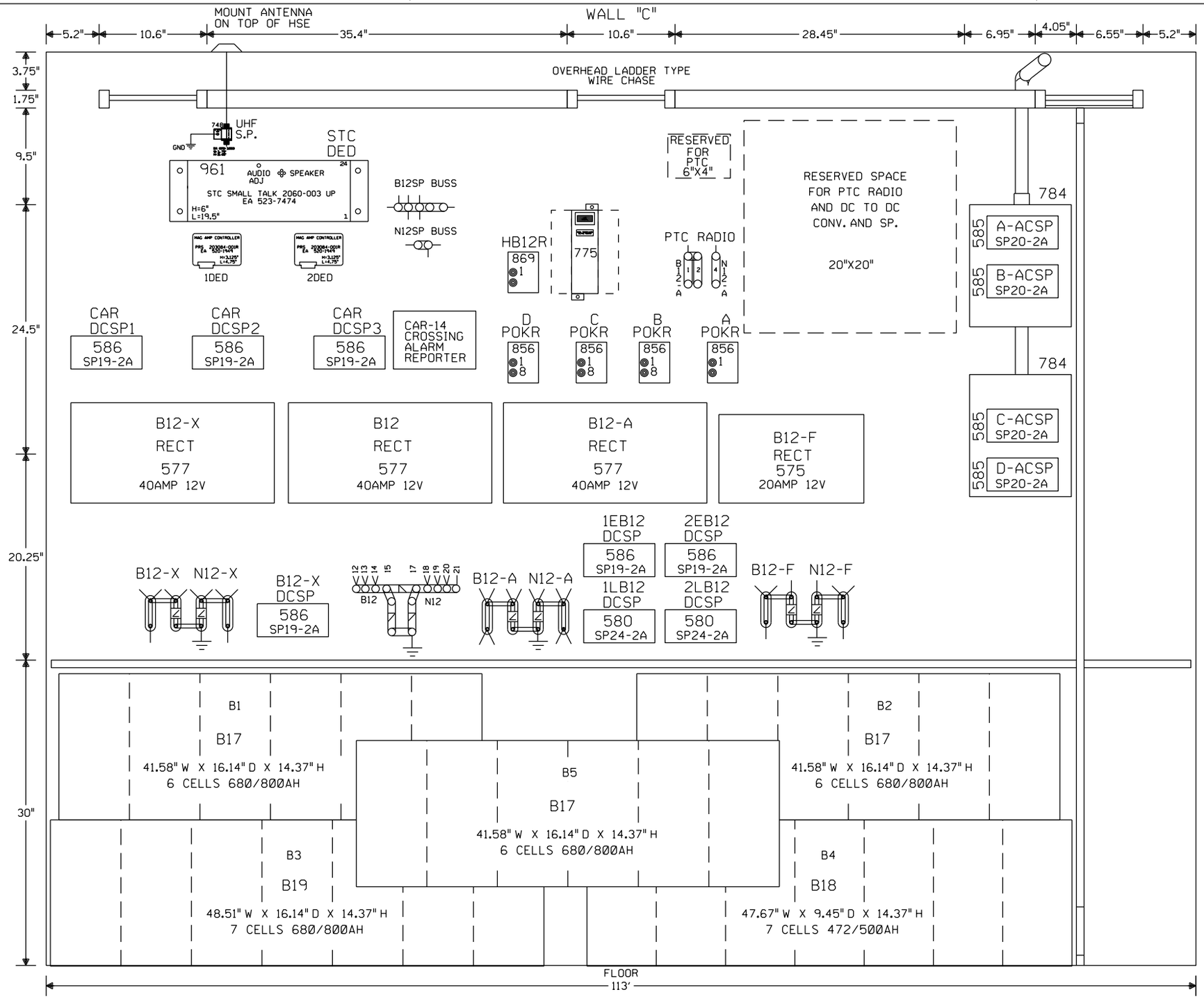

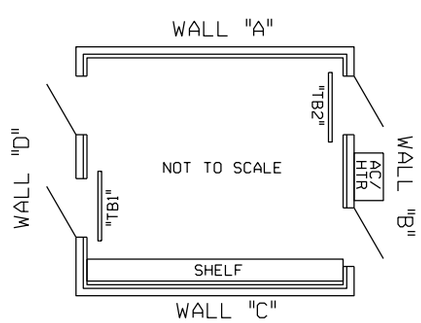

NOTE: ALL DIMENSIONS SHOWN ARE APPROXIMATE.

0 1 2 3 4 FEET

SCALE: 1.5 INCHES = 1 FOOT

NEW SHEET

Designed: 09/27/12
TIER 1S PHASE 1 M.P. 239.70 TO M.P. 255.35 TO UPGRADE XING TO 4 QUAD WITH EOMS, VARIOUS C.P.'S
Rec'd: WO#: 10804
IS: NBT, / / NST/MJF

CIRCUIT MODIFICATIONS ARE NOT TO BE MADE WITHOUT AUTHORITY FROM THE OFFICE OF SIGNAL DESIGN

Date:	09/27/12
Des:	NST
Chk:	NBT
AFE:	10804

UNION PACIFIC RAILROAD

SHIPMAN, ILLINOIS
BACHMAN ROAD
SPRINGFIELD SUBDIVISION

Office of AVP Engineering - Signal — Omaha, Nebraska

Sh.:	21
DOT	294411S
MP:	241.28
ID:	CSL24128.21X

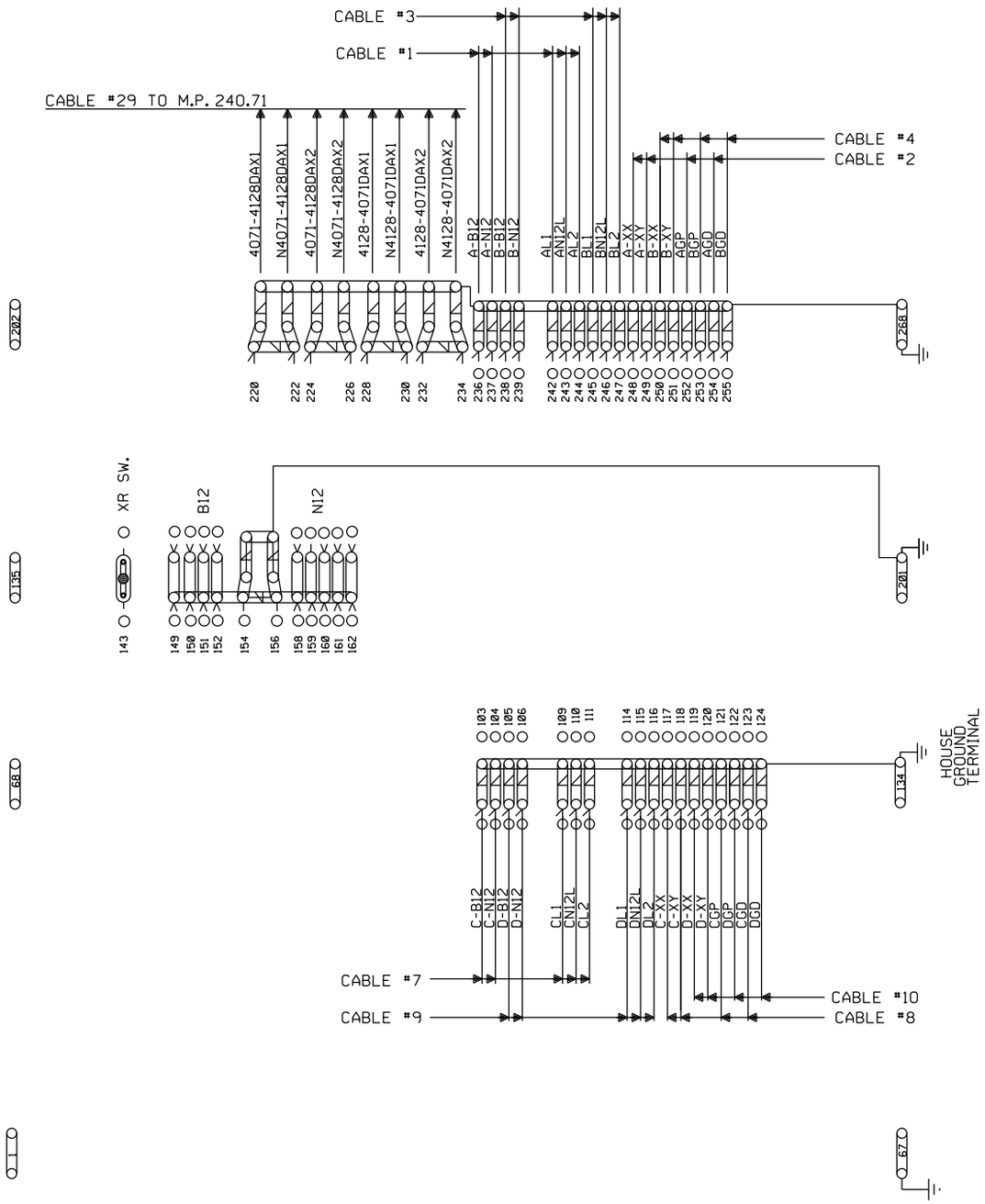

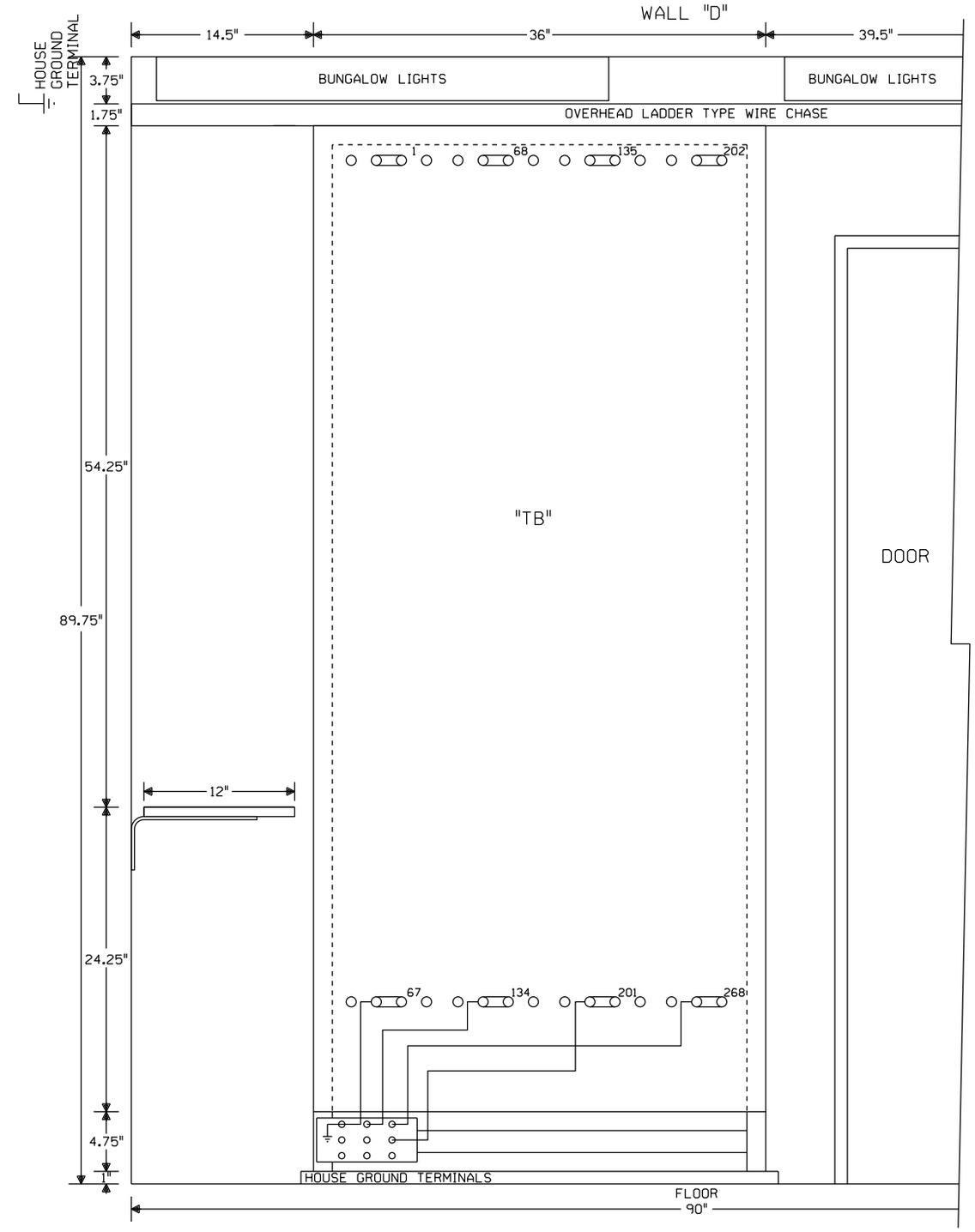

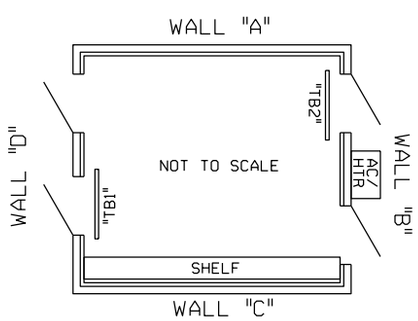

NOTE: ALL DIMENSIONS SHOWN ARE APPROXIMATE.

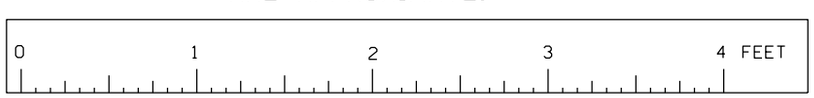

SCALE: 1.5 INCHES = 1 FOOT

NOTE: NO TEST LINKS TO BE INSTALLED WITH CROSSING LIGHTING OR GATE MECH CIRCUITRY

SEE SIGNAL STANDARD DRAWING 846120UP FOR HOUSE GROUNDING SCHEME

NEW SHEET

Designed: 09/27/12
TIER IS PHASE 1 M.P. 239.70 TO M.P. 255.35 TO UPGRADE XING TO 4 QUAD WITH EGMS, VARIOUS C.P.'S
Rec*: NBT
WO*: 10804
IS: NST/MJF

CIRCUIT MODIFICATIONS ARE NOT TO BE MADE WITHOUT AUTHORITY FROM THE OFFICE OF SIGNAL DESIGN

Date:	09/27/12
Des:	NST
Chk:	NBT
AFE:	10804

UNION PACIFIC RAILROAD

SHIPMAN, ILLINOIS
BACHMAN ROAD
SPRINGFIELD SUBDIVISION

Office of AVP Engineering - Signal — Omaha, Nebraska

Sh.:	22
DOT	294411S
MP:	241.28
ID:	CSL24128.22X

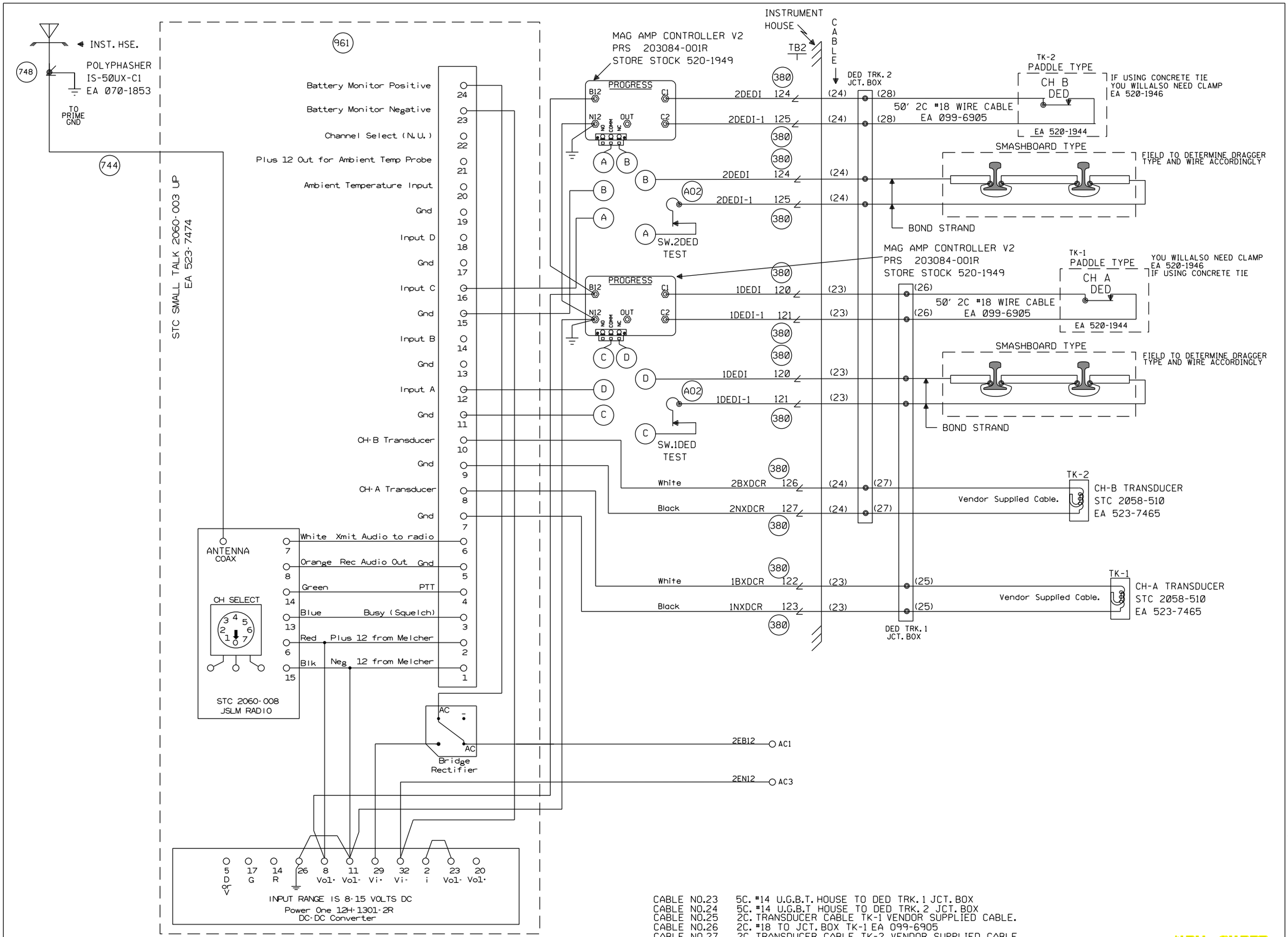

CABLE NO.23 5C. #14 U.G.B.T. HOUSE TO DED TRK. 1 JCT. BOX
CABLE NO.24 5C. #14 U.G.B.T HOUSE TO DED TRK. 2 JCT. BOX
CABLE NO.25 2C. TRANSDUCER CABLE TK-1 VENDOR SUPPLIED CABLE.
CABLE NO.26 2C. #18 TO JCT. BOX TK-1 EA 099-6905
CABLE NO.27 2C. TRANSDUCER CABLE TK-2 VENDOR SUPPLIED CABLE.
CABLE NO.28 2C. #18 TO JCT. BOX TK-2 EA 099-6905

NEW SHEET

Designed: 09/27/12
TIER 1S PHASE 1 M.P. 239.70 TO M.P. 255.35 TO UPGRADE XING TO 4 QUAD WITH EGMS, VARIOUS C.P.'S
Rec#: WO#: 10804
IS: NBT / / /NST/MJF

MODIFICATION LEVEL	
O.A. LAST LEVEL CHECKED	DU
LAST LEVEL MOD THIS TYPICAL	DU
LAST LEVEL BY DESIGNER	DU
CHANGED FROM TYPICAL?	Y

REV 8/20/10 1TMLHBINTU.7

CIRCUIT MODIFICATIONS ARE NOT TO BE MADE WITHOUT AUTHORITY FROM THE OFFICE OF SIGNAL DESIGN

Date: 09/27/12
Des: NST
Chk: NBT
AFE: 10804

UNION PACIFIC RAILROAD
SHIPMAN, ILLINOIS
BACHMAN ROAD
SPRINGFIELD SUBDIVISION
Office of AVP Engineering - Signal Omaha, Nebraska

Sh.: 23
DOT 294411S
MP: 241.28
ID: CSL24128.23S

Minimum Program Steps Report

Location and SIN

DOT Number: 294411S
Milepost Number: 241.28
Site Name: SHIPMAN, IL

SIN: 762010010016 *

* Parameter is part of office check number calculation.

MCF and Template Selection

MCF Name: GCP-T6X-02-6.mcf
MCF Revision: 26
MCFCRC: 494D2656

Template = 1D:3 Uni pairs (OCCN) *

* Parameter is part of office check number calculation.

Minimum Program Steps

MS4000 configuration
Track 1 : GCP Frequency = 114 Hz (OCCN,TCN) (Hidden) *
Track 1 : Prime UAX = IP (OCCN) (Hidden) *
Track 1 : Prime UAX Pickup = 15 sec (OCCN) (Hidden) *
Track 1 : Isl Frequency = 3.24 kHz (OCCN) (Hidden) *
Track 1 : Pickup Delay (2s +) = 2 sec (OCCN) (Hidden) *
IN 1.1 = T1 Prime UAX (OCCN) (Hidden) *
IN 1.2 = Out Of Service IP 1 (OCCN) (Hidden) *

MS4000 Predictor
Track 1 : Prime Warning Time = 40 sec (OCCN) (Hidden) *

BASIC: module configuration
Track 3/PSO 2 Slot = Track (OCCN) *
Track 4/PSO 3 Slot = Track (OCCN) *
Track 5/RIO 2 Slot = RIO (OCCN) *

PREDICTORS: track 2
Track 2 : Dax A Used = Yes (OCCN) *

PREDICTORS: track 4
Track 4 : Dax A Used = Yes (OCCN) *

GCP: track 1
Track 1 : GCP Frequency = 114 Hz (OCCN,TCN) *
Track 1 : Approach Distance = 3026 ft (OCCN,TCN) *
Track 1 : Island Distance = 133 ft (Set in Field,TCN)

GCP: track 1 prime
Track 1 : Prime Warning Time = 40 sec (OCCN) *
Track 1 : Prime UAX = IP (OCCN) *
Track 1 : Prime UAX Pickup = 15 sec (OCCN) *

GCP: track 2
Track 2 : GCP Frequency = 86 Hz (OCCN,TCN) *
Track 2 : Approach Distance = 5216 ft (OCCN,TCN) *

GCP: track 2 prime
Track 2 : Prime Warning Time = 40 sec (OCCN) *

GCP: track 2 Dax A
Track 2 : Dax A Warning Time = 45 sec (OCCN) *
Track 2 : Dax A Offset Distance = 3032 ft (OCCN) *

GCP: track 3
Track 3 : GCP Frequency = 114 Hz (OCCN,TCN) *
Track 3 : Approach Distance = 3026 ft (OCCN,TCN) *
Track 3 : Island Distance = 133 ft (Set in Field,TCN)

GCP: track 3 prime
Track 3 : Prime Warning Time = 40 sec (OCCN) *
Track 3 : Prime UAX = IP (OCCN) *
Track 3 : Prime UAX Pickup = 15 sec (OCCN) *

GCP: track 4
Track 4 : GCP Frequency = 86 Hz (OCCN,TCN) *
Track 4 : Approach Distance = 5216 ft (OCCN,TCN) *

GCP: track 4 prime
Track 4 : Prime Warning Time = 40 sec (OCCN) *

GCP: track 4 Dax A
Track 4 : Dax A Warning Time = 45 sec (OCCN) *
Track 4 : Dax A Offset Distance = 3032 ft (OCCN) *

ISLAND: track 1
Track 1 : Isl Frequency = 3.24 kHz (OCCN) *
Track 1 : Pickup Delay (2s +) = 2 sec (OCCN) *

ISLAND: track 3
Track 3 : Isl Frequency = 4.0 kHz (OCCN) *
Track 3 : Pickup Delay (2s +) = 2 sec (OCCN) *

AND: track Anding
AND 2 Used = Yes (OCCN) *
AND 3 Used = Yes (OCCN) *

AND: AND 1 XR
AND 1 Enable Used = Yes (OCCN) *

AND: AND 2
AND 2 Track 1 = Prime (OCCN) *

AND 2 Track 2 = Prime (OCCN) *

AND: AND 3
AND 3 Track 3 = Prime (OCCN) *
AND 3 Track 4 = Prime (OCCN) *

ADVANCED: out of service
OOS Control = OOS IPs (OCCN) *

ADVANCED: out of service 2
T2 OOS Control = OOS Input 1 (OCCN) *
T3 OOS Control = OOS Input 2 (OCCN) *
T4 OOS Control = OOS Input 2 (OCCN) *

SSCC: 2
SSCC-2 Number of GPs = 2 (OCCN) *
SSCC-2 Number of GDs = 2 (OCCN) *

OUTPUT: assignment page 1
OUT 1.1 = AND 1 XR (OCCN) *
OUT 1.2 = T1 Island (OCCN) *
OUT 2.1 = T2 Dax A (OCCN) *
OUT 2.2 = T3 Island (OCCN) *

OUTPUT: assignment page 2
OUT 4.1 = T4 Dax A (OCCN) *
OUT 5.1 = AND 2 (OCCN) *
OUT 5.2 = AND 3 (OCCN) *

INPUT: assignment page 1
IN 1.1 = T1 Prime UAX (OCCN) *
IN 1.2 = Out Of Service IP 1 (OCCN) *
IN 2.2 = Out Of Service IP 2 (OCCN) *
IN 3.1 = T3 Prime UAX (OCCN) *

INPUT: assignment page 2
IN 5.1 = AND 1 XR Enable (OCCN) *
IN 5.2 = GP 1.1 (OCCN) *

IO: assignment SSCC
IN 7.1 = AND 1 XR Enable (OCCN) *
IN 7.2 = GD 1.1 (OCCN) *
IN 7.4 = GD 1.2 (OCCN) *
IN 8.2 = GD 2.1 (OCCN) *
IN 8.3 = GP 2.1 (OCCN) *
IN 8.4 = GD 2.2 (OCCN) *
IN 8.5 = GP 2.2 (OCCN) *

SEAR: inputs
SP 3.1 = General 3 (OCCN) *
SP 4.1 = General 4 (OCCN) *

SEAR: slot 1-4 inputs
IN 4.1 = Vehicle Det Hlth (OCCN) *

IN 4.2 = 3 Vehicle Detect (OCCN) *

SEAR: inputs slot 5
IN 5.3 = General 1 (OCCN) *
IN 5.4 = General 2 (OCCN) *

Express: MS4000 configuration
Track 1 : GCP Frequency = 114 Hz (OCCN,TCN) (Hidden) *
Track 1 : Prime UAX = IP (OCCN) (Hidden) *
Track 1 : Prime UAX Pickup = 15 sec (OCCN) (Hidden) *
Track 1 : Pickup Delay (2s +) = 2 sec (OCCN) (Hidden) *
IN 1.1 = T1 Prime UAX (OCCN) (Hidden) *
IN 1.2 = Out Of Service IP 1 (OCCN) (Hidden) *

Express: MS4000 Predictor
Track 1 : Prime Warning Time = 40 sec (OCCN) (Hidden) *

* Parameter is part of office check number calculation.

Check Numbers

Office Check Number: 7C64AE98
Config. Check Number: 2800E600
(Based on MCF Revision 26)

Parameters not part of office check number calculation:

Track 1 : Island Distance = 133 ft (Set in Field)
Track 3 : Island Distance = 133 ft (Set in Field)

Comments

<none>

Configuration Package File

Filename: CSL24128_294411S.pac
Path: H:\UP\Springfield Sub Tier 1 Ph. 1 11-419-1\PAC Files\MP 241.28\
Date/Time: 1/12/2016 11:23:14
DT Version: 5.7.3