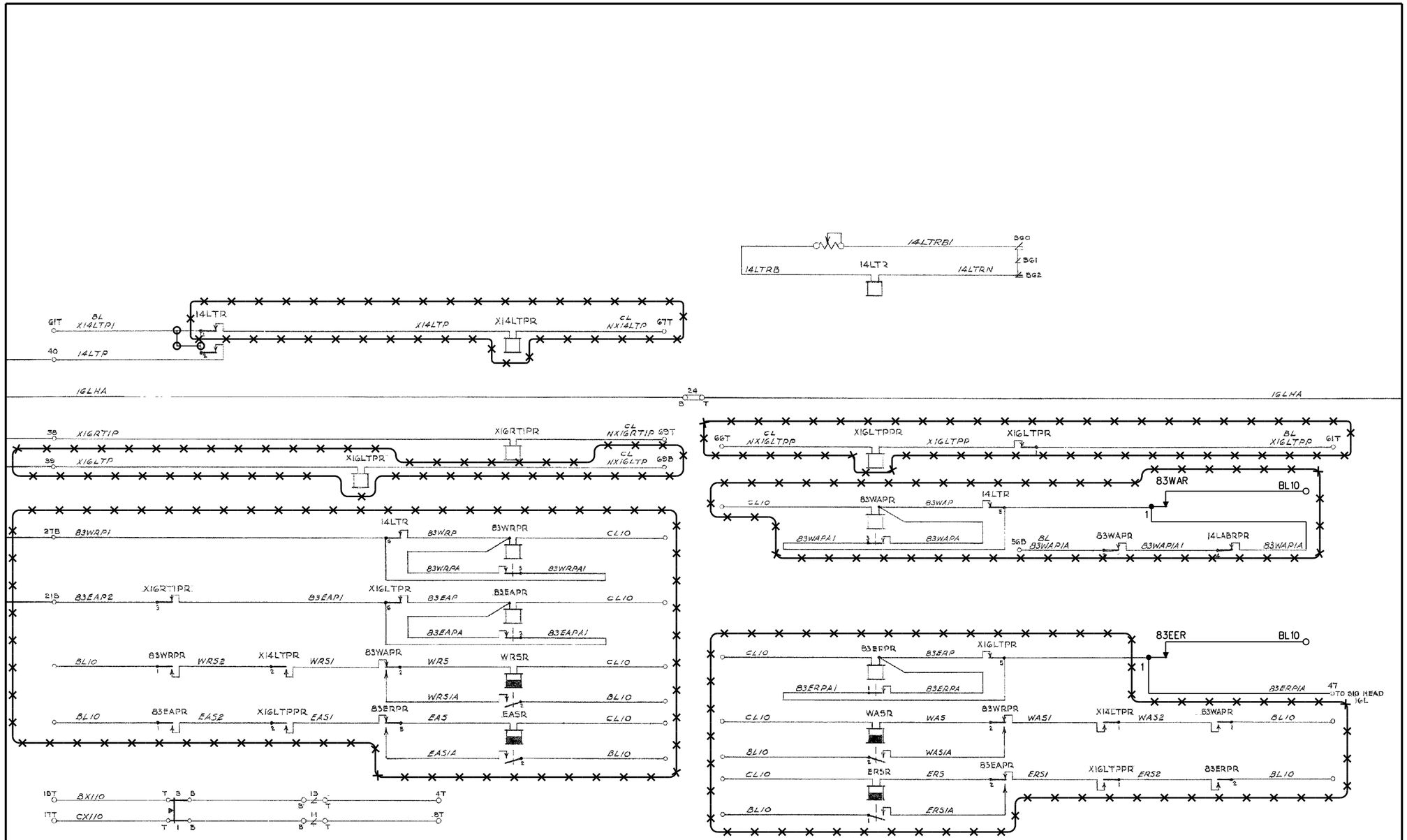

: IN

: OUT

CXV1642087 IL2015028

05-31-16 XRL/DKD/

xorail

SIGNAL CASE

CROSSING CASE - 83RD ST.

REVISIONS	
07-20-07 WAB/PWW	
09-11-08 APL/RLC	
02-11-15 XRL	IL2014050
02-03-16	IL2015033
VECTOR CREATED BY XRL	IL2014004

CSX TRANSPORTATION

RAIL TRANSPORT GROUP ENGINEERING
COMMUNICATIONS AND SIGNALS

ASHBURN INTERLOCKING

CONTROL CIRCUITS
CHICAGO, IL M.P. DG-12.80

DESIGNED	DIGITIZED	CHECKED	DATE
CSX	XRL	CSX	02-03-16

DRAWING	SHEET NO	NEXT SH	NEXT FILE	NEXT SH	FILE	SHEET
.....	.....	.....	DG01280	C20	DG01280	C19

RASTER FILE: DG01280C19.CIT MS FILE: DG01280.C19

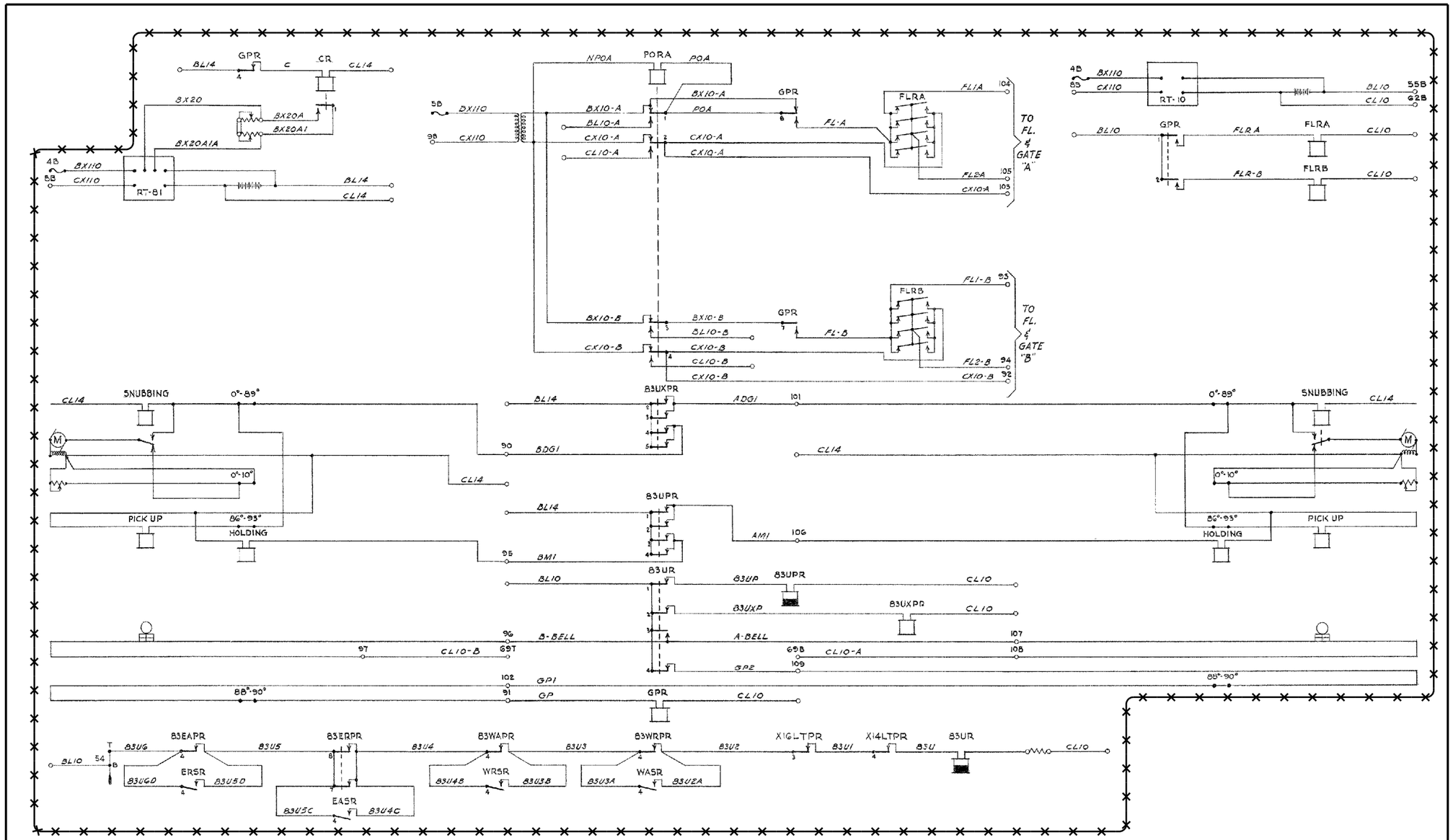

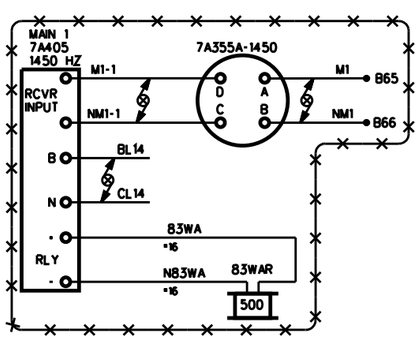

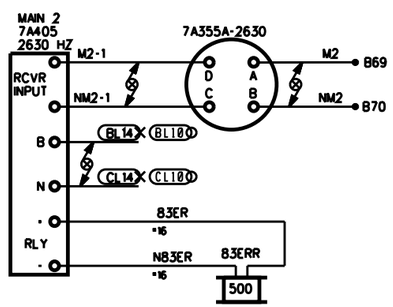

: IN
: OUT

CXV1642087
05-31-16

IL2015028
XRL/DKD/

xorail

SIGNAL CASE

CROSSING CASE - 83RD ST.

REVISIONS	
02-03-16	IL2015033
VECTOR CREATED BY XRL	IL2014004

CSX TRANSPORTATION
RAIL TRANSPORT GROUP ENGINEERING
COMMUNICATIONS AND SIGNALS

ASHBURN INTERLOCKING

CROSSING CONTROL CIRCUITS
CHICAGO, IL M.P. DG-12.80

DESIGNED	DIGITIZED	CHECKED	DATE
CSX	XRL	CSX	02-03-16

DRAWING	SHEET NO	NEXT SH	NEXT FILE	NEXT SH	FILE	SHEET
.....	.....	.....	DG01280	C21	DG01280	C20

RASTER FILE, DG01280C20.CIT MS FILE, DG01280.C20

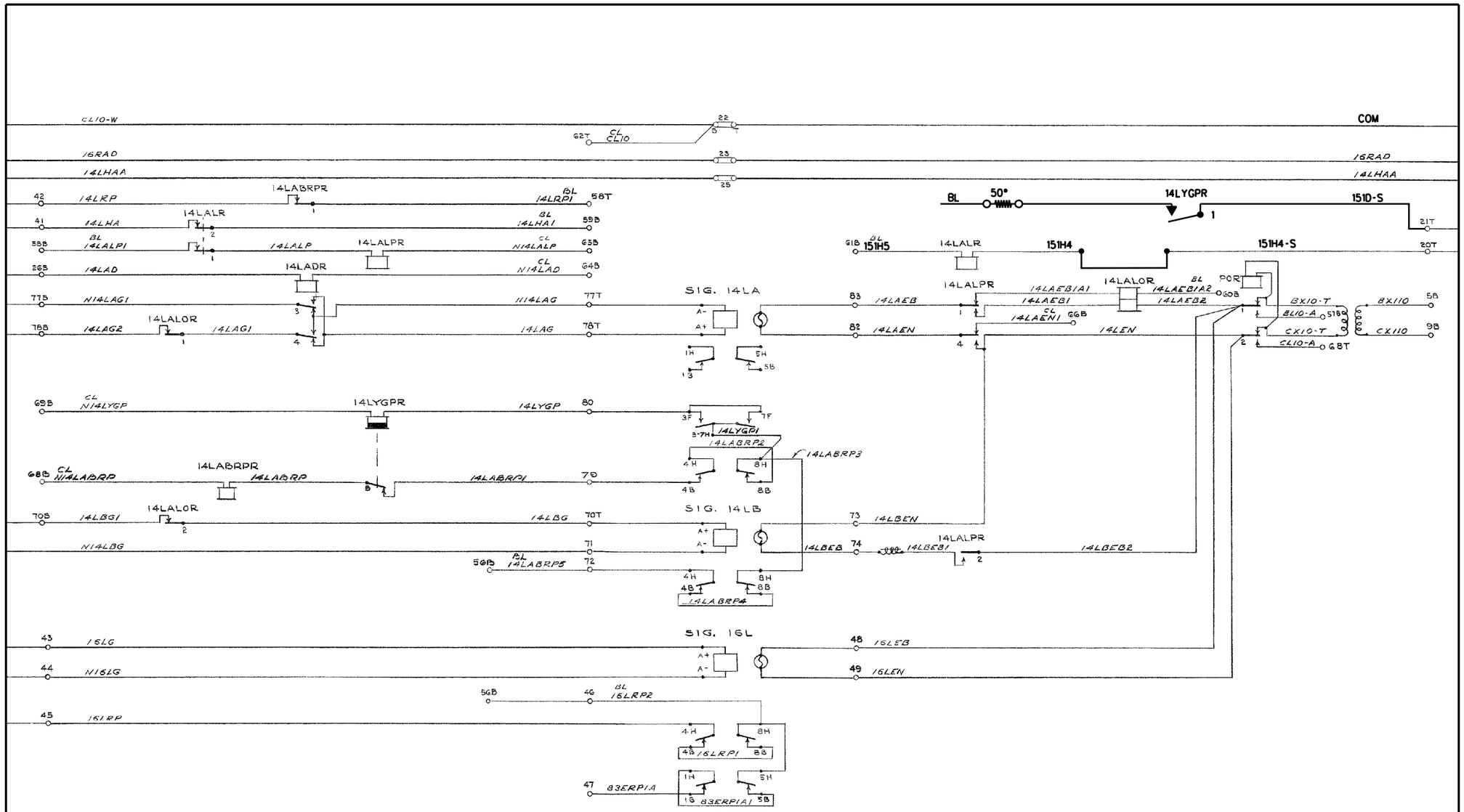

SIGNAL CASE

CROSSING CASE - 83RD ST.

: IN

: OUT

CXV1642087 IL2015028

05-31-16 XRL/DKD/

xorail

REVISIONS	
07-20-07 MAB/PWW	
09-11-08 APL/RLC	
02-03-16 VECTOR CREATED BY XRL	IL2015033 IL2014004

CSX TRANSPORTATION

RAIL TRANSPORT GROUP ENGINEERING
COMMUNICATIONS AND SIGNALS

ASHBURN INTERLOCKING

SIGNAL CIRCUITS

CHICAGO, IL M.P. DG-12.80

DESIGNED	DIGITIZED	CHECKED	DATE
CSX	XRL	CSX	02-03-16

DRAWING	SHEET NO	NEXT SH	NEXT FILE	NEXT SH	FILE	SHEET
.....	.....	.....	DG01280	C22	DG01280	C21

RASTER FILE: DG01280C21.CIT MS FILE: DG01280.C21

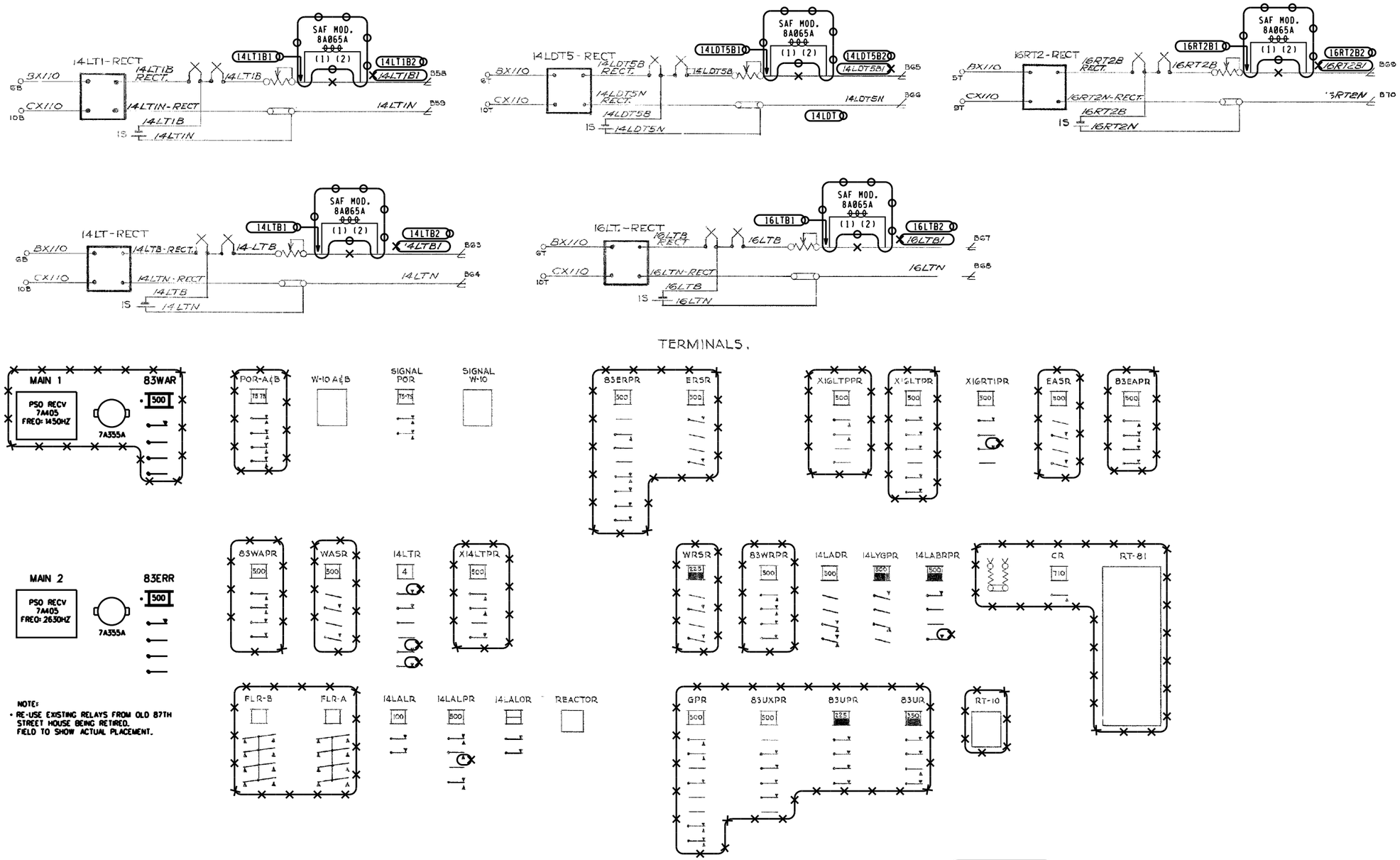

REVISIONS	
07-20-07 MAB/PWW	
09-11-08 APL/RLC	
02-03-16 VECTOR CREATED BY XRL	IL2015033 IL2014004

CSX TRANSPORTATION
RAIL TRANSPORT GROUP ENGINEERING
COMMUNICATIONS AND SIGNALS

ASHBURN INTERLOCKING

RELAY LAYOUT
CHICAGO, IL M.P. DG-12.80

DESIGNED	DIGITIZED	CHECKED	DATE
CSX	XRL	CSX	02-03-16

DRAWING	SHEET NO	NEXT SH	NEXT FILE	NEXT SH	FILE	SHEET
.....	.....	.....	DG01280	C23	DG01280	C22

RASTER FILE: DG01280C22.CIT MS FILE: DG01280.C22

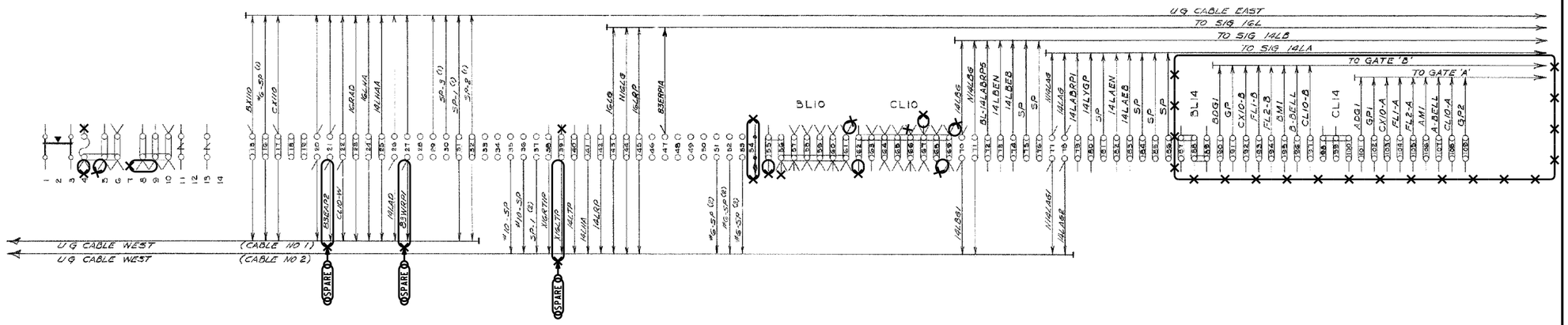

RELAYS

ROW-B

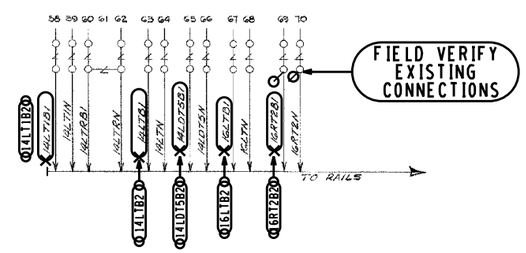

SIGNAL CASE

CROSSING CASE - 83RD ST.

: NOTE
: IN
: OUT

CXV1642087 IL2015028
05-31-16 XRL/DKD/

xorail

REVISIONS	
07-20-07 MAB/PWW	
02-03-16 VECTOR CREATED BY XRL	IL2015033 IL2014004

CSX TRANSPORTATION
RAIL TRANSPORT GROUP ENGINEERING
COMMUNICATIONS AND SIGNALS

ASHBURN INTERLOCKING

TERMINAL LAYOUT
CHICAGO, IL M.P. DG-12.80

DESIGNED	DIGITIZED	CHECKED	DATE
CSX	XRL	CSX	02-03-16

DRAWING	SHEET NO	NEXT SH	NEXT FILE	NEXT SH	FILE	SHEET
.....	.....	.....	.....	.....	DG01280	C23

RASTER FILE: DG01280C23.CIT MS FILE: DG01280.C23

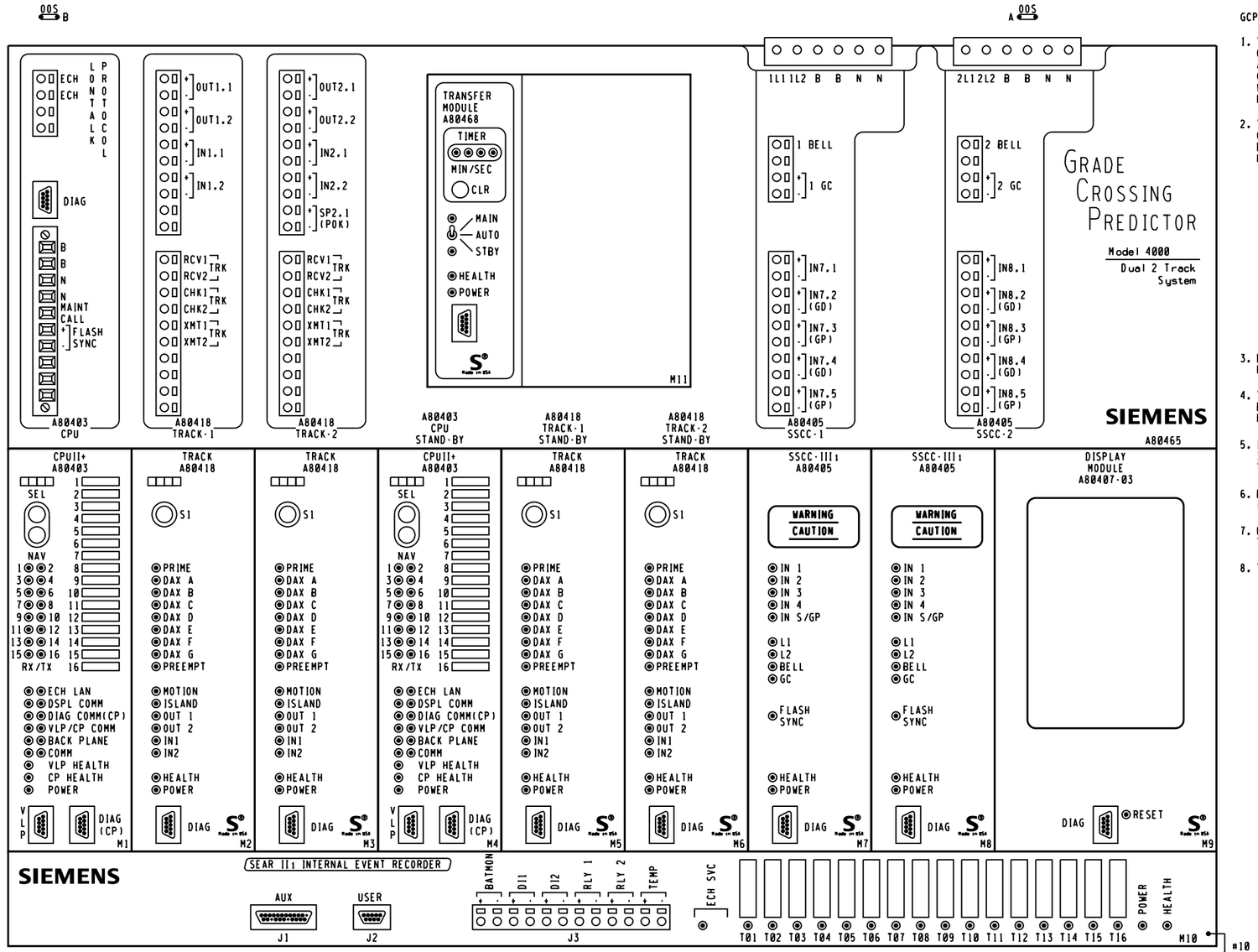

DIMENSIONS 23.25"W X 22.15"H X 12.38"D

GCP 4000 APPLICATION NOTES.

1. THE GRADE CROSSING PREDICTOR (GCP) IS A MODULAR MICROPROCESSOR CONTROLLED SYSTEM THAT IS DEPLOYED TO CONTINUALLY MONITOR THE APPROACHES TO RAILROAD GRADE CROSSINGS AND TO CONTROL THE LAMPS, GATES AND BELLS ASSOCIATED WITH THOSE CROSSINGS. WHEN EQUIPPED WITH THE SEAR II1 MODULE THE GCP 4000 WILL RECORD EVENTS AND REPORT ALARMS WHEN CONNECTED TO AN OFFICE SYSTEM.

2. THE GCP 4000 GCP (A80465) IS A TWO TRACK REDUNDANT UNIT CAPABLE OF DRIVING 4 INDEPENDENT FLASHER AND GATE SIGNALS AND RECORDING EVENTS AND REPORTING ALARMS. THIS A80465 INCLUDES THE FOLLOWING MODULES.

SLOT	MODULE	FUNCTION	PART NO.
M1	CPU-II+	MAIN	A80403
M2	TRACK-1	MAIN	A80418
M3	TRACK-2	MAIN	A80418
M4	CPU-II+	STANDBY	A80403
M5	TRACK-1	STANDBY	A80418
M6	TRACK-2	STANDBY	A80418
M7	SSCC-III1	A SIGNAL	A80405
M8	SSCC-III1	B SIGNAL	A80405
M9	DISPLAY MODULE		A80407-03
TOP CENTER	TRANSFER UNIT		A80468
LOWER BAY	SEAR II1	RECORDER	A80410

3. EACH TRACK MODULE HAS TWO PROGRAMMABLE INPUTS AND TWO PROGRAMMABLE OUTPUTS.

4. THE SEAR II1 INTERNAL EVENT RECORDER HAS INPUTS FOR ONE BATTERY MONITOR, TWO NON-VITAL INPUTS AND TWO PROGRAMMABLE RELAY DRIVES (HEEL/FRONT).

5. LOCATED ON THE FRONT OF EACH MODULE THERE ARE LED LIGHTS TO INDICATE THE ACTIVITY OF CERTAIN FUNCTIONS OCCURRING INSIDE THE GCP.

6. BETWEEN SLOT 1 & 2 THERE IS A CHASSIS INDENTIFICATION CHIP (CIC) SOCKET AND AN ECD CONNECTOR (DB-25 FEMALE).

7. UPON THE FAILURE OF A MODULE IN SLOTS M1-M3 THE AUTOMATIC TRANSFER UNIT SWITCHES TO THE STANDBY MODULES IN SLOTS M4-M6.

8. THE GCP 4000 GCP (A80465) MAY USE RIO MODULES IN SLOTS M3 AND M6.

NEW WORK
CXV1642087 IL2015028
05-31-16 XRL/DKD/
xorail

4000GCP.C01
REV. 09-04-15

REVISIONS						
DRAWING	SHEET NO	NEXT SH	NEXT FILE	NEXT SH	FILE	SHEET
.....	.....	.....	DG01280	C25	DG01280	C24

CSX TRANSPORTATION
RAIL TRANSPORT GROUP ENGINEERING
COMMUNICATIONS AND SIGNALS

W. 83RD PLACE 283146Y

DETECTION DEVICE CONSIST CWE-87
CHICAGO, IL M.P. DG-12.87

DESIGNED	DIGITIZED	CHECKED	DATE
XRL	XRL	XRL	05-31-16

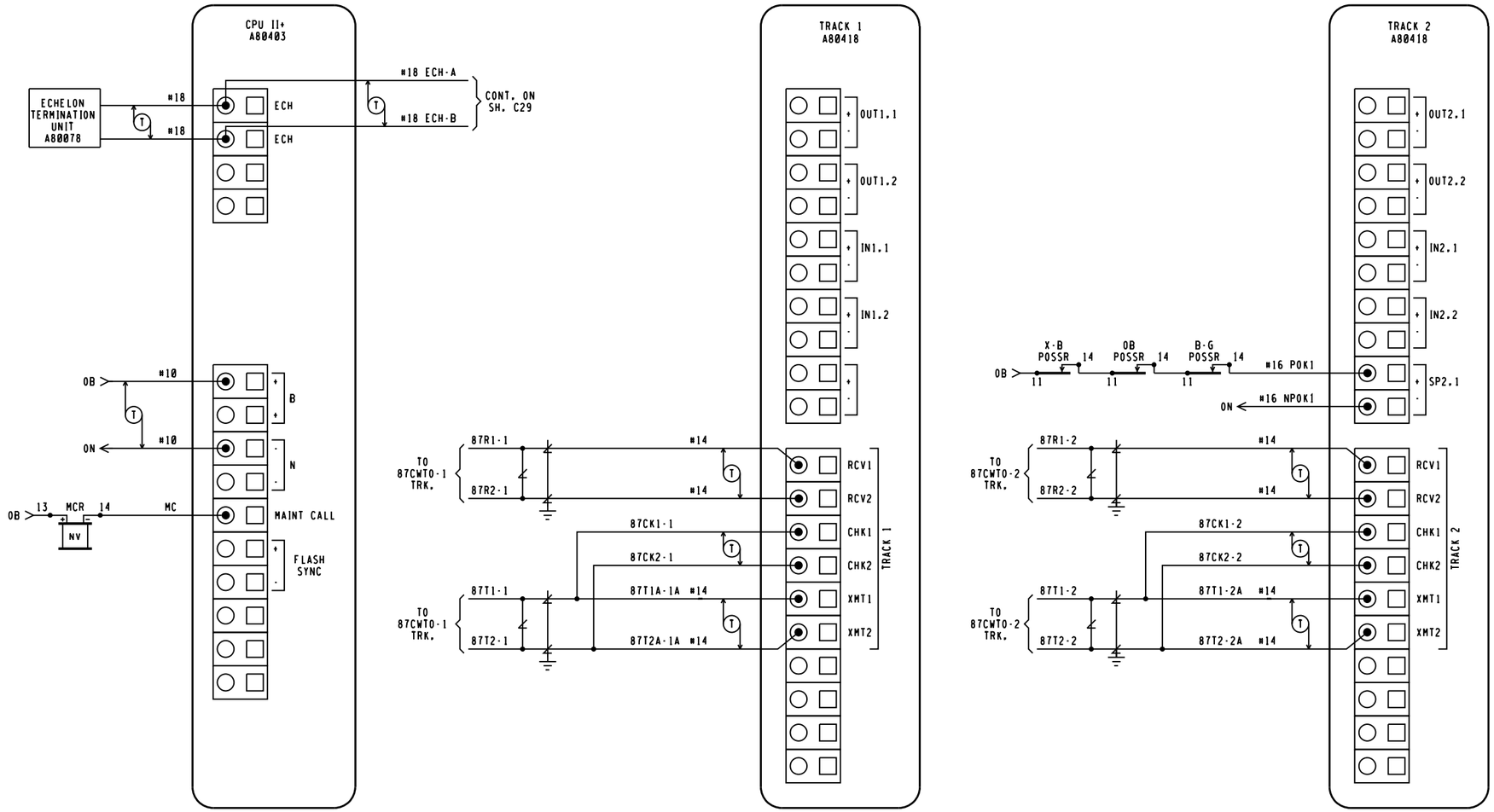

NOTE:

ECHELON CONNECTIONS NOT TO EXCEED 53' IN LENGTH AND TOTAL LENGTH COMBINED NOT TO EXCEED 430' WITH A MAXIMUM OF 8 NODES. RECOMMEND USE BELDEN WIRE CABLE #8461 OR EQUIVALENT.

NEW WORK
CXV1642087 IL2015028
05-31-16 XRL/DKD/
xorail

4000GCP.C02
REV. 09-04-15

REVISIONS						
DRAWING	SHEET NO	NEXT SH	NEXT FILE	NEXT SH	FILE	SHEET
.....	.....	.....	DG01280	C26	DG01280	C25

CSX TRANSPORTATION
RAIL TRANSPORT GROUP ENGINEERING
COMMUNICATIONS AND SIGNALS

W. 83RD PLACE 283146Y

DETECTION CIRCUITRY CWE-87
CHICAGO, IL M.P. DG-12.87

DESIGNED	DIGITIZED	CHECKED	DATE
XRL	XRL	XRL	05-31-16

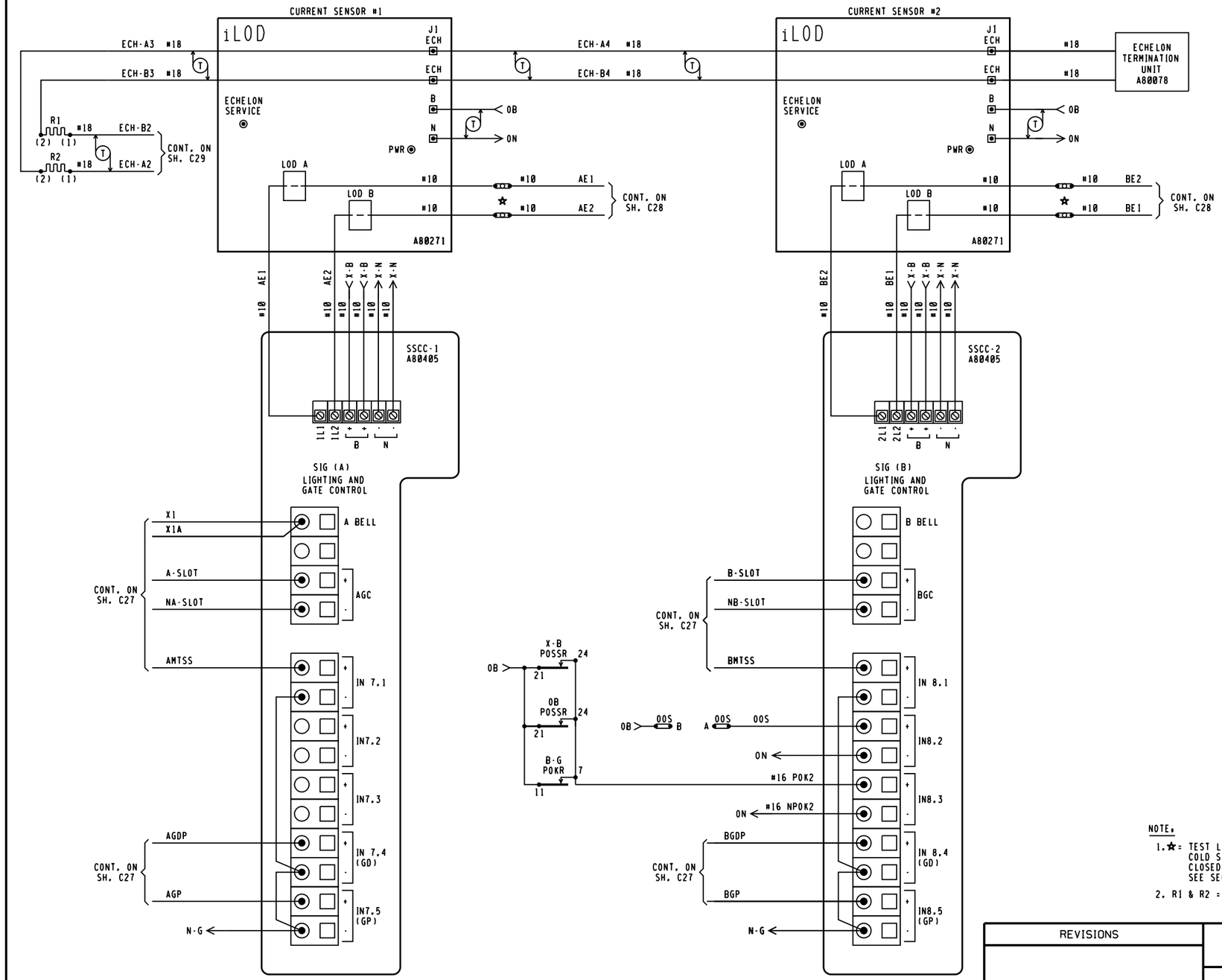

WARNING

BEFORE REMOVING A TRACK FROM SERVICE COMPLIANCE WITH TRAIN CONTROL JUMPER POLICY, TCR 1525-01, MUST BE ASSURED.

TO ENABLE THE REMOVAL OF A TRACK FROM SERVICE, APPLY A JUMPER CONNECTING 00S TERMINAL (A) TO 00S TERMINAL (B).

NOTE:

1. ★ = TEST LINKS MUST BE OPENED TEMPORARILY FOR COLD START OF REPLACEMENT SSCC MODULES AND CLOSED IN SEQUENCE WITH MFR. INSTRUCTIONS. SEE SECTION 8.8 OF 4000GCP REFERENCE MANUAL.
2. R1 & R2 = .5 WATT, 20Ω RESISTOR

NEW WORK
CXV1642087 IL2015028
05-31-16 XRL/DKD/
xorail

4000GCP.C03
REV. 09-04-15

REVISIONS	CSX TRANSPORTATION RAIL TRANSPORT GROUP ENGINEERING COMMUNICATIONS AND SIGNALS			
	W. 83RD PLACE 283146Y DETECTION CIRCUITRY CWE-87 CHICAGO, IL M.P. DG-12.87			
	DESIGNED XRL	DIGITIZED XRL	CHECKED XRL	DATE 05-31-16

DRAWING	SHEET NO	NEXT SH	NEXT FILE	NEXT SH	FILE	SHEET
.....	.....	.....	DG01280	C27	DG01280	C26

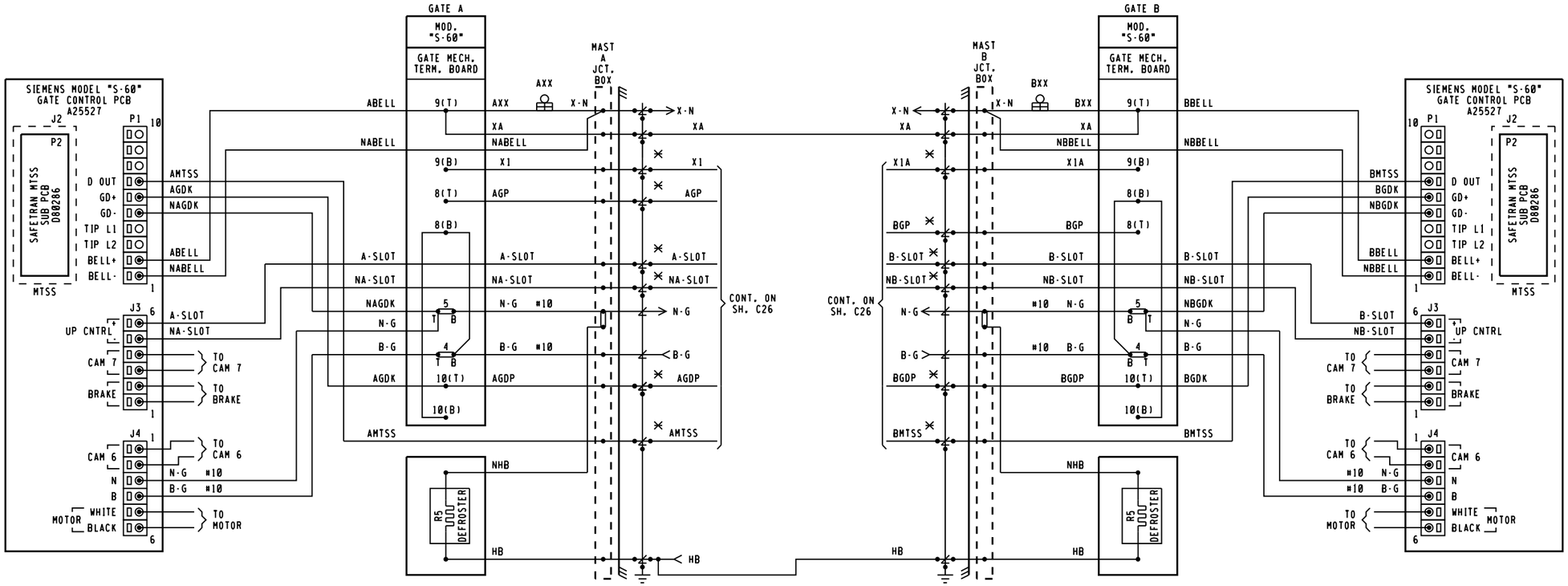

NOTES,
1. ✕ : TEST LINKS MUST BE OPEN TEMPORARILY FOR COLD START OF REPLACEMENT SSCC MODULES AND CLOSED IN SEQUENCE WITH MFR. INSTRUCTIONS. SEE SECTION 8.8 OF 4000GCP REFERENCE MANUAL.
2. —●— : TERMINAL IN JCT. BOX BASE
3. ALL WIRING #16 UNLESS NOTED OTHERWISE.

NEW WORK
CXV1642087 IL2015028
05-31-16 XRL/DKD/
xorail

4000GCP.C04
REV. 09-04-15

REVISIONS						

CSX TRANSPORTATION
RAIL TRANSPORT GROUP ENGINEERING
COMMUNICATIONS AND SIGNALS

W. 83RD PLACE 283146Y

CROSSING WARNING DEVICE GATE CIRCUITRY
CHICAGO, IL M.P. DG-12.87

DESIGNED	DIGITIZED	CHECKED	DATE
XRL	XRL	XRL	05-31-16

DRAWING	SHEET NO	NEXT SH	NEXT FILE	NEXT SH	FILE	SHEET
.....	.....	.....	DG01280	C28	DG01280	C27

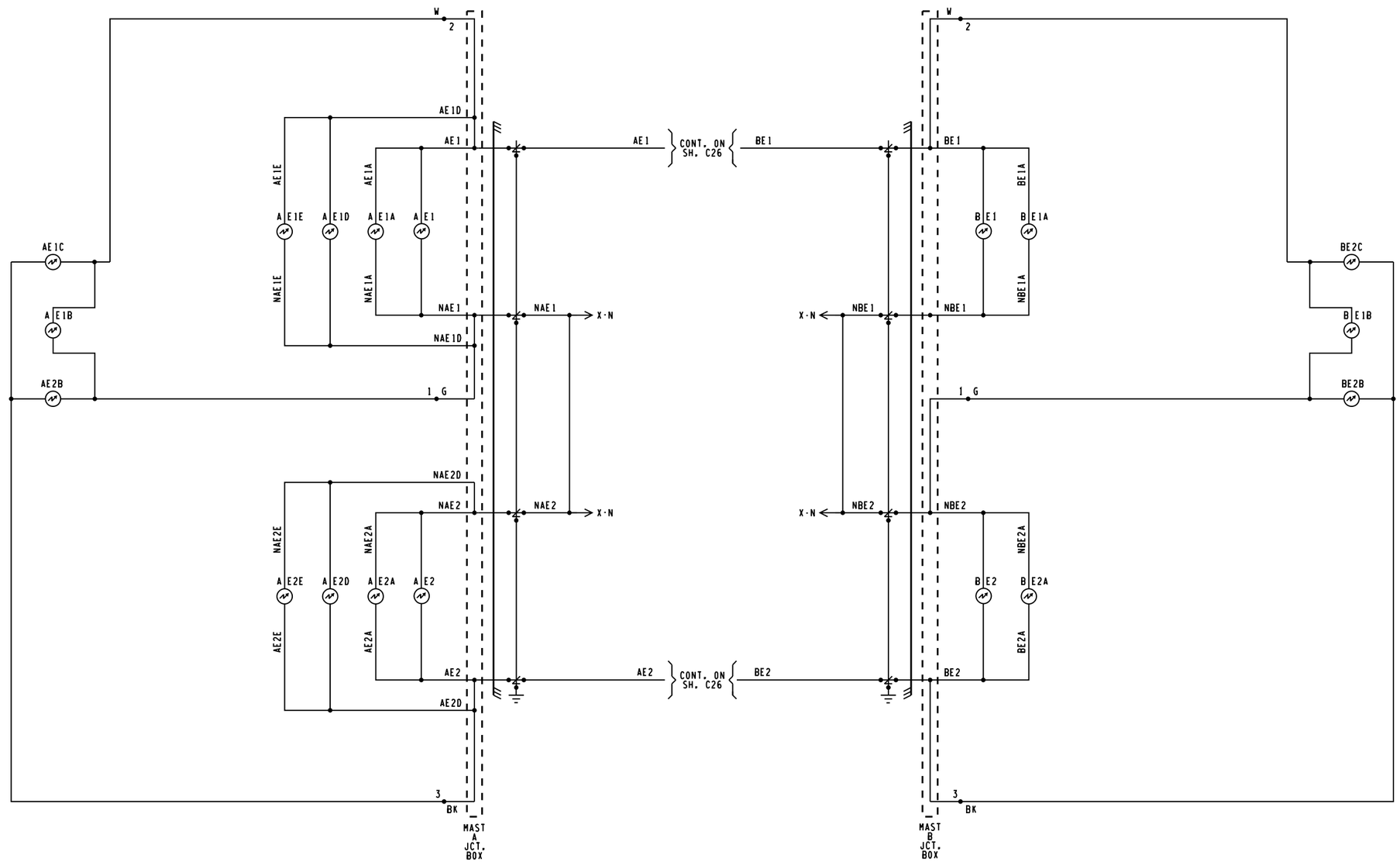

NOTES:

1. = TERMINAL IN JUNCTION BOX
2. WHEN 7 OR MORE LIGHTS ON A SINGLE STRUCTURE REFER TO SS382 FOR REQUIRED ARRESTERING
3. FEEDS TO ALL BUSSES AND LIGHT CIRCUITS ARE #10 FLEX
4. UNLESS NOTED ALL OTHER WIRING #16
5. CABLING SPECIFICATIONS SHOWN ON SH. S01

NEW WORK
CXV1642087 IL2015028
05-31-16 XRL/DKD/
xorail

4000GCP.C05
REV. 09-04-15

REVISIONS

CSX TRANSPORTATION
RAIL TRANSPORT GROUP ENGINEERING
COMMUNICATIONS AND SIGNALS

W. 83RD PLACE 283146Y

CROSSING WARNING DEVICE LIGHT CIRCUITRY
CHICAGO, IL M.P. DG-12.87

DESIGNED	DIGITIZED	CHECKED	DATE
XRL	XRL	XRL	05-31-16

DRAWING	SHEET NO	NEXT SH	NEXT FILE	NEXT SH	FILE	SHEET
.....	.....	.....	DG01280	C29	DG01280	C28

WAYSIDE ACCESS GATEWAY CONFIGURATION	
SITE ATCS ADDRESS	7.125.308.015.07.01 7.125.LLL.GGG.SS.DD
SERIAL INTERFACE	38,400,NONE,8,1/NOFLOW
SERIAL FORMAT	RAW
WAG TEST MODE	DISABLED
ECHELON ADDRESS	01.07
UDP PORTS	5000, 5001, 5002, 5003
ROUTE TABLE EXPIRY	5400 SEC
BROADCAST MEDIUM	IP ETHERNET
TCP PORTS	23, 10023, 6001, 6002
DHCP SERVER	DISABLED
IP ADDRESS	192.168.13.1
TYPE 7 ROUTE LENGTH	12--7RRLLLGGGSS
IP NETWORK MASK	255.255.255.0
WAG CIRCUIT ID	DISABLE
ROUTING REGION DOMAIN 1	OCGSERVER1.JAX.COM
ATCS SERVER UDP PORT NUMBER	6001
TELNET NUMBERS	WAG 6002, SERIAL 10023
DEFAULT GATEWAY IP	192.168.013.031

NOTE TO INSPECTOR, AT INSTALLATION OF WAG, OR UPDATE OF THE CONFIGURATION, OR UPDATE OF THE EXECUTIVE PROGRAM, MARK-UP CONFIGURATION TABLE FOR AS IN SERVICE PLANS

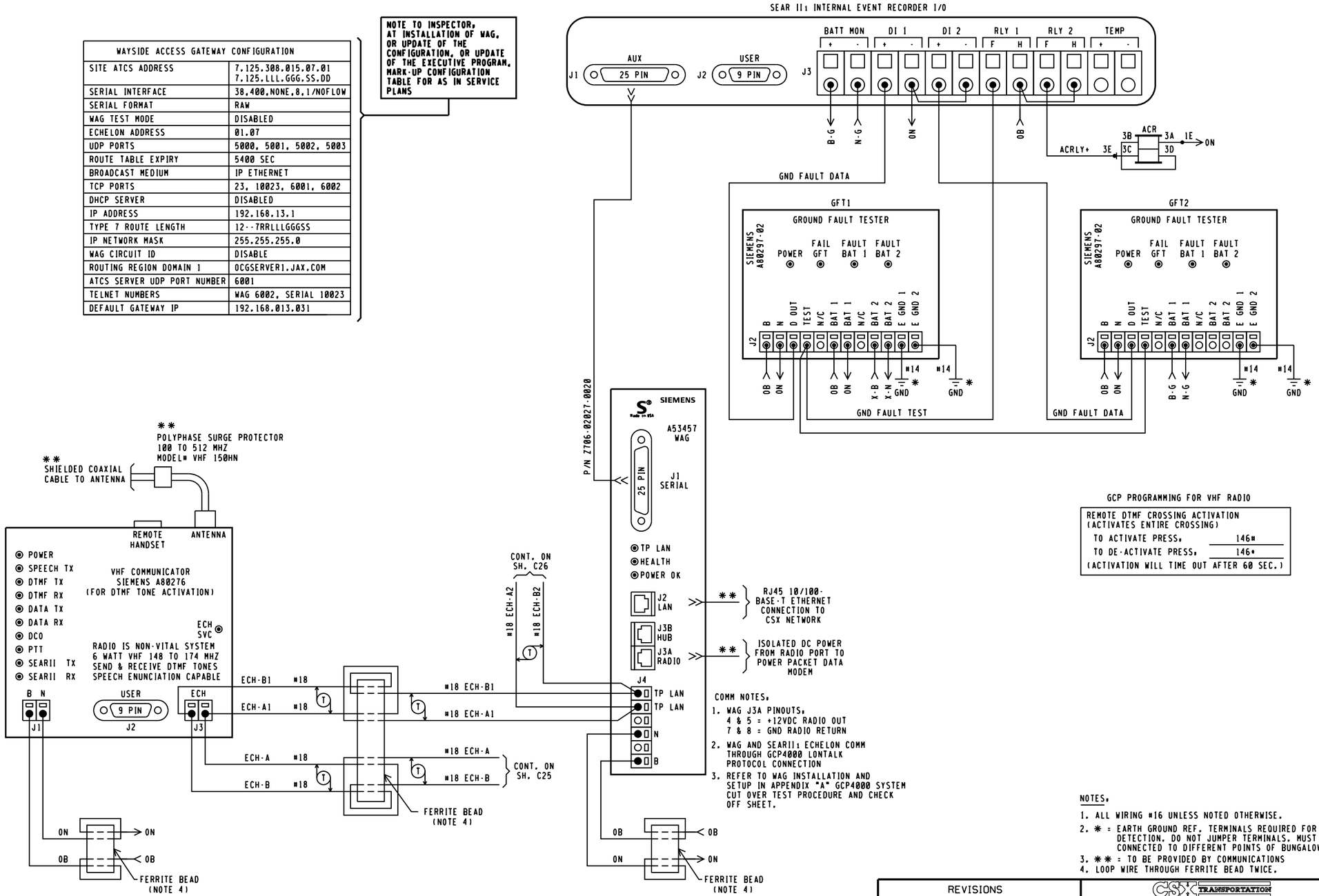

GCP PROGRAMMING FOR VHF RADIO

REMOTE DTMF CROSSING ACTIVATION (ACTIVATES ENTIRE CROSSING)	
TO ACTIVATE PRESS.	146#
TO DE-ACTIVATE PRESS.	146*
(ACTIVATION WILL TIME OUT AFTER 60 SEC.)	

NOTES.

1. ALL WIRING #16 UNLESS NOTED OTHERWISE.
2. * = EARTH GROUND REF. TERMINALS REQUIRED FOR DETECTION. DO NOT JUMPER TERMINALS. MUST BE CONNECTED TO DIFFERENT POINTS OF BUNGALOW.
3. ** = TO BE PROVIDED BY COMMUNICATIONS
4. LOOP WIRE THROUGH FERRITE BEAD TWICE.

4000GCP.C06
REV. 09-04-15

REVISIONS

CSX TRANSPORTATION
RAIL TRANSPORT GROUP ENGINEERING
COMMUNICATIONS AND SIGNALS

W. 83RD PLACE 283146Y

CROSSING WARNING DEVICE CIRCUITRY
CHICAGO, IL M.P. DG-12.87

DESIGNED	DIGITIZED	CHECKED	DATE
XRL	XRL	XRL	05-31-16

DRAWING	SHEET NO	NEXT SH	NEXT FILE	NEXT SH	FILE	SHEET
.....	.....	.....	DG01280	C30	DG01280	C29

DEFAULTS AND/OR STYLE		FIELD RECORD
SEAR II₁ EXECUTIVE PROGRAM	VERSION, 9V725A01	VERSION, _____
APPLICATION PROGRAM (IF LOADED)	VERSION, 9V864A01	VERSION, _____

NOTE TO INSPECTOR,
AT IN SERVICE OF SEAR II₁ OR UPDATE OF ITS INTERNAL EXECUTIVE PROGRAM OR ITS CSXT APPLICATION PROGRAM, NOTE THE VERSION NUMBER OF EACH PROGRAM MUST IN THE BLANK FIELDS.

SITE SET UP MENU

FUNCTION	LED DISPLAY
DATE/TIME	XX-XX-XXXX XX:XX:XX
AUTOMATIC DST ADJUSTMENT	YES
TIME ZONE	EASTERN
SITE NAME	W. 83RD PLACE
MILEPOST	DG-12.87
DOT NUMBER	283146Y
TESTER TYPE	CROSSING
DATE FORMAT	MM-DD-YYYY
TEMP FORMAT	FAHRENHEIT
INDICATE HOLD (SEC)	0
INDICATE REFRESH (SEC)	60
SITE ATCS ADDRESS	7.125.308.015.99.01 (7.RRR.LLL.GGG.99.01)
SITE TYPE	COLLECTOR
OFFICE ADDRESS	2.125.00.0000 (2.RRR.NN.DDDD)
POLL ID	1
MODE	GEN/ATCS
WAMS XID	DISABLED
OFFICE COMM. DEVICE	■WAG (ECHELON) □DIRECT (RS232) □MCM (ECHELON) □MCM (RS232) □DIAL MODEM □S200 RADIO (RS422)
RADIO ATCS ADDR	7.125.308.015.07.01 (7.RRR.LLL.GGG.NN.01)
FIELD COMM. DEVICE	□WAG (ECHELON) ■NONE □VHF COMM. (ECHELON) □VHF COMM. (RS232) □SPREAD-SPECTRUM (RS232)
USER PORT BAUD	57,600
USER PORT DATA BITS	8
USER PORT PARITY	NONE
USER PORT STOP BITS	1
USER PORT FLOW CONTROL	NONE
AUX PORT BAUD	38,400
AUX PORT DATA BITS	8
AUX PORT PARITY	NONE
AUX PORT STOP BITS	1
AUX PORT FLOW CONTROL	NONE

INSPECTOR NOTE,
CURRENT VALUES MAY VARY DEPENDANT ON FIELD CONDITIONS. MARK UP PER ACTUAL READINGS FOR IN-SERVICE REVISION.

LIT BULB COUNT ON EACH CIRCUIT	NO.	TYPE OF BULB	CURRENT READING IN AMP. AT APPROX. 10.0 V ARRAY VOLTAGE
CURRENT SENSOR (1) AE1, LAMP SET UP	4	□BULBS ■LED	X.X
CURRENT SENSOR (1) AE2, LAMP SET UP	4	□BULBS ■LED	X.X
CURRENT SENSOR (2) BE1, LAMP SET UP	4	□BULBS ■LED	X.X
CURRENT SENSOR (2) BE2, LAMP SET UP	4	□BULBS ■LED	X.X

INSPECTOR NOTE,
VHF RADIO CHANNEL AND DATA CHANNEL = ENGINEERING CHANNEL. CHOOSE PROPER FREQUENCY FROM VHF RADIO CHANNELS.

VHF RADIO CHANNELS			
1	161.130	5	161.550
2	160.710	6	160.785
3	160.560	7	160.785
4	160.860	8	160.785

NOTE 6

MENU → CONFIGURATION → MODULES → ADD MODULE	
MODULE TYPE	WAG
MODULE NAME	DEFAULT
WAG ECHELON NODE	7

NOTE,
REFER TO WAG INSTALLATION AND SETUP IN APPENDIX "A" GCP4000 SYTEM CUT OVER, TEST PROCEDURE AND CHECK OFF SHEET.

MEASURE BATTERY VOLTAGE AT INPUT			
BATTERY VOLTAGE	OB	XXXX	VOLTS
BATTERY VOLTAGE	X-B	XXXX	VOLTS
BATTERY VOLTAGE	B-G	XXXX	VOLTS

INSPECTOR NOTE,
VOLTAGE VALUES MAY VARY DEPENDANT ON FIELD CONDITIONS. MARK UP PER ACTUAL READINGS FOR IN-SERVICE REVISION.

NOTE 5

PROGRAM MENU SELECT	
EDIT DIGITAL INPUTS	■ NO □ YES
EDIT BATTERIES	■ NO □ YES
EDIT RELAYS	■ NO □ YES
EDIT TEST LED'S	■ NO □ YES
EDIT ILOD1 SENSOR ★	■ NO □ YES
EDIT ILOD2 SENSOR ★	■ NO □ YES
EDIT ILOD3 SENSOR ★	■ NO □ YES
EDIT ILOD4 SENSOR ★	■ NO □ YES
EDIT VHF SETTINGS	■ NO □ YES
GCP4K ATCS SUBNODE	16

★STAR = OPTIONS SHOWN DEPENDANT ON NUMBER OF ILODS SELECTED

	CONTROL SYSTEM CONFIGURATION MENU QUESTIONS	
	OPTION	SELECTION
NOTE 8 -	RESET NAMES / MODULES	NO ■ YES □
	RAILROAD NUMBER	125
	CROSSING CONFIGURATION	NORMAL ■ SPLIT GATE □ EXTERNAL ENTRANCE GATE CONTROLLER(S) □
	AND1 USED AS XR	NO □ YES ■
	AND2 USED AS XR	NO ■ YES □
	AND3 USED AS XR	NO ■ YES □
	AND4 USED AS XR	NO ■ YES □
	AND5 USED AS XR	NO ■ YES □
	AND6 USED AS XR	NO ■ YES □
	AND7 USED AS XR	NO ■ YES □
	AND8 USED AS XR	NO ■ YES □
	ENTRANCE GATES*	0 □ 1 □ 2 ■ 3 □ 4 □ 5 □ 6 □ 7 □ 8 □
NOTE 7 -	BATTERY BANKS*	1 □ 2 ■ 3 □
	BATT MON USED*	NO □ YES ■
	OB RESOLUTION*	0.2 □ 0.5 □ 1.0 ■
	X-B RESOLUTION*	0.2 □ 0.5 □ 1.0 ■ NOT PRESENT □
	X-B2 RESOLUTION*	0.2 □ 0.5 □ 1.0 □ NOT PRESENT ■
	BATT MON RESOLUTION*	0.2 □ 0.5 □ 1.0 □ NOT PRESENT ■
	INTERNAL CROSSING CONTROLLERS*	0 □ 1 □ 2 ■
	EXTERNAL CROSSING CONTROLLERS*	0 ■ 1 □ 2 □
	VHF COMMUNICATOR*	YES ■ NO □
	DTMF ACTVATION*	YES ■ NO □
NOTE 1	ACTIVATION CODE	146
	ACTIVATION TIMEOUT	(60 SEC)
	ILOD MODULES*	0 □ 1 □ 2 ■ 3 □ 4 □
NOTE 2 -	ANY LED BULBS USED*	NO □ YES ■
	AUTO INSPECTIONS*	YES □ NO ■
	BELL SENSOR*	0 □ 1 □ 2 ■ 3 □ 4 □
	BELL SENSOR TSS 1*	NO □ YES ■
	BELL SENSOR TSS 2*	NO □ YES ■
	BELL SENSOR TSS 3*	NO ■ YES □
NOTE 3	BELL SENSOR TSS 4*	NO ■ YES □
	BELL SENSOR TSS 5*	NO ■ YES □
	BELL SENSOR TSS 6*	NO ■ YES □
	BELL SENSOR TSS 7*	NO ■ YES □
	BELL SENSOR TSS 8*	NO ■ YES □
	BELL ON*	GATES LOWERING ■ GATES MOVING □ ALWAYS □
	GFT'S	YES ■ NO □
	BATTERIES ON GFTI	1 □ 2 ■
	RTU	NO ■ YES □
NOTE 4	VHF VOICE CHANNEL	1 □ 2 □ 3 □ 4 □ 5 □ 6 □ 7 □ 8 □
	VHF DATA CHANNEL	1 □ 2 □ 3 □ 4 □ 5 □ 6 □ 7 □ 8 □
	USE CELL MODEM NON-CRITICAL FEATURE*	NO ■ YES □
	FULL APPROACH MOVE ALARMS*	ACTIVATE ■ DO NOT ACTIVATE □
	ENABLE PASSWORD	NO ■ YES □

NOTES,

1. OPTION AVAILABLE IF VHF COMMUNICATOR = YES LAST 3 DIGITS OF DOT NUMBER.
2. OPTION AVAILABLE IF ILODS.
3. OPTION AVAILABLE IF BELL SENSORS.
4. OPTION AVAILABLE IF VHF RADIO.
5. ONLY YES IN SPECIAL CIRCUMSTANCES.
6. SELECT "MENU" THEN "CONFIGURATION" FROM SEAR II INTERFACE KEYPAD TO ACCESS MODULE CONFIGURATION MENU.
7. BATTERY BANKS* = NUMBER OF BANKS EXCLUDING THE BANK APPLIED TO THE BAT MON SEAR INPUT
8. YES ON INITIAL SETUP

( ) = NOTE

NEW WORK
CXV1642087 IL2015028
05-31-16 XRL/DKD/
xorail

4000GCP.C07
REV. 09-04-15

REVISIONS						

CSX TRANSPORTATION
RAIL TRANSPORT GROUP ENGINEERING
COMMUNICATIONS AND SIGNALS

W. 83RD PLACE 283146Y

SEAR II₁ CONFIGURATION & FUNCTIONS
CHICAGO, IL M.P. DG-12.87

DESIGNED	DIGITIZED	CHECKED	DATE
XRL	XRL	XRL	05-31-16

DRAWING	SHEET NO	NEXT SH	NEXT FILE	NEXT SH	FILE	SHEET
.....	.....	.....	.....	.....	DG01280	C30

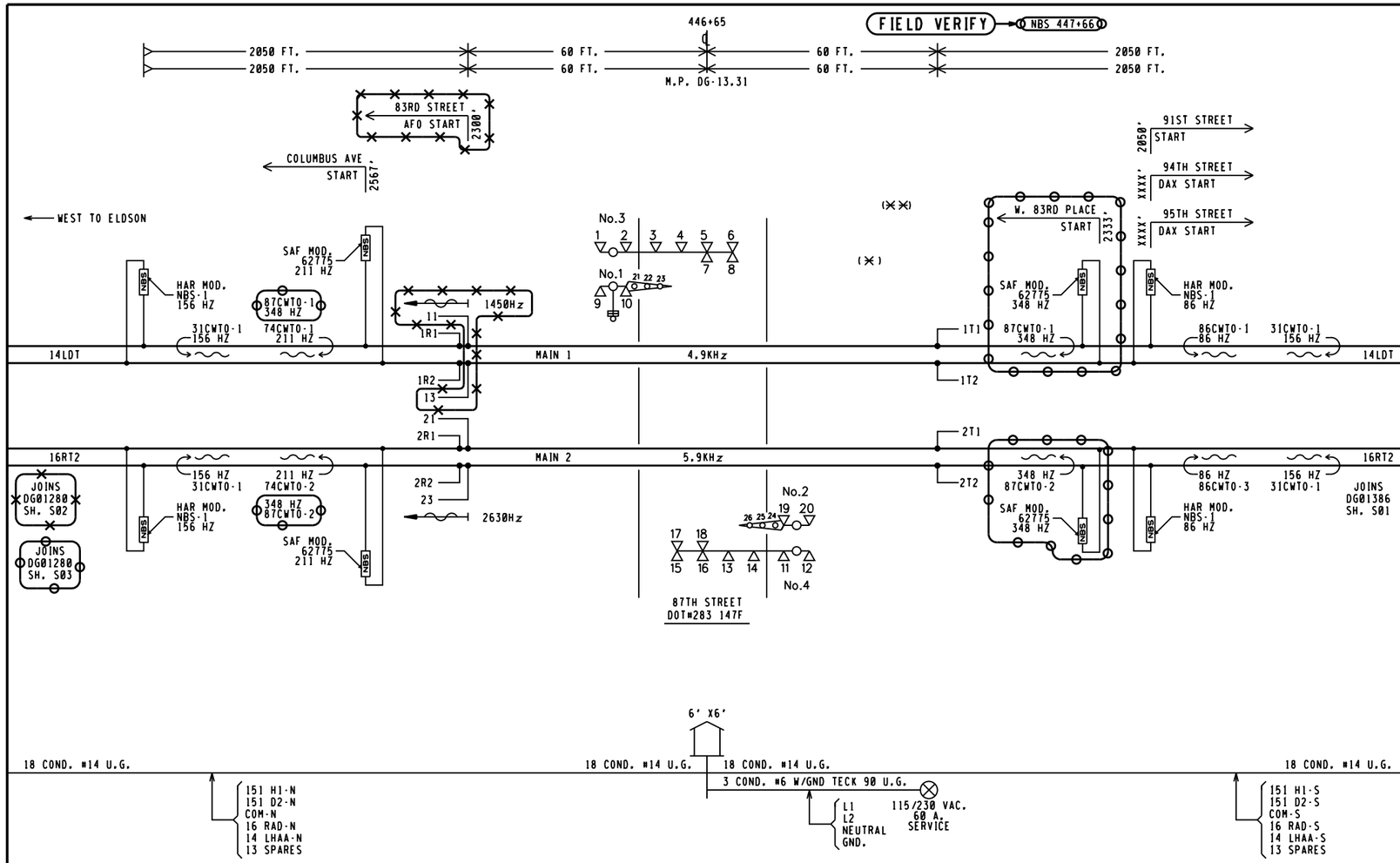

REVISIONS	
11-09-08 RLC	
02-11-15 XRL	IL2014050
02-03-16 XRL	IL2014004

THIS PLAN DOES ☐ DOES NOT ☒
SUPERSEDE PLAN DATED 11-01-15
CSX PROJECT # IL2015030

= NOTE
= IN
= OUT

CXV1642087 IL2015028
05-31-16 XRL/DKD/

xorail

NOTES:
1. (✕) = LOCATION OF HOUSE
2. (✕✕) = LOCATION OF SERVICE

CSX TRANSPORTATION
RAIL TRANSPORT GROUP ENGINEERING
COMMUNICATIONS AND SIGNALS

87TH STREET 283147F

TRACK AND SIGNAL PLAN
CHICAGO, IL M.P. DG-13.31

DESIGNED	DIGITIZED	CHECKED	DATE
CSX	XRL	CSX	06-12-07

DRAWING	SHEET NO	NEXT SH	NEXT FILE	NEXT SH	FILE	SHEET
.....	.....	.....	DG01331	E01	DG01331	S01

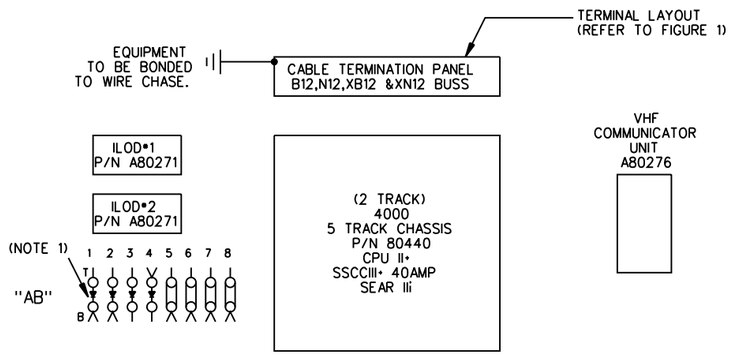

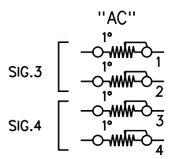

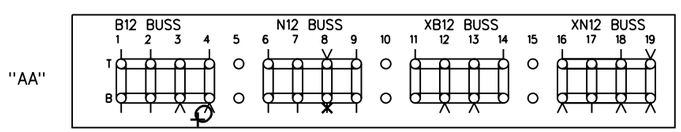

TERMINAL LAYOUT
FIGURE 1

NOTE:
1) DENOTES RECTIFIER : (SAFETRAN• 8008A299006)

SIDE"A"

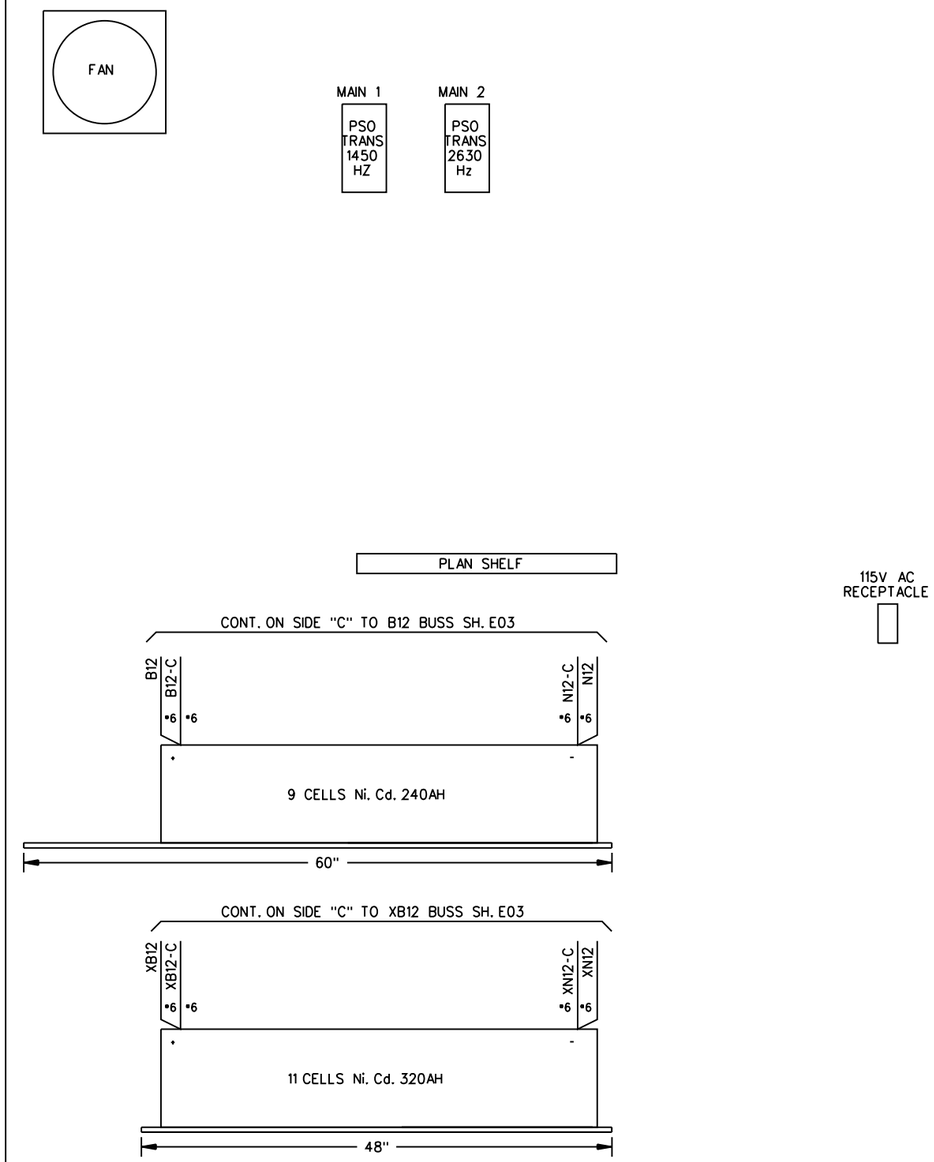

SIDE"B"

✕✕✕ = OUT

CXV1642087 IL2015028
05-31-16 XRL/DKD/

xorail

REVISIONS	
11-09-08 RLC	
02-11-15 XRL	IL2014050

CSX TRANSPORTATION
RAIL TRANSPORT GROUP ENGINEERING
COMMUNICATIONS AND SIGNALS

87TH STREET 283147F

HOUSE LAYOUT
CHICAGO, IL M.P. DG-13.31

DESIGNED	DIGITIZED	CHECKED	DATE
CSX	XRL	CSX	06-12-07

DRAWING	SHEET NO	NEXT SH	NEXT FILE	NEXT SH	FILE	SHEET
.....	.....	.....	DG01331	E03	DG01331	E02

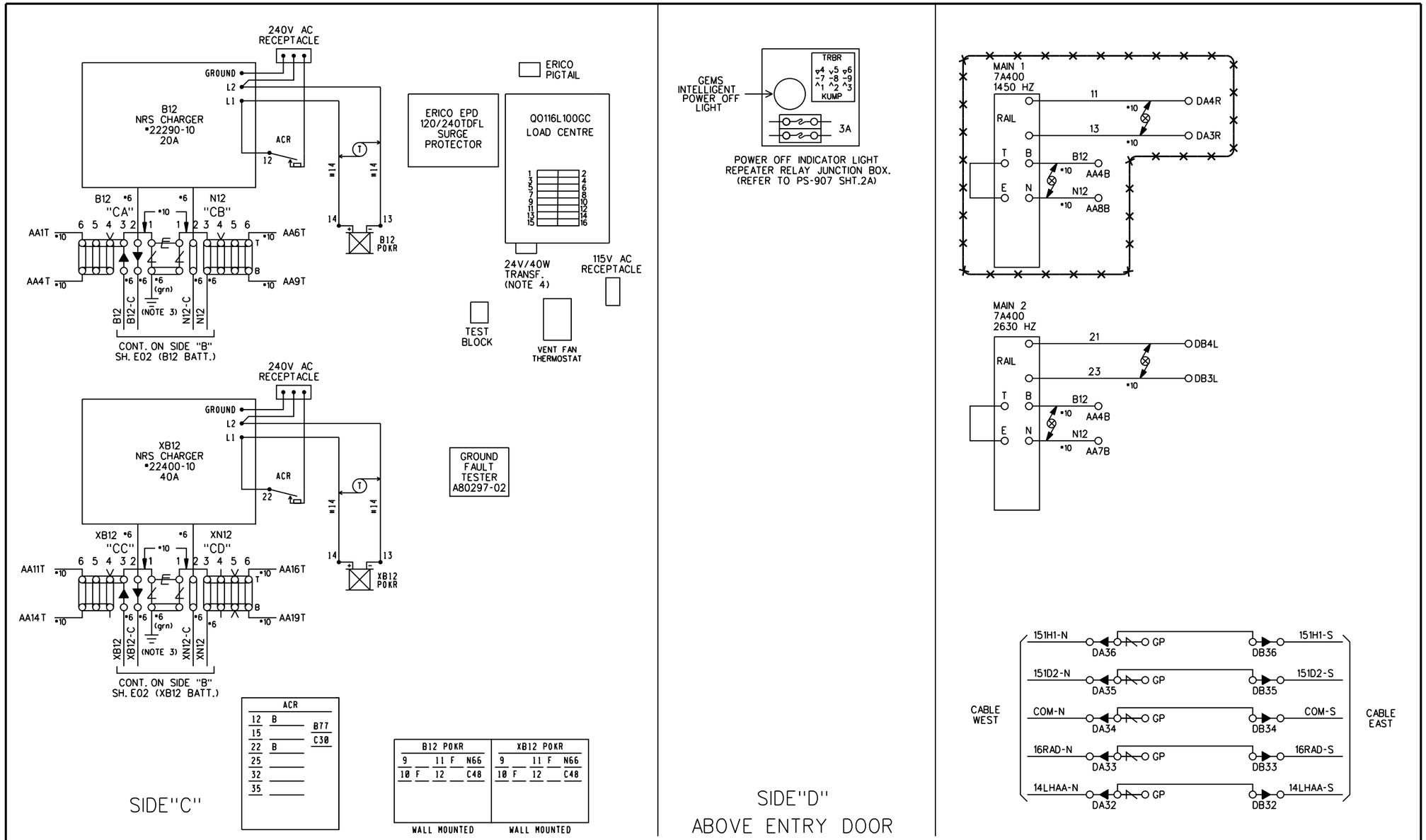

NOTES:

1) # DENOTES EQUALIZER TYPE: (SAFETRAN #022700-1X)

2) DENOTES LIGHTNING ARRESTER TYPE: (SAFETRAN #022585-1X)

3) SURGE PROTECTION SHOULD BE BONDED TO BUNGALOW.

4) 24V-40W TRANSFORMER (CN STOCK #02-45-367)

: OUT

CXV1642087 05-31-16 IL2015028 XRL/DKD/

xorail

REVISIONS	
11-09-08 RLC	
02-11-15 XRL	IL2014050

CSX TRANSPORTATION

RAIL TRANSPORT GROUP ENGINEERING
COMMUNICATIONS AND SIGNALS

87TH STREET 283147F

HOUSE LAYOUT
CHICAGO, IL M.P. DG-13.31

DESIGNED	DIGITIZED	CHECKED	DATE
CSX	XRL	CSX	06-12-07

DRAWING	SHEET NO	NEXT SH	NEXT FILE	NEXT SH	FILE	SHEET
.....	.....	.....	DG01331	E04	DG01331	E03

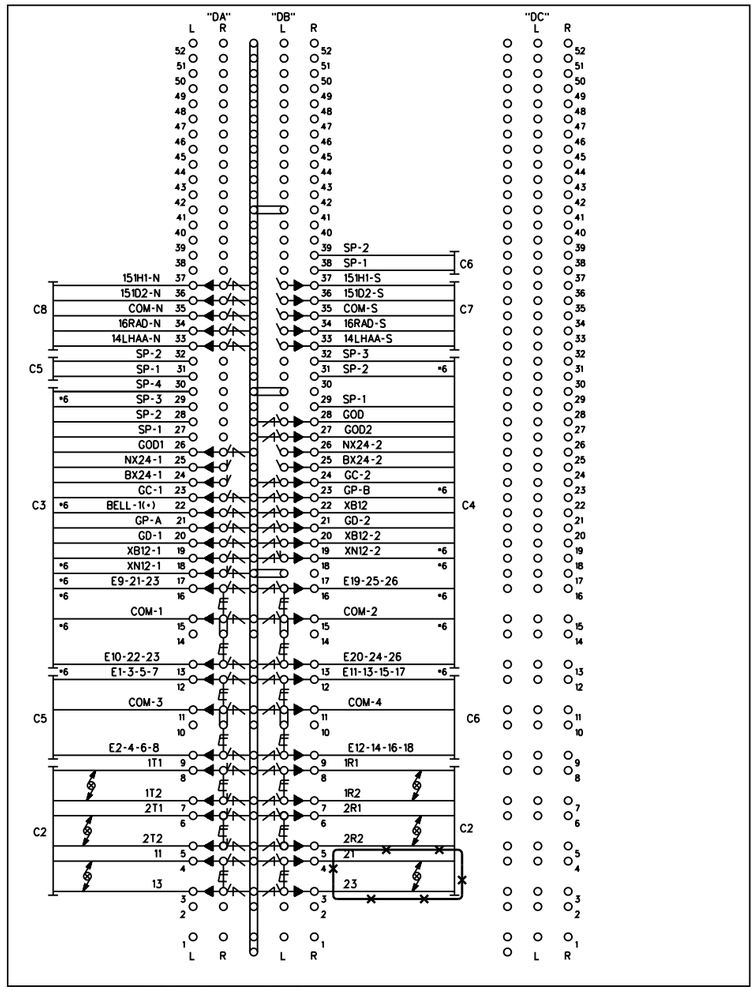

SIDE "D" (INSIDE)

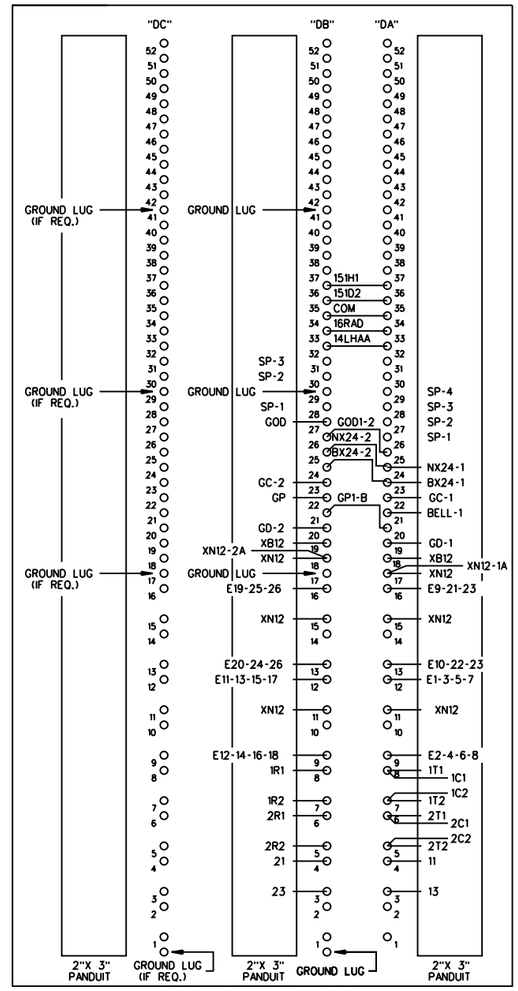

SIDE "D" (OUTSIDE)

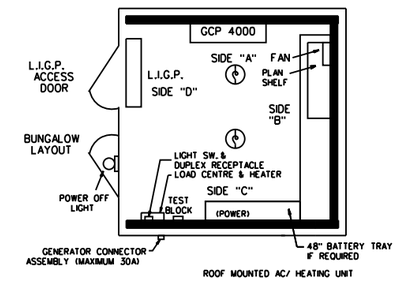

CABLE CONSIST:

C1-3C*6 TECK 90 U/G TO MAIN SERVICE
C2-(6)-2SC*6 TW. TO TRACK
C3-16C (7*6,9*14) TO GATE (SIG.*1)
C4-16C (7*6,9*14) TO GATE (SIG.*2)
C5-5C *6 TO CANT (SIG.*3)
C6-5C *6 TO CANT (SIG.*4)
C7-18C *14 TO EAST CABLE
C8-18C *14 TO WEST CABLE

NOTES:

1) DENOTES LIGHTNING ARRESTER TYPE: (SAFETRAN *022585-1X)
2) DENOTES EQUALIZER TYPE: (SAFETRAN *022700-1X)
3) DENOTES TWISTED PAIR.
4) ENSURE DOUBLE NUTTING OF ALL TERMINALS.

*** : OUT

CXV1642087 05-31-16 IL2015028 XRL/DKD/

xorail

REVISIONS	
11-09-08 RLC	
02-11-15 XRL	IL2014050

CSX TRANSPORTATION
RAIL TRANSPORT GROUP ENGINEERING
COMMUNICATIONS AND SIGNALS

87TH STREET 283147F

TERMINAL BOARD LAYOUT
CHICAGO, IL M.P. DG-13.31

DESIGNED	DIGITIZED	CHECKED	DATE
CSX	XRL	CSX	06-12-07

DRAWING	SHEET NO	NEXT SH	NEXT FILE	NEXT SH	FILE	SHEET
.....	.....	.....	DG01331	E05	DG01331	E04