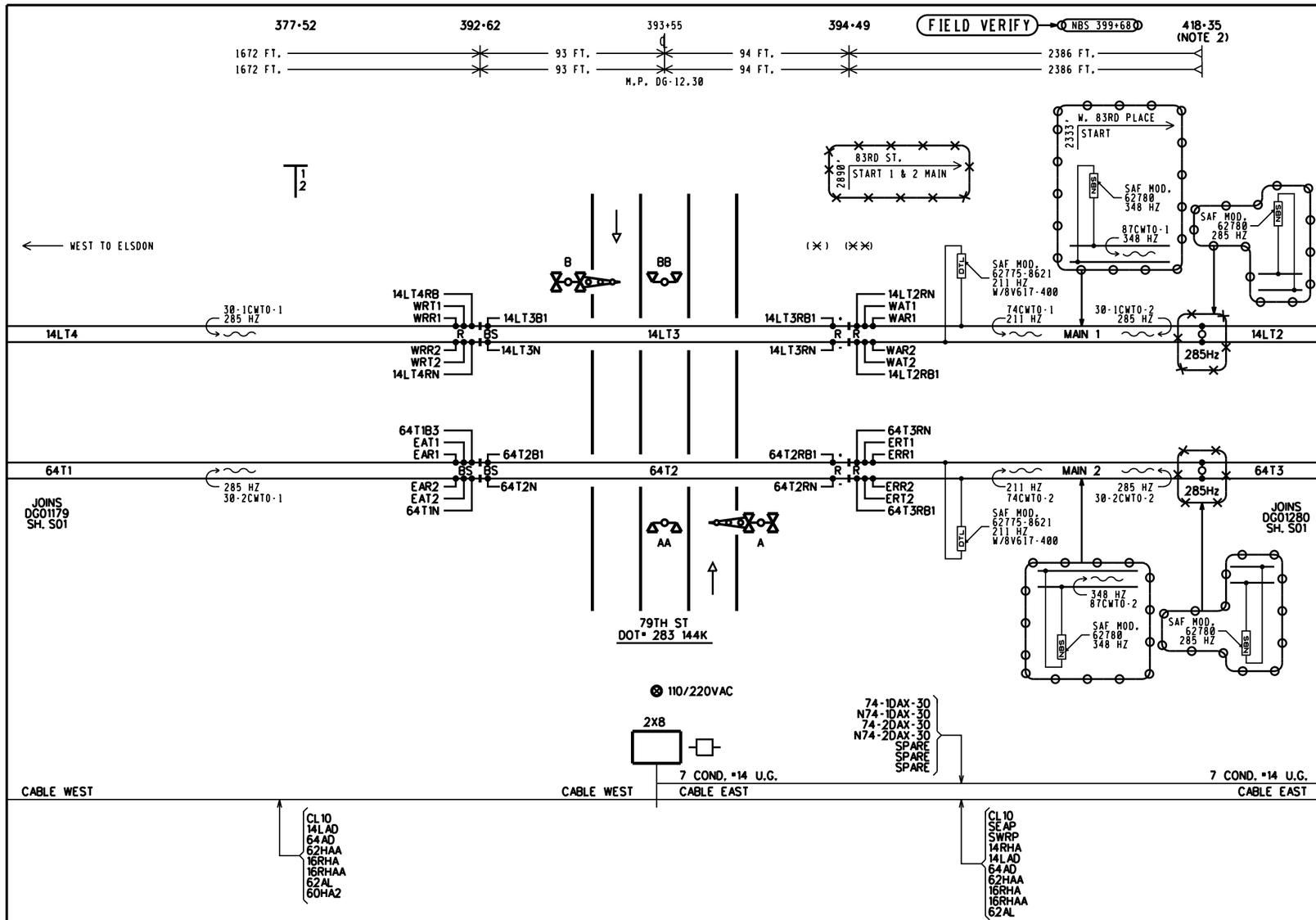

NOTES:

1) SPEED RESTRICTION - MP 11.8 TO MP 12.3 - 30 MPH
SPEED RESTRICTION - MP 12.3 TO MP 19.3 - 40 MPH
2) DISTANCE MEASURED FROM TRACK LEADS.
3) DENOTES MULTI-FREQ. NARROW BAND SHUNT (62775-8621)

REVISIONS	
09-15-10 FIELD CHECK	
02-03-16 XRL	IL2014004,IL2015033

MATERIALS NOTE, ORDER TWO NEW 285HZ SAFETRAN NBS-2

: NOTE
: IN
: OUT

CXV1642087 IL2015028
05-31-16 XRL/DKD/

xorail

CSX TRANSPORTATION
RAIL TRANSPORT GROUP ENGINEERING
COMMUNICATIONS AND SIGNALS

79TH STREET 283144K

TRACK AND SIGNAL PLAN
CHICAGO, IL M.P. DG-12.30

DESIGNED	DIGITIZED	CHECKED	DATE
CSX	XRL	CSX	09-09-10

DRAWING	SHEET NO	NEXT SH	NEXT FILE	NEXT SH	FILE	SHEET
.....	.....	.....	DG01230	C01	DG01230	S01

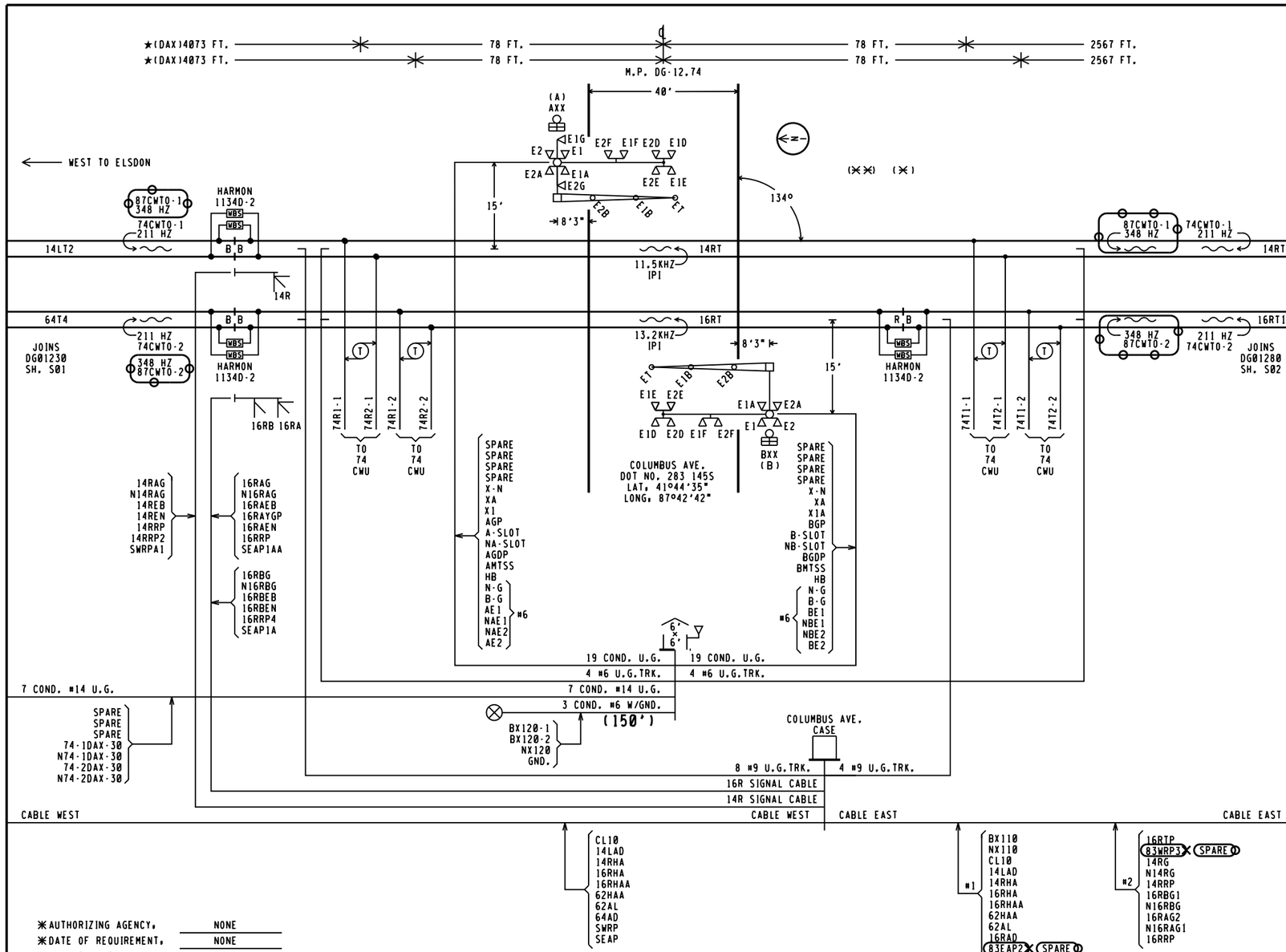

✱AUTHORIZING AGENCY, NONE

✱DATE OF REQUIREMENT, NONE

✱AMOUNT OF TIME (SEC.), NONE

APPROACH LENGTHS TABLE DC, AFO, TYPE C, MOTION, CWT, OR OTHER	WESTWARD ML 1 CWT	EASTWARD ML 1 CWT	WESTWARD ML 2 CWT	EASTWARD ML 2 CWT
STANDARD MINIMUM WARNING TIME IN SECONDS	25	25	25	25
ROADWAY GATE TIME IN SECONDS	5	5	5	5
CLEARANCE TIME IN SECONDS	5	5	5	5
DOT TRAFFIC LIGHT SIMULTANEOUS PREEMPT TIME IN SECONDS ✱	0	0	0	0
DESIGNED WARNING TIME FOR TRAINS AT TIME TABLE SPEED	35 SEC.	35 SEC.	35 SEC.	35 SEC.
DOT TRAFFIC LIGHT ADVANCE PREEMPT TIME IN SECONDS ✱	0	0	0	0
CONTROL EQUIPMENT DECISION TIME IN SECONDS	5	5	5	5
DESIGNED DETECTION TIME FOR TRAINS AT TIME TABLE SPEED	40 SEC.	40 SEC.	40 SEC.	40 SEC.
TIME TABLE MAXIMUM TRAIN SPEED IN MILES PER HOUR	40	40	40	40
BUFFER SPEED IN MILES PER HOUR	5	5	5	5
TOTAL WARNING SYSTEM DESIGN SPEED IN MILES PER HOUR	45	45	45	45
APPROACH DISTANCE TO ISLAND EDGE IN FEET	2567 ★	2567	2567 ★	2567
HALF WIDTH OF ISLAND IN FEET	78	78	78	78
APPROXIMATE MILE POSTS FOR APPROACH CIRCUIT	11.95	13.24	11.95	13.24

⊖⊖⊖ : IN

✕✕✕ : OUT

CXV1642087 IL2015028

05-31-16 XRL/DKD/

xorail

REVISIONS

02-03-16 XRL	IL2014004,IL2015033

NOTES,

1. 12" LED MAXIMUM CURRENT 1.7A
   LED GATE ARM LIGHTS .3A MAXIMUM
2. COMBO UNITS,
   (A) CANTILEVER = 24' / GATE = 28'
   (B) CANTILEVER = 24' / GATE = 28'
3. (✕) = LOCATION OF 6'X6' HOUSE
   (✕✕)= LOCATION OF CASE
4. (N) = APPROXIMATE COMPASS NORTH.
5. TRANSMITTER LEADS FOR MOTION OR PREDICTOR EQUIPMENT SHOULD BE CONNECTED ON THE BUNGALOW OR SHORT LEAD SIDE OF THE CROSSING.
6. ISLAND TRACK LEADS SHOULD BE CONNECTED 50 FEET FROM ROAD EDGE BUT ON NARROW ROADS (20' OR LESS) ISLAND LENGTH SHALL BE 120 FEET.
7. WARNING SYSTEM APPROACH CIRCUIT DISTANCES ARE TO BE MEASURED FROM THE ISLAND TRACK CONNECTIONS.
8. ★ = ACTUAL APPROACH DISTANCE IS MORE THAN CALCULATED APPROACH DISTANCE DUE TO DAXING

CSX TRANSPORTATION

RAIL TRANSPORT GROUP ENGINEERING
COMMUNICATIONS AND SIGNALS

ASHBURN INTERLOCKING

TRACK AND SIGNAL PLAN
CHICAGO, IL M.P. DG-12.80

DESIGNED	DIGITIZED	CHECKED	DATE
XRL/KSB	XRL/KSB	XRL	05-05-14

DRAWING	SHEET NO	NEXT SH	NEXT FILE	NEXT SH	FILE	SHEET
.....	.....	.....	DG01280	S02	DG01280	S01

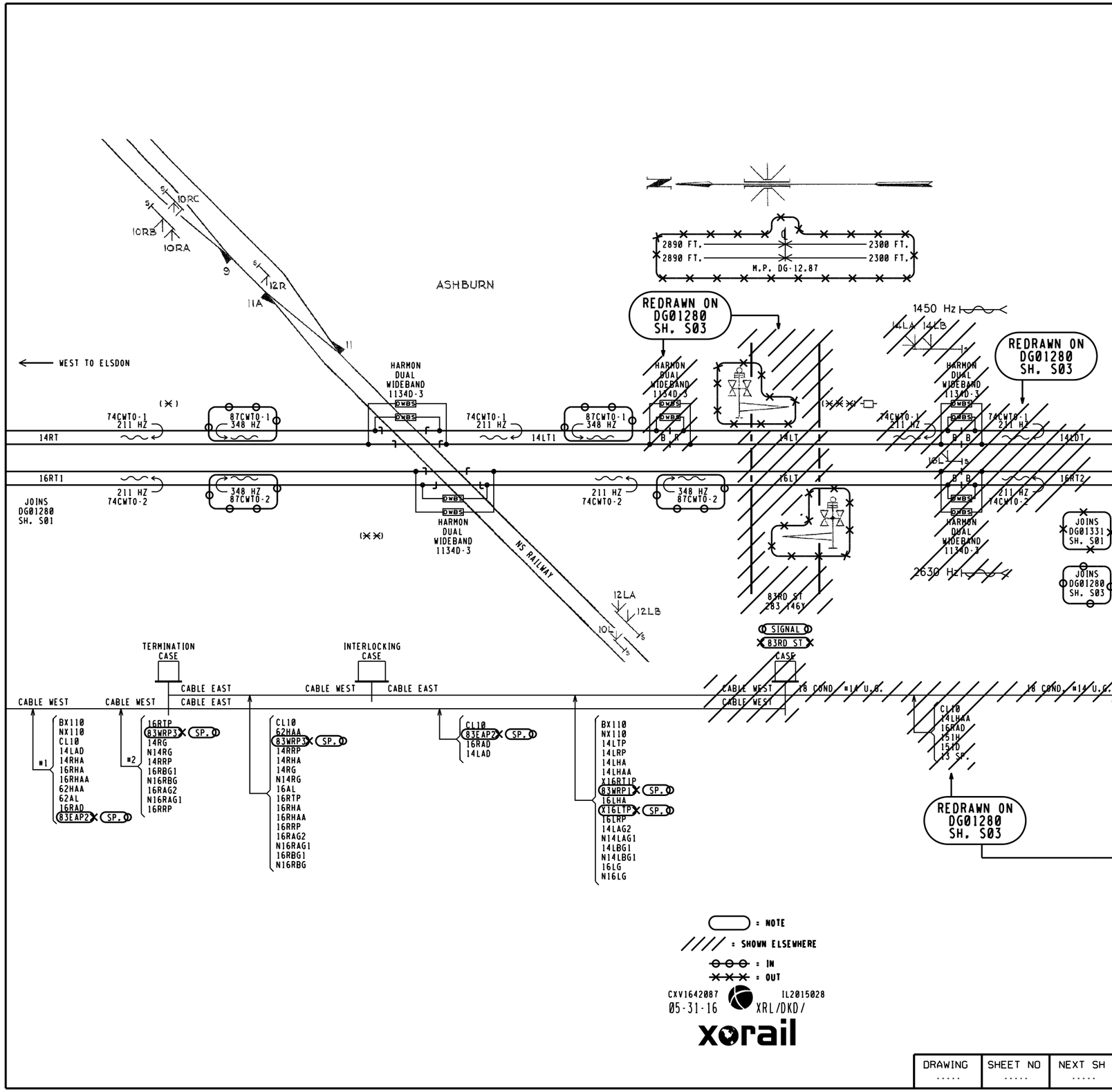

REVISIONS

02-03-16	IL2015033
VECTOR CREATED BY XRL	IL2014004

NOTES:

1. (X) = LOCATION OF TERMINATION CASE.
2. (XX) = LOCATION OF INTERLOCKING CASE.
3. (XXX) = LOCATION OF 83RD ST CASE.

CSX TRANSPORTATION

RAIL TRANSPORT GROUP ENGINEERING
COMMUNICATIONS AND SIGNALS

ASHBURN INTERLOCKING

TRACK AND SIGNAL PLAN
CHICAGO, IL M.P. DG-12.80

DESIGNED	DIGITIZED	CHECKED	DATE
CSX	XRL	CSX	02-03-16

DRAWING	SHEET NO	NEXT SH	NEXT FILE	NEXT SH	FILE	SHEET
.....	.....	.....	DG01280	P01 S03	DG01280	S02

RASTER FILE: DG01280S02.CIT MS FILE: DG01280.S02

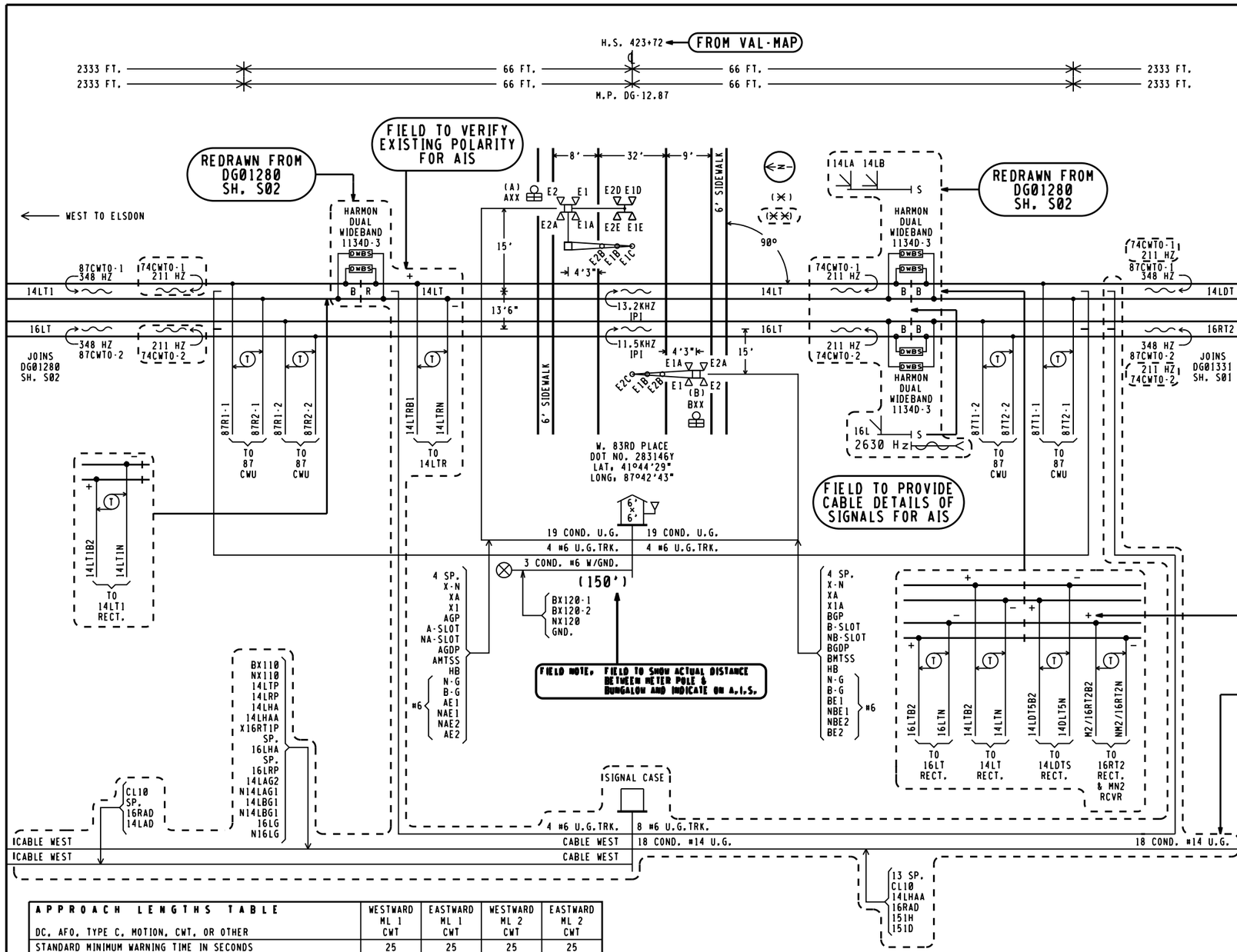

APPROACH LENGTHS TABLE DC, AFO, TYPE C, MOTION, CWT, OR OTHER	WESTWARD ML 1 CWT	EASTWARD ML 1 CWT	WESTWARD ML 2 CWT	EASTWARD ML 2 CWT
STANDARD MINIMUM WARNING TIME IN SECONDS	25	25	25	25
ROADWAY GATE TIME IN SECONDS	5	5	5	5
CLEARANCE TIME IN SECONDS	1	1	1	1
DOT TRAFFIC LIGHT SIMULTANEOUS PREEMPT TIME IN SECONDS ✳	0	0	0	0
PRESCRIBED WARNING TIME FOR TRAINS AT TIME TABLE SPEED	31 SEC.	31 SEC.	31 SEC.	31 SEC.
DOT TRAFFIC LIGHT ADVANCE PREEMPT TIME IN SECONDS ✳	0	0	0	0
CONTROL EQUIPMENT DECISION TIME IN SECONDS	5	5	5	5
DESIGNED DETECTION TIME FOR TRAINS AT TIME TABLE SPEED	36 SEC.	36 SEC.	36 SEC.	36 SEC.
TIME TABLE MAXIMUM TRAIN SPEED IN MILES PER HOUR	40	40	40	40
BUFFER SPEED IN MILES PER HOUR	5	5	5	5
TOTAL WARNING SYSTEM DESIGN SPEED IN MILES PER HOUR	45	45	45	45
APPROACH DISTANCE TO ISLAND EDGE IN FEET	2333	2333	2333	2333
HALF WIDTH OF ISLAND IN FEET	66	66	66	66
APPROXIMATE MILE POSTS FOR APPROACH CIRCUIT	12.41	13.46	12.41	13.46

✳AUTHORIZING AGENCY, "NONE"
✳DATE OF REQUIREMENT, "NONE"
✳AMOUNT OF TIME (SEC.), "NONE"

= EXISTING
= NOTE

NEW WORK
CXV1642087 IL2015028
05-31-16 XRL/DKD/
xorail

REVISIONS

NOTES:

1. 12" LED MAXIMUM CURRENT 1.0A AT 10 VOLTS LED GATE ARM LIGHTS .3A MAXIMUM
2. COMBO UNIT,(A) CANTILEVER 12'/ GATE 20' GATE LENGTH (B) 20'
3. (✳) = LOCATION OF HOUSE
4. (✳✳) = LOCATION OF 83RD ST. CASE
5. (N) = APPROXIMATE COMPASS NORTH.
6. TRANSMITTER LEADS FOR MOTION OR PREDICTOR EQUIPMENT SHOULD BE CONNECTED ON THE BUNGALOW OR SHORT LEAD SIDE OF THE CROSSING.
7. ISLAND TRACK LEADS SHOULD BE CONNECTED 50 FEET FROM ROAD EDGE BUT ON NARROW ROADS (20' OR LESS) ISLAND LENGTH SHALL BE 120 FEET.
8. WARNING SYSTEM APPROACH CIRCUIT DISTANCES ARE TO BE MEASURED FROM THE ISLAND TRACK CONNECTIONS.

CSX TRANSPORTATION
RAIL TRANSPORT GROUP ENGINEERING
COMMUNICATIONS AND SIGNALS

W. 83RD PLACE 283146Y

TRACK AND SIGNAL PLAN
CHICAGO, IL M.P. DG-12.87

4000GCP.S01
REV. 09-04-15

DESIGNED	DIGITIZED	CHECKED	DATE
XRL	XRL	XRL	05-31-16

DRAWING	SHEET NO	NEXT SH	NEXT FILE	NEXT SH	FILE	SHEET
			.....	.....	DG01280	S03

```
Minimum Program Steps Report
----------------------------

Location and SIN
----------------
DOT Number: 283145S
Milepost Number: DG-12.74
Site Name: COLUMBUS AVE

SIN: 712530800916 *

* Parameter is part of office check number calculation.

MCF and Template Selection
--------------------------
MCF Name: GCP-T6X-02-6.mcf
MCF Revision: 26
MCFCRC: 494D2656

Template = 1A,6 Trk Bi (OCCN) *

* Parameter is part of office check number calculation.

Minimum Program Steps
---------------------
TEMPLATE:  module configuration
Track 2/RIO 1 Slot = Track (OCCN) *

TEMPLATE:  track 1-Bi, Island
Track 1 , GCP Frequency = 211 Hz (OCCN) *
Track 1 , Approach Distance = 2567 ft (OCCN) *
Track 1 , Prime UAX = IP (OCCN) *
Track 1 , GCP Transmit Level = High (Set in Field,TCN)
Track 1 , Isl Frequency = 11.5 kHz (OCCN) *

TEMPLATE:  track 2-Bi, Island
Track 2 , GCP Frequency = 211 Hz (OCCN) *
Track 2 , Approach Distance = 2567 ft (OCCN) *
Track 2 , Prime UAX = IP (OCCN) *
Track 2 , Prime UAX Pickup = 15 sec (OCCN) *
Track 2 , GCP Transmit Level = High (Set in Field,TCN)
Track 2 , Isl Frequency = 13.2 kHz (OCCN) *

TEMPLATE:  SSCC
SSCC-1 Number of GDs = 1 (OCCN) *
SSCC-2 Number of GPs = 1 (OCCN) *
SSCC-2 Number of GDs = 1 (OCCN) *

TEMPLATE:  OOS
OOS Control = Display+OOS IPs (OCCN) *
OOS Timeout = 1 hrs (Set in Field)
T2 OOS Control = OOS Input 1 (OCCN) *

TEMPLATE:  IP assignment 1
IN 1.1 = T1 Prime UAX (OCCN) *
IN 2.1 = T2 Prime UAX (OCCN) *

TEMPLATE:  IP assignment SSCC
IN 7.2 = Not Used (OCCN) *
IN 8.2 = Out Of Service IP 1 (OCCN) *
IN 8.4 = GD 2.1 (OCCN) *
IN 8.5 = GP 2.1 (OCCN) *

MS4000 configuration
Track 1 , GCP Frequency = 211 Hz (OCCN,TCN) (Hidden) *
Track 1 , Prime UAX = IP (OCCN) (Hidden) *
Track 1 , Isl Frequency = 11.5 kHz (OCCN) (Hidden) *
IN 1.1 = T1 Prime UAX (OCCN) (Hidden) *

GCP:  track 1
Track 1 , Island Distance = 156 ft (Set in Field,TCN)

GCP:  track 2
Track 2 , Island Distance = 156 ft (Set in Field,TCN)

ADVANCED:  site options
Daylight Savings = On (Set in Field)

SSCC:  1
SSCC-1 Gate Delay = 5 sec (OCCN) *
SSCC 1 , Flash Rate = 55 (OCCN) *

SSCC:  2
SSCC-2 Gate Delay = 5 sec (OCCN) *
SSCC 2 , Flash Rate = 55 (OCCN) *

SEAR
DI 1 = Gnd Flt Tester 1 (OCCN) *
DI 2 = Gnd Flt Tester 2 (OCCN) *
Rly 1 = Ground Fault Test (OCCN) *
Rly 2 = AC Control (OCCN) *

SEAR:  slot 7-8 inputs
IN 7.1 = TSS 1 (OCCN) *
IN 8.1 = TSS 2 (OCCN) *
IN 8.3 = POK 2 (OCCN) *

Express: MS4000 configuration
Track 1 , GCP Frequency = 211 Hz (OCCN,TCN) (Hidden) *
Track 1 , Prime UAX = IP (OCCN) (Hidden) *
IN 1.1 = T1 Prime UAX (OCCN) (Hidden) *

* Parameter is part of office check number calculation.

Check Numbers
-------------
Office Check Number: 1410FAAC
Config. Check Number: 6648FEAA
(Based on MCF Revision 26)

Parameters not part of office check number calculation:

Track 1 , GCP Transmit Level = High (Set in Field)
Track 2 , GCP Transmit Level = High (Set in Field)
OOS Timeout = 1 hrs (Set in Field)
Track 1 , Island Distance = 156 ft (Set in Field)
Track 2 , Island Distance = 156 ft (Set in Field)
Daylight Savings = On (Set in Field)

Comments
--------
<none>
```

: IN
: OUT

CXV1642087 IL2015028
05-31-16 XRL/DKD/

xorail

6'X 6' PTC CROSSING HOUSE - COLUMBUS AVE.

REVISIONS	
02-03-16 XRL	IL2014004

CSX TRANSPORTATION
RAIL TRANSPORT GROUP ENGINEERING
COMMUNICATIONS AND SIGNALS

ASHBURN INTERLOCKING

MINIMUM PROGRAM STEPS REPORT CWE-74
CHICAGO, IL M.P. DG-12.80

DESIGNED	DIGITIZED	CHECKED	DATE
XRL/KSB	XRL/KSB	XRL	05-05-14

DRAWING	SHEET NO	NEXT SH	NEXT FILE	NEXT SH	FILE	SHEET
.....	.....	.....	DG01280	G01	DG01280	P01

P02

Minimum Program Steps Report

Location and SIN

DOT Number: 283146Y
Milepost Number: DG-12.87
Site Name: W 83RD PLACE

SIN: 712530801516 *

* Parameter is part of office check number calculation.

MCF and Template Selection

MCF Name: GCP-T6X-02-6.mcf
MCF Revision: 26
MCFCRC: 494D2656

Template = 1A.6 Trk B1 (OCCN) *

* Parameter is part of office check number calculation.

Minimum Program Steps

TEMPLATE: module configuration
Chassis Type = Dual Two Track (OCCN) *
Track 2/RIO 1 Slot = Track (OCCN) *

TEMPLATE: track 1-B1, Island
Track 1 , GCP Frequency = 348 Hz (OCCN) *
Track 1 , Approach Distance = 2333 ft (OCCN) *
Track 1 , Prime Warning Time = 31 sec (OCCN) *
Track 1 , GCP Transmit Level = Medium (Set in Field,TCN)
Track 1 , Isl Frequency = 13.2 kHz (OCCN) *

TEMPLATE: track 2-B1, Island
Track 2 , GCP Frequency = 348 Hz (OCCN) *
Track 2 , Approach Distance = 2333 ft (OCCN) *
Track 2 , Prime Warning Time = 31 sec (OCCN) *
Track 2 , GCP Transmit Level = Medium (Set in Field,TCN)
Track 2 , Isl Frequency = 11.5 kHz (OCCN) *

TEMPLATE: SSCC
SSCC-1 Number of GDs = 1 (OCCN) *
SSCC-2 Number of GPs = 1 (OCCN) *
SSCC-2 Number of GDs = 1 (OCCN) *

TEMPLATE: OOS
OOS Control = Display+OOS IPs (OCCN) *
OOS Timeout = 1 hrs (Set in Field)
T2 OOS Control = OOS Input 1 (OCCN) *

TEMPLATE: IP assignment SSCC
IN 7.2 = Not Used (OCCN) *
IN 8.2 = Out Of Service IP 1 (OCCN) *
IN 8.4 = GD 2.1 (OCCN) *
IN 8.5 = GP 2.1 (OCCN) *

GCP: track 1
Track 1 , Island Distance = 132 ft (Set in Field,TCN)

GCP: track 2
Track 2 , Island Distance = 132 ft (Set in Field,TCN)

ADVANCED: site options
Daylight Savings = On (Set in Field)

SSCC: 1
SSCC-1 Gate Delay = 5 sec (OCCN) *
SSCC 1 , Flash Rate = 55 (OCCN) *

SSCC: 2
SSCC-2 Gate Delay = 5 sec (OCCN) *
SSCC 2 , Flash Rate = 55 (OCCN) *

SEAR
DI 1 = Gnd Flt Tester 1 (OCCN) *
DI 2 = Gnd Flt Tester 2 (OCCN) *
Rly 1 = Ground Fault Test (OCCN) *
Rly 2 = AC Control (OCCN) *

SEAR: slot 7-8 inputs
IN 7.1 = TSS 1 (OCCN) *
IN 8.1 = TSS 2 (OCCN) *
IN 8.3 = POK 2 (OCCN) *

* Parameter is part of office check number calculation.

Check Numbers

Office Check Number: 3DC403A7
Config. Check Number: 1EAD5A48
(Based on MCF Revision 26)

Parameters not part of office check number calculation:

Track 1 , GCP Transmit Level = Medium (Set in Field)
Track 2 , GCP Transmit Level = Medium (Set in Field)
OOS Timeout = 1 hrs (Set in Field)
Track 1 , Island Distance = 132 ft (Set in Field)
Track 2 , Island Distance = 132 ft (Set in Field)
Daylight Savings = On (Set in Field)

Comments

<none>

NEW WORK
CXV1642087 IL2015028
05-31-16 XRL/DKD/
xorail

4000GCP.P01
REV. 09-04-15

REVISIONS			CSX TRANSPORTATION RAIL TRANSPORT GROUP ENGINEERING COMMUNICATIONS AND SIGNALS			
			W. 83RD PLACE 283146Y MINIMUM PROGRAM STEPS REPORT CWE-87 CHICAGO, IL M.P. DG-12.87			
			DESIGNED XRL	DIGITIZED XRL	CHECKED XRL	DATE 05-31-16
DRAWING	SHEET NO	NEXT SH	NEXT FILE DG01280	NEXT SH G01	FILE DG01280	SHEET P02

TOP ROW

ACR			X-B POKR			MCR			74-1DAXPR			74-2DAXPR		
12	B	B77	9	11 F	N68	9 F	11	N41	12 F		B8	12 F		B8
15	B	C30	10 F	12	C48	10	12	C48	15 F		C30	15 F		C30
22	B				C49			C49	22			22		
25	B		OB POKR			B-G POKR			23			23		
32	B		9	11 F	N68	9 F	11 F	N68	25			25		
35	B		10 F	12	C48	10 F	12	C48	32			32		
									35			35		

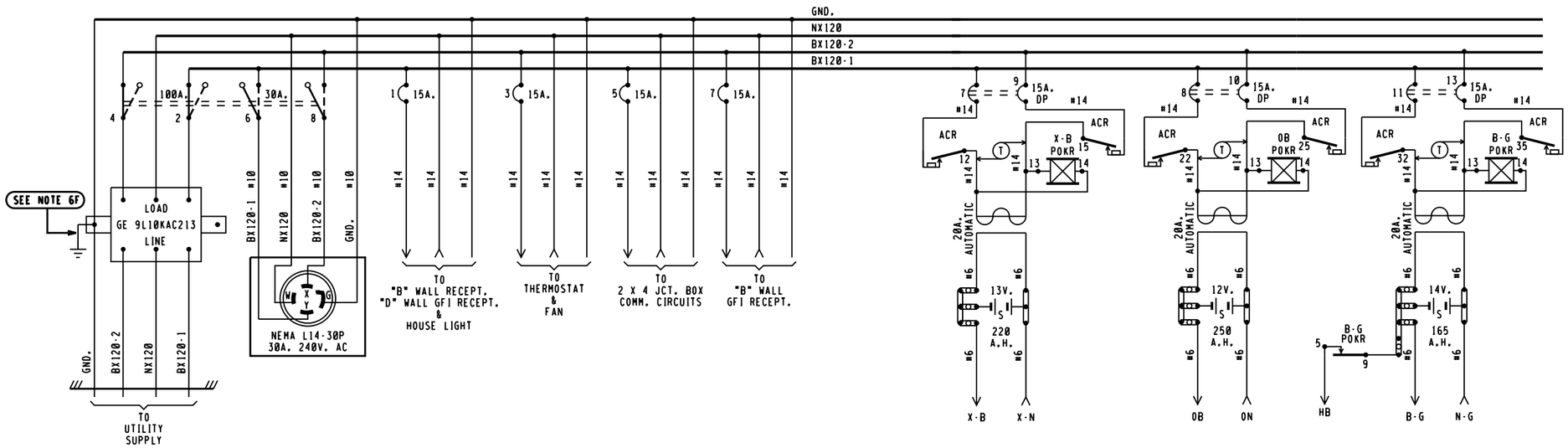

BX120-1	BX120-2
13.0 AMPS	11.0 AMPS

MAXIMUM LOAD
CALCULATED PER SS360

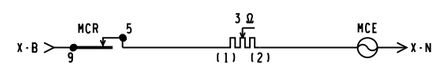

NOTES.

1 - REFERENCES ARE PER SCMS-13.
2 - ARRESTERS ARE PER SS382.
3 - SHELF RELAY PLACEMENT ON CONSIST CHART HAS NO SIGNIFICANCE.
4 - PLUG-IN RELAYS ARE VIEWED FROM THE FRONT OF RACK.
5 - BATTERY A.H. CAPACITY SHOWN IS THE MINIMUM REQUIREMENT.
6 - WIRING
  A - FEED TO ALL BUSSES, LIGHT CIRCUITS,MOTOR CIRCUITS TO BE #10 FLEX.
  B - 120-VOLT FEED FROM ENTRANCE TO POWER BUSS TO BE #10 FLEX.
  C - ALL TRACK WIRES TO BE #10 FLEX.
  D - ALL OTHERS TO BE #16 FLEX UNLESS NOTED.
  E - GROUND WIRE NOT NECESSARY WHEN GE ARRESTER IS MOUNTED ON GROUND PLANE OR METAL ENCLOSURE AFFIXED DIRECTLY TO BUNGALOW METALLIC STRUCTURAL MEMBER.
7 - CIRCUIT INTERRUPTERS 2 & 4 ARE MECHANICALLY INTERLOCKED WITH CIRCUIT INTERRUPTERS 6 & 8.
8 - CHARGERS TO BE WIRED FOR 240VAC
9 - CIRCUIT BREAKER PANEL-00116L125G (16 SPACES)

: IN
: OUT

CXV1642087 IL2015028
05-31-16 XRL/DKD/
xorail

6'X 6' PTC CROSSING HOUSE - COLUMBUS AVE.

REVISIONS	
02-03-16 XRL	IL2014004

CSX TRANSPORTATION
RAIL TRANSPORT GROUP ENGINEERING
COMMUNICATIONS AND SIGNALS

ASHBURN INTERLOCKING

POWER DISTRIBUTION
CHICAGO, IL M.P. DG-12.80

DESIGNED	DIGITIZED	CHECKED	DATE
XRL/KSB	XRL/KSB	XRL	05-05-14

DRAWING	SHEET NO	NEXT SH	NEXT FILE	NEXT SH	FILE	SHEET
.....	.....	.....	DG01280	C01	DG01280	E01

E020

TOP ROW

ACR		
12	B	B77
15	B	C30
22	B	
25	B	
32	B	
35	B	

MCR				
9	F	11		N41
10		12		C48
				C49

B-G POKR				
9	F	11	F	N41
10		12		C48

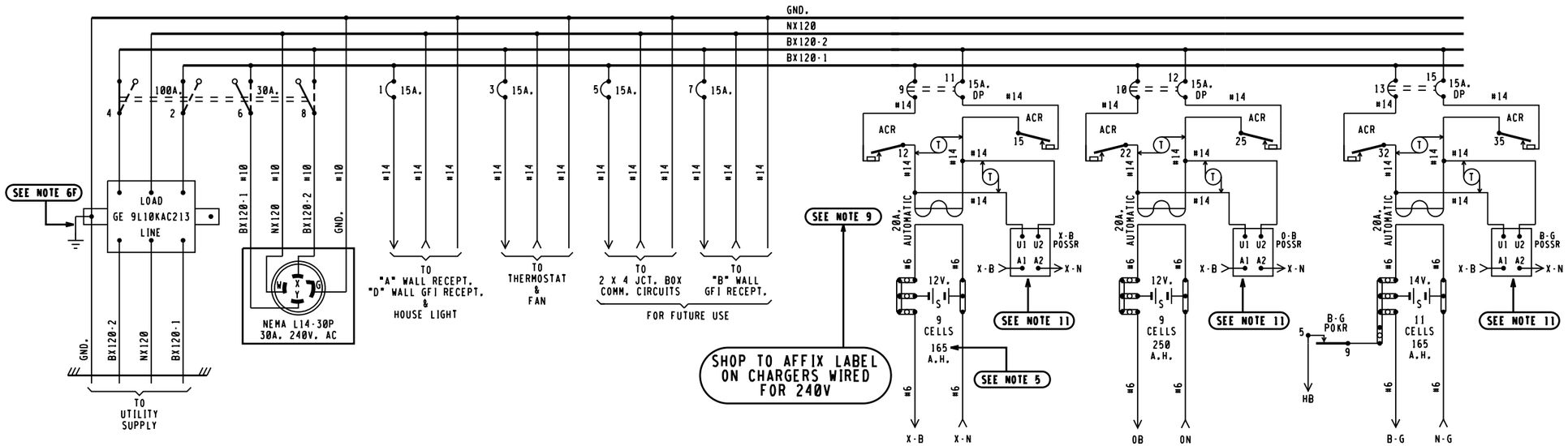

BX120-1	BX120-2
11.0 AMPS	11.0 AMPS

MAXIMUM LOAD CALCULATED PER SS360

X-B POSSR					OB POSSR					B-G POSSR				
11	F	21	F	N70	11	F	21	F	N70	11	F	21	F	N70

WALL/DIN RAIL MOUNTED

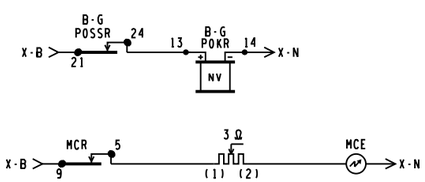

NOTES,

1 - REFERENCES ARE PER SCMS-13.
2 - ARRESTERS ARE PER SS382.
3 - SHELF RELAY PLACEMENT ON CONSIST CHART HAS NO SIGNIFICANCE.
4 - PLUG-IN RELAYS ARE VIEWED FROM THE FRONT OF RACK.
5 - BATTERY A.H. CAPACITY SHOWN IS THE MINIMUM REQUIREMENT.
6 - WIRING
  A - FEED TO ALL BUSSES, LIGHT CIRCUITS,MOTOR CIRCUITS TO BE #10 FLEX.
  B - 120-VOLT FEED FROM ENTRANCE TO POWER BUSS TO BE #10 FLEX.
  C - ALL TRACK WIRES TO BE #10 FLEX.
  D - ALL OTHERS TO BE #16 FLEX UNLESS NOTED.
  E - ALL BATTERY OUTPUTS TO BE #6 PER SS360.
  F - GROUND WIRE NOT NECESSARY WHEN GE ARRESTER IS MOUNTED ON GROUND PLANE OR METAL ENCLOSURE AFFIXED DIRECTLY TO BUNGALOW METALLIC STRUCTURAL MEMBER.
7 - CIRCUIT INTERRUPTERS 2 & 4 ARE MECHANICALLY INTERLOCKED WITH CIRCUIT INTERRUPTERS 6 & 8.
8 - LABEL ALL PRIMARY POWER WIRES WITH RED TAGS.
9 - CHARGERS WIRED FOR 240VAC
10 - CIRCUIT BREAKERS PANEL- 00124L125G (24 SPACES)
11 - SOLID STATE VOLTAGE MONITOR BENDER MOD. VME 420-D-1 DIN RAIL MOUNTED. OUTPUTS CONFIGURED NORMALLY CLOSED(NC). UNDERVOLTAGE SENSING MINIMUM OF 216 VOLTS AC.

: NOTE

NEW WORK
CXV1642087 IL2015028
05-31-16 XRL/DKD/
xorail

4000GCP.E01
REV. 09-04-15

6'X 6' PTC CROSSING HOUSE

REVISIONS

CSX TRANSPORTATION
RAIL TRANSPORT GROUP ENGINEERING
COMMUNICATIONS AND SIGNALS

W. 83RD PLACE 283146Y

POWER DISTRIBUTION
CHICAGO, IL M.P. DG-12.87

DESIGNED	DIGITIZED	CHECKED	DATE
XRL	XRL	XRL	05-31-16

DRAWING	SHEET NO	NEXT SH	NEXT FILE	NEXT SH	FILE	SHEET
.....	.....	.....	DG01280	C01	DG01280	E02

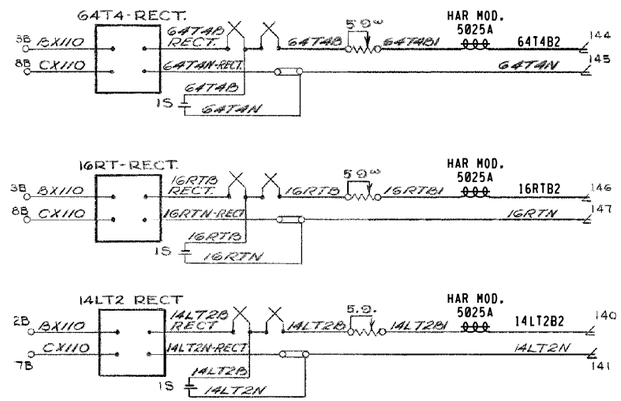

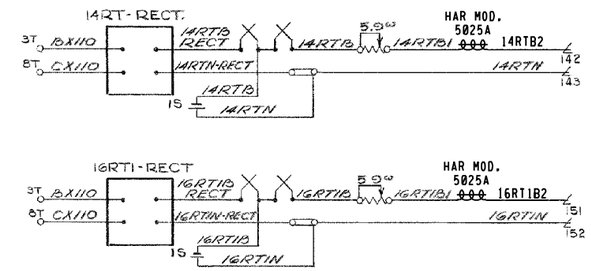

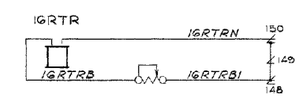

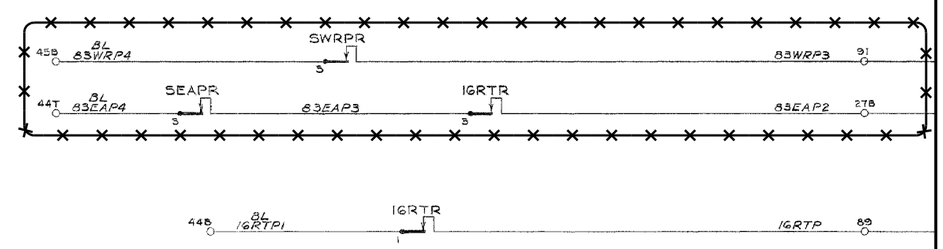

CROSSING CASE - COLUMBUS AVE.

XXX = OUT

CXV1642087 IL2015028
05-31-16 XRL/DKD/

xorail

REVISIONS	
07-20-07 MAB/PWW	
09-11-08 APL/RLC	
02-03-16 VECTOR CREATED BY XRL	IL2015033 IL2014004

CSX TRANSPORTATION
RAIL TRANSPORT GROUP ENGINEERING
COMMUNICATIONS AND SIGNALS

ASHBURN INTERLOCKING

CONTROL CIRCUITS
CHICAGO, IL M.P. DG-12.80

DESIGNED	DIGITIZED	CHECKED	DATE
CSX	XRL	CSX	02-03-16

DRAWING	SHEET NO	NEXT SH	NEXT FILE	NEXT SH	FILE	SHEET
.....	.....	.....	DG01280	C09	DG01280	C08

RASTER FILE: DG01280C08.CIT MS FILE: DG01280.C08

TERMINALS

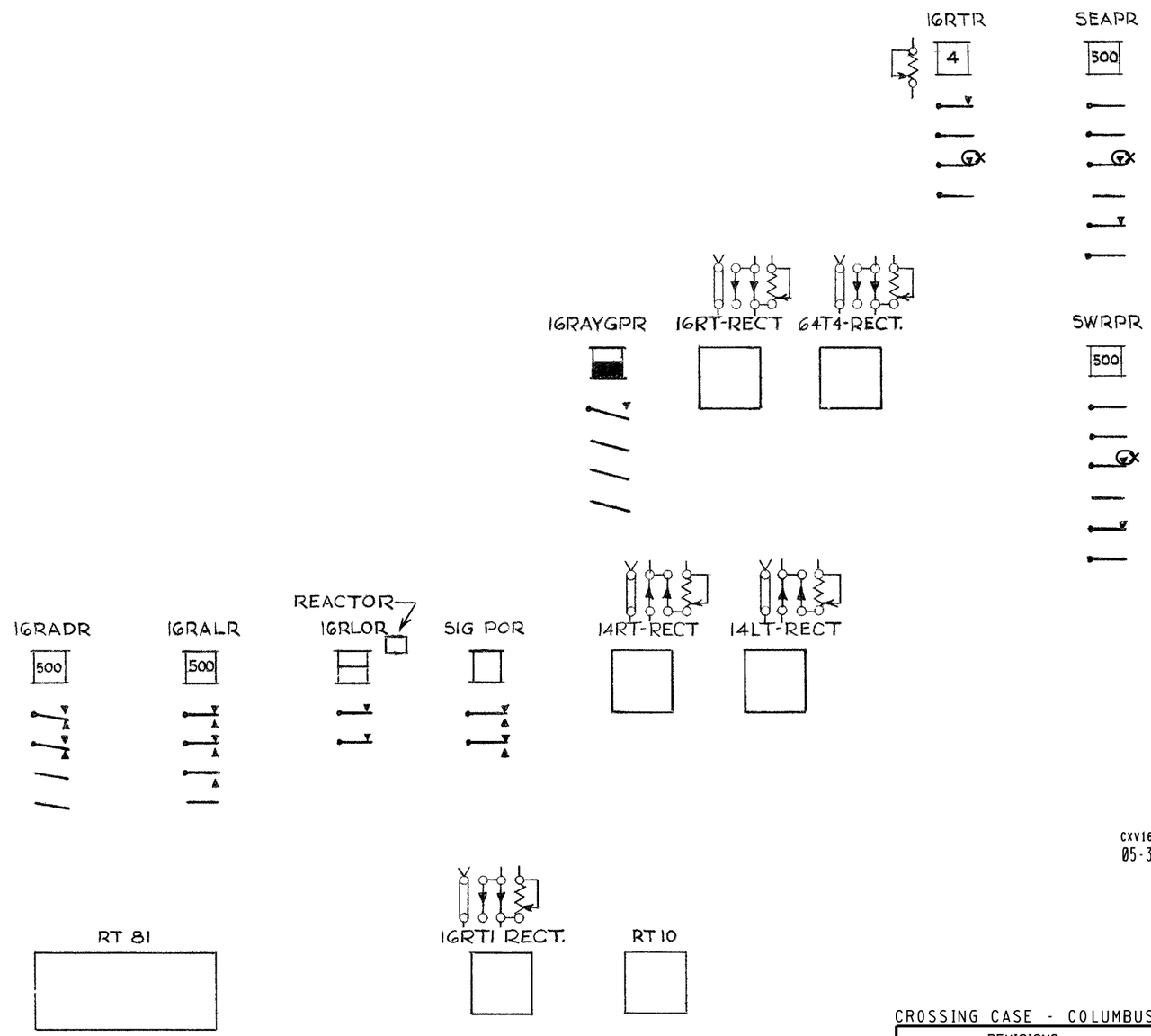

*** : OUT

CXV1642087 IL2015028
05-31-16 XRL/DKD/

xorail

CROSSING CASE - COLUMBUS AVE.

REVISIONS	
09-11-08 APL/RLC	
02-03-16 VECTOR CREATED BY XRL	IL2015033 IL2014004

CSX TRANSPORTATION
RAIL TRANSPORT GROUP ENGINEERING
COMMUNICATIONS AND SIGNALS

ASHBURN INTERLOCKING

RELAY LAYOUT
CHICAGO, IL M.P. DG-12.80

DESIGNED	DIGITIZED	CHECKED	DATE
CSX	XRL	CSX	02-03-16

DRAWING	SHEET NO	NEXT SH	NEXT FILE	NEXT SH	FILE	SHEET
.....	.....	.....	DG01280	C11	DG01280	C10

RASTER FILE, DG01280C10.CIT MS FILE, DG01280.C10

RELAYS & RECTS

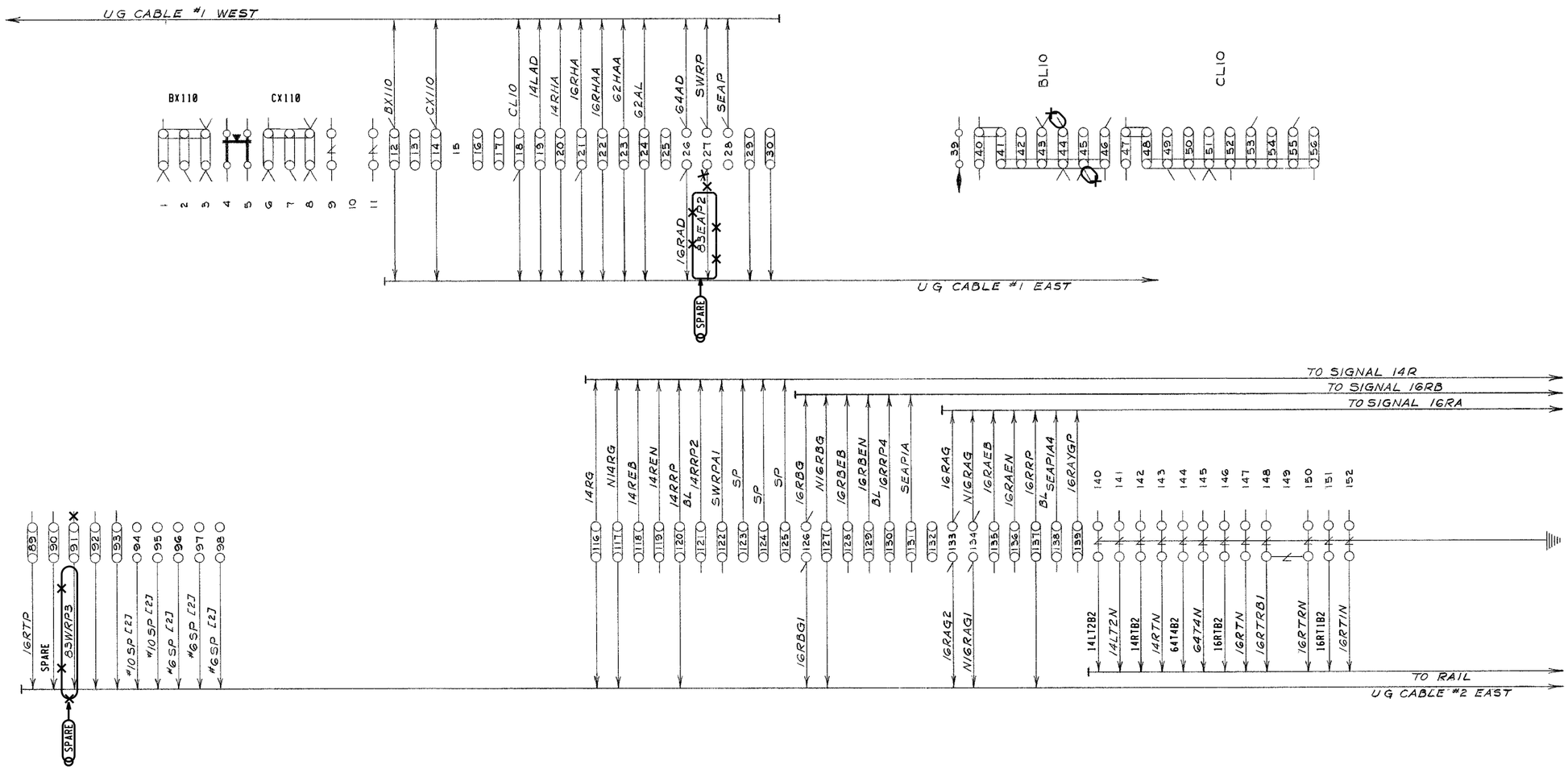

: IN
: OUT

CXV1642087 IL2015028
05-31-16 XRL/DKD/
xorail

CROSSING CASE - COLUMBUS AVE.

REVISIONS	
09-11-08 APL/RLC	
02-03-16 VECTOR CREATED BY XRL	IL2015033 IL2014004

CSX TRANSPORTATION
RAIL TRANSPORT GROUP ENGINEERING
COMMUNICATIONS AND SIGNALS

ASHBURN INTERLOCKING

TERMINAL BOARD LAYOUT
CHICAGO, IL M.P. DG-12.80

DESIGNED	DIGITIZED	CHECKED	DATE
CSX	XRL	CSX	02-03-16

DRAWING	SHEET NO	NEXT SH	NEXT FILE	NEXT SH	FILE	SHEET
.....	.....	.....	DG01280	C12	DG01280	C11

RASTER FILE: DG01280C11.CIT MS FILE: DG01280.C11

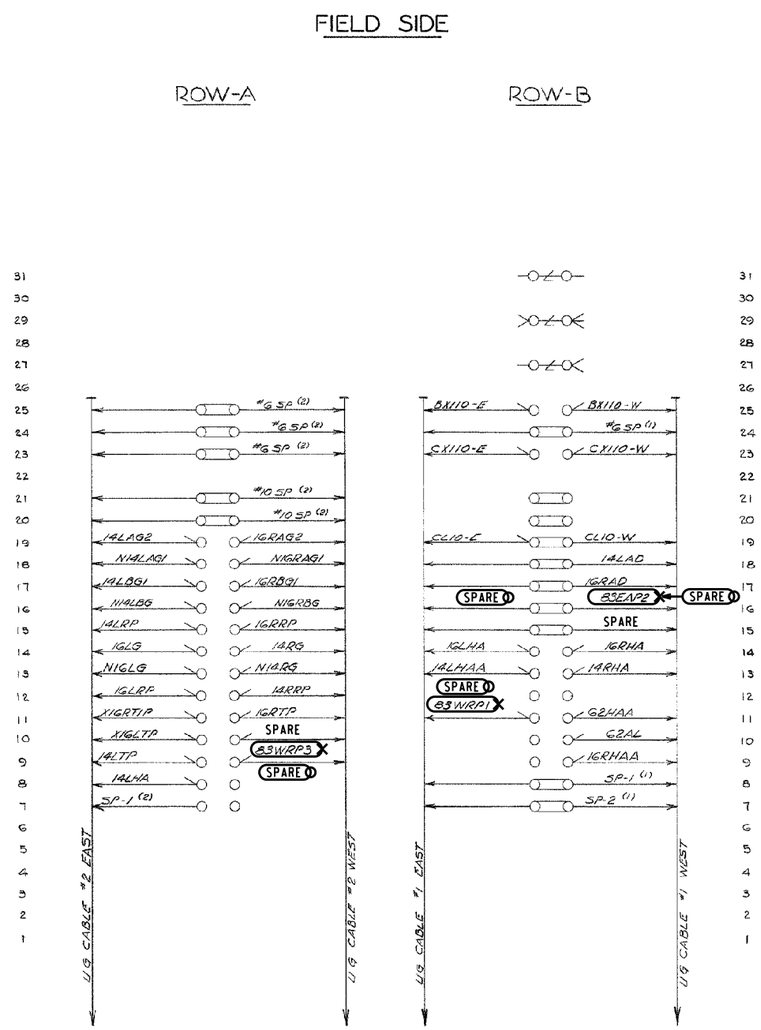

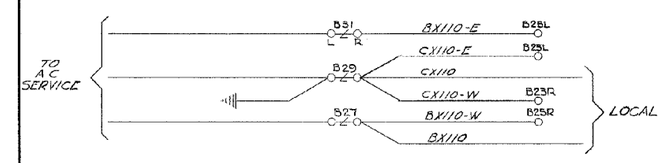

= IN
= OUT

CXV1642087 IL2015028
05-31-16 XRL/DKD/

xorail

CABLE JUNCTION BOX

REVISIONS	
09-11-08 APL/RLC	
02-03-16 VECTOR CREATED BY XRL	IL2015033 IL2014004

CSX TRANSPORTATION
RAIL TRANSPORT GROUP ENGINEERING
COMMUNICATIONS AND SIGNALS

ASHBURN INTERLOCKING

TERMINAL BOARD LAYOUT
CHICAGO, IL M.P. DG-12.80

DESIGNED	DIGITIZED	CHECKED	DATE
CSX	XRL	CSX	02-03-16

DRAWING	SHEET NO	NEXT SH	NEXT FILE	NEXT SH	FILE	SHEET
.....	.....	.....	DG01280	C13	DG01280	C12

RASTER FILE: DG01280C12.CIT MS FILE: DG01280.C12

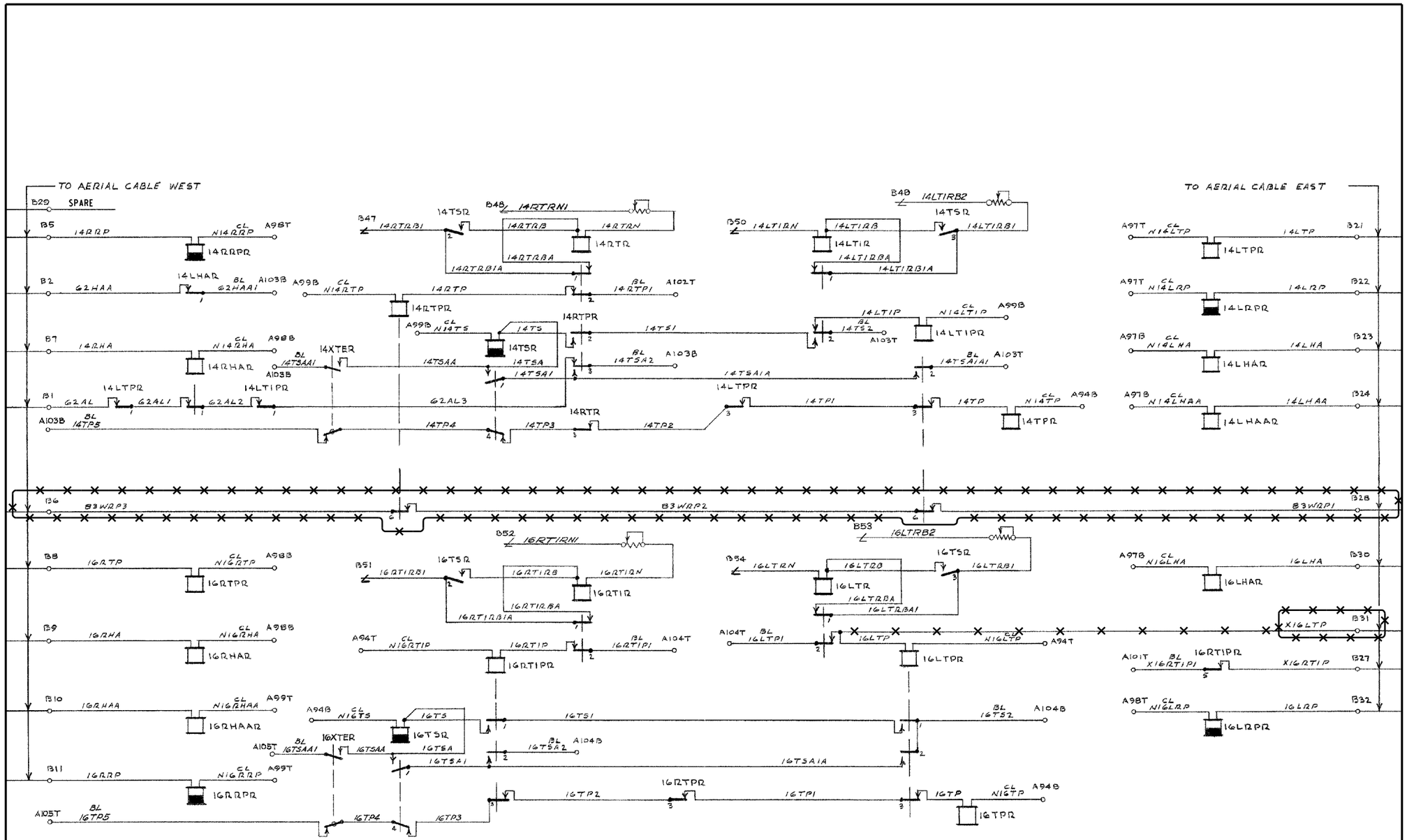

INTERLOCKING CASE

REVISIONS	
07-20-07 MAB/PWW	
09-11-08 APL/RLC	
02-03-16 VECTOR CREATED BY XRL	IL2015033 IL2014004

XXX = OUT

CXV1642087 05-31-16 IL2015028 XRL/DKD/

xorail

CSX TRANSPORTATION

RAIL TRANSPORT GROUP ENGINEERING
COMMUNICATIONS AND SIGNALS

ASHBURN INTERLOCKING

CONTROL CIRCUITS
CHICAGO, IL M.P. DG-12.80

DESIGNED	DIGITIZED	CHECKED	DATE
CSX	XRL	CSX	02-03-16

DRAWING	SHEET NO	NEXT SH	NEXT FILE	NEXT SH	FILE	SHEET
.....	.....	.....	DG01280	C14	DG01280	C13

RASTER FILE, DG01280C13.CIT MS FILE, DG01280.C13

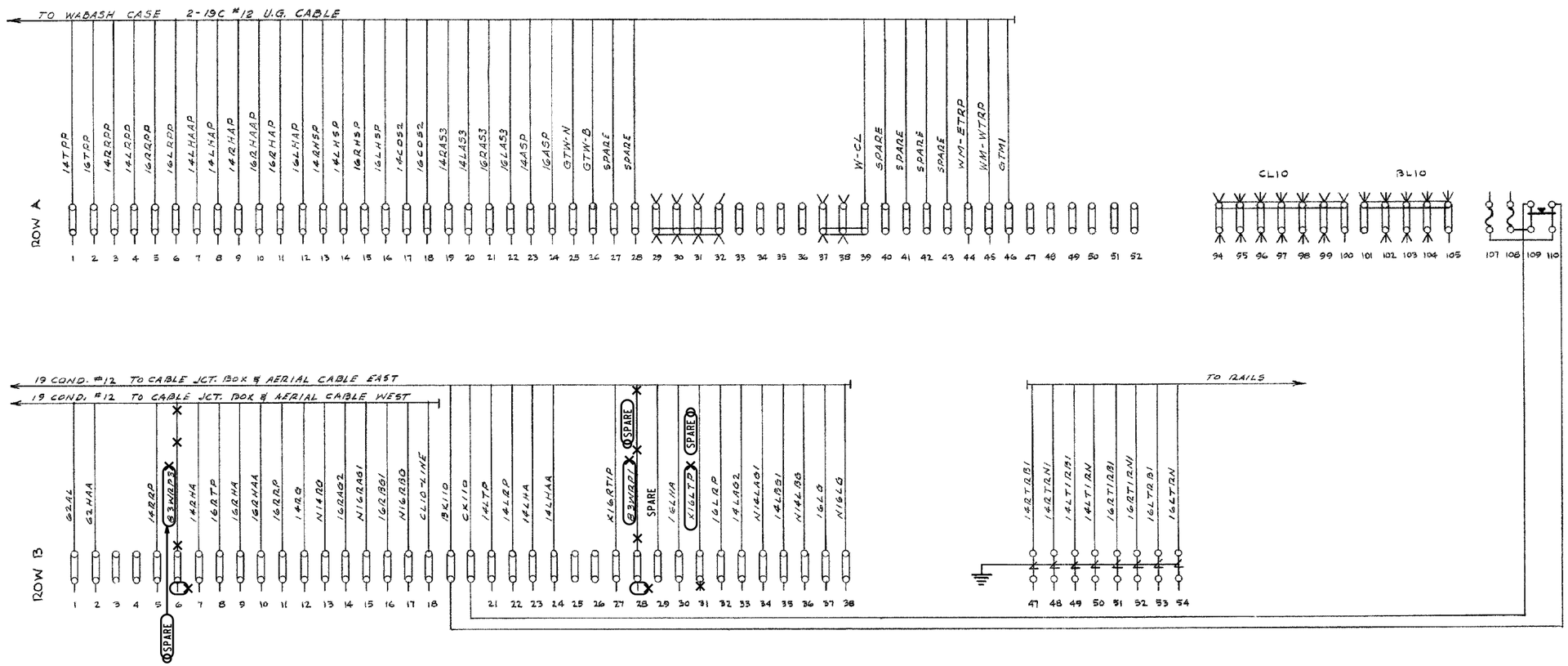

: IN

: OUT

CXV1642087 IL2015028

05-31-16 XRL/DKD/

xorail

INTERLOCKING CASE

REVISIONS	
09-11-08 APL/RLC	
02-03-16 VECTOR CREATED BY XRL	IL2015033 IL2014004

CSX TRANSPORTATION

RAIL TRANSPORT GROUP ENGINEERING
COMMUNICATIONS AND SIGNALS

ASHBURN INTERLOCKING

TERMINAL BOARD ARRANGEMENT
CHICAGO, IL M.P. DG-12.80

DESIGNED	DIGITIZED	CHECKED	DATE
CSX	XRL	CSX	02-03-16

DRAWING	SHEET NO	NEXT SH	NEXT FILE	NEXT SH	FILE	SHEET
.....	.....	.....	DG01280	C18	DG01280	C17

RASTER FILE, DG01280C17.CIT MS FILE, DG01280.C17

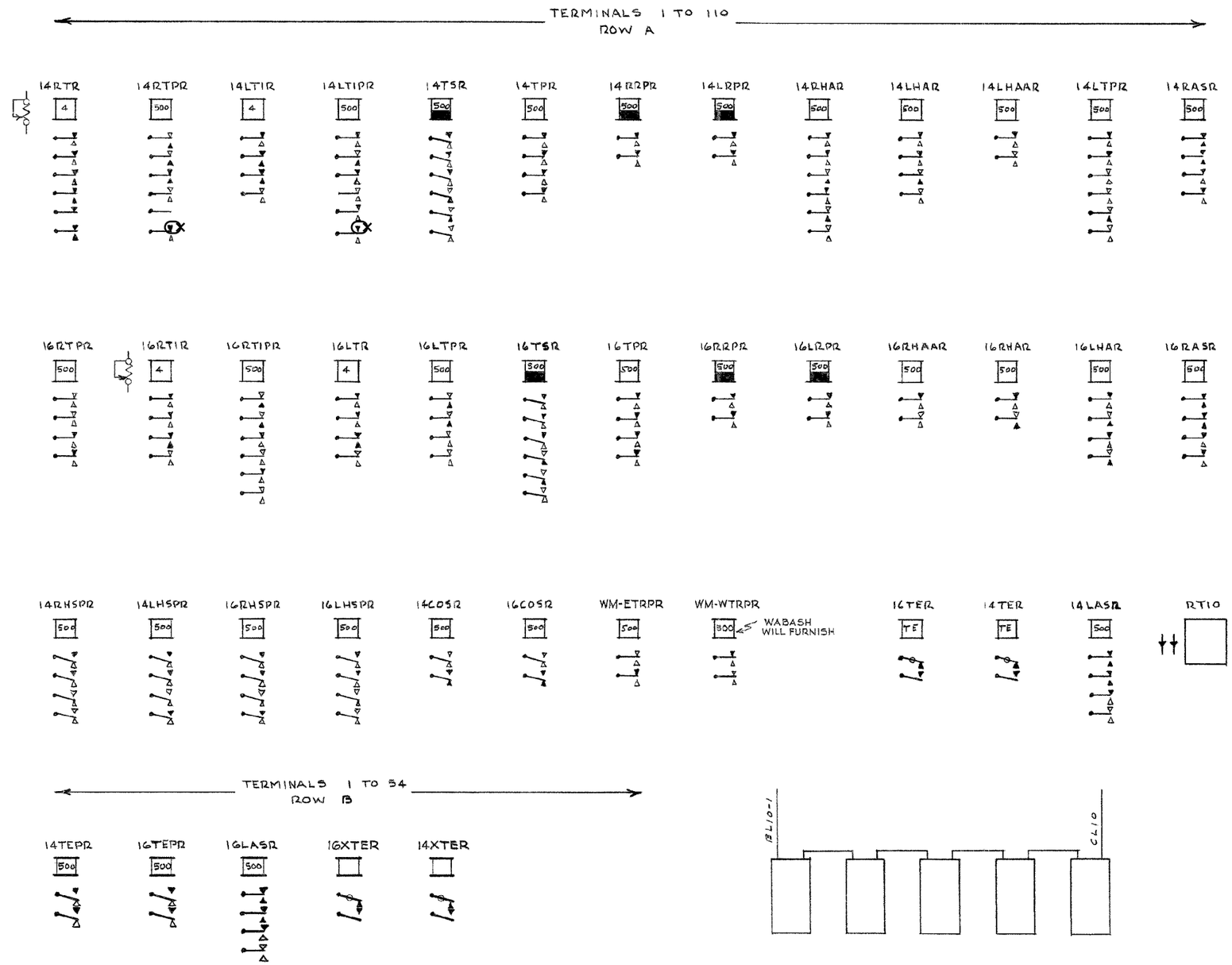

: IN
: OUT

CXV1642087 IL2015028
05-31-16 XRL/DKD/

xorail

INTERLOCKING CASE

REVISIONS	
09-11-08 APL/RLC	
02-03-16 VECTOR CREATED BY XRL	IL2015033 IL2014004

CSX TRANSPORTATION
RAIL TRANSPORT GROUP ENGINEERING
COMMUNICATIONS AND SIGNALS

ASHBURN INTERLOCKING

RELAY LAYOUT
CHICAGO, IL M.P. DG-12.80

DESIGNED	DIGITIZED	CHECKED	DATE
CSX	XRL	CSX	02-03-16

DRAWING	SHEET NO	NEXT SH	NEXT FILE	NEXT SH	FILE	SHEET
.....	.....	.....	DG01280	C19	DG01280	C18

RASTER FILE, DG01280C18.CIT MS FILE, DG01280.C18