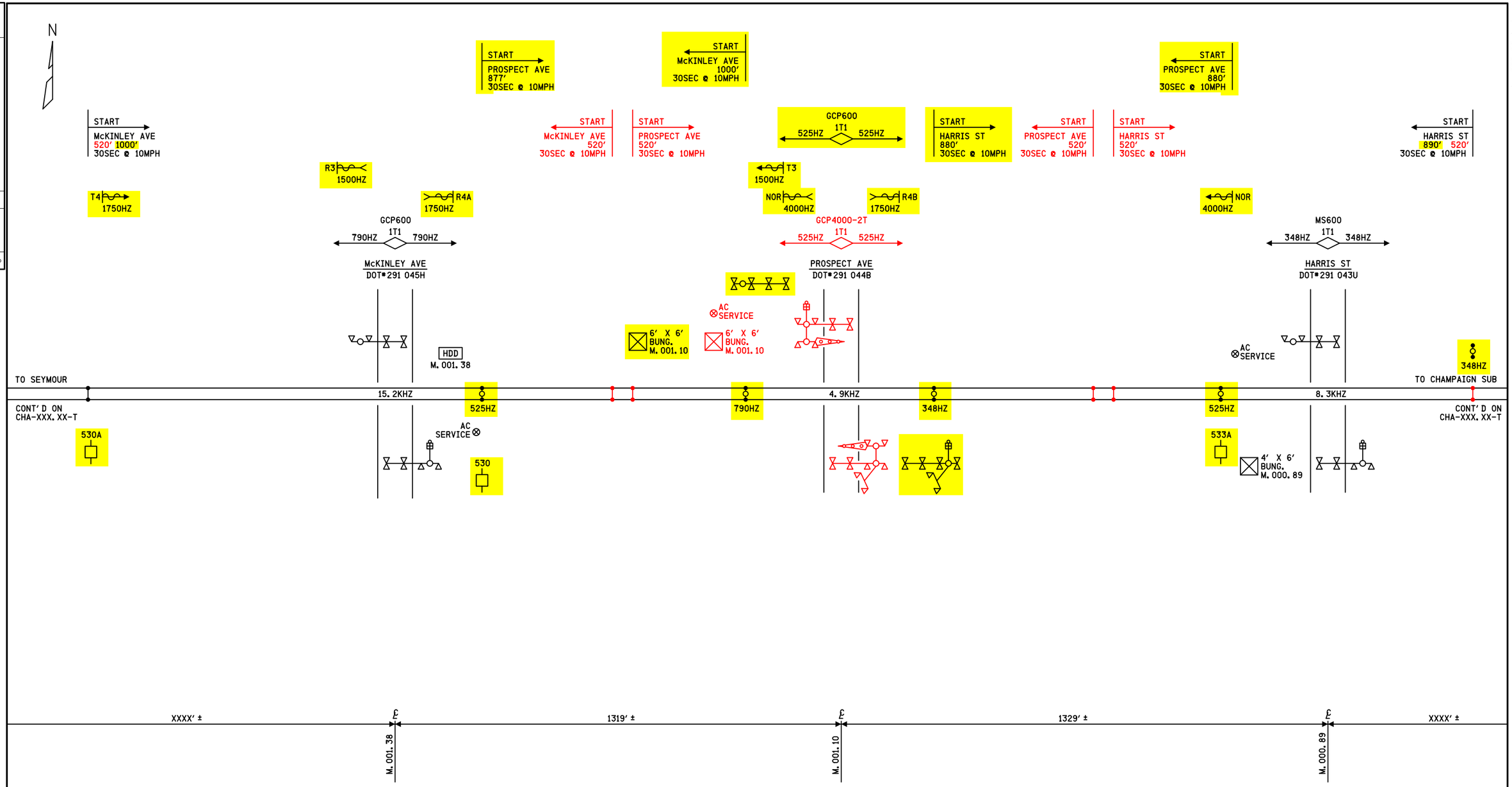

NOTES

1) ALL APPROACH DISTANCES MEASURED FROM TRACK LEADS

DENOTES #6 HARDWIRE SHUNT

DENOTES MULTIFREQUENCY NARROW-BAND SHUNT #62775-3497

SII 25 FEB 2016

PROPOSED
DESIGN NO. 14-0049
RED-IN YELLOW-OUT

AS INSTALLED
DATE _____
BY _____
(PRINT NAME)

PROPOSED D	M	Y	REVISIONS	D	C	COMPLETED D	M	Y	C
			PLAN REDRAWN			14	02	14	KLT
25	02	16	M. 001. 10 UPGRADE	NAD	BJW				

REGION SOUTHERN
SEYMOUR SPUR
SUB. CHAMPAIGN 341

SIGNALS AND COMMUNICATIONS HOMEWOOD
06 AUGUST 2007
DES.
CH.

TRACK PLAN
M. 000. 89 TO M. 001. 38

CHA-000. 89-T

REVISIONS				
NO.	DATE	BY	DESCRIPTION	APP. BY
1				
2				
3				
4				
5				

SIEMENS INDUSTRY INC

DES. : SJJ	DATE: 02/14/14	JOB NO. : PICA10764	
CKD. : NAD	ISSUE DATE: N/A	EST. NO. : 1QDXP08062	
DRN. : SJJ	PLAN NO. : N/A	SHEET 1 OF 1	
P TIME: 09:55	P DATE: 10-JUN-2016	CAD ID. : CHA-000. 89-T	

SIEMENS INDUSTRY INC
LOUISVILLE DIVISION, LOUISVILLE, KY

cha-000. 89-t. dgn
10-JUN-2016

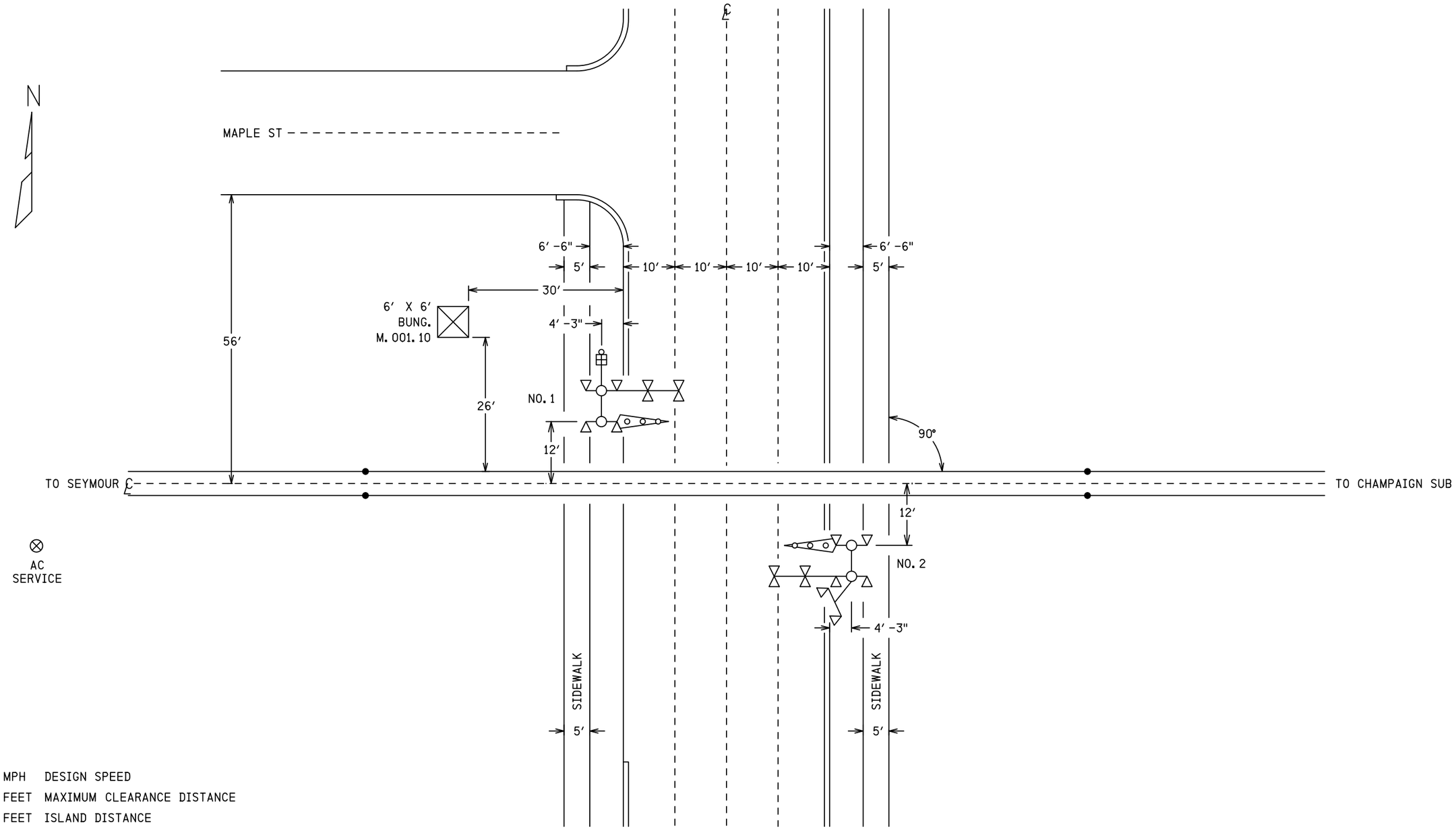

NOTES

1) 10 MPH DESIGN SPEED
2) 35 FEET MAXIMUM CLEARANCE DISTANCE
3) 140 FEET ISLAND DISTANCE
4) CONSTANT WARNING CONTROL
5) APPROACH CIRCUIT DISTANCE PROVIDES FOR:
   0 SEC CLEARANCE TIME
   0 SEC PREEMPTION TIME (0 SEC ADVANCE TIME)
   20 SEC MINIMUM WARNING TIME
   4 SEC GATE DESCENT DELAY
   10 SEC BUFFER TIME
   5 SEC EQUIPMENT REACTION TIME
6) 24 FEET NO. 1 GATE ARM LENGTH
   24 FEET NO. 2 GATE ARM LENGTH
7) 20 FEET NO. 1 CANTILEVER LENGTH
   20 FEET NO. 2 CANTILEVER LENGTH

SII 27 JAN 2016

PROPOSED
DESIGN NO. 14-0049
RED-IN YELLOW-OUT

AS INSTALLED
DATE _____
BY _____
(PRINT NAME)

PROPOSED D	M	Y	REVISIONS	D	C	COMPLETED D	M	Y	C

REGION SOUTHERN
SEYMOUR SPUR
SUB. CHAMPAIGN 341

SIGNALS AND COMMUNICATIONS HOMEWOOD
27 JANUARY 2016
DES. NAD
CH. BJW

SITUATION SKETCH
SCALE 1" = 20′
CHAMPAIGN, IL
PROSPECT AVE

CHA-001.10-0

DOT#291 044B

18

SIEMENS INDUSTRY INC
LOUISVILLE DIVISION, LOUISVILLE, KY

cha-000.89-0.dgn
10-JUN-2016

REVISIONS			
NO.	DATE	BY	DESCRIPTION	APP. BY
1				
2				
3				
4				
5				

FLASHING LIGHT UNITS ALIGNMENT TABLE

PRIMARY FRONT LIGHTS FOR VEHICLES							
SIG #	LIGHT #	ROUNDEL		ROAD SPEED	MINIMUM DISTANCE	RECOMMENDED DISTANCE	ALIGNMENT DISTANCE
		SIZE	TYPE	MPH	FT	FT	FT
1	1,2	12"	LED	35	325	550	
2	7,8	12"	LED	35	325	550	
1	15,16	12"	LED	35	325	550	
2	21,22	12"	LED	35	325	550	
BACK LIGHTS FOR VEHICLES							
SIG #	LIGHT #	ROUNDEL		ROAD SPEED	MINIMUM DISTANCE	RECOMMENDED DISTANCE	ALIGNMENT DISTANCE
		SIZE	TYPE	MPH	FT	FT	FT
1	3,4	12"	LED	N/A	N/A	N/A	50
2	5,6	12"	LED	N/A	N/A	N/A	50
1	17,18	12"	LED	N/A	N/A	N/A	50
2	19,20	12"	LED	N/A	N/A	N/A	50
INTERMEDIATE FRONT LIGHTS FOR VEHICLES							
SIG #	LIGHT #	ROUNDEL		ROAD SPEED	MINIMUM DISTANCE	RECOMMENDED DISTANCE	ALIGNMENT DISTANCE
		SIZE	TYPE	MPH	FT	FT	FT
2	23,24	12"	LED	35	325	550	

NOTE
FIELD IS TO PROVIDE THE ACTUAL ALIGNMENT DISTANCE AS DETERMINED BY
SCP-706: ROAD CROSSING DEVICE LIGHT UNIT ALIGNMENT PROCEDURES

BUNGALOW

3C*6 TECK90	C1	TO SERVICE
2SC*6TW	C2	TO TRACK
2SC*6TW	C3	TO TRACK
16C(7*6,9*14)	C4	TO SIG NO. 1
16C(7*6,9*14)	C5	TO SIG NO. 2

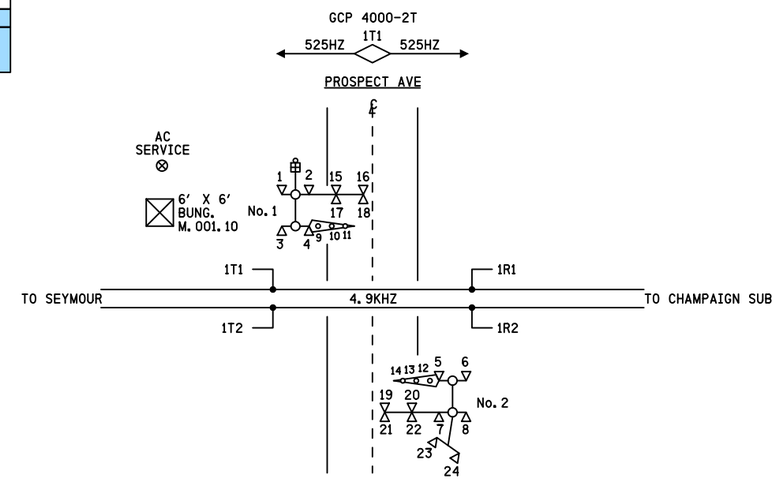

CONTENT	SHEET NO.
SITUATION SKETCH	0
TRACK LAYOUT & INDEX	01
GCP 4000 CHASSIS & MODULE LAYOUT	02
GCP 4000 PROGRAM INFORMATION	03
GCP 4000/SEAR III SETUP & PROGRAM	04
GCP 4000 CALIBRATION HISTORY	05
GCP 4000 TRACK 1 & 2 MODULE CONNECTIONS	06
GCP 4000 CPUII+ & RAILFUSION	07
GCP 4000 SEAR III WITH GFT	08
GCP 4000/SSCCIIII GATE CONTROLLERS W/ ILODS	09
GATE 1 MECH. CONTROL CIRCUITS SAFETRAN S-60	10
GATE 2 MECH. CONTROL CIRCUITS SAFETRAN S-60	11
DC DISTRIBUTION	12
AC DISTRIBUTION	13
BUNGALOW LAYOUT TOP VIEW	14
BUNGALOW LAYOUT SIDE D & L.I.G.P. INSIDE	15
ENTRANCE BOARD L.I.G.P. OUTSIDE	16
BUNGALOW LAYOUT SIDES A, B & C	17

cha-001.10-01.dgn
10-JUN-2016

SIEMENS INDUSTRY INC

DES.: KLT	DATE: 02/14/14	JOB NO.: PICA10764	
CKD.: BJW	ISSUE DATE: N/A	EST. NO.: QDXP08062	
DRN.: KLT	PLAN NO.: N/A	SHEET 1 OF 17	
P TIME: 09:55	P DATE: 10-JUN-2016	CAD ID.: CHA-001.10-01	

SII 25 FEB 2016

TO BE CONFIRMED

CONFIRMED
DATE _____
BY _____
(PRINT NAME)

PROPOSED
DESIGN NO. 14-0049
RED-IN YELLOW-OUT

AS INSTALLED
DATE _____
BY _____
(PRINT NAME)

PROPOSED			REVISIONS	D	C	COMPLETED			C
D	M	Y				D	M	Y	

REGION SOUTHERN
SEYMOUR SPUR
SUB. CHAMPAIGN 341

SIGNALS AND COMMUNICATIONS HOMEWOOD
DES. NAD
CH. MRB
25 FEBRUARY 2016

TRACK LAYOUT & INDEX

CHAMPAIGN, IL
PROSPECT AVE

CHA-001.10-01

DOT#291 044B

SIEMENS INDUSTRY INC
LOUISVILLE DIVISION, LOUISVILLE, KY

REVISIONS				
NO.	DATE	BY	DESCRIPTION	APP. BY
1				
2				
3				
4				
5				

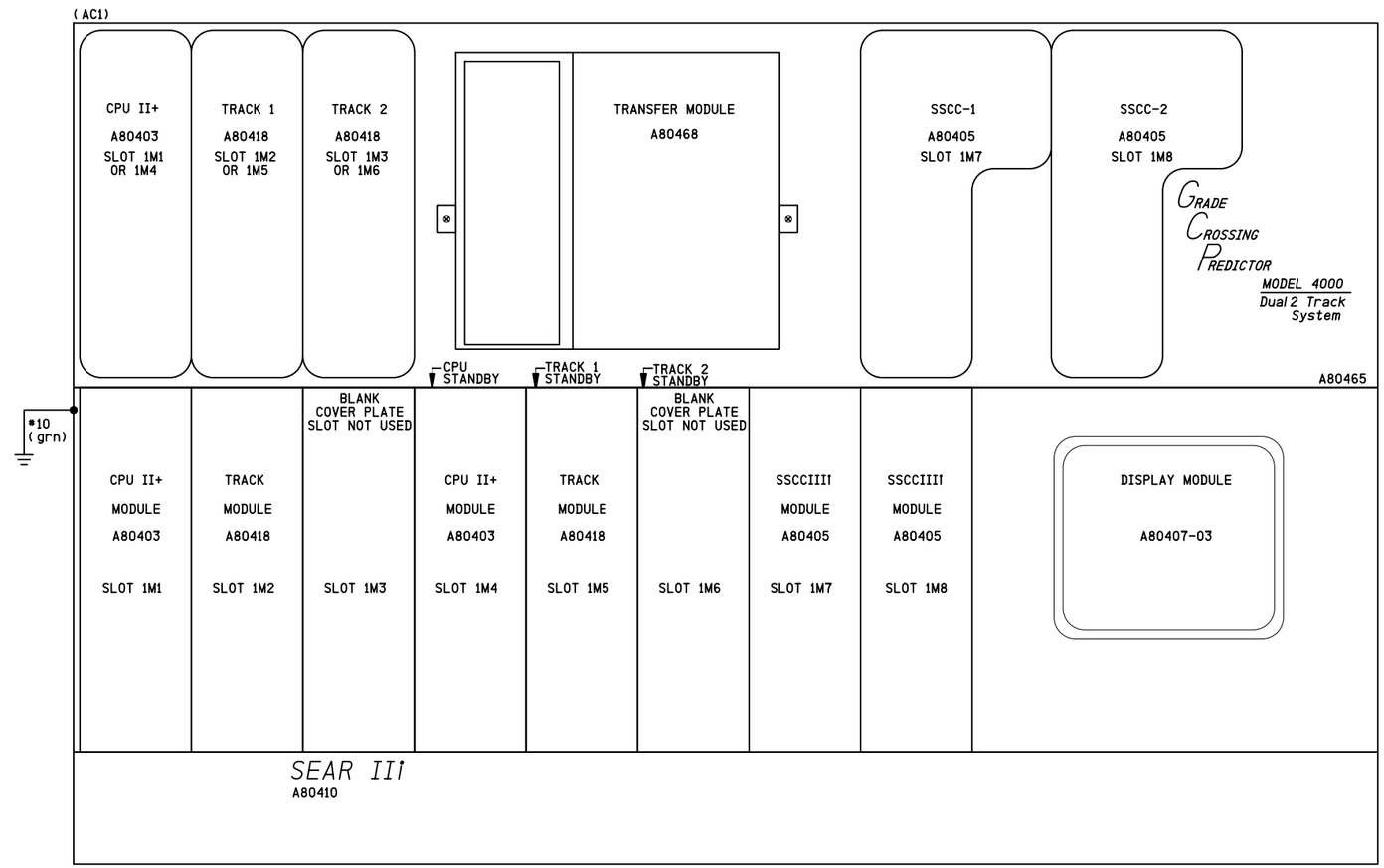

NOTES

1) DISABLE THE DISPLAY HEATER BY REMOVING JUMPER J-22 (LOCATED AT THE EDGE OF THE DISPLAY MODULE CARD THAT PLUGS INTO THE CHASSIS)

2) SET THE TRANSFER INTERVAL TIME TO 3 MINUTES BY SETTING DIPSWITCH S3 (LOCATED IN THE UPPER LEFT CORNER OF THE TRANSFER MODULE CARD) TO:

S3-0	S3-1	S3-2	S3-3	S3-4
1	1	0	0	0

WHERE 0 = UP/OPEN
1 = DOWN/CLOSED

ATTENTION!

ENSURE THE DISPLAY MODULE HEATER IS DISABLED
LEAVING THE DISPLAY HEATER ENABLED WILL REDUCE THE AMOUNT OF BATTERY STANDBY TIME IN THE EVENT OF AN AC POWER FAILURE

HEATER FUNCTION IS JUMPER SELECTABLE ON THE DISPLAY MODULE BOARD
THREE OPTIONS ARE AVAILABLE
NORMAL LCD HTR (DEFAULT)
HI CURRENT
NO JUMPER (HEATER DISABLED)

SII 25 FEB 2016

PROPOSED
DESIGN NO. 14-0049
RED-IN YELLOW-OUT

AS INSTALLED
DATE _____
BY _____
(PRINT NAME)

PROPOSED			REVISIONS	D	C	COMPLETED			C
D	M	Y				D	M	Y	

REGION SOUTHERN
SEYMOUR SPUR
SUB. CHAMPAIGN 341

SIGNALS AND COMMUNICATIONS HOMEWOOD
25 FEBRUARY 2016
DES. NAD
CH. MRB

GCP 4000
CHASSIS & MODULE LAYOUT
CHAMPAIGN, IL
PROSPECT AVE

CHA-001.10-02

DOT#291 044B

SIEMENS INDUSTRY INC

DES.: KLT	DATE: 02/14/14	JOB NO.: PICA10764	
CKD.: BJW	ISSUE DATE: N/A	EST. NO.: GDXP08062	
DRN.: KLT	PLAN NO.: N/A	SHEET 2 OF 17	
P TIME: 09:55	P DATE: 10-JUN-2016	CAD ID.: CHA-001.10-02	

SIEMENS INDUSTRY INC
LOUISVILLE DIVISION, LOUISVILLE, KY

cha-001.10-02.dgn
10-JUN-2016

REVISIONS				
NO.	DATE	BY	DESCRIPTION	APP. BY
1				
2				
3				
4				
5				

Program Report

Location and SIN

DOT Number: 291044B
Milepost Number: 001.10
Site Name: PROSPECT AVE

SIN: 710334100116

MCF and Template Selection

MCF Name: GCP-T6X-02-2.mcf
MCF Revision: 022
MCFCRC: 79225F13

Template = 1A:6 Trk Bi (OCCN)

Check Numbers

Office Check Number: 511C89A7
Config. Check Number: 419FC322
(Based on MCF Revision 022)

Program

BASIC: module configuration
Track 1/PSO 1 Slot = Track (OCCN)
Track 2/RIO 1 Slot = Not Used (OCCN)
Track 3/PSO 2 Slot = Not Used (OCCN)
Track 4/PSO 3 Slot = Not Used (OCCN)
Track 5/RIO 2 Slot = Not Used (OCCN)
Track 6/RIO 3 Slot = Not Used (OCCN)
SSCC-1 Slot = SSCC31 (OCCN)
SSCC-2 Slot = SSCC31 (OCCN)
SEAR Used = Yes (OCCN)

BASIC: MS/GCP operation
Track 1 : MS/GCP Operation = Yes (OCCN)

BASIC: Island operation
Track 1 : Island Used = Internal (OCCN)

BASIC: preemption
Preempt Logic = No (OCCN)

BASIC: radio Dax links
Radio DAX link A Used = No (OCCN)
Radio DAX link B Used = No (OCCN)

BASIC: Vital Comms links
Vital Comms link 1 Used = No (OCCN)
Vital Comms link 2 Used = No (OCCN)

PREDICTORS: track 1
Track 1 : Prime Used = Yes (OCCN)
Track 1 : Dax A Used = No (OCCN)
Track 1 : Dax B Used = No (OCCN)
Track 1 : Dax C Used = No (OCCN)
Track 1 : Dax D Used = No (OCCN)
Track 1 : Dax E Used = No (OCCN)
Track 1 : Dax F Used = No (OCCN)
Track 1 : Dax G Used = No (OCCN)

GCP: track 1
Track 1 : GCP Freq Category = Standard (Field)
Track 1 : GCP Frequency = 525 Hz (Field, TCN)
Track 1 : Approach Distance = 520 ft (Field, TCN)
Track 1 : Uni/Bi/Sim-Bidirni = Bidirni (OCCN, TCN)
Track 1 : GCP Transmit Level = High (Field, TCN)
Track 1 : Island Connection = Isl1 (OCCN)
Track 1 : Directionally Wired = No (OCCN)
Track 1 : Island Distance = 140 ft (Field, TCN)
Track 1 : Computed Distance = 9999 ft (Field, TCN)
Track 1 : Linearization Steps = 100 (Field, TCN)

GCP: track 1 enhanced det
Track 1 : Inbound PS Sensitivity = High (Field)
Track 1 : Speed Limiting Used = Yes (Field)
Track 1 : Outbound False Act Lvl = Normal (Field)
Track 1 : Outbound PS Timer = 20 sec (Field)
Track 1 : Trailing Switch Logic = On (Field)
Track 1 : Post Joint Detn Time = 15 sec (OCCN)
Track 1 : Adv Appr Predn = No (OCCN)
Track 1 : Cancel Pickup Delay = This Isl (OCCN)

GCP: track 1 BIDAX RX
Track 1 : BIDAX To RX Appr = Not Used (OCCN)

GCP: track 1 BIDAX TX
Track 1 : BIDAX To TX Appr = Not Used (OCCN)

GCP: track 1 prime
Track 1 : Prime Warning Time = 30 sec (OCCN)
Track 1 : Prime Offset Distance = 0 ft (Field)
Track 1 : Switch MS EZ Level = 50 (OCCN)
Track 1 : Prime MS/GCP Mode = Pred (OCCN)
Track 1 : Prime Pickup Delay = 30 sec (OCCN)
Track 1 : Prime UAX = Not Used (OCCN)

GCP: track 1 pos start
Track 1 : Positive Start = Off (OCCN)
Track 1 : Sudden Shnt Det Used = No (OCCN)
Track 1 : Low EZ Detection Used = Yes (OCCN)
Track 1 : Low EZ Detection Level = 70 (Field)
Track 1 : Low EZ Detection Time = 15 min (OCCN) (NOTE 5)
Track 1 : Low EZ Det Effect = Actvate (OCCN)
Track 1 : Low EZ Det Override IP = No (OCCN)

GCP: track 1 MS Control
Track 1 : MS/GCP Ctrl IP Used = No (OCCN)
Track 1 : MS Sensitivity Level = 0 (Field)
Track 1 : Compensation Level = 1300 (Field, TCN)
Track 1 : Warn Time-Ballast Comp = High (Field, TCN)
Track 1 : Low EX Adjustment = 39 (Field)
Track 1 : Bidirn Dax Passthru = No (OCCN)
Track 1 : False Act on Train Stop = No (Field)
Track 1 : EX Limiting Used = Yes (Field)
Track 1 : EZ Correction Used = Yes (Field)

ISLAND: track 1
Track 1 : Isl Frequency = 4.9 kHz (Field)
Track 1 : Pickup Delay (2s +) = 0 sec (OCCN)
Track 1 : Isl Enable IP Used = No (OCCN)

AND: track Anding
AND 1 XR Used = Yes (OCCN)
AND 2 Used = No (OCCN)
AND 3 Used = No (OCCN)
AND 4 Used = No (OCCN)
AND 5 Used = No (OCCN)
AND 6 Used = No (OCCN)
AND 7 Used = No (OCCN)
AND 8 Used = No (OCCN)

AND: AND 1 XR
AND 1 XR Track 1 = Prime (OCCN)
AND 1 Enable Used = Yes (OCCN)
And 1 Enable Pickup = 0 sec (OCCN)
AND 1 Enable Drop = 0 sec (OCCN)
AND 1 Wrap Used = No (OCCN)

ADVANCED: MS restart
MS/GCP Restart Used = No (OCCN)

ADVANCED: out of service
OOS Control = OOS IPs (OCCN)

ADVANCED: out of service 2
T1 OOS Control = OOS Input 1 (OCCN)
T1 OOS Controls = GCP and Island (OCCN)

ADVANCED: track wrap circuits
Wrap LOS Timer = 5 sec (OCCN)
Track 1 Wrap Used = No (OCCN)

ADVANCED: trk 1 overrides
Track 1 : All Predictors Override Used = No (OCCN)

ADVANCED: OR logic
OR 1 Used = No (OCCN)
OR 2 Used = No (OCCN)
OR 3 Used = No (OCCN)
OR 4 Used = No (OCCN)

ADVANCED: Internal I/O 1
Pass Thrus = No (OCCN)
Int.1 Sets = Not Used (OCCN)
Int.1 Set by = Not Used (OCCN)
Int.2 Sets = Not Used (OCCN)
Int.2 Set by = Not Used (OCCN)
Int.3 Sets = Not Used (OCCN)
Int.3 Set by = Not Used (OCCN)
Int.4 Sets = Not Used (OCCN)
Int.4 Set by = Not Used (OCCN)

ADVANCED: Internal I/O 2
Int.5 Sets = Not Used (OCCN)
Int.5 Set by = Not Used (OCCN)
Int.6 Sets = Not Used (OCCN)
Int.6 Set by = Not Used (OCCN)
Int.7 Sets = Not Used (OCCN)
Int.7 Set by = Not Used (OCCN)
Int.8 Sets = Not Used (OCCN)
Int.8 Set by = Not Used (OCCN)

ADVANCED: Internal I/O 3
Int.9 Sets = Not Used (OCCN)
Int.9 Set by = Not Used (OCCN)
Int.10 Sets = Not Used (OCCN)
Int.10 Set by = Not Used (OCCN)
Int.11 Sets = Not Used (OCCN)
Int.11 Set by = Not Used (OCCN)
Int.12 Sets = Not Used (OCCN)
Int.12 Set by = Not Used (OCCN)

ADVANCED: Internal I/O 4
Int.13 Sets = Not Used (OCCN)
Int.13 Set by = Not Used (OCCN)
Int.14 Sets = Not Used (OCCN)
Int.14 Set by = Not Used (OCCN)
Int.15 Sets = Not Used (OCCN)
Int.15 Set by = Not Used (OCCN)
Int.16 Sets = Not Used (OCCN)
Int.16 Set by = Not Used (OCCN)

ADVANCED: site options
Daylight Savings = On (Field)
Units = Standard (OCCN)
Maint Call Rpt IP Used = No (OCCN)
Emergency Activate IP = No (OCCN)
EZ/EX Logging = Change (Field)
EZ/EX Point Change = 3 (Field)

SSCC
Gates Used = Yes (OCCN)
SSCC1+2 GPs Coupled = Yes (OCCN)
Min Activation = 20 sec (OCCN)
Rmt Activation Cancel = 3 min (OCCN)
Bell On Gate Rising = No (OCCN)
Mute Bell On Gate Down = Yes (OCCN)
SSCCIV Controller Used = No (OCCN)

SSCC: 1
SSCC-1 Activation = AND 1 XR (OCCN)
SSCC-1 Gate Delay = 4 sec (OCCN)
SSCC-1 Number of GPs = 1 (OCCN)
SSCC-1 Number of GDs = 1 (OCCN)
SSCC 1 : Flash Rate = 55 (OCCN)
SSCC 1 : Low Battery Detection = No (Field)
SSCC 1 : Flash Sync = master (OCCN)
SSCC 1 : Invert Gate Output = No (OCCN)
SSCC 1 : Lamp Neutral Test = Off (Field)
Aux-1 Xng Ctrl Used = No (OCCN)

SSCC: 2
SSCC-2 Activation = AND 1 XR (OCCN)
SSCC-2 Gate Delay = 4 sec (OCCN)
SSCC-2 Number of GPs = 0 (OCCN)
SSCC-2 Number of GDs = 1 (OCCN)
SSCC 2 : Flash Rate = 55 (OCCN)
SSCC 2 : Low Battery Detection = No (Field)
SSCC 2 : Flash Sync = slave (OCCN)
SSCC 2 : Invert Gate Output = No (OCCN)
SSCC 2 : Lamp Neutral Test = Off (Field)
Aux-2 Xng Ctrl Used = No (OCCN)

OUTPUT: assignment page 1
OUT 1.1 = Not Used (OCCN)
OUT 1.2 = Not Used (OCCN)

INPUT: assignment page 1
IN 1.1 = Not Used (OCCN)
IN 1.2 = Not Used (OCCN)

IO: assignment SSCC
OUT GC 1 = Gate Output 1 (OCCN)
OUT GC 2 = Gate Output 2 (OCCN)
IN 7.1 = AND 1 XR Enable (OCCN)
IN 7.2 = Not Used (OCCN)
IN 7.3 = Not Used (OCCN)
IN 7.4 = GD 1.1 (OCCN)
IN 7.5 = GP 1.1 (OCCN)
IN 8.1 = Out Of Service IP 1 (OCCN)
IN 8.2 = Not Used (OCCN)
IN 8.3 = Not Used (OCCN)
IN 8.4 = GD 2.1 (OCCN)
IN 8.5 = Not Used (OCCN)

SEAR
SEAR Subnode = 99 (OCCN)
DI 1 = General1 (OCCN)
DI 2 = Gnd Flt Tester 1 (OCCN)
Rly 1 = Ground Fault Test (OCCN)
Rly 2 = AC Control (OCCN)

SEAR: Inputs
SP 2.1 = POK 1 (OCCN)
SP 3.1 = Not Used (OCCN)
SP 4.1 = Not Used (OCCN)
SP 5.1 = Not Used (OCCN)
SP 6.1 = Not Used (OCCN)

SEAR: slot 1-4 Inputs
IN 1.1 = Not Used (OCCN)
IN 1.2 = Not Used (OCCN)
IN 2.1 = Not Used (OCCN)
IN 2.2 = POK 2 (OCCN)
IN 3.1 = Not Used (OCCN)
IN 3.2 = Not Used (OCCN)
IN 4.1 = Not Used (OCCN)
IN 4.2 = Not Used (OCCN)

SEAR: Inputs slot 5
IN 5.1 = Not Used (OCCN)
IN 5.2 = Not Used (OCCN)

SEAR: Inputs slot 6
IN 6.1 = Not Used (OCCN)
IN 6.2 = Not Used (OCCN)

SEAR: slot 7-8 Inputs
IN 7.2 = Not Used (OCCN)
IN 7.3 = TSS 1 (OCCN)
IN 8.2 = Not Used (OCCN)
IN 8.3 = TSS 2 (OCCN)
IN 8.5 = General2 (OCCN)

SITE: programming
Radio Subnode = 1 (Field)
Field Password = Off (OCCN)
Low Battery Enabled = Off (Field)

Configuration Package File

Filename: cha-001.10.pac

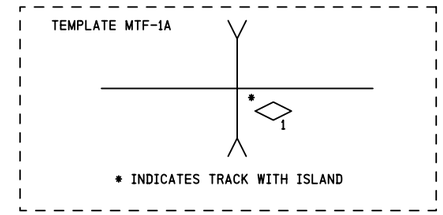

NOTES
1) DISTANCE(S) TO BE VERIFIED AT INSTALLATION
INDICATE SELECTED PROGRAMMED VALUE IF DIFFERENT THAN SHOWN
REFER TO 4000 GCP INSTRUCTION/INSTALLATION MANUAL
FOR PROGRAMMING PARAMETERS
2) PROGRAM TEXT HIGHLIGHTED IN RED INDICATES 4000 PROGRAM
MODIFICATIONS TO DEFAULT PROGRAM VALUES
3) EACH CONSTANT WARNING DEVICE SYSTEM TO BE PROGRAMMED TO
CONVERT TO A MOTION SENSOR 300 FEET FROM EDGE OF ROAD
TRAVELLED WAY
SHUNT TRACK 300 FEET FROM EDGE OF ROAD TRAVELLED WAY
AND NOTE "EZ" VALUE
PROGRAM EACH SYSTEM WITH THE INDICATED "EZ" VALUE +2
4) VERIFY SET TIMER VALUE TO MATCH ACTUAL TRAIN MOVEMENT
WITHIN THE CROSSING APPROACH CIRCUITS
5) LOW EZ DETECTION TIME MUST BE ADJUSTED ACCORDING TO THE TRAIN OPERATION.
FOR TRAIN OPERATION, REFER TO THE DEPARTMENT OF TRANSPORTATION.

SII 25 FEB 2016

PROPOSED
DESIGN NO. 14-0049
RED-IN YELLOW-OUT

AS INSTALLED
DATE _____
BY _____
(PRINT NAME)

PROPOSED			REVISIONS	D	C	COMPLETED			C
D	M	Y				D	M	Y	

REGION SOUTHERN
SEYMOUR SPUR
SUB. CHAMPAIGN 341

SIGNALS AND COMMUNICATIONS HOMEWOOD
25 FEBRUARY 2016
DES. NAD
CH. MRB

GCP 4000
PROGRAM INFORMATION
CHAMPAIGN, IL
PROSPECT AVE

CHA-001.10-03

DOT#291 044B

SIEMENS INDUSTRY INC

DES.: KLT	DATE: 02/14/14	JOB NO.: PIC410764	
CKD.: BJW	ISSUE DATE: N/A	EST. NO.: #QXP08062	
DRN.: KLT	PLAN NO.: N/A	SHEET 3 OF 17	
P. TIME: 09:55	P. DATE: 10-JUN-2016	CAD ID.: CHA-001.10-03	

SIEMENS INDUSTRY INC
LOUISVILLE DIVISION, LOUISVILLE, KY

cha-001.10-03.dgn
10-JUN-2016

REVISIONS				
NO.	DATE	BY	DESCRIPTION	APP. BY
1				
2				
3				
4				
5				

TO CONFIGURE SEARII & SEARIII PRESS SITE SETUP KEY. USE ARROW KEYS TO MAKE SELECTION, PRESS ENTER AFTER SELECTION HAS BEEN MADE.

STAGE 1

PROGRAM MENU QUESTIONS	PROGRAM	OPTIONS/RANGE
DATE/TIME?	CURRENT DATE/TIME	CURRENT DATE/TIME
AUTOMATIC DST ADJUSTMENT?	YES	YES, NO
TIME ZONE?	CENTRAL	EASTERN, CENTRAL, MOUNTAIN, PACIFIC, ALASKA, HAWAII, ATLANTIC, SASKATCHEWAN, NEW FOUNLAND
SITE NAME?	PROSPECT AVE	STREET NAME
MILE POST?	001.10	MILEAGE
DOT/CROSSING IS #?	291044B	123456A
TESTER TYPE?	CROSSING	CROSSING, WAYSIDE
DATE FORMAT?	dd-mm-yyyy	mm-dd-yyyy, dd-mm-yyyy
TEMPERATURE FORMAT?	FAHRENHEIT	FAHRENHEIT, CELSIUS
INDICATE HOLD?	0	SECONDS
SITE TYPE?	COLLECTOR	NO COM, BULLHORN, DIALUP, NODE, COLLECTOR
SITE ATCS ADDRESS?	7.103.341.001.99.01	7.RRR.LLL.GGG.99.01
OFFICE ATCS ADDRESS?	2.103.00.0000	2.RRR.NN.DDDD
(FOR NODE USE) PRIMARY HOP ADDR?		7.RRR.LLL.GGG.00.01
(FOR NODE USE) BACKUP HOP ADDR1?		7.RRR.LLL.GGG.00.01
(FOR NODE USE) BACKUP HOP ADDR2?		7.RRR.LLL.GGG.00.01
(FOR COLLECTOR USE) POLL ID?	1	1-99
(FOR COLLECTOR USE) MODE?	GEN/ATCS	GEN/ATCS, GENISYS
(FOR COLLECTOR USE) WAMS/XID?	ENABLED	ENABLED, DISABLE
(FOR COLLECTOR USE) OFFICE COMM. DEVICE?	WAG (ECHELON)	DIRECT (RS232) MCM (RS232) MCM (ECHELON) SREAD SPEC (ECHELON) DIAL MODEM (RS232) S200 RADIO (RS422)
(FOR COLLECTOR USE) OFFICE PHONE NUMBER?		PHONE NUMBER OF WAMS
(FOR COLLECTOR USE) INIT STRING?		OPTIONAL HAYES MODEM INITIALIZATION STRING
(FOR COLLECTOR USE) FIELD COMM. DEVICE?		VHF COMM. (ECHELON) VHF COMM. (RS232) SPREAD SPEC (ECHELON) SPREAD SPEC (RS232)
USER PORT?	57600, 8, N, 1, N	BAUD, DATA BITS, PARITY, STOP BITS, FLOW CONTROL
AUX PORT?	9600, 8, N, 1, N	BAUD, DATA BITS, PARITY, STOP BITS, FLOW CONTROL

YOU WILL NOW SEE A MESSAGE "PLEASE WAIT COMPILING STAGE 1" CONTINUE TO NEXT PROGRAM MENU QUESTIONS.

NOTE

1) ADDITIONAL OPTIONS: DUAL CROSSING, EXTERNAL ENTRANCE GATE CONTROLLERS.

STAGE 2

QUESTION	PROGRAM	SELECTION 1 (MINIMUM)	SELECTION 2 (MAXIMUM)	CONDITION FOR MENU DISPLAY
RESET NAMES / MODULES ?	NO	YES	NO	ALWAYS
CROSSING CONFIGURATION ?	NORMAL	NORMAL	SPLIT GATE NOTE 1	ALWAYS
AND1 USED AS XR?	YES	NO	YES	ALWAYS
AND2 USED AS XR?	NO	NO	YES	ALWAYS
AND3 USED AS XR?	NO	NO	YES	ALWAYS
AND4 USED AS XR?	NO	NO	YES	ALWAYS
AND5 USED AS XR?	NO	NO	YES	ALWAYS
AND6 USED AS XR?	NO	NO	YES	ALWAYS
AND7 USED AS XR?	NO	NO	YES	ALWAYS
AND8 USED AS XR?	NO	NO	YES	ALWAYS
XR CONTROLLED BY FOREIGN RR?	NO	AND1	AND8	CROSSING CONFIGURATION = SPLIT GATE
ENTRANCE GATES ?	2	0	8	ALWAYS
GATE CONTROLLED BY FOREIGN RR?	NONE	NONE	TSS4	CROSSING CONFIGURATION = SPLIT GATE
GATE DESCENT TIME (SECONDS)	11	7	20	GATES > 0
GATE POSITION FAIL TIME (SECONDS) ?	17	10	60	GATES > 0
BATTERY BANKS ?	2	1	3	ALWAYS
BATT MON USED ?	NO	NO	YES	ALWAYS
INTERNAL CROSSING CONTROLLERS ?	2	0	2	ALWAYS
EXTERNAL CROSSING CONTROLLERS ?	0	0	2	CROSSING CONTROLLER = YES
ALLOW DTMF CONTROL ?	NO	NO	YES	ALWAYS
COUNTRY	N/A	CANADA	US	ALLOW DTMF CONTROL = YES
DTMF CONTROL WITH PREMPTION ?	N/A	NO	YES	ALLOW DTMF CONTROL = YES
POK ANNOUNCEMENT TO VHF ?	N/A	NO	YES	ALLOW DTMF CONTROL = YES
VHF VOICE CHANNEL ?	N/A	1	8	ALLOW DTMF CONTROL = YES
VHF DATA CHANNEL ?	N/A	1	8	ALLOW DTMF CONTROL = YES
DIGIT #1 ?	N/A	0	9	ALLOW DTMF CONTROL = YES
DIGIT #2 ?	N/A	0	9	ALLOW DTMF CONTROL = YES
DIGIT #3 ?	N/A	0	9	ALLOW DTMF CONTROL = YES
DIGIT #4 ?	N/A	0	9	ALLOW DTMF CONTROL = YES
DIGIT #5 ?	N/A	0	9	ALLOW DTMF CONTROL = YES
TIME-OUT FOR DTMF REQUEST #1 ?	N/A	0	240	ALLOW DTMF CONTROL = YES
TIME-OUT FOR DTMF REQUEST #2 ?	N/A	0	240	ALLOW DTMF CONTROL = YES
TIME-OUT FOR DTMF REQUEST #3 ?	N/A	0	240	ALLOW DTMF CONTROL = YES
TIME-OUT FOR DTMF REQUEST #4 ?	N/A	0	240	ALLOW DTMF CONTROL = YES

STAGE 2 CONT'D

QUESTION	PROGRAM	SELECTION 1 (MINIMUM)	SELECTION 2 (MAXIMUM)	CONDITION FOR MENU DISPLAY
TIME-OUT FOR DTMF REQUEST #5 ?	N/A	0	240	ALLOW DTMF CONTROL = YES
TIME-OUT FOR DTMF REQUEST #6 ?	N/A	0	240	ALLOW DTMF CONTROL = YES
TIME-OUT FOR DTMF REQUEST #7 ?	N/A	0	240	ALLOW DTMF CONTROL = YES
ISLAND RELEASE DTMF REQUEST #1 ?	N/A	0	6	TIME-OUT FOR DTMF REQUEST #1 > 0
ISLAND RELEASE DTMF REQUEST #2 ?	N/A	0	6	TIME-OUT FOR DTMF REQUEST #2 > 0
ISLAND RELEASE DTMF REQUEST #3 ?	N/A	0	6	TIME-OUT FOR DTMF REQUEST #3 > 0
ISLAND RELEASE DTMF REQUEST #4 ?	N/A	0	6	TIME-OUT FOR DTMF REQUEST #4 > 0
ISLAND RELEASE DTMF REQUEST #5 ?	N/A	0	6	TIME-OUT FOR DTMF REQUEST #5 > 0
ISLAND RELEASE DTMF REQUEST #6 ?	N/A	0	6	TIME-OUT FOR DTMF REQUEST #6 > 0
ISLAND RELEASE DTMF REQUEST #7 ?	N/A	0	6	TIME-OUT FOR DTMF REQUEST #7 > 0
ILOD MODULES ?	2	0	4	ALWAYS
ANY LED BULBS USED ?	YES	NO	YES	ILOD MODULES > 0
AUTO INSPECTION ?	NO	YES	NO	ALWAYS
BELL SENSORS ?	1	0	8	ALWAYS
BELL SENSORS TSS1 ?	YES	NO	YES	BELL SENSORS > 0
BELL SENSORS TSS2 ?	NO	NO	YES	BELL SENSORS > 0
BELL SENSORS TSS3 ?	NO	NO	YES	BELL SENSORS > 0
BELL SENSORS TSS4 ?	NO	NO	YES	BELL SENSORS > 0
BELL SENSORS TSS5 ?	NO	NO	YES	BELL SENSORS > 0
BELL SENSORS TSS6 ?	NO	NO	YES	BELL SENSORS > 0
BELL SENSORS TSS7 ?	NO	NO	YES	BELL SENSORS > 0
BELL SENSORS TSS8 ?	NO	NO	YES	BELL SENSORS > 0
BELL ON ?	GATES LOWERING	GATES LOWERING		BELL SENSORS > 0
		GATES MOVING		
		ALWAYS		
BATTERY PERCENT FOR ALARM ?	85	0	100	ALWAYS
GFT'S ?	YES	YES	NO	ALWAYS
BATTERIES ON GFT1 ?	2	1	2	GFT'S = YES
GATE UP SOURCE ?	GP	TSS	GP	GATE > 0
GATE DOWN SOURCE ?	GD	TIP , TSS	GD	GATES > 0
USE CELL MODEM NON-CRITICAL FEATURE ?	NO	NO	YES	ALWAYS
FULL APPROACH MOVE ALARMS ?	ACTIVATE	ACTIVATE		ALWAYS
		DO NOT ACTIVATE		

YOU WILL NOW SEE A MESSAGE "PLEASE WAIT COMPILING STAGE 2" CONTINUE TO NEXT PROGRAM MENU QUESTIONS.

STAGE 3

PROGRAM MENU QUESTIONS	
EDIT DIGITAL INPUTS	NO
EDIT BATTERIES	NO
EDIT RELAYS	NO
EDIT TEST LEDS	NO
EDIT ILOD SENSORS	NO
EDIT VHF SETTINGS	NO
GCP4K ATCS SUBNODE?	16

SAVE CONFIGURATION

cha-001.10-04.dgn
10-JUN-2016

SIEMENS INDUSTRY INC

DES. : KLT	DATE: 02/14/14	JOB NO.: PICA10764	
CKD. : BJW	ISSUE DATE: N/A	EST. NO.: GDXP08062	
DRN. : KLT	PLAN NO.: N/A	SHEET 4 OF 17	
P TIME: 09:55	P DATE: 10-JUN-2016	CAD ID.: CHA-001.10-04	

SII 25 FEB 2016

PROPOSED
DESIGN NO. 14-0049
RED-IN YELLOW-OUT

AS INSTALLED
DATE _____
BY _____
(PRINT NAME)

SEARII EXECUTIVE 9V725 REV. A01U, SEARII APPLICATION 9VC45 REV. A01A

PROPOSED D	PROPOSED M	PROPOSED Y	REVISIONS	D	C	COMPLETED D	COMPLETED M	COMPLETED Y	C

REGION SOUTHERN
SEYMOUR SPUR
SUB. CHAMPAIGN 341

SIGNALS AND COMMUNICATIONS HOMEWOOD
25 FEBRUARY 2016
DES. NAD
CH. MRB

GCP 4000/SEAR III
SETUP & PROGRAM
CHAMPAIGN, IL
PROSPECT AVE

CHA-001.10-04

DOT#291 044B

SIEMENS INDUSTRY INC
LOUISVILLE DIVISION, LOUISVILLE, KY

GCP 4000
CALIBRATION HISTORY

INITIAL SET UP BY: _____ DATE: _____

		APPROACH DISTANCE CALIBRATION										LINEARIZATION CALIBRATION	
		EZ/EX VALUES (TRACK UNOCCUPIED)				HARD WIRE SHUNT AT TERMINATION SHUNT				COMPUTED APPROACH DISTANCE		LINEARIZATION STEP VALUE	
		EZ		EX		EZ		EX					
		NRML	STBY	NRML	STBY	NRML	STBY	NRML	STBY	NRML	STBY	NRML	STBY
WEST	TRACK 1												
EAST	TRACK 1												

GCP 4000
CALIBRATION HISTORY

INITIAL SET UP BY: _____ DATE: _____

		APPROACH DISTANCE CALIBRATION										LINEARIZATION CALIBRATION	
		EZ/EX VALUES (TRACK UNOCCUPIED)				HARD WIRE SHUNT AT TERMINATION SHUNT				COMPUTED APPROACH DISTANCE		LINEARIZATION STEP VALUE	
		EZ		EX		EZ		EX					
		NRML	STBY	NRML	STBY	NRML	STBY	NRML	STBY	NRML	STBY	NRML	STBY
WEST	TRACK 1												
EAST	TRACK 1												

GCP 4000
CALIBRATION HISTORY

INITIAL SET UP BY: _____ DATE: _____

		APPROACH DISTANCE CALIBRATION										LINEARIZATION CALIBRATION	
		EZ/EX VALUES (TRACK UNOCCUPIED)				HARD WIRE SHUNT AT TERMINATION SHUNT				COMPUTED APPROACH DISTANCE		LINEARIZATION STEP VALUE	
		EZ		EX		EZ		EX					
		NRML	STBY	NRML	STBY	NRML	STBY	NRML	STBY	NRML	STBY	NRML	STBY
WEST	TRACK 1												
EAST	TRACK 1												

REVISIONS

NO.	DATE	BY	DESCRIPTION	APP. BY
1				
2				
3				
4				
5				

SIEMENS INDUSTRY INC

DES.: KLT	DATE: 02/14/14	JOB NO.: PICA10764	
CKD.: BJW	ISSUE DATE: N/A	EST. NO.: QDXP08062	
DRN.: KLT	PLAN NO.: N/A	SHEET 5 OF 17	
P TIME: 09:55	P DATE: 10-JUN-2016	CAD ID.: CHA-001.10-05	

SIII 25 FEB 2016

PROPOSED
DESIGN NO. 14-0049
RED-IN YELLOW-OUT

AS INSTALLED
DATE _____
BY _____
(PRINT NAME)

PROPOSED D	M	Y	REVISIONS	D	C	COMPLETED D	M	Y	C

REGION SOUTHERN
SEYMOUR SPUR
SUB. CHAMPAIGN 341

SIGNALS AND COMMUNICATIONS HOMEWOOD
25 FEBRUARY 2016
DES. NAD
CH. MRB

GCP 4000
CALIBRATION HISTORY
CHAMPAIGN, IL
PROSPECT AVE

CHA-001.10-05

DOT#291 044B

SIEMENS INDUSTRY INC
LOUISVILLE DIVISION, LOUISVILLE, KY

cha-001.10-05.dgn
10-JUN-2016

REVISIONS				
NO.	DATE	BY	DESCRIPTION	APP. BY
1				
2				
3				
4				
5				

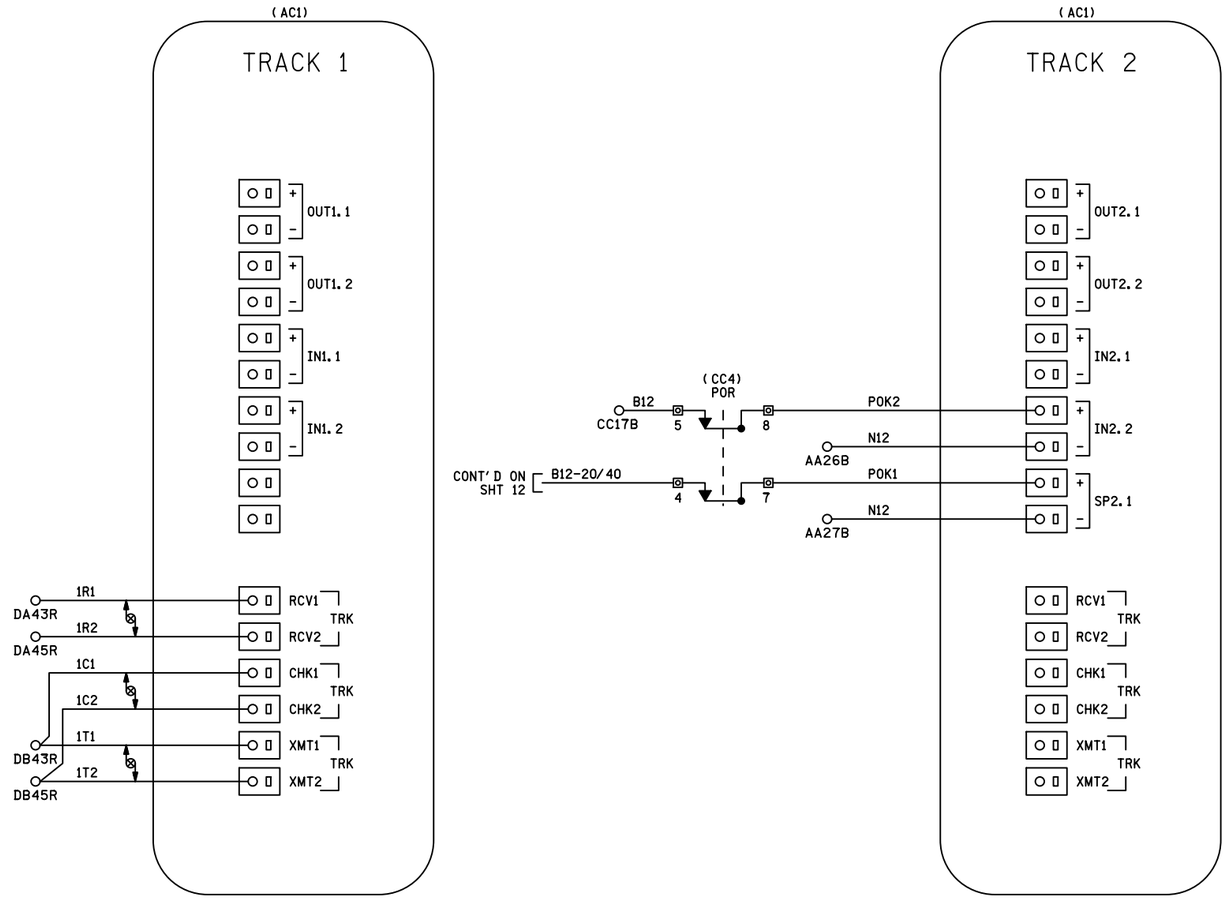

NOTES

1) ALL WIRING #16 AWG UNLESS OTHERWISE NOTED

DENOTES TWISTED PAIR

SIEMENS INDUSTRY INC			
DES.: KLT	DATE: 02/14/14	JOB NO.: PICA10764	
CKD.: BJW	ISSUE DATE: N/A	EST. NO.: GDXP08062	
DRN.: KLT	PLAN NO.: N/A	SHEET 6 OF 17	
P TIME: 09:55	P DATE: 10-JUN-2016	CAD ID.: CHA-001.10-06	

SIII 25 FEB 2016

PROPOSED
DESIGN NO. 14-0049
RED-IN YELLOW-OUT

AS INSTALLED
DATE _____
BY _____
(PRINT NAME)

PROPOSED			REVISIONS	D	C	COMPLETED			C
D	M	Y				D	M	Y	

REGION SOUTHERN
SEYMOUR SPUR
SUB. CHAMPAIGN 341

SIGNALS AND COMMUNICATIONS HOMEWOOD
25 FEBRUARY 2016
DES. NAD
CH. MRB

GCP 4000
TRACK 1 & 2 MODULE CONNECTIONS
CHAMPAIGN, IL
PROSPECT AVE

CHA-001.10-06

DOT#291 044B

SIEMENS INDUSTRY INC
LOUISVILLE DIVISION, LOUISVILLE, KY

cha-001.10-06.dgn
10-JUN-2016

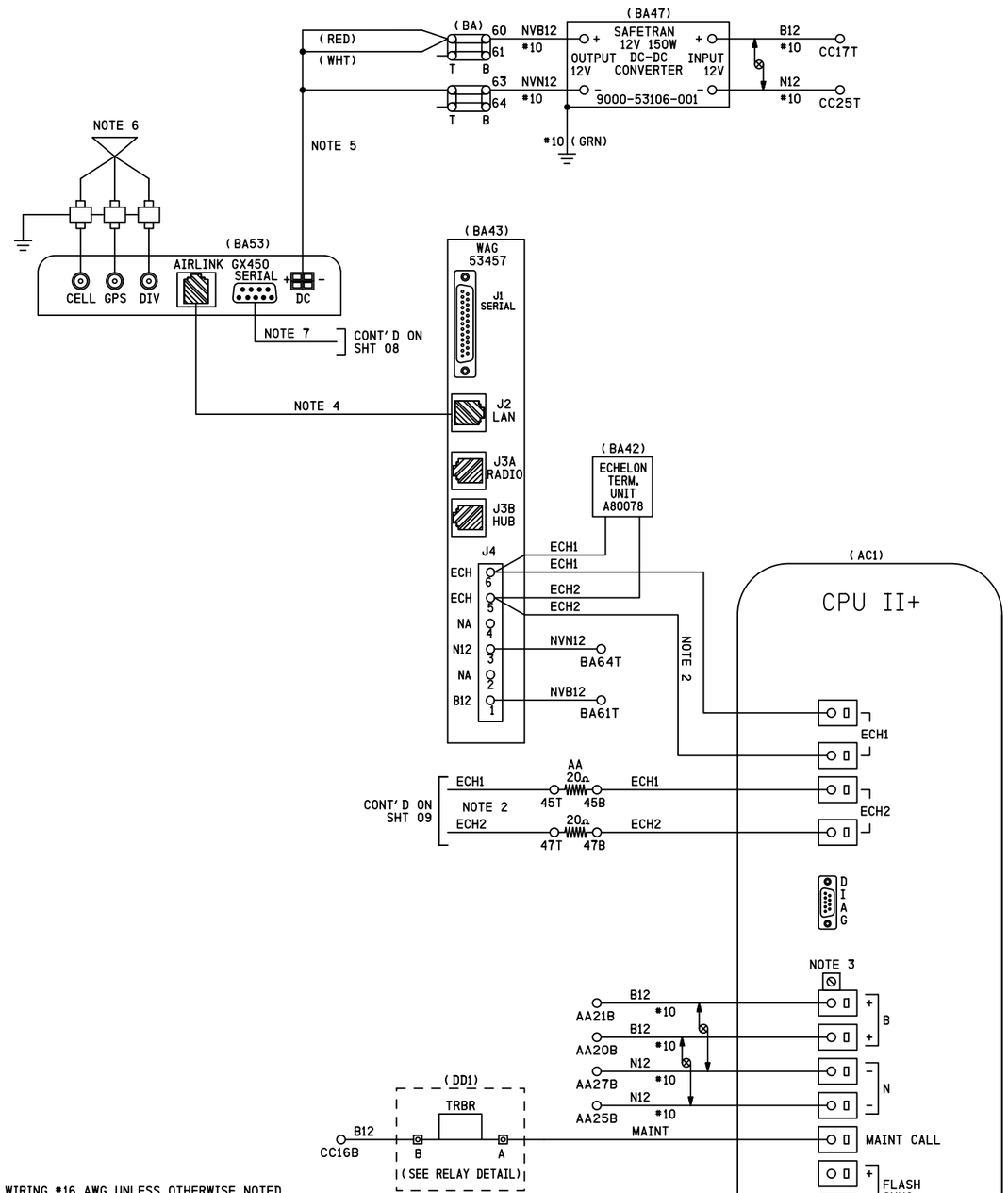

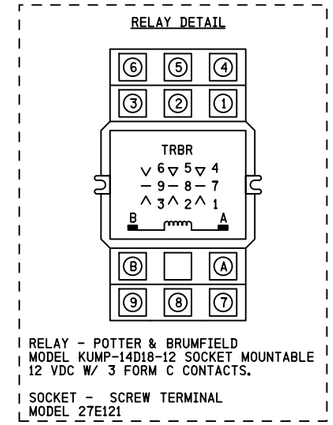

WAG SETUP INFORMATION	
FUNCTION	VALUE
WAG TYPE 7 ATCS ADDRESS	7.103.341.001.01.01
WAG CIRCUIT ID	341.1.04

NOTES

1) ALL WIRING #16 AWG UNLESS OTHERWISE NOTED
2) USE BELDEN CABLE, PART # 8461-u500-60 FOR ALL ECHELON AND LAN WIRING
3) ENSURE CONNECTIONS ARE SECURED IN PLACE BY SCREW LOCKING MECHANISM
4) STRAIGHT THROUGH CAT 5/5E UTP CABLE
5) MODEM POWER CABLE WITH A 4 PIN CONNECTOR GREEN WIRE NOT USED AND NOT TERMINATED
6) ANTENNA, CABLE AND POLYPHASER INSTALLED PER RFAIG
7) RS-232 SERIAL STRAIGHT THROUGH MODEM CABLE

DENOTES TWISTED PAIR

REVISIONS

NO.	DATE	BY	DESCRIPTION	APP. BY
1				
2				
3				
4				
5				

SIEMENS INDUSTRY INC

DES.: KLT	DATE: 02/14/14	JOB NO.: PICA10764	
CKD.: BJW	ISSUE DATE: N/A	EST. NO.: #GDXP08062	
DRN.: KLT	PLAN NO.: N/A	SHEET 7 OF 17	
P. TIME: 09:55	P. DATE: 10-JUN-2016	CAD ID.: CHA-001.10-07	

SIII 25 FEB 2016

PROPOSED
DESIGN NO. 14-0049
RED-IN YELLOW-OUT

AS INSTALLED
DATE
BY
(PRINT NAME)

PROPOSED D	M	Y	REVISIONS	D	C	COMPLETED D	M	Y	C

REGION SOUTHERN
SEYMOUR SPUR
SUB. CHAMPAIGN 341

SIGNALS AND COMMUNICATIONS HOMEWOOD
DES. NAD
25 FEBRUARY 2016
CH. MRB

GCP 4000
CPUII+ & RAILFUSION
CHAMPAIGN, IL

PROSPECT AVE

CHA-001.10-07

DOT#291 044B

SIEMENS INDUSTRY INC
LOUISVILLE DIVISION, LOUISVILLE, KY

cha-001.10-07.dgn
10-JUN-2016

REVISIONS				
NO.	DATE	BY	DESCRIPTION	APP. BY
1				
2				
3				
4				
5				

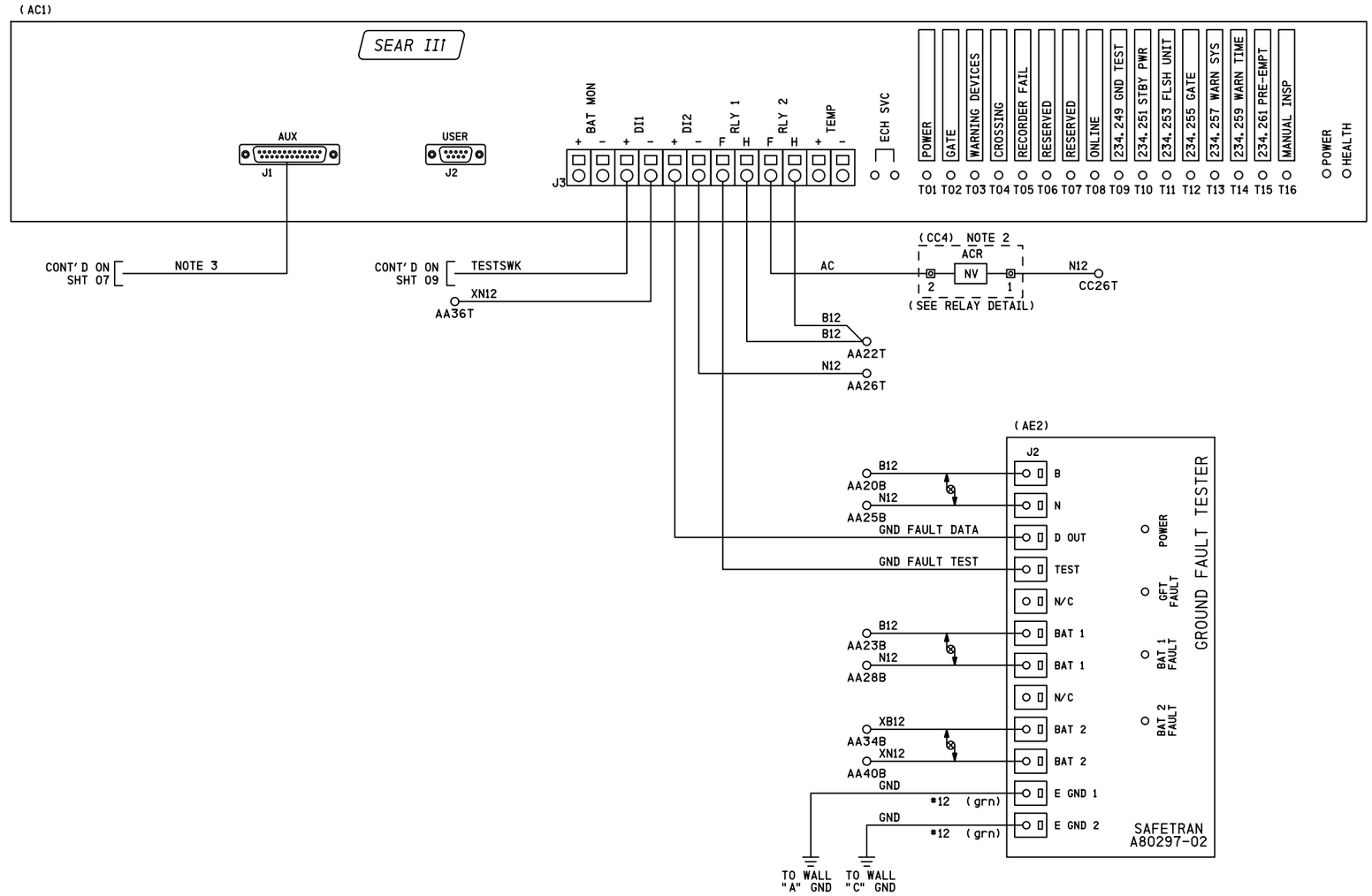

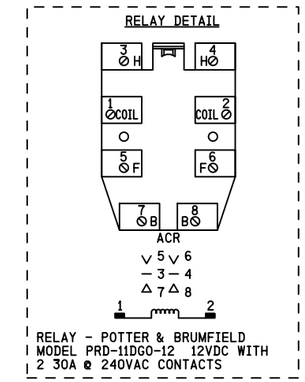

NOTES

1) ALL WIRING #16 AWG UNLESS OTHERWISE NOTED
2) PART OF SEARIII POWER CONTROL AND INDICATION RELAY JUNCTION BOX
3) RS-232 SERIAL STRAIGHT THROUGH MODEM CABLE

⊗ DENOTES TWISTED PAIR

SII 25 FEB 2016

PROPOSED
DESIGN NO. 14-0049
RED-IN YELLOW-OUT

AS INSTALLED
DATE _____
BY _____
(PRINT NAME)

PROPOSED			REVISIONS	D	C	COMPLETED			C
D	M	Y				D	M	Y	

REGION SOUTHERN
SEYMOUR SPUR
SUB. CHAMPAIGN 341

SIGNALS AND COMMUNICATIONS HOMEWOOD
25 FEBRUARY 2016
DES. NAD
CH. MRB

GCP 4000
SEAR III WITH GFT
CHAMPAIGN, IL
PROSPECT AVE

CHA-001.10-08

DOT#291 044B

cha-001.10-08.dgn
10-JUN-2016

SIEMENS INDUSTRY INC

DES.: KLT	DATE: 02/14/14	JOB NO.: PICA10764	
CKD.: BJW	ISSUE DATE: N/A	EST. NO.: QDXP08062	
DRN.: KLT	PLAN NO.: N/A	SHEET 8 OF 17	
P TIME: 09:56	P DATE: 10-JUN-2016	CAD ID.: CHA-001.10-08	

SIEMENS INDUSTRY INC
LOUISVILLE DIVISION, LOUISVILLE, KY