REVISIONS				
NO.	DATE	BY	DESCRIPTION	APP. BY
1				
2				
3				
4				
5				

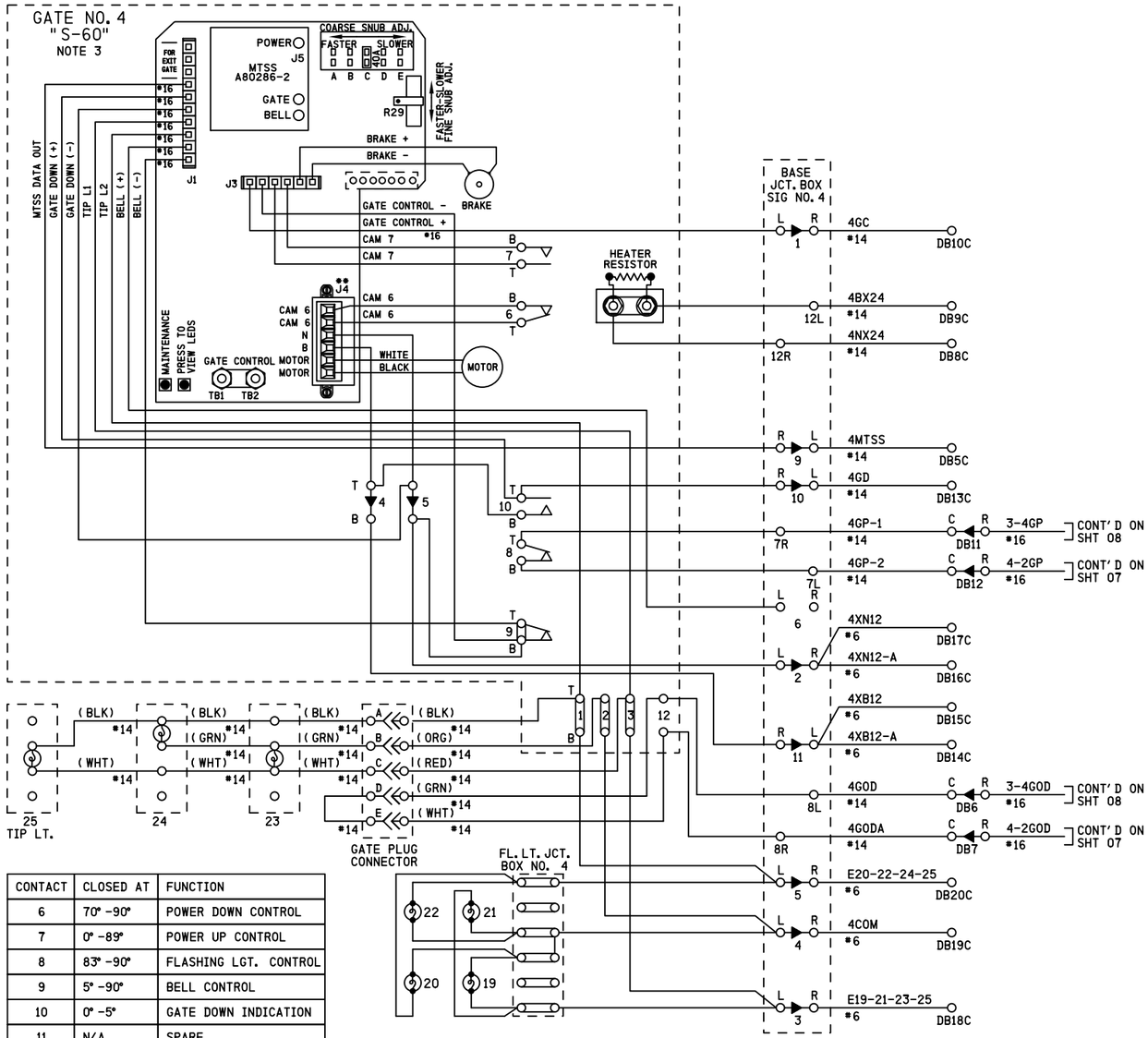

CONTACT	CLOSED AT	FUNCTION
6	70° -90°	POWER DOWN CONTROL
7	0° -89°	POWER UP CONTROL
8	83° -90°	FLASHING LGT. CONTROL
9	5° -90°	BELL CONTROL
10	0° -5°	GATE DOWN INDICATION
11	N/A	SPARE
12	N/A	SPARE

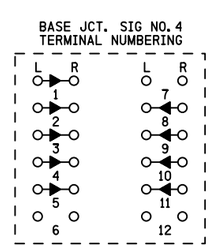

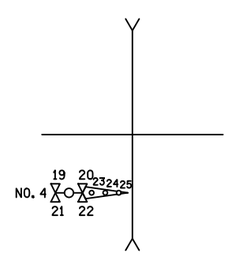

NOTES

1) ON GATE NO. 1:
   ADD JUMPER BETWEEN TERMINAL 4T & 10B,
   ADD JUMPER BETWEEN TERMINAL 5B & 9B
2) ALL WIRING #10 AWG UNLESS OTHERWISE NOTED
3) GATE DESCENT TIME (RELEASE FROM VERTICAL TO FULLY HORIZONTAL) TO BE WITHIN 11 SECONDS
4) ENSURE ALL TERMINALS HAVE TWO SHOULDER NUTS

SIEMENS INDUSTRY INC

DES.: BEH	DATE: 04/05/16	JOB NO.: PICA10767	
CKD.: BJW	ISSUE DATE: N/A	EST. NO.: XP-8133	
DRN.: BEH	PLAN NO.: N/A	SHEET 8 OF 19	
P TIME: 16:59	P DATE: 13-MAY-2016	CAD ID.: CTN-720.60-01	

SIEMENS INDUSTRY INC
LOUISVILLE DIVISION, LOUISVILLE, KY

SII 04 MAY 2016

PROPOSED
DESIGN NO. 14-0053
RED-IN YELLOW-OUT

AS INSTALLED
DATE _____
BY _____
(PRINT NAME)

PROPOSED			REVISIONS	D	C	COMPLETED			C
D	M	Y				D	M	Y	

REGION SOUTHERN
SUB. PEORIA 362

SIGNALS AND COMMUNICATIONS HOMEWOOD
04 MAY 2016
DES. BEH
CH. BJW

GATE 4 MECH. CONTROL CIRCUITS
SAFETRAN S-60
SOUTH PEKIN, IL
VFW RD

PEO-011.80-09

DOT#292 680C

peo-011.80-09.dgn
13-MAY-2016

REVISIONS				
NO.	DATE	BY	DESCRIPTION	APP. BY
1				
2				
3				
4				
5				

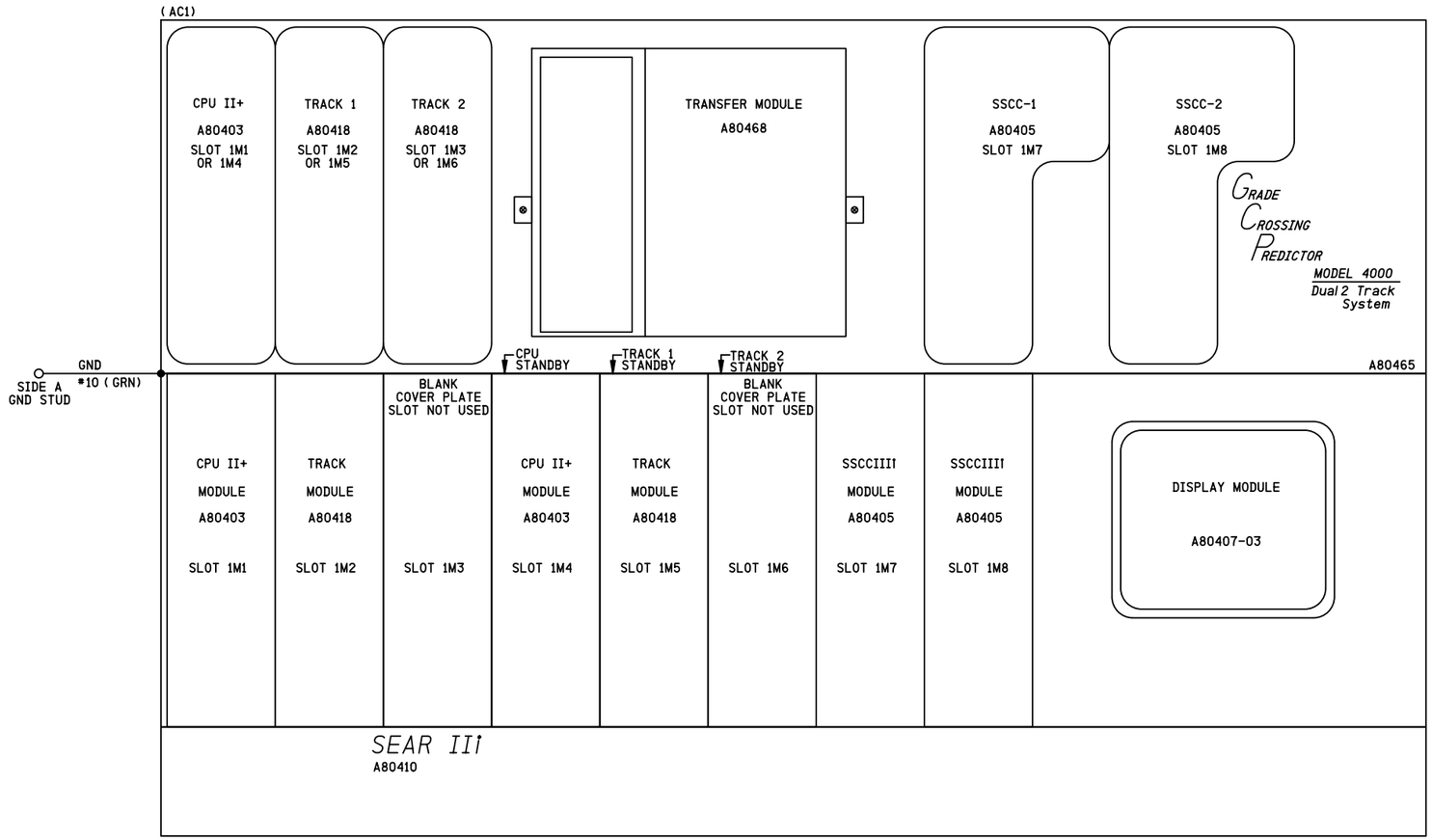

NOTES

1) DISABLE THE DISPLAY HEATER BY REMOVING JUMPER J-22 (LOCATED AT THE EDGE OF THE DISPLAY MODULE CARD THAT PLUGS INTO THE CHASSIS)

2) SET THE TRANSFER INTERVAL TIME TO 3 MINUTES BY SETTING DIPSWITCH S3 (LOCATED IN THE UPPER LEFT CORNER OF THE TRANSFER MODULE CARD) TO:

S3-0	S3-1	S3-2	S3-3	S3-4
1	1	0	0	0

0 = UP/OPEN
1 = DOWN/CLOSED

ATTENTION!

ENSURE THE DISPLAY MODULE HEATER IS DISABLED
LEAVING THE DISPLAY HEATER ENABLED WILL REDUCE THE AMOUNT OF BATTERY STANDBY TIME IN THE EVENT OF AN AC POWER FAILURE

HEATER FUNCTION IS JUMPER SELECTABLE ON THE DISPLAY MODULE BOARD
THREE OPTIONS ARE AVAILABLE
NORMAL LCD HTR (DEFAULT)
HI CURRENT
NO JUMPER (HEATER DISABLED)

SII 04 MAY 2016

PROPOSED
DESIGN NO. 14-0053
RED-IN YELLOW-OUT

AS INSTALLED
DATE _____
BY _____
(PRINT NAME)

PROPOSED D	PROPOSED M	PROPOSED Y	REVISIONS	D	C	COMPLETED D	COMPLETED M	COMPLETED Y	C

REGION SOUTHERN
SUB. PEORIA 362

SIGNALS AND COMMUNICATIONS HOMEWOOD
04 MAY 2016
DES. BEH
CH. BJW

GCP 4000 CHASSIS & MODULE LAYOUT

SOUTH PEKIN, IL
VFW RD

PEO-011.80-10

DOT#292 680C

SIEMENS INDUSTRY INC

DES.: BEH	DATE: 04/05/16	JOB NO.: PICA10767	
CKD.: BJW	ISSUE DATE: N/A	EST. NO.: XP-8133	
DRN.: BEH	PLAN NO.: N/A	SHEET 10 OF 19	
P TIME: 16:59	P DATE: 13-MAY-2016	CAD ID.: CTN-720.60-01	

SIEMENS INDUSTRY INC
LOUISVILLE DIVISION, LOUISVILLE, KY

peo-011.80-10.dgn
13-MAY-2016

REVISIONS				
NO.	DATE	BY	DESCRIPTION	APP. BY
1				
2				
3				
4				
5				

Program Report

Location and SIN

DOT Number: 292680C
Milepost Number: 011.80
Site Name: VFW RD

SIN: 710336201116

MCF and Template Selection

MCF Name: GCP-T6X-02-2.mcf
MCF Revision: 022
MCFCRC: 79225F13

Template = 1A:6 Trk BI (OCCN)

Check Numbers

Office Check Number: 7FB4938C
Config. Check Number: 108A02E5
(Based on MCF Revision 022)

Program

BASIC: module configuration
Track 1/PSO 1 Slot = Track (OCCN)
Track 2/RIO 1 Slot = Not Used (OCCN)
Track 3/PSO 2 Slot = Not Used (OCCN)
Track 4/PSO 3 Slot = Not Used (OCCN)
Track 5/RIO 2 Slot = Not Used (OCCN)
Track 6/RIO 3 Slot = Not Used (OCCN)
SSCC-1 Slot = SSCC31 (OCCN)
SSCC-2 Slot = SSCC31 (OCCN)
SEAR Used = Yes (OCCN)

BASIC: MS/GCP operation
Track 1 : MS/GCP Operation = Yes (OCCN)

BASIC: Island operation
Track 1 : Island Used = Internal (OCCN)

BASIC: preemption
Preempt Logic = No (OCCN)

BASIC: radio Dax links
Radio DAX link A Used = No (OCCN)
Radio DAX link B Used = No (OCCN)

BASIC: Vital Comms links
Vital Comms link 1 Used = No (OCCN)
Vital Comms link 2 Used = No (OCCN)

PREDICTORS: track 1
Track 1 : Prime Used = Yes (OCCN)
Track 1 : Dax A Used = No (OCCN)
Track 1 : Dax B Used = No (OCCN)
Track 1 : Dax C Used = No (OCCN)
Track 1 : Dax D Used = No (OCCN)
Track 1 : Dax E Used = No (OCCN)
Track 1 : Dax F Used = No (OCCN)
Track 1 : Dax G Used = No (OCCN)

GCP: track 1
Track 1 : GCP Freq Category = Standard (Field)
Track 1 : GCP Frequency = 285 Hz (Field, TCN)
Track 1 : Approach Distance = 2070 ft (Field, TCN)
Track 1 : Uni/Bi/Sim-Bidirni = Bidirni (OCCN, TCN)
Track 1 : GCP Transmit Level = High (Field, TCN)
Track 1 : Island Connection = Isl1 (OCCN)
Track 1 : Directionally Wired = No (OCCN)
Track 1 : Island Distance = 162 ft (Field, TCN)
Track 1 : Computed Distance = 9999 ft (Field, TCN)
Track 1 : Linearization Steps = 100 (Field, TCN)

GCP: track 1 enhanced det
Track 1 : Inbound PS Sensitivity = High (Field)
Track 1 : Speed Limiting Used = Yes (Field)
Track 1 : Outbound False Act Lvl = Normal (Field)
Track 1 : Outbound PS Timer = 20 sec (Field)
Track 1 : Trailing Switch Logic = On (Field)
Track 1 : Post Joint Detn Time = 15 sec (OCCN)
Track 1 : Adv Appr Predn = No (OCCN)
Track 1 : Cancel Pickup Delay = This Isl (OCCN)

GCP: track 1 BIDAX RX
Track 1 : BIDAX To RX Appr = Not Used (OCCN)

GCP: track 1 BIDAX TX
Track 1 : BIDAX To TX Appr = Not Used (OCCN)

GCP: track 1 prime
Track 1 : Prime Warning Time = 30 sec (OCCN)
Track 1 : Prime Offset Distance = 0 ft (Field)
Track 1 : Switch MS EZ Level = 14 (OCCN)
Track 1 : Prime MS/GCP Mode = Pred (OCCN)
Track 1 : Prime Pickup Delay = 30 sec (OCCN)
Track 1 : Prime UAX = Not Used (OCCN)

GCP: track 1 pos start
Track 1 : Positive Start = Off (OCCN)
Track 1 : Sudden Shnt Det Used = No (OCCN)
Track 1 : Low EZ Detection Used = Yes (OCCN)
Track 1 : Low EZ Detection Level = 70 (Field)
Track 1 : Low EZ Detection Time = 15 min (OCCN) (NOTE 5)
Track 1 : Low EZ Det Effect = Actvate (OCCN)
Track 1 : Low EZ Det Override IP = No (OCCN)

GCP: track 1 MS Control
Track 1 : MS/GCP Ctrl IP Used = No (OCCN)
Track 1 : MS Sensitivity Level = 0 (Field)
Track 1 : Compensation Level = 1300 (Field, TCN)
Track 1 : Warn Time-Ballast Comp = High (Field, TCN)
Track 1 : Low EX Adjustment = 39 (Field)
Track 1 : Bidirn Dax Passthru = No (OCCN)
Track 1 : False Act on Train Stop = No (Field)
Track 1 : EX Limiting Used = Yes (Field)
Track 1 : EZ Correction Used = Yes (Field)

ISLAND: track 1
Track 1 : Isl Frequency = 10.0 kHz (Field)
Track 1 : Pickup Delay (2s +) = 0 sec (OCCN)
Track 1 : Isl Enable IP Used = No (OCCN)

AND: track Anding
AND 1 XR Used = Yes (OCCN)
AND 2 Used = No (OCCN)
AND 3 Used = No (OCCN)
AND 4 Used = No (OCCN)
AND 5 Used = No (OCCN)
AND 6 Used = No (OCCN)
AND 7 Used = No (OCCN)
AND 8 Used = No (OCCN)

AND: AND 1 XR
AND 1 XR Track 1 = Prime (OCCN)
AND 1 Enable Used = Yes (OCCN)
And 1 Enable Pickup = 0 sec (OCCN)
AND 1 Enable Drop = 0 sec (OCCN)
AND 1 Wrap Used = No (OCCN)

ADVANCED: MS restart
MS/GCP Restart Used = No (OCCN)

ADVANCED: out of service
OOS Control = OOS IPs (OCCN)

ADVANCED: out of service 2
T1 OOS Control = OOS Input 1 (OCCN)
T1 OOS Controls = GCP and Island (OCCN)

ADVANCED: track wrap circuits
Wrap LOS Timer = 5 sec (OCCN)
Track 1 Wrap Used = No (OCCN)

ADVANCED: trk 1 overrides
Track 1 : All Predictors Override Used = No (OCCN)

ADVANCED: OR logic
OR 1 Used = No (OCCN)
OR 2 Used = No (OCCN)
OR 3 Used = No (OCCN)
OR 4 Used = No (OCCN)

ADVANCED: Internal I/O 1
Pass Thrus = No (OCCN)
Int.1 Sets = Not Used (OCCN)
Int.1 Set by = Not Used (OCCN)
Int.2 Sets = Not Used (OCCN)
Int.2 Set by = Not Used (OCCN)
Int.3 Sets = Not Used (OCCN)
Int.3 Set by = Not Used (OCCN)
Int.4 Sets = Not Used (OCCN)
Int.4 Set by = Not Used (OCCN)

ADVANCED: Internal I/O 2
Int.5 Sets = Not Used (OCCN)
Int.5 Set by = Not Used (OCCN)
Int.6 Sets = Not Used (OCCN)
Int.6 Set by = Not Used (OCCN)
Int.7 Sets = Not Used (OCCN)
Int.7 Set by = Not Used (OCCN)
Int.8 Sets = Not Used (OCCN)
Int.8 Set by = Not Used (OCCN)

ADVANCED: Internal I/O 3
Int.9 Sets = Not Used (OCCN)
Int.9 Set by = Not Used (OCCN)
Int.10 Sets = Not Used (OCCN)
Int.10 Set by = Not Used (OCCN)
Int.11 Sets = Not Used (OCCN)
Int.11 Set by = Not Used (OCCN)
Int.12 Sets = Not Used (OCCN)
Int.12 Set by = Not Used (OCCN)

ADVANCED: Internal I/O 4
Int.13 Sets = Not Used (OCCN)
Int.13 Set by = Not Used (OCCN)
Int.14 Sets = Not Used (OCCN)
Int.14 Set by = Not Used (OCCN)
Int.15 Sets = Not Used (OCCN)
Int.15 Set by = Not Used (OCCN)
Int.16 Sets = Not Used (OCCN)
Int.16 Set by = Not Used (OCCN)

ADVANCED: site options
Daylight Savings = On (Field)
Units = Standard (OCCN)
Maint Call Rpt IP Used = No (OCCN)
Emergency Activate IP = No (OCCN)
EZ/EX Logging = Change (Field)
EZ/EX Point Change = 3 (Field)

SSCC
Gates Used = Yes (OCCN)
SSCC1+2 GPs Coupled = Yes (OCCN)
Min Activation = 20 sec (OCCN)
Rmt Activation Cancel = 3 min (OCCN)
Bell On Gate Rising = No (OCCN)
Mute Bell On Gate Down = No (OCCN)
SSCCIV Controller Used = No (OCCN)

SSCC: 1
SSCC-1 Activation = AND 1 XR (OCCN)
SSCC-1 Gate Delay = 4 sec (OCCN)
SSCC-1 Number of GPs = 1 (OCCN)
SSCC-1 Number of GDs = 2 (OCCN)
SSCC 1 : Flash Rate = 55 (OCCN)
SSCC 1 : Low Battery Detection = No (Field)
SSCC 1 : Flash Sync = master (OCCN)
SSCC 1 : Invert Gate Output = No (OCCN)
SSCC 1 : Lamp Neutral Test = Off (Field)
Aux-1 Xng Ctrl Used = No (OCCN)

SSCC: 2
SSCC-2 Activation = AND 1 XR (OCCN)
SSCC-2 Gate Delay = 4 sec (OCCN)
SSCC-2 Number of GPs = 0 (OCCN)
SSCC-2 Number of GDs = 2 (OCCN)
SSCC 2 : Flash Rate = 55 (OCCN)
SSCC 2 : Low Battery Detection = No (Field)
SSCC 2 : Flash Sync = slave (OCCN)
SSCC 2 : Invert Gate Output = No (OCCN)
SSCC 2 : Lamp Neutral Test = Off (Field)
Aux-2 Xng Ctrl Used = No (OCCN)

OUTPUT: assignment page 1
OUT 1.1 = Not Used (OCCN)
OUT 1.2 = Not Used (OCCN)

INPUT: assignment page 1
IN 1.1 = Not Used (OCCN)
IN 1.2 = Not Used (OCCN)

IO: assignment SSCC
OUT GC 1 = Gate Output 1 (OCCN)
OUT GC 2 = Gate Output 2 (OCCN)
IN 7.1 = AND 1 XR Enable (OCCN)
IN 7.2 = GD 1.2 (OCCN)
IN 7.3 = Not Used (OCCN)
IN 7.4 = GD 1.1 (OCCN)
IN 7.5 = GP 1.1 (OCCN)
IN 8.1 = Out Of Service IP 1 (OCCN)
IN 8.2 = GD 2.2 (OCCN)
IN 8.3 = Not Used (OCCN)
IN 8.4 = GD 2.1 (OCCN)
IN 8.5 = Not Used (OCCN)

SEAR
SEAR Subnode = 99 (OCCN)
DI 1 = General1 (OCCN)
DI 2 = Gnd Flt Tester 1 (OCCN)
Rly 1 = Ground Fault Test (OCCN)
Rly 2 = AC Control (OCCN)

SEAR: Inputs
SP 2.1 = POK 1 (OCCN)
SP 3.1 = Not Used (OCCN)
SP 4.1 = Not Used (OCCN)
SP 5.1 = Not Used (OCCN)
SP 6.1 = Not Used (OCCN)

SEAR: slot 1-4 Inputs
IN 1.1 = Not Used (OCCN)
IN 1.2 = Not Used (OCCN)
IN 2.1 = Not Used (OCCN)
IN 2.2 = POK 2 (OCCN)
IN 3.1 = Not Used (OCCN)
IN 3.2 = Not Used (OCCN)
IN 4.1 = Not Used (OCCN)
IN 4.2 = Not Used (OCCN)

SEAR: Inputs slot 5
IN 5.1 = Not Used (OCCN)
IN 5.2 = Not Used (OCCN)

SEAR: Inputs slot 6
IN 6.1 = Not Used (OCCN)
IN 6.2 = Not Used (OCCN)

SEAR: slot 7-8 Inputs
IN 7.3 = TSS 1 (OCCN)
IN 8.3 = TSS 2 (OCCN)
IN 8.5 = General2 (OCCN)

SITE: programming
Radio Subnode = 1 (Field)
Field Password = Off (OCCN)
Low Battery Enabled = Off (Field)

Configuration Package File

Filename: peo-011.80.pac

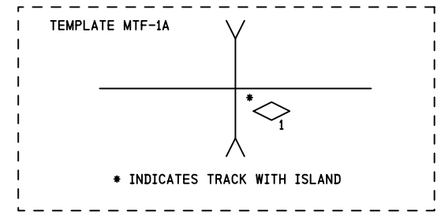

NOTES
1) DISTANCE(S) TO BE VERIFIED AT INSTALLATION
INDICATE SELECTED PROGRAMMED VALUE IF DIFFERENT THAN SHOWN
REFER TO 4000 GCP INSTRUCTION/INSTALLATION MANUAL
FOR PROGRAMMING PARAMETERS
2) PROGRAM TEXT HIGHLIGHTED IN RED INDICATES 4000 PROGRAM
MODIFICATIONS TO DEFAULT PROGRAM VALUES
3) EACH CONSTANT WARNING DEVICE SYSTEM TO BE PROGRAMMED TO
CONVERT TO A MOTION SENSOR 300 FEET FROM EDGE OF ROAD
TRAVELLED WAY
SHUNT TRACK 300 FEET FROM EDGE OF ROAD TRAVELLED WAY
AND NOTE "EZ" VALUE
PROGRAM EACH SYSTEM WITH THE INDICATED "EZ" VALUE +2
4) VERIFY SET TIMER VALUE TO MATCH ACTUAL TRAIN MOVEMENT
WITHIN THE CROSSING APPROACH CIRCUITS
5) LOW EZ DETECTION TIME MUST BE ADJUSTED ACCORDING TO THE TRAIN OPERATION.
FOR TRAIN OPERATION, REFER TO THE DEPARTMENT OF TRANSPORTATION.

SII 04 MAY 2016

PROPOSED
DESIGN NO. 14-0053
RED-IN YELLOW-OUT

AS INSTALLED
DATE _____
BY _____
(PRINT NAME)

PROPOSED D	M	Y	REVISIONS	D	C	COMPLETED D	M	Y	C

REGION SOUTHERN
SUB. PEORIA 362

SIGNALS AND COMMUNICATIONS HOMEWOOD
04 MAY 2016
DES. BEH
CH. BJW

GCP 4000 PROGRAM INFORMATION

SOUTH PEKIN, IL
VFW RD

PEO-011.80-11

DOT#292 680C

peo-011.80-11.dgn
13-MAY-2016

SIEMENS INDUSTRY INC			
DES.: BEH	DATE: 04/05/16	JOB NO.: PICA10767	
CKD.: BJW	ISSUE DATE: N/A	EST. NO.: XP-8133	
DRN.: BEH	PLAN NO.: N/A	SHEET 11 OF 19	
P TIME: 17:00	P DATE: 13-MAY-2016	CAD ID.: CTN-720.60-01	

SIEMENS INDUSTRY INC
LOUISVILLE DIVISION, LOUISVILLE, KY

REVISIONS				
NO.	DATE	BY	DESCRIPTION	APP. BY
1				
2				
3				
4				
5				

TO CONFIGURE SEARII & SEARIII PRESS SITE SETUP KEY. USE ARROW KEYS TO MAKE SELECTION, PRESS ENTER AFTER SELECTION HAS BEEN MADE.

STAGE 1		
PROGRAM MENU QUESTIONS	PROGRAM	OPTIONS/RANGE
DATE/TIME?	CURRENT DATE/TIME	CURRENT DATE/TIME
AUTOMATIC DST ADJUSTMENT?	YES	YES, NO
TIME ZONE?	CENTRAL	EASTERN, CENTRAL, MOUNTAIN, PACIFIC, ALASKA, HAWAII, ATLANTIC, SASKATCHEWAN, NEWFOUNDLAND
SITE NAME?	VFW RD	STREET NAME
MILE POST?	011.80	MILEAGE
DOT/CROSSING IS #?	292680C	123456A
TESTER TYPE?	CROSSING	CROSSING, WAYSIDE
DATE FORMAT?	dd-mm-yyyy	mm-dd-yyyy, dd-mm-yyyy
TEMPERATURE FORMAT?	FAHRENHEIT	FAHRENHEIT, CELSIUS
INDICATE HOLD?	0	SECONDS
SITE TYPE?	COLLECTOR	NO COM, BULLHORN, DIALUP, NODE, COLLECTOR
SITE ATCS ADDRESS?	7.103.362.011.99.01	7.RRR.LLL.GGG.99.01
OFFICE ATCS ADDRESS?	2.103.00.0000	2.RRR.NN.DDDD
FOR NODE USE: PRIMARY HOP ADDR?		7.RRR.LLL.GGG.00.01
FOR NODE USE: BACKUP HOP ADDR1?		7.RRR.LLL.GGG.00.01
FOR NODE USE: BACKUP HOP ADDR2?		7.RRR.LLL.GGG.00.01
FOR COLLECTOR USE: POLL ID?	1	1-99
FOR COLLECTOR USE: MODE?	GEN/ATCS	GEN/ATCS, GENISYS
FOR COLLECTOR USE: WAMS/XID?	ENABLED	ENABLED, DISABLE
FOR COLLECTOR USE: OFFICE COMM. DEVICE?	WAG (ECHELON)	DIRECT (RS232) MCM (RS232) MCM (ECHELON) SPREAD SPEC (ECHELON) DIAL MODEM (RS232) S200 RADIO (RS422)
FOR COLLECTOR USE: OFFICE PHONE NUMBER?		PHONE NUMBER OF WAMS
FOR COLLECTOR USE: INIT STRING?		OPTIONAL HAYES MODEM INITIALIZATION STRING
FOR COLLECTOR USE: FIELD COMM. DEVICE?		VHF COMM. (ECHELON) VHF COMM. (RS232) SPREAD SPEC (ECHELON) SPREAD SPEC (RS232)
USER PORT?	57600, 8, N, 1, N	BAUD, DATA BITS, PARITY, STOP BITS, FLOW CONTROL
AUX PORT?	9600, 8, N, 1, N	BAUD, DATA BITS, PARITY, STOP BITS, FLOW CONTROL

YOU WILL NOW SEE A MESSAGE "PLEASE WAIT COMPILING STAGE 1"
CONTINUE TO NEXT PROGRAM MENU QUESTIONS.

STAGE 2				
QUESTION	PROGRAM	SELECTION 1 MINIMUM	SELECTION 2 MAXIMUM)	CONDITION FOR MENU DISPLAY
RESET NAMES / MODULES ?	NO	YES	NO	ALWAYS
CROSSING CONFIGURATION ?	NORMAL	NORMAL	SPLIT GATE NOTE 1	ALWAYS
AND1 USED AS XR?	YES	NO	YES	ALWAYS
AND2 USED AS XR?	NO	NO	YES	ALWAYS
AND3 USED AS XR?	NO	NO	YES	ALWAYS
AND4 USED AS XR?	NO	NO	YES	ALWAYS
AND5 USED AS XR?	NO	NO	YES	ALWAYS
AND6 USED AS XR?	NO	NO	YES	ALWAYS
AND7 USED AS XR?	NO	NO	YES	ALWAYS
AND8 USED AS XR?	NO	NO	YES	ALWAYS
XR CONTROLLED BY FOREIGN RR?	NO	AND1	AND8	CROSSING CONFIGURATION = SPLIT GATE
ENTRANCE GATES ?	4	0	8	ALWAYS
GATE CONTROLLED BY FOREIGN RR?	NONE	NONE	TSS4	CROSSING CONFIGURATION = SPLIT GATE
GATE DESCENT TIME (SECONDS)	11	7	20	GATES > 0
GATE POSITION FAIL TIME (SECONDS) ?	17	10	60	GATES > 0
BATTERY BANKS ?	2	1	3	ALWAYS
BATT MON USED ?	NO	NO	YES	ALWAYS
INTERNAL CROSSING CONTROLLERS ?	2	0	2	ALWAYS
EXTERNAL CROSSING CONTROLLERS ?	0	0	2	CROSSING CONTROLLER = YES
ALLOW DTMF CONTROL ?	NO	NO	YES	ALWAYS
COUNTRY	N/A	CANADA	US	ALLOW DTMF CONTROL = YES
DTMF CONTROL WITH PREMPTION ?	N/A	NO	YES	ALLOW DTMF CONTROL = YES
POK ANNOUNCEMENT TO VHF ?	N/A	NO	YES	ALLOW DTMF CONTROL = YES
VHF VOICE CHANNEL ?	N/A	1	8	ALLOW DTMF CONTROL = YES
VHF DATA CHANNEL ?	N/A	1	8	ALLOW DTMF CONTROL = YES
DIGIT #1 ?	N/A	0	9	ALLOW DTMF CONTROL = YES
DIGIT #2 ?	N/A	0	9	ALLOW DTMF CONTROL = YES
DIGIT #3 ?	N/A	0	9	ALLOW DTMF CONTROL = YES
DIGIT #4 ?	N/A	0	9	ALLOW DTMF CONTROL = YES
DIGIT #5 ?	N/A	0	9	ALLOW DTMF CONTROL = YES
TIME-OUT FOR DTMF REQUEST #1 ?	N/A	0	240	ALLOW DTMF CONTROL = YES
TIME-OUT FOR DTMF REQUEST #2 ?	N/A	0	240	ALLOW DTMF CONTROL = YES
TIME-OUT FOR DTMF REQUEST #3 ?	N/A	0	240	ALLOW DTMF CONTROL = YES
TIME-OUT FOR DTMF REQUEST #4 ?	N/A	0	240	ALLOW DTMF CONTROL = YES

STAGE 2 CONT'D				
QUESTION	PROGRAM	SELECTION 1 MINIMUM	SELECTION 2 MAXIMUM	CONDITION FOR MENU DISPLAY
TIME-OUT FOR DTMF REQUEST #5 ?	N/A	0	240	ALLOW DTMF CONTROL = YES
TIME-OUT FOR DTMF REQUEST #6 ?	N/A	0	240	ALLOW DTMF CONTROL = YES
TIME-OUT FOR DTMF REQUEST #7 ?	N/A	0	240	ALLOW DTMF CONTROL = YES
ISLAND RELEASE DTMF REQUEST #1 ?	N/A	0	6	TIME-OUT FOR DTMF REQUEST #1 > 0
ISLAND RELEASE DTMF REQUEST #2 ?	N/A	0	6	TIME-OUT FOR DTMF REQUEST #2 > 0
ISLAND RELEASE DTMF REQUEST #3 ?	N/A	0	6	TIME-OUT FOR DTMF REQUEST #3 > 0
ISLAND RELEASE DTMF REQUEST #4 ?	N/A	0	6	TIME-OUT FOR DTMF REQUEST #4 > 0
ISLAND RELEASE DTMF REQUEST #5 ?	N/A	0	6	TIME-OUT FOR DTMF REQUEST #5 > 0
ISLAND RELEASE DTMF REQUEST #6 ?	N/A	0	6	TIME-OUT FOR DTMF REQUEST #6 > 0
ISLAND RELEASE DTMF REQUEST #7 ?	N/A	0	6	TIME-OUT FOR DTMF REQUEST #7 > 0
ILOD MODULES ?	2	0	4	ALWAYS
ANY LED BULBS USED ?	YES	NO	YES	ILOD MODULES > 0
AUTO INSPECTION ?	NO	YES	NO	ALWAYS
BELL SENSORS ?	2	0	8	ALWAYS
BELL SENSORS TSS1 ?	YES	NO	YES	BELL SENSORS > 0
BELL SENSORS TSS2 ?	YES	NO	YES	BELL SENSORS > 0
BELL SENSORS TSS3 ?	NO	NO	YES	BELL SENSORS > 0
BELL SENSORS TSS4 ?	NO	NO	YES	BELL SENSORS > 0
BELL SENSORS TSS5 ?	NO	NO	YES	BELL SENSORS > 0
BELL SENSORS TSS6 ?	NO	NO	YES	BELL SENSORS > 0
BELL SENSORS TSS7 ?	NO	NO	YES	BELL SENSORS > 0
BELL SENSORS TSS8 ?	NO	NO	YES	BELL SENSORS > 0
BELL ON ?	GATES LOWERING	GATES LOWERING GATES MOVING ALWAYS		BELL SENSORS > 0
BATTERY PERCENT FOR ALARM ?	85	0	100	ALWAYS
GFT'S ?	YES	YES	NO	ALWAYS
BATTERIES ON GFT1 ?	2	1	2	GFT'S = YES
GATE UP SOURCE ?	GP	TSS	GP	GATE > 0
GATE DOWN SOURCE ?	GD	TIP , TSS	GD	GATES > 0
USE CELL MODEM NON-CRITICAL FEATURE ?	NO	NO	YES	ALWAYS
FULL APPROACH MOVE ALARMS ?	ACTIVATE	ACTIVATE DO NOT ACTIVATE		ALWAYS

YOU WILL NOW SEE A MESSAGE "PLEASE WAIT COMPILING STAGE 2" CONTINUE TO NEXT PROGRAM MENU QUESTIONS.

STAGE 3	
PROGRAM MENU QUESTIONS	
EDIT DIGITAL INPUTS	NO
EDIT BATTERIES	NO
EDIT RELAYS	NO
EDIT TEST LEDS	NO
EDIT ILOD SENSORS	NO
EDIT VHF SETTINGS	NO
GCP4K ATCS SUBNODE?	16

SAVE CONFIGURATION

SEAR III SOFTWARE INFORMATION	
EXECUTIVE:	9V725 REV. A01U
APPLICATION:	9VC45 REV. A01A

NOTES
1) ADDITIONAL OPTIONS: DUAL CROSSING, EXTERNAL ENTRANCE GATE CONTROLLERS.

SII 04 MAY 2016

PROPOSED
DESIGN NO. 14-0053
RED-IN YELLOW-OUT

AS INSTALLED
DATE _____
BY _____
(PRINT NAME)

PROPOSED D	M	Y	REVISIONS	D	C	COMPLETED D	M	Y	C

REGION SOUTHERN
SUB. PEORIA 362
SIGNALS AND COMMUNICATIONS HOMEWOOD
04 MAY 2016
DES. BEH
CH. BJW
GCP 4000 SEAR III SETUP & PROGRAM
SOUTH PEKIN, IL
VFW RD
PEO-011.80-12
DOT#292 680C

SIEMENS INDUSTRY INC
DES.: BEH | DATE: 04/05/16 | JOB NO.: PICA10767
CKD.: BJW | ISSUE DATE: N/A | EST. NO.: XP-8133
DRN.: BEH | PLAN NO.: N/A | SHEET 12 OF 19
P TIME: 17:00 | P DATE: 13-MAY-2016 | CAD ID.: CTN-720.60-01

SIEMENS INDUSTRY INC
LOUISVILLE DIVISION, LOUISVILLE, KY

peo-011.80-12.dgn
13-MAY-2016

GCP 4000
CALIBRATION HISTORY

INITIAL SET UP BY: _____ DATE: _____

		APPROACH DISTANCE CALIBRATION										LINEARIZATION CALIBRATION	
		EZ/EX VALUES (TRACK UNOCCUPIED)				HARD WIRE SHUNT AT TERMINATION SHUNT				COMPUTED APPROACH DISTANCE		LINEARIZATION STEP VALUE	
		EZ		EX		EZ		EX					
		NRML	STBY	NRML	STBY	NRML	STBY	NRML	STBY	NRML	STBY	NRML	STBY
NORTH	TRACK 1												
SOUTH	TRACK 1												

GCP 4000
CALIBRATION HISTORY

INITIAL SET UP BY: _____ DATE: _____

		APPROACH DISTANCE CALIBRATION										LINEARIZATION CALIBRATION	
		EZ/EX VALUES (TRACK UNOCCUPIED)				HARD WIRE SHUNT AT TERMINATION SHUNT				COMPUTED APPROACH DISTANCE		LINEARIZATION STEP VALUE	
		EZ		EX		EZ		EX					
		NRML	STBY	NRML	STBY	NRML	STBY	NRML	STBY	NRML	STBY	NRML	STBY
NORTH	TRACK 1												
SOUTH	TRACK 1												

GCP 4000
CALIBRATION HISTORY

INITIAL SET UP BY: _____ DATE: _____

		APPROACH DISTANCE CALIBRATION										LINEARIZATION CALIBRATION	
		EZ/EX VALUES (TRACK UNOCCUPIED)				HARD WIRE SHUNT AT TERMINATION SHUNT				COMPUTED APPROACH DISTANCE		LINEARIZATION STEP VALUE	
		EZ		EX		EZ		EX					
		NRML	STBY	NRML	STBY	NRML	STBY	NRML	STBY	NRML	STBY	NRML	STBY
NORTH	TRACK 1												
SOUTH	TRACK 1												

REVISIONS

NO.	DATE	BY	DESCRIPTION	APP.	BY
1					
2					
3					
4					
5					

SIEMENS INDUSTRY INC

DES.: BEH	DATE: 04/05/16	JOB NO.: PICA10767	
CKD.: BJW	ISSUE DATE: N/A	EST. NO.: XP-8133	
DRN.: BEH	PLAN NO.: N/A	SHEET 13 OF 19	
P TIME: 17:00	P DATE: 13-MAY-2016	CAD ID.: CTN-720.60-01	

SII 04 MAY 2016

PROPOSED
DESIGN NO. 14-0053
RED-IN YELLOW-OUT

AS INSTALLED
DATE _____
BY _____
(PRINT NAME)

PROPOSED D	M	Y	REVISIONS	D	C	COMPLETED D	M	Y	C

REGION SOUTHERN
SUB. PEORIA 362

SIGNALS AND COMMUNICATIONS HOMEWOOD
04 MAY 2016
DES. BEH
CH. BJW

GCP 4000 CALIBRATION HISTORY

SOUTH PEKIN, IL
VFW RD

PEO-011.80-13

DOT#292 680C

SIEMENS INDUSTRY INC
LOUISVILLE DIVISION, LOUISVILLE, KY

peo-011.80-13.dgn
13-MAY-2016

REVISIONS				
NO.	DATE	BY	DESCRIPTION	APP. BY
1				
2				
3				
4				
5				

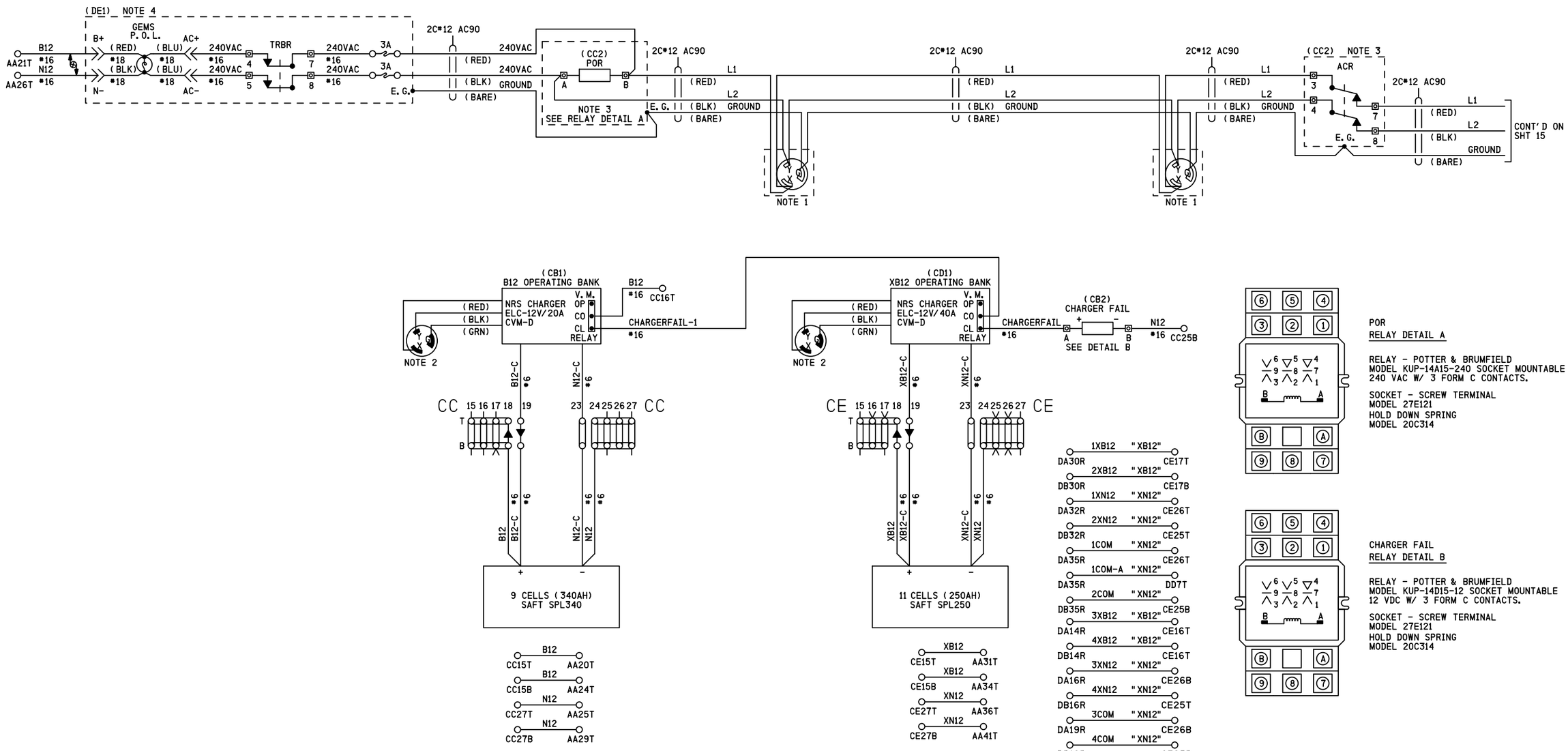

POR
RELAY DETAIL A

RELAY - POTTER & BRUMFIELD
MODEL KUP-14A15-240 SOCKET MOUNTABLE
240 VAC W/ 3 FORM C CONTACTS.

SOCKET - SCREW TERMINAL
MODEL 27E121
HOLD DOWN SPRING
MODEL 20C314

CHARGER FAIL
RELAY DETAIL B

RELAY - POTTER & BRUMFIELD
MODEL KUP-14D15-12 SOCKET MOUNTABLE
12 VDC W/ 3 FORM C CONTACTS.

SOCKET - SCREW TERMINAL
MODEL 27E121
HOLD DOWN SPRING
MODEL 20C314

NOTES

1) 20A 250V TWIST LOCK RECEPTACLE HUBBELL HBL 2320
2) PLUG HUBBELL HBL 2321 REFER TO PS-902 PAGE 6
3) PART OF SEARIII POWER CONTROL AND INDICATION RELAY JUNCTION BOX
4) PART OF POWER OFF INDICATOR LIGHT REPEATER RELAY JUNCTION BOX (REFER TO PS-907 SHT 2A)
5) ALL WIRING #10 AWG UNLESS OTHERWISE NOTED

" " -DENOTES REFERENCE, NOT WIRE TAG
<< -DENOTES WAGO TERMINAL
-DENOTES TWISTED PAIR

SIEMENS INDUSTRY INC
LOUISVILLE DIVISION, LOUISVILLE, KY

SIEMENS INDUSTRY INC			
DES.: BEH	DATE: 04/05/16	JOB NO.: PICA10767	
CKD.: BJW	ISSUE DATE: N/A	EST. NO.: XP-8133	
DRN.: BEH	PLAN NO.: N/A	SHEET 14 OF 19	
P TIME: 17:00	P DATE: 13-MAY-2016	CAD ID.: CTN-720.60-01	

SII 04 MAY 2016

PROPOSED
DESIGN NO. 14-0053
RED-IN YELLOW-OUT

AS INSTALLED
DATE
BY
(PRINT NAME)

PROPOSED D	M	Y	REVISIONS	D	C	COMPLETED D	M	Y	C

REGION SOUTHERN
SUB. PEORIA 362

SIGNALS AND COMMUNICATIONS HOMEWOOD
04 MAY 2016
DES. BEH
CH. BJW

DC DISTRIBUTION
SOUTH PEKIN, IL
VFW RD

PEO-011.80-14

DOT#292 680C

peo-011.80-14.dgn
13-MAY-2016

REVISIONS				
NO.	DATE	BY	DESCRIPTION	APP. BY
1				
2				
3				
4				
5				

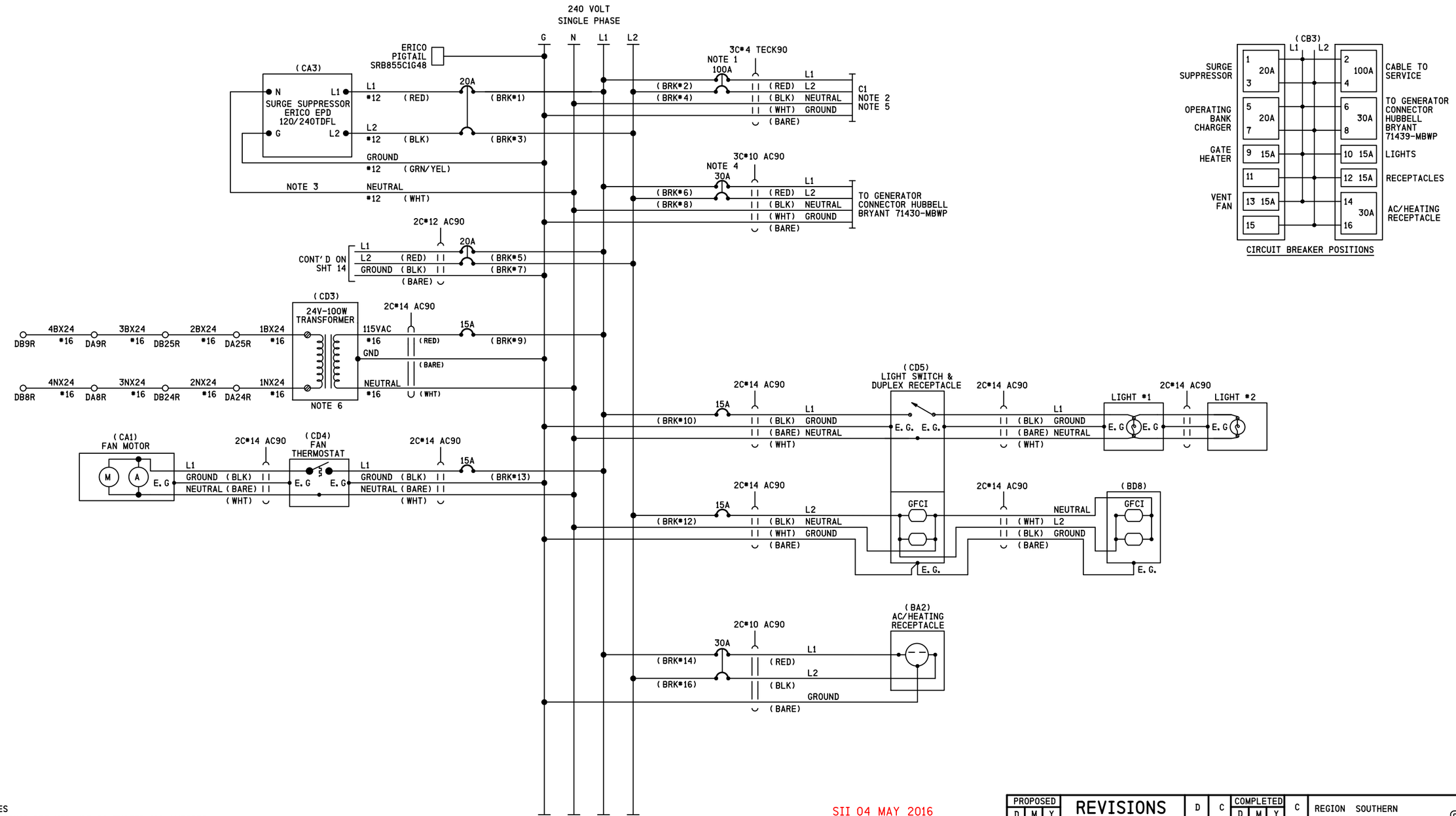

NOTES

1) CIRCUIT BREAKER NOT TO EXCEED 100 AMPERES RETAINING KIT PK2MB MUST BE USED WITH 100A BREAKER
2) FEEDER CIRCUIT BREAKER AT STUB POLE SERVICE PANEL NOT TO EXCEED 100 AMPERES.
3) KEEP LEADS AS SHORT AS POSSIBLE
4) A TRANSFER SWITCH KIT MUST BE INSTALLED BETWEEN THE SERVICE DISCONNECT BREAKER AND THE GENERATOR HOOK UP MANUAL TRANSFER EQUIPMENT KIT PK4DTIM4LA
5) WHERE SEPARATE GROUND WIRE EXISTS BETWEEN THE SERVICE AND THE LOAD CENTER, REMOVE THE BRASS COLORED BONDING SCREW (REFER TO SCHEMATIC ON BOX COVER FOR EXACT LOCATION)
6) REFER TO PS-904

SIII 04 MAY 2016

PROPOSED
DESIGN NO. 14-0053
RED-IN YELLOW-OUT

AS INSTALLED
DATE _____
BY _____
(PRINT NAME)

PROPOSED D	M	Y	REVISIONS	D	C	COMPLETED D	M	Y	C

REGION SOUTHERN
SUB. PEORIA 362

SIGNALS AND COMMUNICATIONS HOMEWOOD
04 MAY 2016
DES. BEH
CH. BJW

AC DISTRIBUTION
SOUTH PEKIN, IL
VFW RD

PEO-011.80-15

DOT#292 680C

SIEMENS INDUSTRY INC

DES.: BEH	DATE: 04/05/16	JOB NO.: PICA10767	
CKD.: BJW	ISSUE DATE: N/A	EST. NO.: XP-8133	
DRN.: BEH	PLAN NO.: N/A	SHEET 15 OF 19	
P. TIME: 17:00	P. DATE: 13-MAY-2016	CAD ID.: CTN-720.60-01	

SIEMENS INDUSTRY INC
LOUISVILLE DIVISION, LOUISVILLE, KY

peo-011.80-15.dgn
13-MAY-2016

REVISIONS				
NO.	DATE	BY	DESCRIPTION	APP. BY
1				
2				
3				
4				
5				

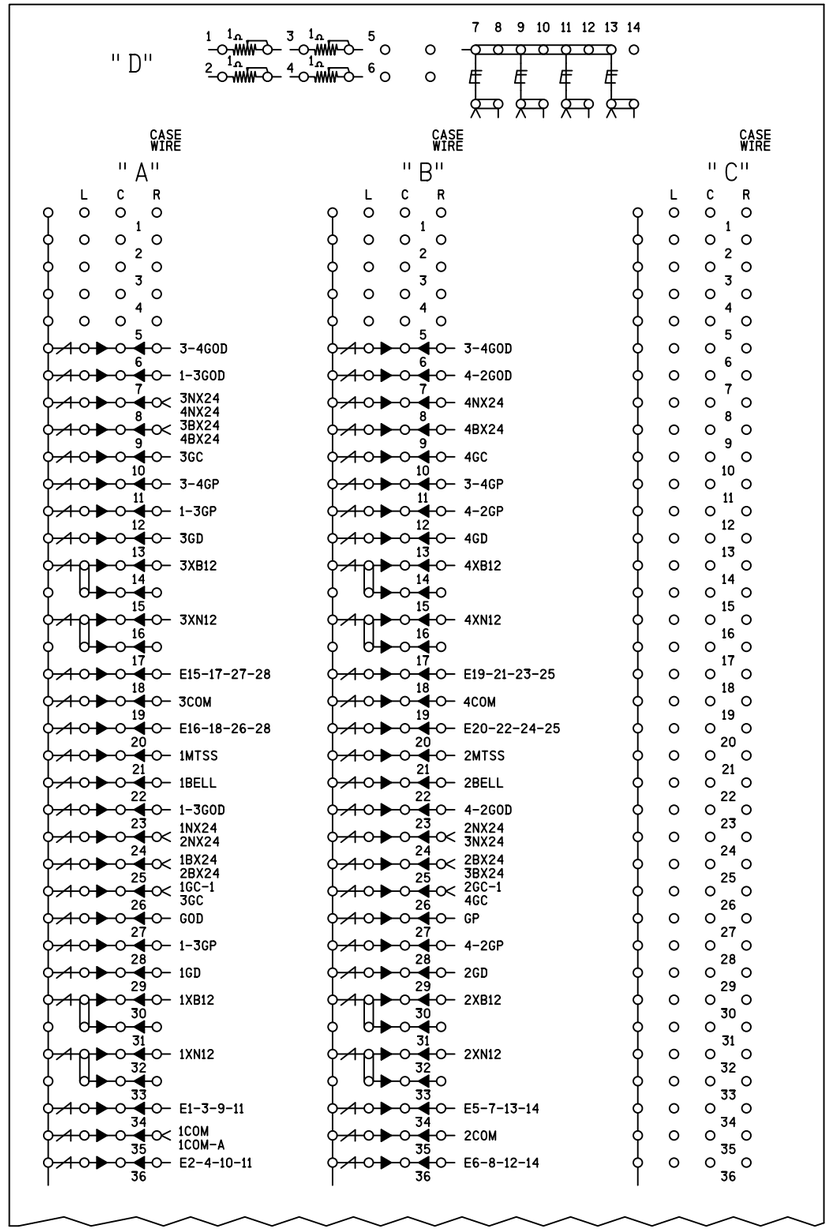

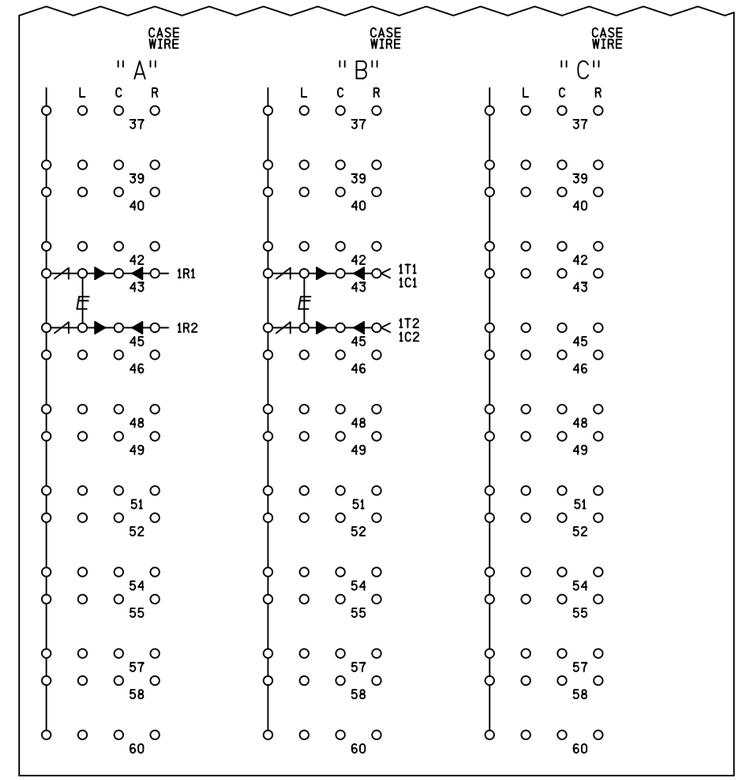

NOTES

E DENOTES HD EQUALIZER CN# 02-32-391
SAFETRAN # 4000-44700-001X

DENOTES 50V ARRESTOR CN# 02-00-605
ERICO # ETSP2-30-50

DENOTES GROUND PLANE

DENOTES TEST LINK

SIEMENS INDUSTRY INC			
DES.: BEH	DATE: 04/05/16	JOB NO.: PICA10767	
CKD.: BJW	ISSUE DATE: N/A	EST. NO. XP-8133	
DRN.: BEH	PLAN NO.: N/A	SHEET 16 OF 19	
P. TIME: 17:00	P. DATE: 13-MAY-2016	CAD ID.: CTN-720.60-01	

SIEMENS INDUSTRY INC
LOUISVILLE DIVISION, LOUISVILLE, KY

SII 04 MAY 2016

PROPOSED
DESIGN NO. 14-0053
RED-IN YELLOW-OUT

AS INSTALLED
DATE _____
BY _____
(PRINT NAME)

PROPOSED			REVISIONS	D	C	COMPLETED			C
D	M	Y				D	M	Y	

REGION SOUTHERN
SUB. PEORIA 362

SIGNALS AND COMMUNICATIONS HOMEWOOD
04 MAY 2016
DES. BEH
CH. BJW

MAIN TERMINAL BOARD
INSIDE DETAIL SIDE D
SOUTH PEKIN, IL
VFW RD

PEO-011.80-16

DOT#292 680C

peo-011.80-16.dgn
13-MAY-2016

REVISIONS				
NO.	DATE	BY	DESCRIPTION	APP. BY
1				
2				
3				
4				
5				

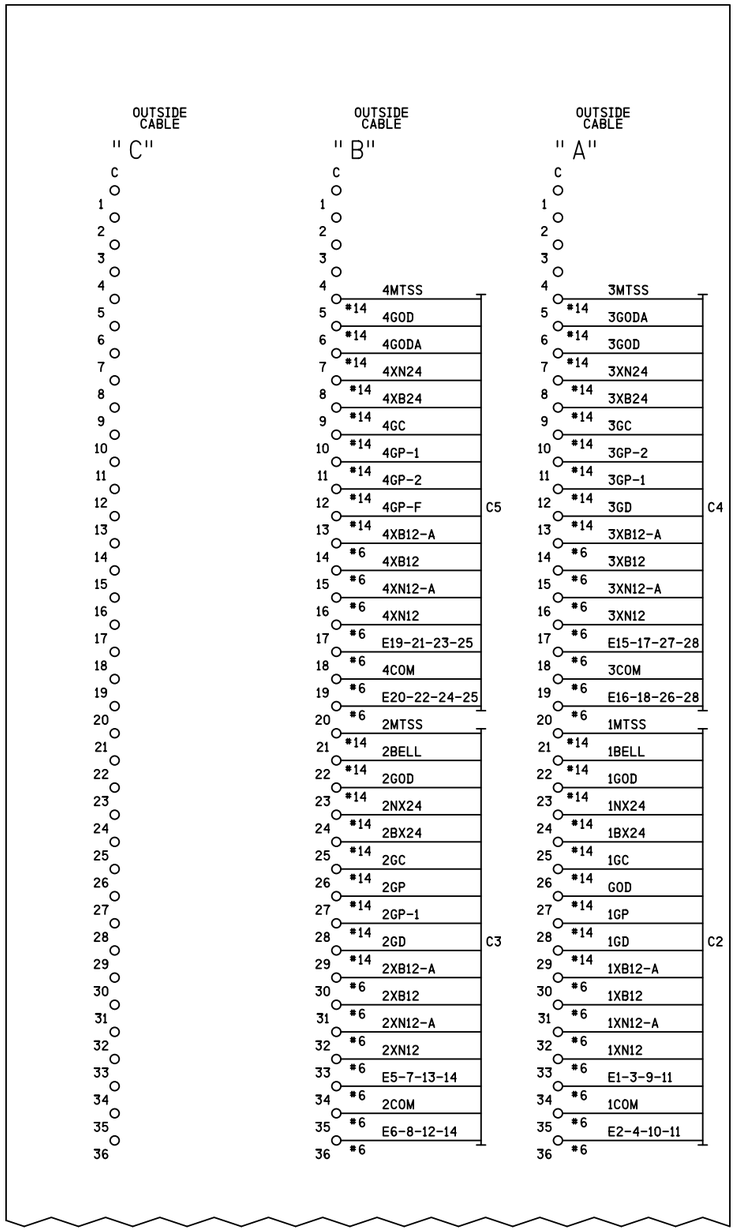

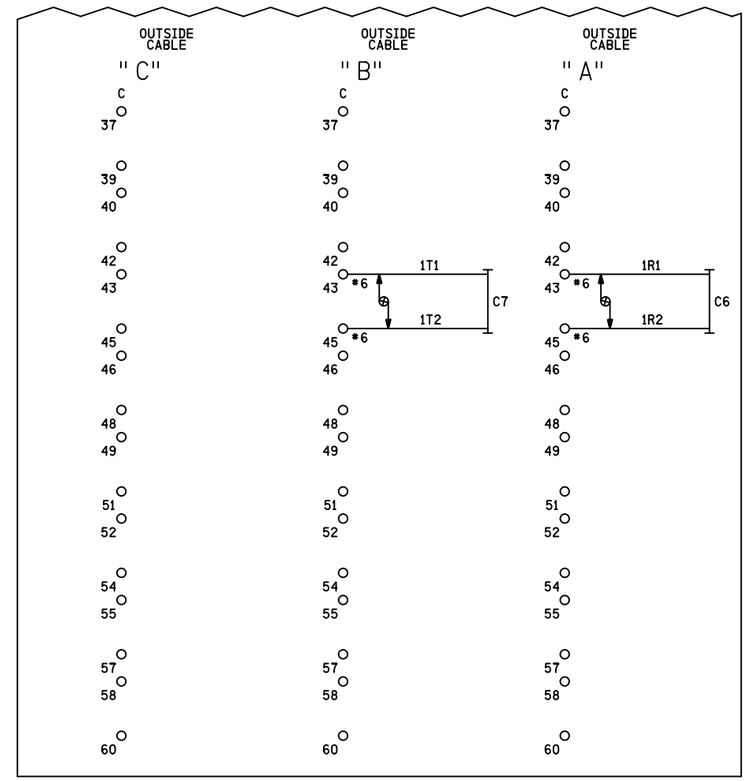

NOTES

DENOTES TWISTED PAIR

SIEMENS INDUSTRY INC		
DES.: BEH	DATE: 04/05/16	JOB NO.: PICA10767
CKD.: BJW	ISSUE DATE: N/A	EST. NO.: XP-8133
DRN.: BEH	PLAN NO.: N/A	SHEET 17 OF 19
P TIME: 17:00	P DATE: 13-MAY-2016	CAD ID.: CTN-720, 60-01

SII 04 MAY 2016

PROPOSED

DESIGN NO. 14-0053

RED-IN YELLOW-OUT

AS INSTALLED

DATE _____

BY _____

(PRINT NAME)

PROPOSED D	M	Y	REVISIONS	D	C	COMPLETED D	M	Y	C

REGION SOUTHERN

SUB. PEORIA 362

SIGNALS AND COMMUNICATIONS HOMEWOOD

DES. BEH

04 MAY 2016

CH. BJW

MAIN TERMINAL BOARD
OUTSIDE DETAIL SIDE D
SOUTH PEKIN, IL

VFW RD

PEO-011.80-17

DOT#292 680C

SIEMENS INDUSTRY INC
LOUISVILLE DIVISION, LOUISVILLE, KY

peo-011.80-17.dgn
13-MAY-2016

REVISIONS				
NO.	DATE	BY	DESCRIPTION	APP. BY
1				
2				
3				
4				
5				

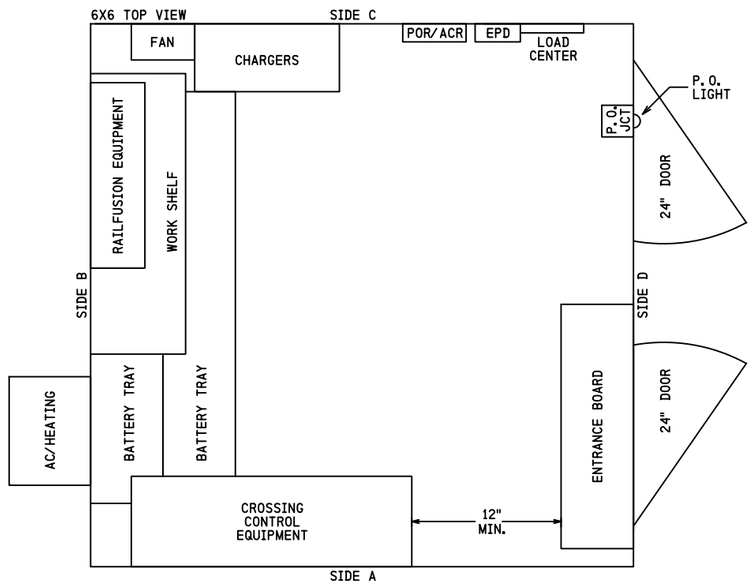

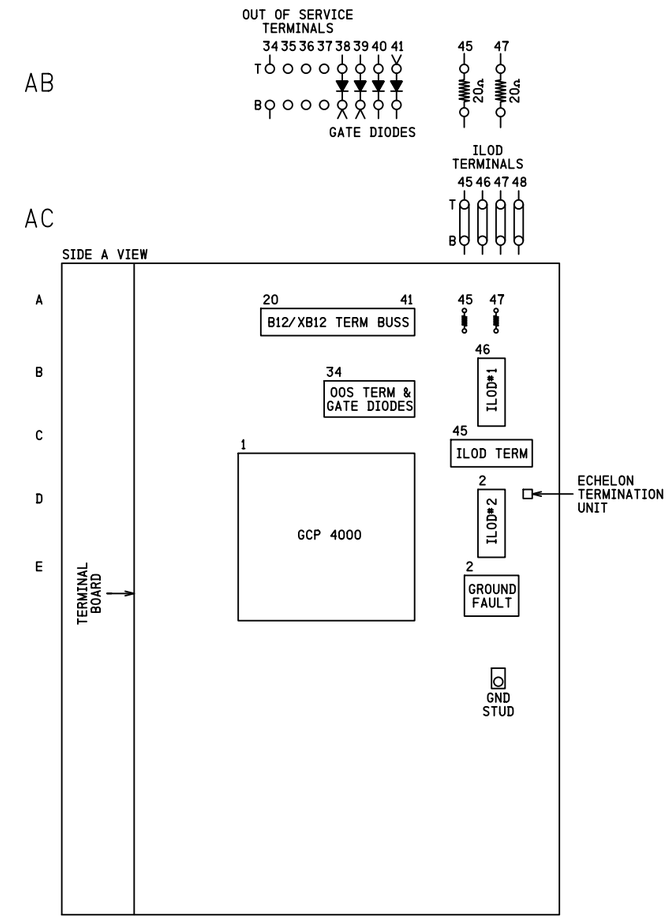

SIEMENS INDUSTRY INC			
DES.: BEH	DATE: 04/05/16	JOB NO.: PICA10767	
CKD.: BJW	ISSUE DATE: N/A	EST. NO.: XP-8133	
DRN.: BEH	PLAN NO.: N/A	SHEET 18 OF 19	
P TIME: 17:00	P DATE: 13-MAY-2016	CAD ID.: CTN-720.60-01	

SIEMENS INDUSTRY INC
LOUISVILLE DIVISION, LOUISVILLE, KY

SII 04 MAY 2016

PROPOSED
DESIGN NO. 14-0053
RED-IN YELLOW-OUT

AS INSTALLED
DATE _____
BY _____
(PRINT NAME)

PROPOSED			REVISIONS	D	C	COMPLETED			C
D	M	Y				D	M	Y	

REGION SOUTHERN
SUB. PEORIA 362

SIGNALS AND COMMUNICATIONS HOMEWOOD
04 MAY 2016
DES. BEH
CH. BJW

BUNGALOW LAYOUT
TOP VIEW & SIDE A
SOUTH PEKIN, IL
VFW RD

PEO-011.80-18

DOT#292 680C

peo-011.80-18.dgn
13-MAY-2016

REVISIONS				
NO.	DATE	BY	DESCRIPTION	APP. BY
1				
2				
3				
4				
5				

peo-011.80-19.dgn
13-MAY-2016

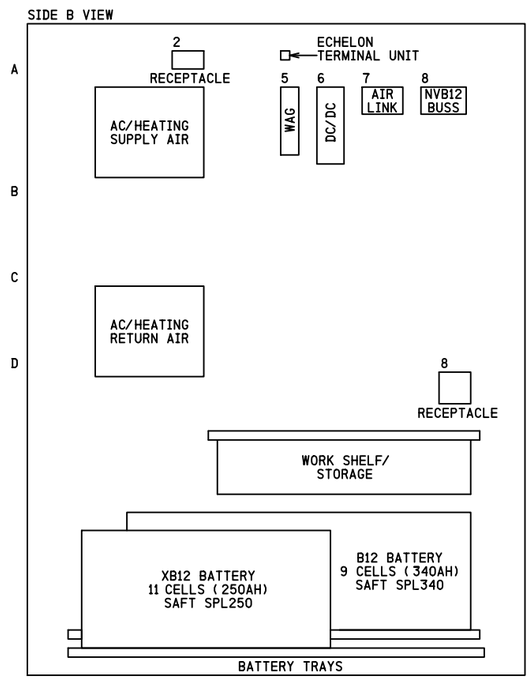

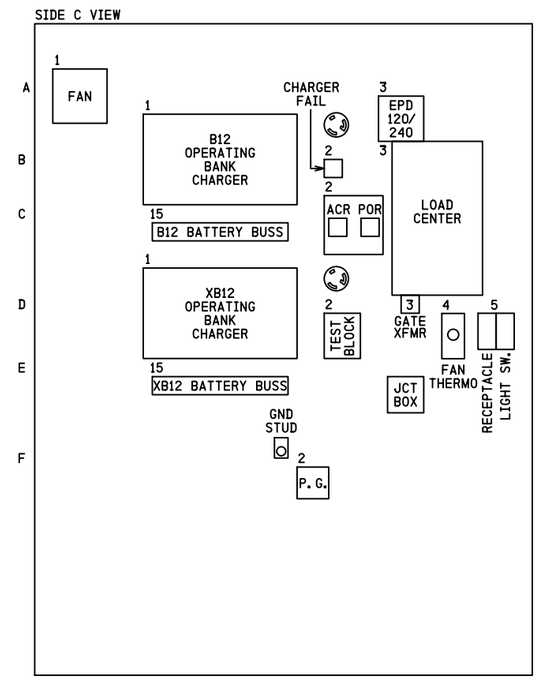

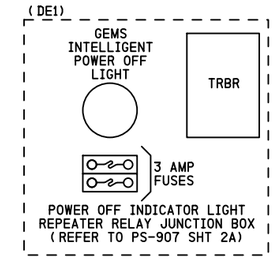

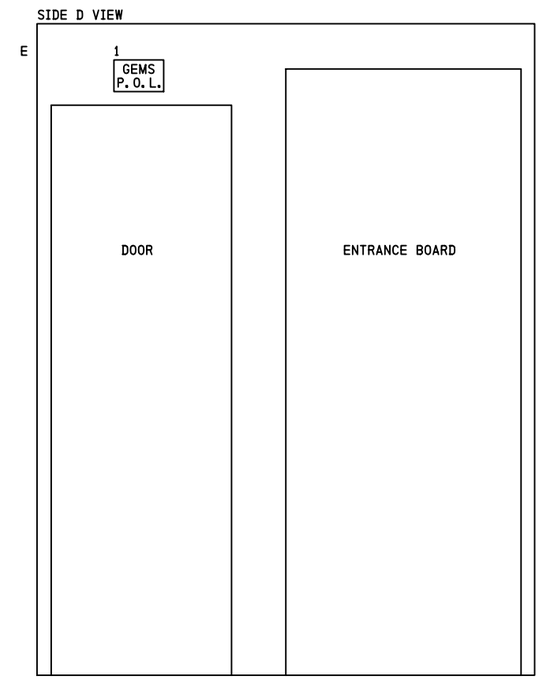

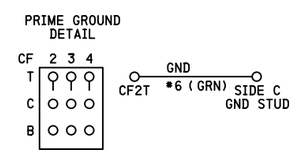

SII 04 MAY 2016

PROPOSED
DESIGN NO. 14-0053
RED-IN YELLOW-OUT

AS INSTALLED
DATE _____
BY _____
(PRINT NAME)

PROPOSED			REVISIONS	D	C	COMPLETED			C
D	M	Y				D	M	Y	

REGION SOUTHERN
SUB. PEORIA 362

SIGNALS AND COMMUNICATIONS HOMEWOOD
04 MAY 2016
DES. BEH
CH. BJW

BUNGALOW LAYOUT
SIDES B, C, & D
SOUTH PEKIN, IL
VFW RD

PEO-011.80-19

DOT#292 680C

20

SIEMENS INDUSTRY INC

DES.: BEH	DATE: 04/05/16	JOB NO.: PICA10767	
CKD.: BJW	ISSUE DATE: N/A	EST. NO.: XP-8133	
DRN.: BEH	PLAN NO.: N/A	SHEET 19 OF 19	
P TIME: 17:00	P DATE: 13-MAY-2016	CAD ID.: CTN-720.60-01	

SIEMENS INDUSTRY INC
LOUISVILLE DIVISION, LOUISVILLE, KY