REVISIONS				
NO.	DATE	BY	DESCRIPTION	APP. BY
1				
2				
3				
4				
5				

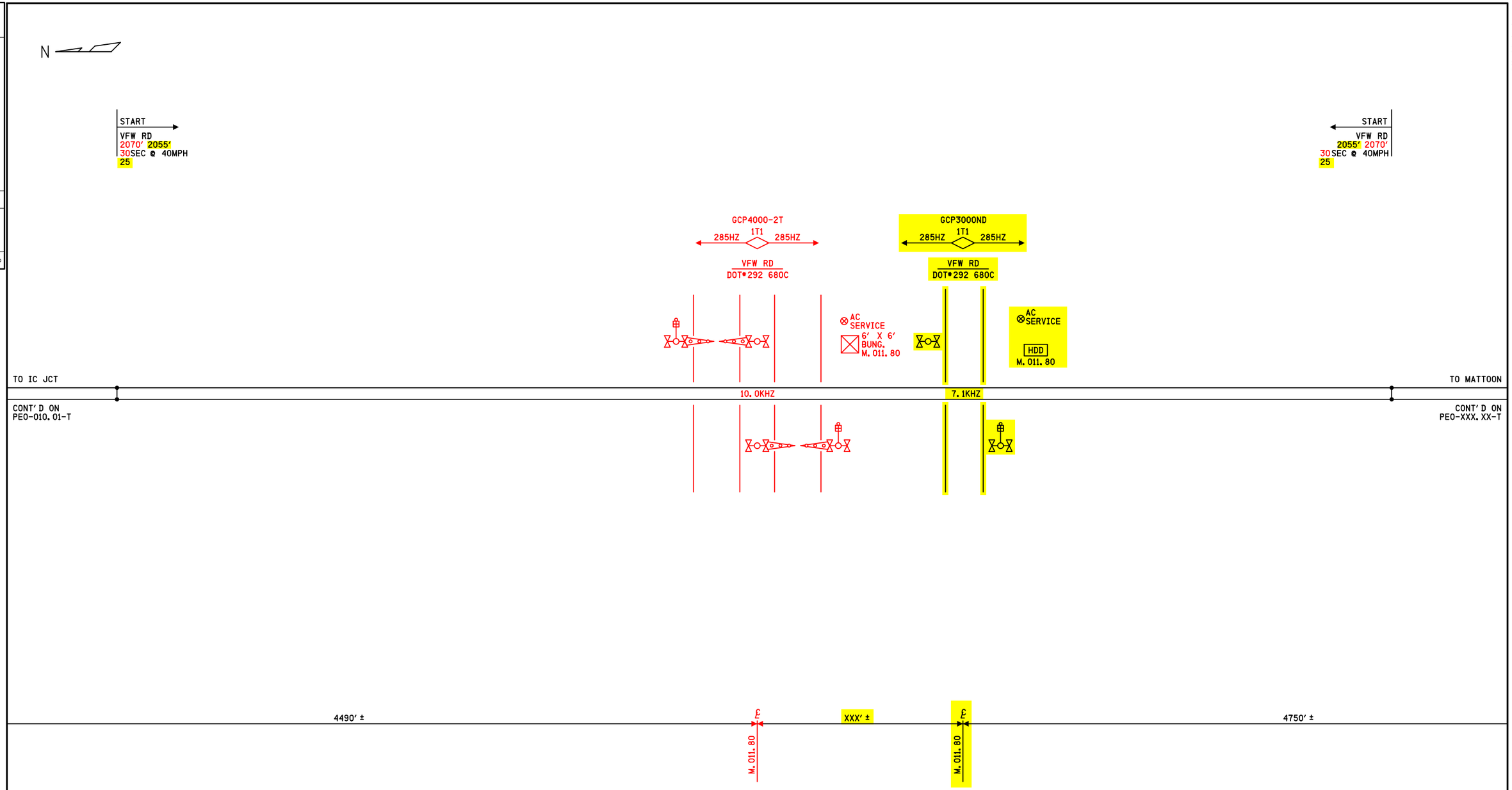

NOTES

1) ALL APPROACH DISTANCES MEASURED FROM TRACK LEADS

DENOTES #6 HARDWIRE SHUNT

SII 15 MAR 2016

PROPOSED
DESIGN NO. 14-0053
RED-IN YELLOW-OUT

AS INSTALLED
DATE _____
BY _____
(PRINT NAME)

PROPOSED D	PROPOSED M	PROPOSED Y	REVISIONS	D	C	COMPLETED D	COMPLETED M	COMPLETED Y	C
			PLAN REDRAWN			15	03	16	KLT
15	03	16	M.011.80 UPGRADE	KLT	BJW				

REGION SOUTHERN
SUB. PEORIA 362

SIGNALS AND COMMUNICATIONS HOMEWOOD
DES.
CH.

TRACK PLAN
M.011.40 TO M.012.19

PEO-011.80-T

peo-011.80-t.dgn
13-MAY-2016

SIEMENS INDUSTRY INC

DES.: KLT	DATE: 02/15/14	JOB NO.: PICA1xxxx	
CKD.: BJW	ISSUE DATE: N/A	EST. NO.: UXXD04109	
DRN.: KLT	PLAN NO.: N/A	SHEET N/A OF N/A	
P TIME: 16:58	P DATE: 13-MAY-2016	CAD ID.: PEO-011.80-T	

SIEMENS INDUSTRY INC
LOUISVILLE DIVISION, LOUISVILLE, KY

peo-011.80-0.dgn
13-MAY-2016

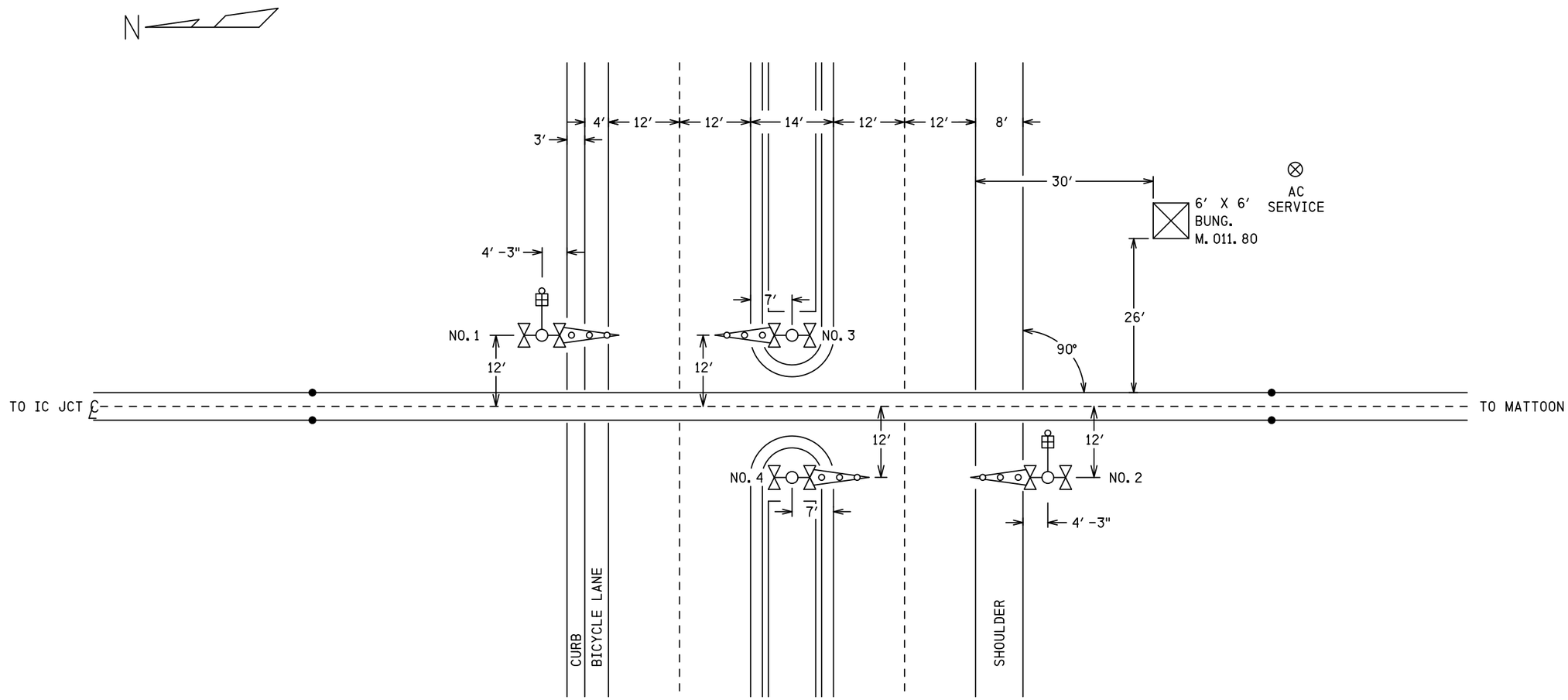

NOTES

1) 40 MPH DESIGN SPEED
2) 35 FEET MAXIMUM CLEARANCE DISTANCE
3) 162 FEET ISLAND DISTANCE
4) CONSTANT WARNING CONTROL
5) APPROACH CIRCUIT DISTANCE PROVIDES FOR:
   0 SEC CLEARANCE TIME
   0 SEC PREEMPTION TIME (0 SEC ADVANCE TIME)
   20 SEC MINIMUM WARNING TIME
   4 SEC GATE DESCENT DELAY
   10 SEC BUFFER TIME
   5 SEC EQUIPMENT REACTION TIME
6) 18 FEET NO. 1 GATE ARM LENGTH
   19 FEET NO. 2 GATE ARM LENGTH
7) 16 FEET NO. 3 GATE ARM LENGTH
   16 FEET NO. 4 GATE ARM LENGTH

SII 04 MAY 2016

PROPOSED
DESIGN NO. 14-0053
RED-IN YELLOW-OUT

AS INSTALLED
DATE _____
BY _____
(PRINT NAME)

PROPOSED D	M	Y	REVISIONS	D	C	COMPLETED D	M	Y	C

REGION SOUTHERN
SUB. PEORIA 362

SIGNALS AND COMMUNICATIONS HOMEWOOD
04 MAY 2016
DES. KLT
CH. BJW

SITUATION SKETCH
SCALE 1" = 20′
SOUTH PEKIN, IL
VFW RD

PEO-011.80-0

DOT# 292 680C

20

SIEMENS INDUSTRY INC
LOUISVILLE DIVISION, LOUISVILLE, KY

REVISIONS			
NO.	DATE	BY	DESCRIPTION	APP. BY
1				
2				
3				
4				
5				

FLASHING LIGHT UNITS ALIGNMENT TABLE

PRIMARY FRONT LIGHTS FOR VEHICLES							
SIG #	LIGHT #	ROUNDEL		ROAD SPEED	MINIMUM DISTANCE	RECOMMENDED DISTANCE	ALIGNMENT DISTANCE
		SIZE	TYPE	MPH	FT	FT	FT
1	1,2	12"	LED	55	625	950	
2	7,8	12"	LED	55	625	950	
3	15,16	12"	LED	55	625	950	
4	21,22	12"	LED	55	625	950	
BACK LIGHTS FOR VEHICLES							
SIG #	LIGHT #	ROUNDEL		ROAD SPEED	MINIMUM DISTANCE	RECOMMENDED DISTANCE	ALIGNMENT DISTANCE
		SIZE	TYPE	MPH	FT	FT	FT
1	3,4	12"	LED	N/A	N/A	N/A	50
2	5,6	12"	LED	N/A	N/A	N/A	50
3	17,18	12"	LED	N/A	N/A	N/A	50
4	19,20	12"	LED	N/A	N/A	N/A	50

NOTE
FIELD IS TO PROVIDE THE ACTUAL ALIGNMENT DISTANCE AS DETERMINED BY
SCP-706: ROAD CROSSING DEVICE LIGHT UNIT ALIGNMENT PROCEDURES

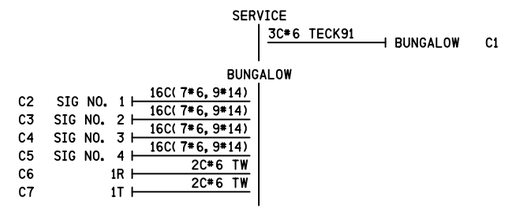

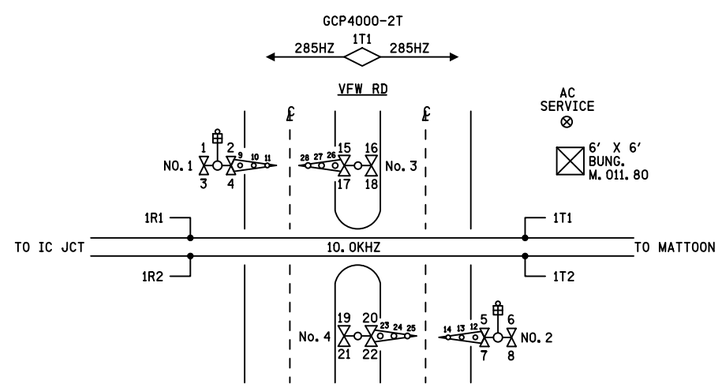

CONTENTS	SHEET NO.
SITUATION SKETCH	0
INDEX, CABLE & TRACK LAYOUT	01
GCP 4000 TRACK 1 & 2 MODULE CONNECTIONS	02
GCP 4000 CPUII+	03
GCP 4000 SEAR III & GFT	04
GCP 4000 SSCCIIII GATE CONTROLLERS & ILODS	05
GATE 1 MECH. CONTROL CIRCUITS SAFETRAN S-60	06
GATE 2 MECH. CONTROL CIRCUITS SAFTERAN S-60	07
GATE 3 MECH. CONTROL CIRCUITS SAFTERAN S-60	08
GATE 4 MECH. CONTROL CIRCUITS SAFETRAN S-60	09
GCP 4000 CHASSIS & MODULE LAYOUT	10
GCP 4000 PROGRAM INFORMATION	11
GCP 4000 SEAR III SETUP & PROGRAM	12
GCP 4000 CALIBRATION HISTORY	13
DC DISTRIBUTION	14
AC DISTRIBUTION	15
MAIN TERMINAL BOARD INSIDE DETAIL SIDE D	16
MAIN TERMINAL BOARD OUTSIDE DETAIL SIDE D	17
BUNGALOW LAYOUT TOP VIEW & SIDE A	18
BUNGALOW LAYOUT SIDES B, C, & D	19

peo-011.80-01.dgn
13-MAY-2016

SIEMENS INDUSTRY INC

DES.: BEH	DATE: 04/05/16	JOB NO.: PICA10767	
CKD.: BJW	ISSUE DATE: N/A	EST. NO.: XP-8133	
DRN.: BEH	PLAN NO.: N/A	SHEET 1 OF 19	
P TIME: 16:59	P DATE: 13-MAY-2016	CAD ID.: CTN-720.60-01	

SII 04 MAY 2016

TO BE CONFIRMED

CONFIRMED
DATE _____
BY _____
(PRINT NAME)

PROPOSED
DESIGN NO. 14-0053
RED-IN YELLOW-OUT

AS INSTALLED
DATE _____
BY _____
(PRINT NAME)

PROPOSED			REVISIONS	D	C	COMPLETED			C
D	M	Y				D	M	Y	

REGION SOUTHERN
SUB. PEORIA 362

SIGNALS AND COMMUNICATIONS HOMEWOOD
04 MAY 2016
DES. BEH
CH. BJW

INDEX, CABLE & TRACK LAYOUT

SOUTH PEKIN, IL
VFW RD

PEO-011.80-01

DOT#292 680C

SIEMENS INDUSTRY INC
LOUISVILLE DIVISION, LOUISVILLE, KY

REVISIONS				
NO.	DATE	BY	DESCRIPTION	APP. BY
1				
2				
3				
4				
5				

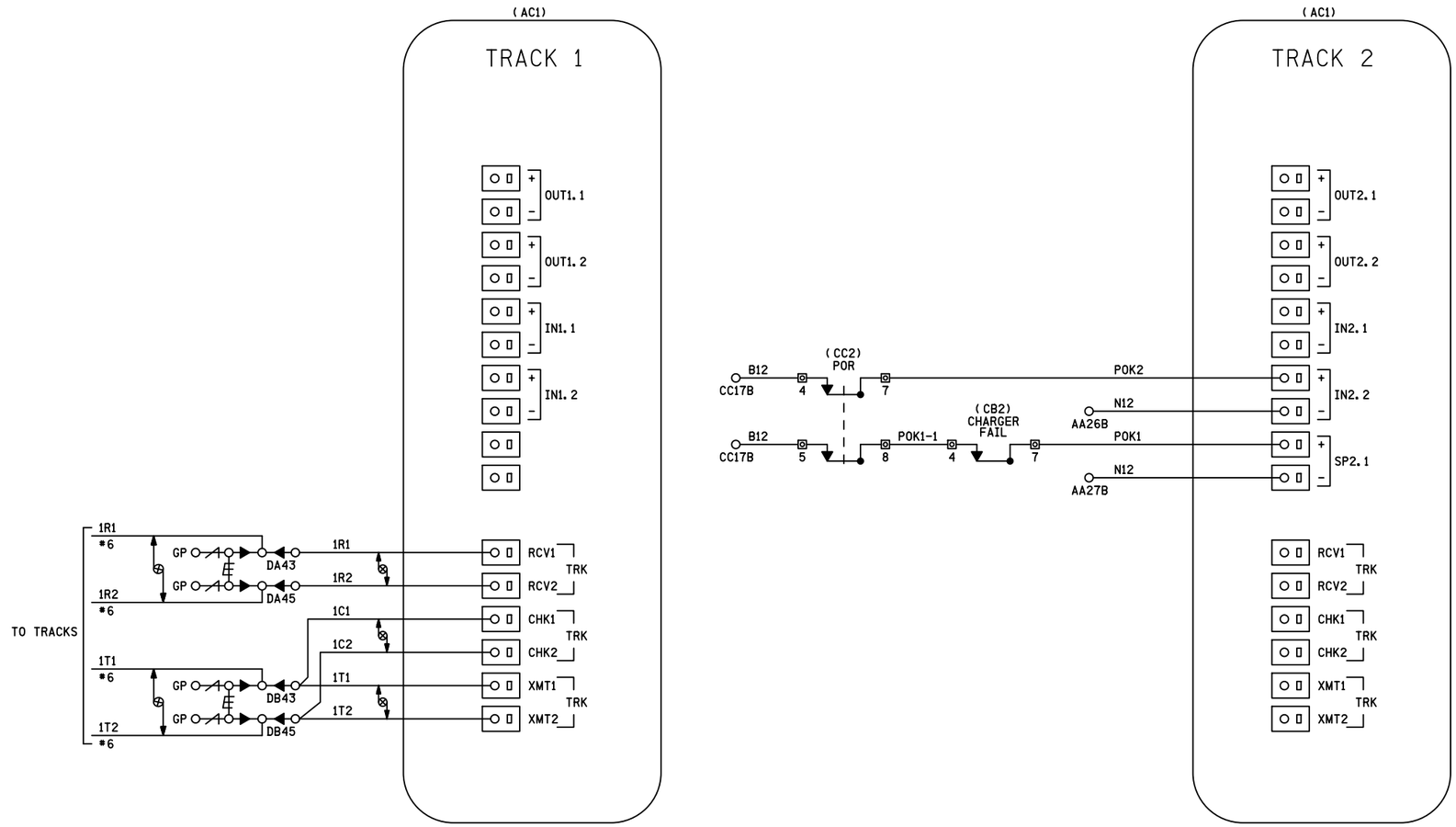

NOTES
1) ALL WIRING *16 AWG UNLESS OTHERWISE NOTED

-DENOTES TWISTED PAIR

GP L C R -DENOTES THRU TERMINAL

SIEMENS INDUSTRY INC			
DES.: BEH	DATE: 04/05/16	JOB NO.: PICA10767	
CKD.: BJW	ISSUE DATE: N/A	EST. NO.: XP-8133	
DRN.: BEH	PLAN NO.: N/A	SHEET 2 OF 19	
P TIME: 16:59	P DATE: 13-MAY-2016	CAD ID.: CTN-720.60-01	

SII 04 MAY 2016

PROPOSED
DESIGN NO. 14-0053
RED-IN YELLOW-OUT

AS INSTALLED
DATE _____
BY _____
(PRINT NAME)

PROPOSED D	M	Y	REVISIONS	D	C	COMPLETED D	M	Y	C

REGION SOUTHERN
SUB. PEORIA 362

SIGNALS AND COMMUNICATIONS HOMEWOOD
04 MAY 2016
DES. BEH
CH. BJW

GCP 4000 TRACK 1 & 2
MODULE CONNECTIONS
SOUTH PEKIN, IL
VFW RD

PEO-011.80-02

DOT#292 680C

SIEMENS INDUSTRY INC
LOUISVILLE DIVISION, LOUISVILLE, KY

peo-011.80-02.dgn
13-MAY-2016

REVISIONS				
NO.	DATE	BY	DESCRIPTION	APP. BY
1				
2				
3				
4				
5				

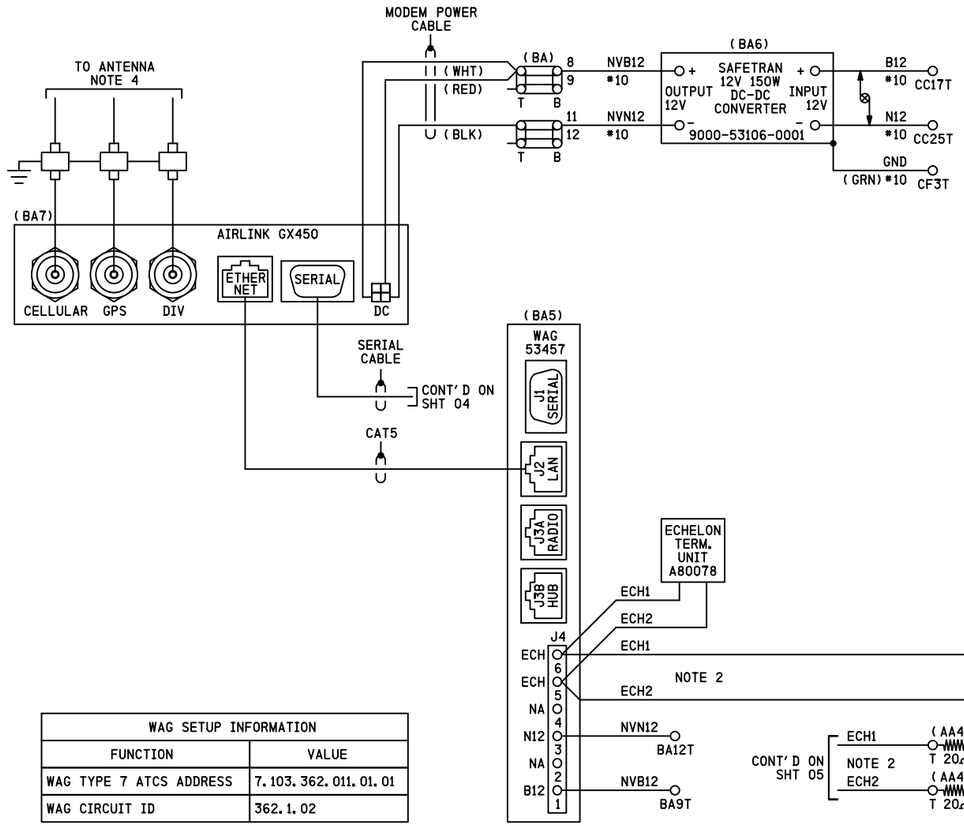

WAG SETUP INFORMATION	
FUNCTION	VALUE
WAG TYPE 7 ATCS ADDRESS	7.103.362.011.01.01
WAG CIRCUIT ID	362.1.02

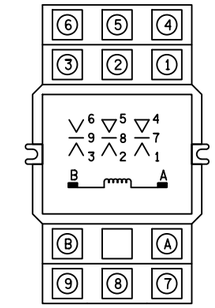

TRBR
RELAY DETAIL
RELAY - POTTER & BRUMFIELD
MODEL KUMP-14D18-12 SOCKET MOUNTABLE
12 VDC W/ 3 FORM C CONTACTS.
SOCKET - SCREW TERMINAL
MODEL 27E121
HOLD DOWN SPRING
MODEL 20C314

NOTES
1) ALL WIRING #16 AWG UNLESS OTHERWISE NOTED
2) USE BELDEN CABLE, PART # 8461-060U500 FOR ALL ECHELON AND LAN WIRING
3) ENSURE CONNECTIONS ARE SECURED IN PLACE BY SCREW LOCKING MECHANISM
4) ANTENNA, CABLE, AND POLYPHASERS TO BE INSTALLED PER RFAIG

-DENOTES TWISTED PAIR

SII 04 MAY 2016

PROPOSED
DESIGN NO. 14-0053
RED-IN YELLOW-OUT

AS INSTALLED
DATE _____
BY _____
(PRINT NAME)

PROPOSED			REVISIONS	D	C	COMPLETED			C
D	M	Y				D	M	Y	

REGION SOUTHERN
SUB. PEORIA 362

SIGNALS AND COMMUNICATIONS HOMEWOOD
04 MAY 2016
DES. BEH
CH. BJW

GCP 4000 CPUII+
SOUTH PEKIN, IL
VFW RD

PEO-011.80-03

DOT#292 680C

SIEMENS INDUSTRY INC

DES.: BEH	DATE: 04/05/16	JOB NO.: PICA10767	
CKD.: BJW	ISSUE DATE: N/A	EST. NO.: XP-8133	
DRN.: BEH	PLAN NO.: N/A	SHEET 3 OF 19	
P TIME: 16:59	P DATE: 13-MAY-2016	CAD ID.: CTN-720.60-01	

SIEMENS INDUSTRY INC
LOUISVILLE DIVISION, LOUISVILLE, KY

peo-011.80-03.dgn
13-MAY-2016

REVISIONS				
NO.	DATE	BY	DESCRIPTION	APP. BY
1				
2				
3				
4				
5				

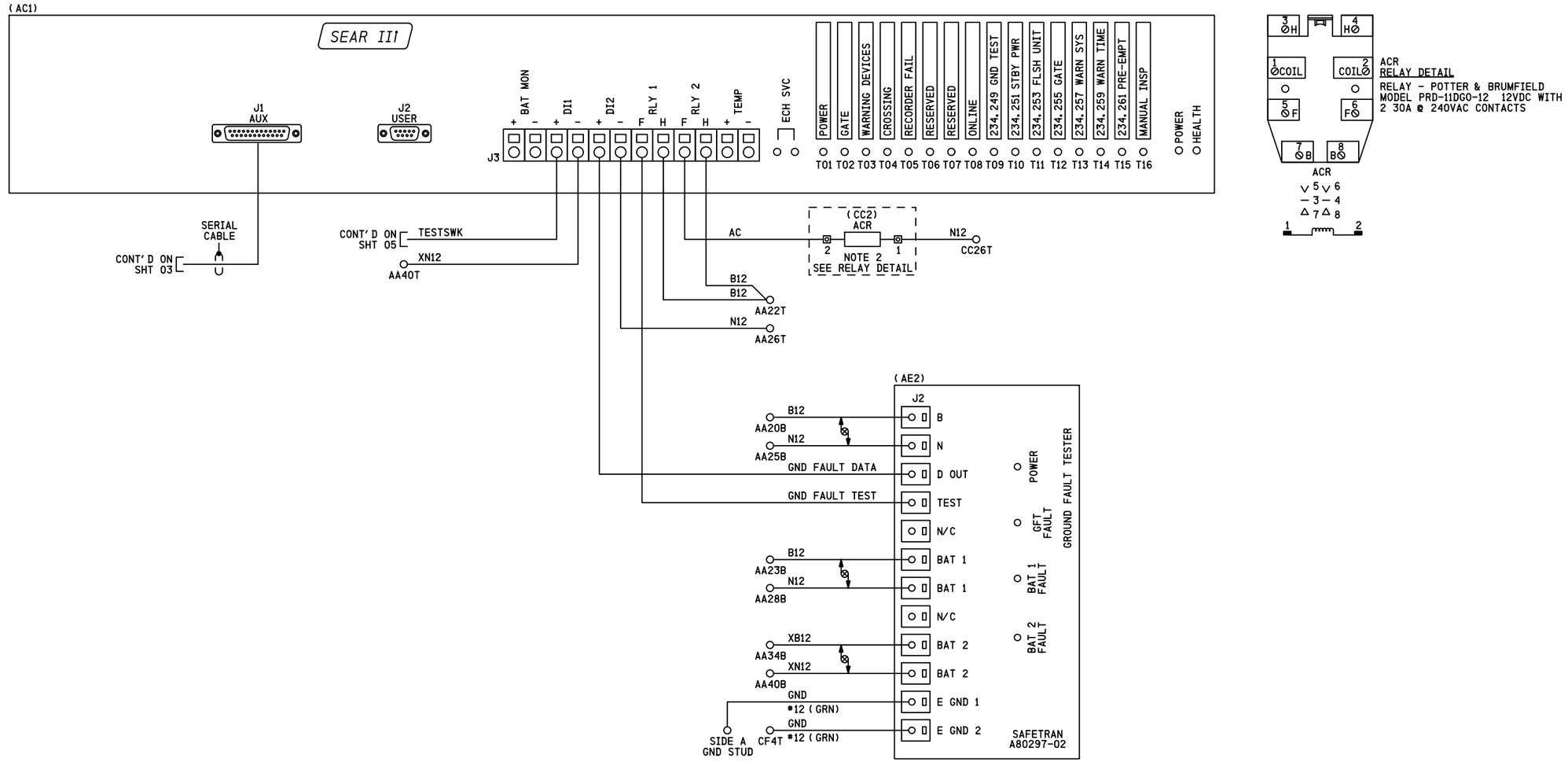

peo-011.80-04.dgn
13-MAY-2016

SIEMENS INDUSTRY INC	
DES.: BEH	DATE: 04/05/16
CKD.: BJW	ISSUE DATE: N/A
DRN.: BEH	PLAN NO.: N/A
P TIME: 16:59	P DATE: 13-MAY-2016
JOB NO.: PICA10767	
EST. NO.: XP-8133	
SHEET 4 OF 19	
CAD ID.: CTN-720.60-01	

NOTES
1) ALL WIRING #16 AWG UNLESS OTHERWISE NOTED
2) PART OF SEARIII POWER CONTROL AND INDICATION RELAY JUNCTION BOX

-DENOTES TWISTED PAIR

SIEMENS INDUSTRY INC
LOUISVILLE DIVISION, LOUISVILLE, KY

SII 04 MAY 2016

PROPOSED
DESIGN NO. 14-0053
RED-IN YELLOW-OUT

AS INSTALLED
DATE _____
BY _____
(PRINT NAME)

PROPOSED			REVISIONS	D	C	COMPLETED			C
D	M	Y				D	M	Y	

REGION SOUTHERN
SUB. PEORIA 362

SIGNALS AND COMMUNICATIONS HOMEWOOD
04 MAY 2016
DES. BEH
CH. BJW

GCP 4000 SEAR III & GFT

SOUTH PEKIN, IL
VFW RD

PEO-011.80-04

DOT#292 680C

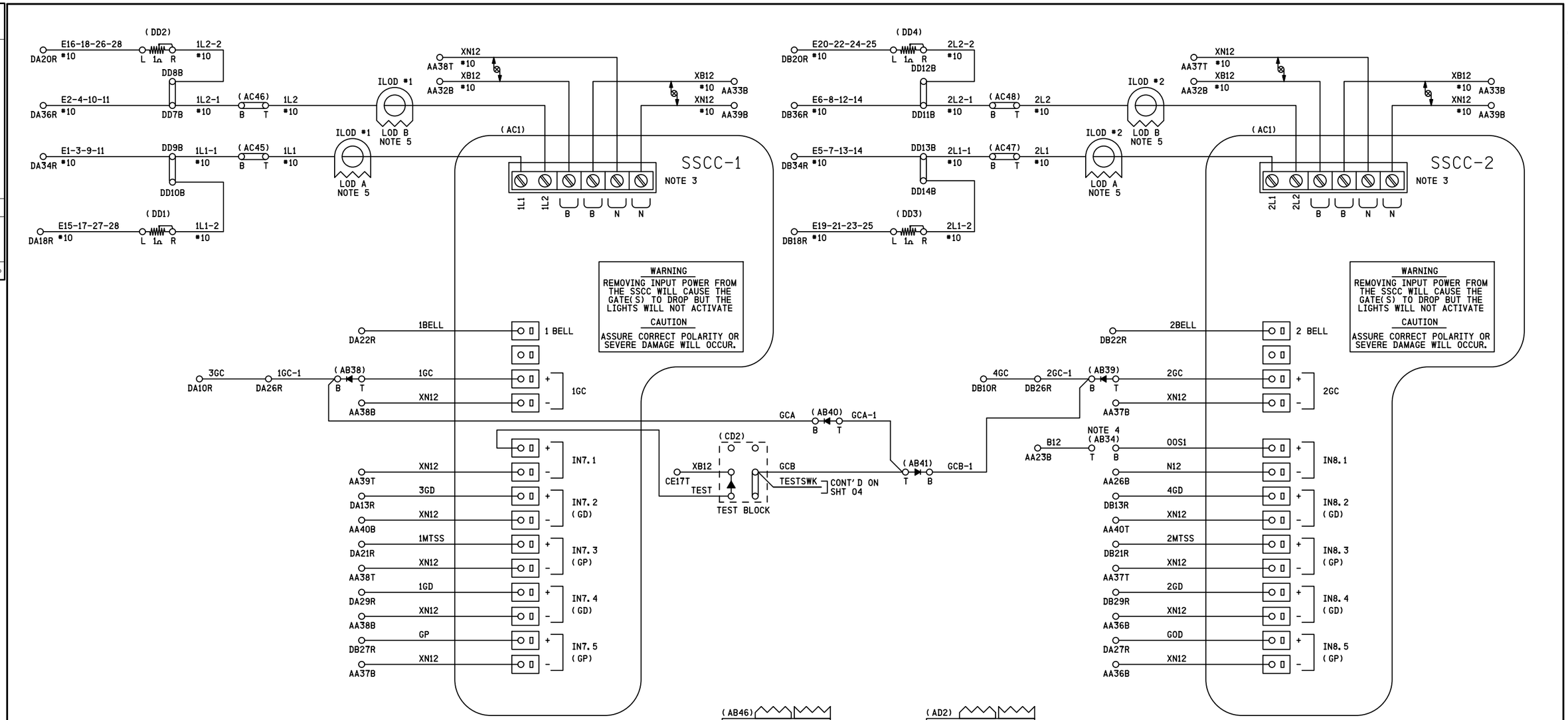

NOTES

1) ALL WIRING TO BE #16 AWG UNLESS OTHERWISE NOTED
2) USE BELDEN CABLE, PART # 8461-060U500 FOR ALL ECHELON AND LAN WIRING
3) ENSURE CONNECTIONS ARE SECURED IN PLACE BY SCREW LOCKING MECHANISM
4) TO TAKE TRACK 1 (T1) OUT OF SERVICE, JUMPER AB34T TO AB34B
5) LOOP WIRE THROUGH LOD TWO (2) TIMES

-DENOTES RECTIFIER, SAFETRAN PART # 8002A299006

-DENOTES TWISTED PAIR

REVISIONS				
NO.	DATE	BY	DESCRIPTION	APP. BY
1				
2				
3				
4				
5				

SIEMENS INDUSTRY INC

DES.: BEH	DATE: 04/05/16	JOB NO.: PICA10767	
CKD.: BJW	ISSUE DATE: N/A	EST. NO.: XP-8133	
DRN.: BEH	PLAN NO.: N/A	SHEET 5 OF 19	
P. TIME: 16:59	P. DATE: 13-MAY-2016	CAD ID.: CTN-720.60-01	

SIII 04 MAY 2016

PROPOSED
DESIGN NO. 14-0053
RED-IN YELLOW-OUT

AS INSTALLED
DATE
BY
(PRINT NAME)

PROPOSED D	M	Y	REVISIONS	D	C	COMPLETED D	M	Y	C

REGION SOUTHERN
SUB. PEORIA 362

SIGNALS AND COMMUNICATIONS HOMEWOOD
04 MAY 2016
DES. BEH
CH. BJW

GCP 4000 SSCCIIII GATE CONTROLLERS & ILODS
SOUTH PEKIN, IL
VFW RD

PEO-011.80-05

DOT#292 680C

SIEMENS INDUSTRY INC
LOUISVILLE DIVISION, LOUISVILLE, KY

peo-011.80-05.dgn
13-MAY-2016

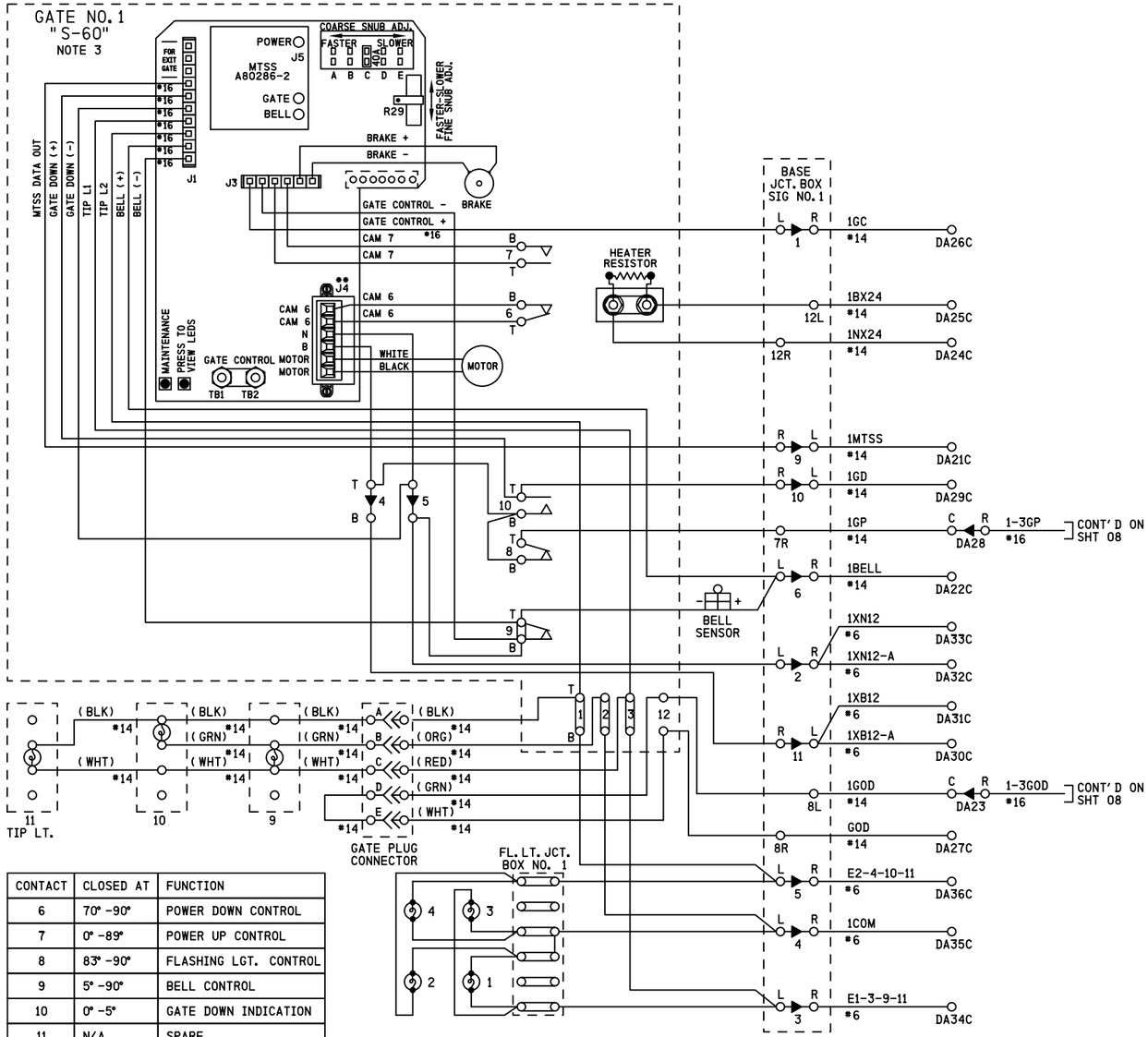

CONTACT	CLOSED AT	FUNCTION
6	70° -90°	POWER DOWN CONTROL
7	0° -89°	POWER UP CONTROL
8	83° -90°	FLASHING LGT. CONTROL
9	5° -90°	BELL CONTROL
10	0° -5°	GATE DOWN INDICATION
11	N/A	SPARE
12	N/A	SPARE

BASE JCT. SIG NO. 1
TERMINAL NUMBERING

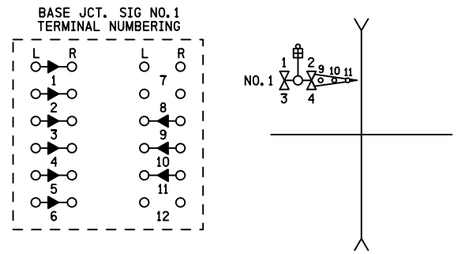

NOTES
1) ON GATE NO. 1:
ADD JUMPER BETWEEN TERMINAL 4T & 10B,
ADD JUMPER BETWEEN TERMINAL 8B & 10B,
ADD JUMPER BETWEEN TERMINAL 5B & 9B
2) ALL WIRING #10 AWG UNLESS OTHERWISE NOTED
3) GATE DESCENT TIME (RELEASE FROM VERTICAL TO FULLY HORIZONTAL) TO BE WITHIN 11 SECONDS
4) ENSURE ALL TERMINALS HAVE TWO SHOULDER NUTS

SII 04 MAY 2016

PROPOSED
DESIGN NO. 14-0053
RED-IN YELLOW-OUT

AS INSTALLED
DATE
BY
(PRINT NAME)

PROPOSED D	M	Y	REVISIONS	D	C	COMPLETED D	M	Y	C

REGION SOUTHERN
SUB. PEORIA 362

SIGNALS AND COMMUNICATIONS HOMEWOOD
04 MAY 2016
DES. BEH
CH. BJW

GATE 1 MECH. CONTROL CIRCUITS
SAFETRAN S-60
SOUTH PEKIN, IL
VFW RD

PEO-011.80-06

DOT#292 680C

SIEMENS INDUSTRY INC
LOUISVILLE DIVISION, LOUISVILLE, KY

SIEMENS INDUSTRY INC
DES.: BEH | DATE: 04/05/16 | JOB NO.: PICA10767
CKD.: BJW | ISSUE DATE: N/A | EST. NO.: XP-8133
DRN.: BEH | PLAN NO.: N/A | SHEET 6 OF 19
P TIME: 16:59 | P DATE: 13-MAY-2016 | CAD ID.: CTN-720.60-01

NO.	DATE	BY	DESCRIPTION	APP. BY
1				
2				
3				
4				
5				

REVISIONS

peo-011.80-06.dgn
13-MAY-2016

REVISIONS				
NO.	DATE	BY	DESCRIPTION	APP. BY
1				
2				
3				
4				
5				

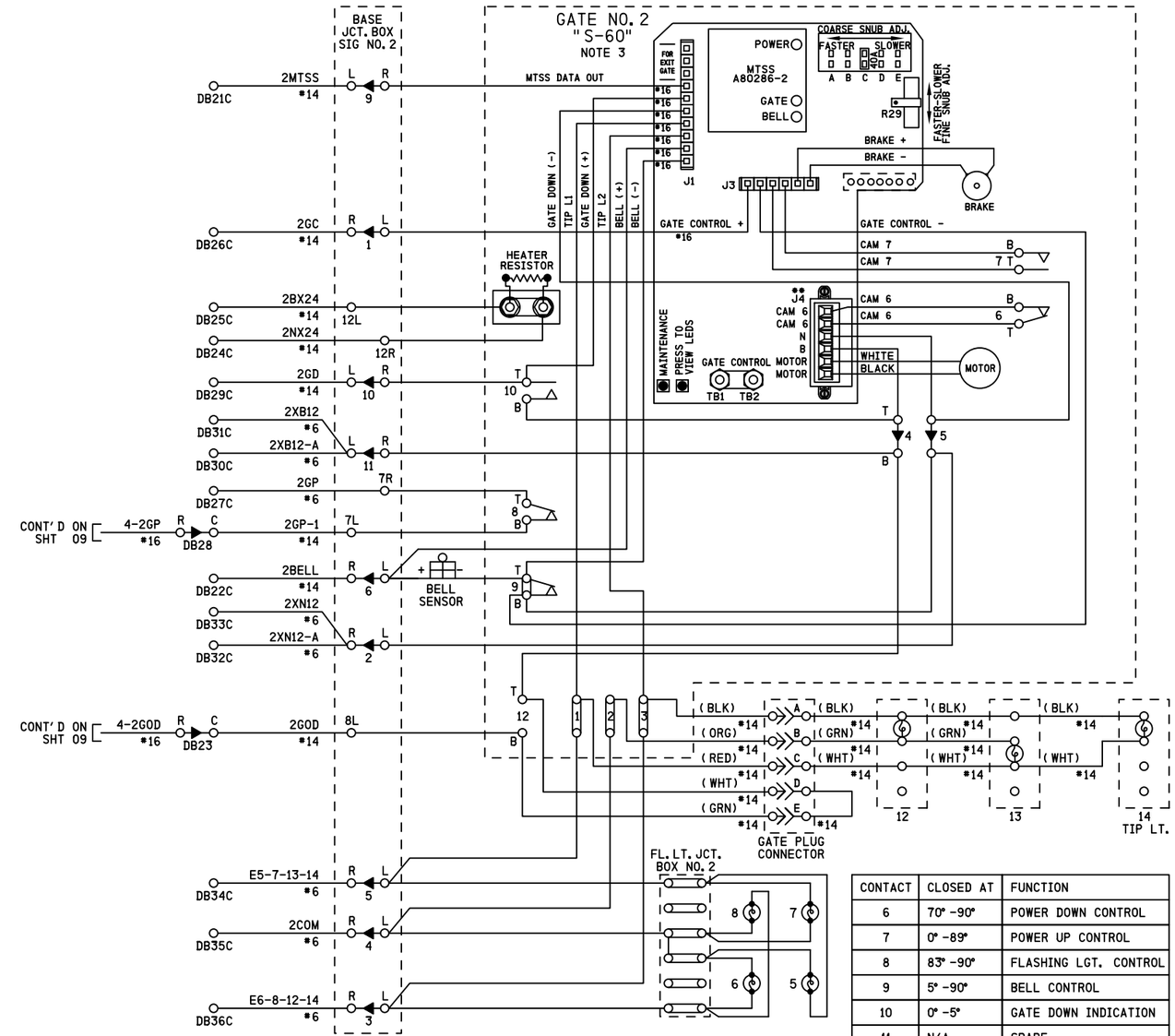

CONTACT	CLOSED AT	FUNCTION
6	70° -90°	POWER DOWN CONTROL
7	0° -89°	POWER UP CONTROL
8	83° -90°	FLASHING LGT. CONTROL
9	5° -90°	BELL CONTROL
10	0° -5°	GATE DOWN INDICATION
11	N/A	SPARE
12	N/A	SPARE

BASE JCT. SIG NO. 2 TERMINAL NUMBERING

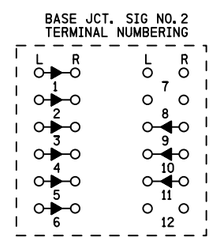

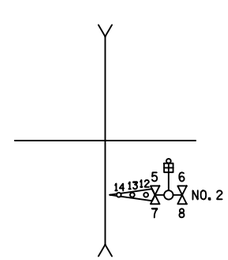

NOTES

1) ON GATE NO. 2:
   ADD JUMPER BETWEEN TERMINAL 4T & 10B,
   ADD JUMPER BETWEEN TERMINAL 5B & 9B,
   ADD JUMPER BETWEEN TERMINAL 4B & 12T
2) ALL WIRING #10 AWG UNLESS OTHERWISE NOTED
3) GATE DESCENT TIME (RELEASE FROM VERTICAL TO FULLY HORIZONTAL) TO BE WITHIN 11 SECONDS
4) ENSURE ALL TERMINALS HAVE TWO SHOULDER NUTS

SII 04 MAY 2016

PROPOSED
DESIGN NO. 14-0053
RED-IN YELLOW-OUT

AS INSTALLED
DATE
BY
(PRINT NAME)

PROPOSED D	M	Y	REVISIONS	D	C	COMPLETED D	M	Y	C

REGION SOUTHERN
SUB. PEORIA 362

SIGNALS AND COMMUNICATIONS HOMEWOOD
04 MAY 2016
DES. BEH
CH. BJW

GATE 2 MECH. CONTROL CIRCUITS
SAFTERAN S-60
SOUTH PEKIN, IL
VFW RD

PEO-011.80-07

DOT#292 680C

SIEMENS INDUSTRY INC

DES.: BEH	DATE: 04/05/16	JOB NO.: PICA10767	
CKD.: BJW	ISSUE DATE: N/A	EST. NO.: XP-8133	
DRN.: BEH	PLAN NO.: N/A	SHEET 9 OF 19	
P TIME: 16:59	P DATE: 13-MAY-2016	CAD ID.: CTN-720.60-01	

SIEMENS INDUSTRY INC
LOUISVILLE DIVISION, LOUISVILLE, KY

peo-011.80-07.dgn
13-MAY-2016

REVISIONS				
NO.	DATE	BY	DESCRIPTION	APP. BY
1				
2				
3				
4				
5				

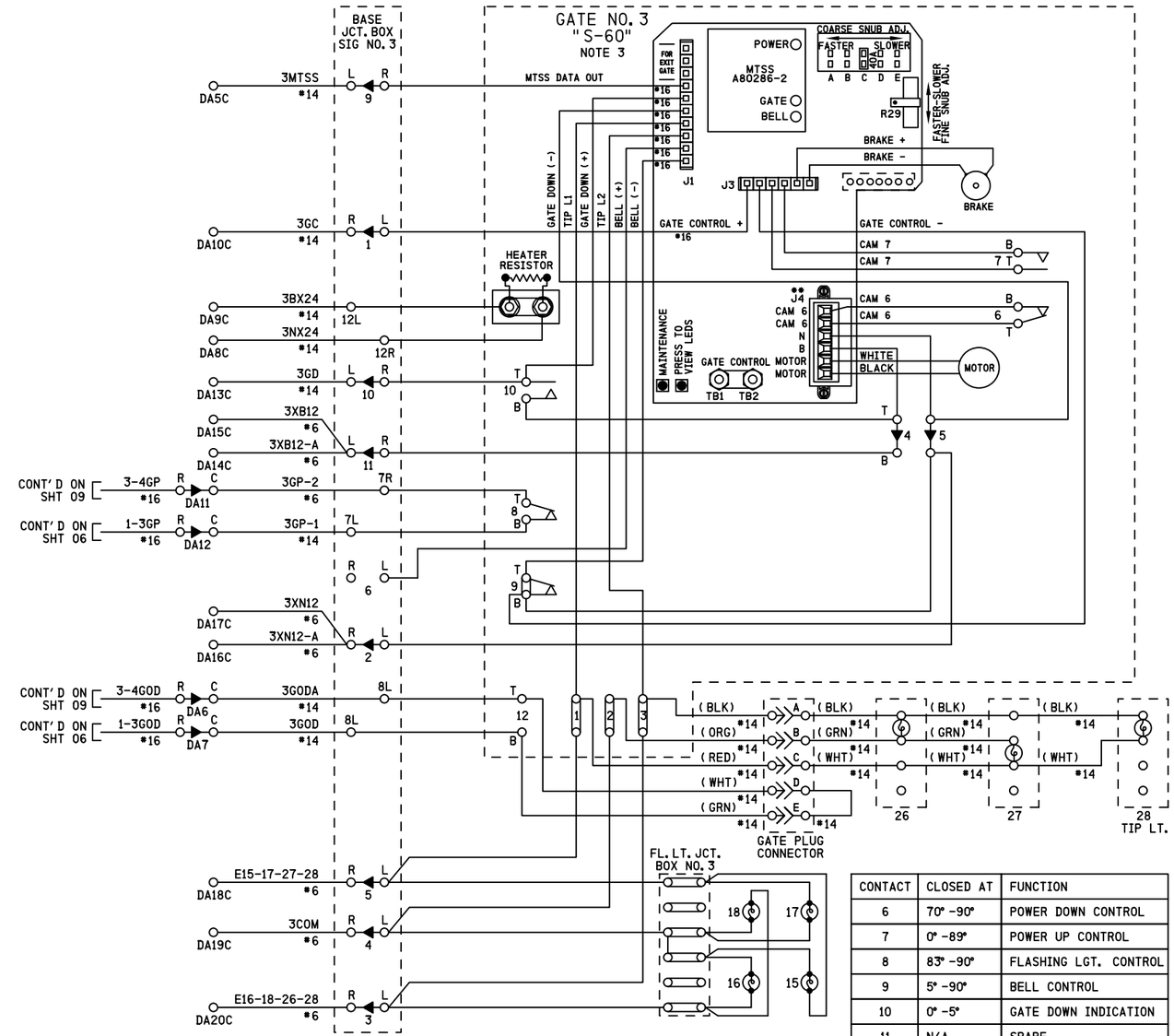

CONTACT	CLOSED AT	FUNCTION
6	70° -90°	POWER DOWN CONTROL
7	0° -89°	POWER UP CONTROL
8	83° -90°	FLASHING LGT. CONTROL
9	5° -90°	BELL CONTROL
10	0° -5°	GATE DOWN INDICATION
11	N/A	SPARE
12	N/A	SPARE

BASE JCT. SIG NO. 3 TERMINAL NUMBERING

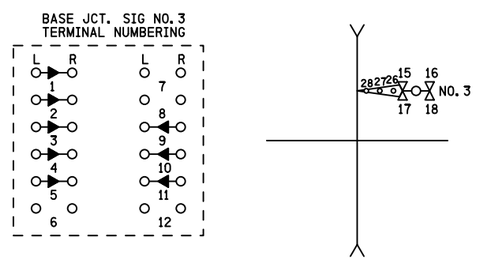

NOTES

1) ON GATE NO. 2:
   ADD JUMPER BETWEEN TERMINAL 4T & 10B,
   ADD JUMPER BETWEEN TERMINAL 5B & 9B
2) ALL WIRING #10 AWG UNLESS OTHERWISE NOTED
3) GATE DESCENT TIME (RELEASE FROM VERTICAL TO FULLY HORIZONTAL) TO BE WITHIN 11 SECONDS
4) ENSURE ALL TERMINALS HAVE TWO SHOULDER NUTS

SII 04 MAY 2016

PROPOSED
DESIGN NO. 14-0053
RED-IN YELLOW-OUT

AS INSTALLED
DATE _____
BY _____
(PRINT NAME)

PROPOSED D	M	Y	REVISIONS	D	C	COMPLETED D	M	Y	C

REGION SOUTHERN
SUB. PEORIA 362

SIGNALS AND COMMUNICATIONS HOMEWOOD
04 MAY 2016
DES. BEH
CH. BJW

GATE 3 MECH. CONTROL CIRCUITS
SAFTERAN S-60
SOUTH PEKIN, IL
VFW RD

PEO-011.80-08

DOT#292 680C

SIEMENS INDUSTRY INC

DES.: BEH	DATE: 04/05/16	JOB NO.: PICA10767	
CKD.: BJW	ISSUE DATE: N/A	EST. NO.: XP-8133	
DRN.: BEH	PLAN NO.: N/A	SHEET 7 OF 19	
P TIME: 16:59	P DATE: 13-MAY-2016	CAD ID.: CTN-720.60-01	

SIEMENS INDUSTRY INC
LOUISVILLE DIVISION, LOUISVILLE, KY

peo-011.80-08.dgn
13-MAY-2016