PRIME WARNING TIME = 27 SECONDS

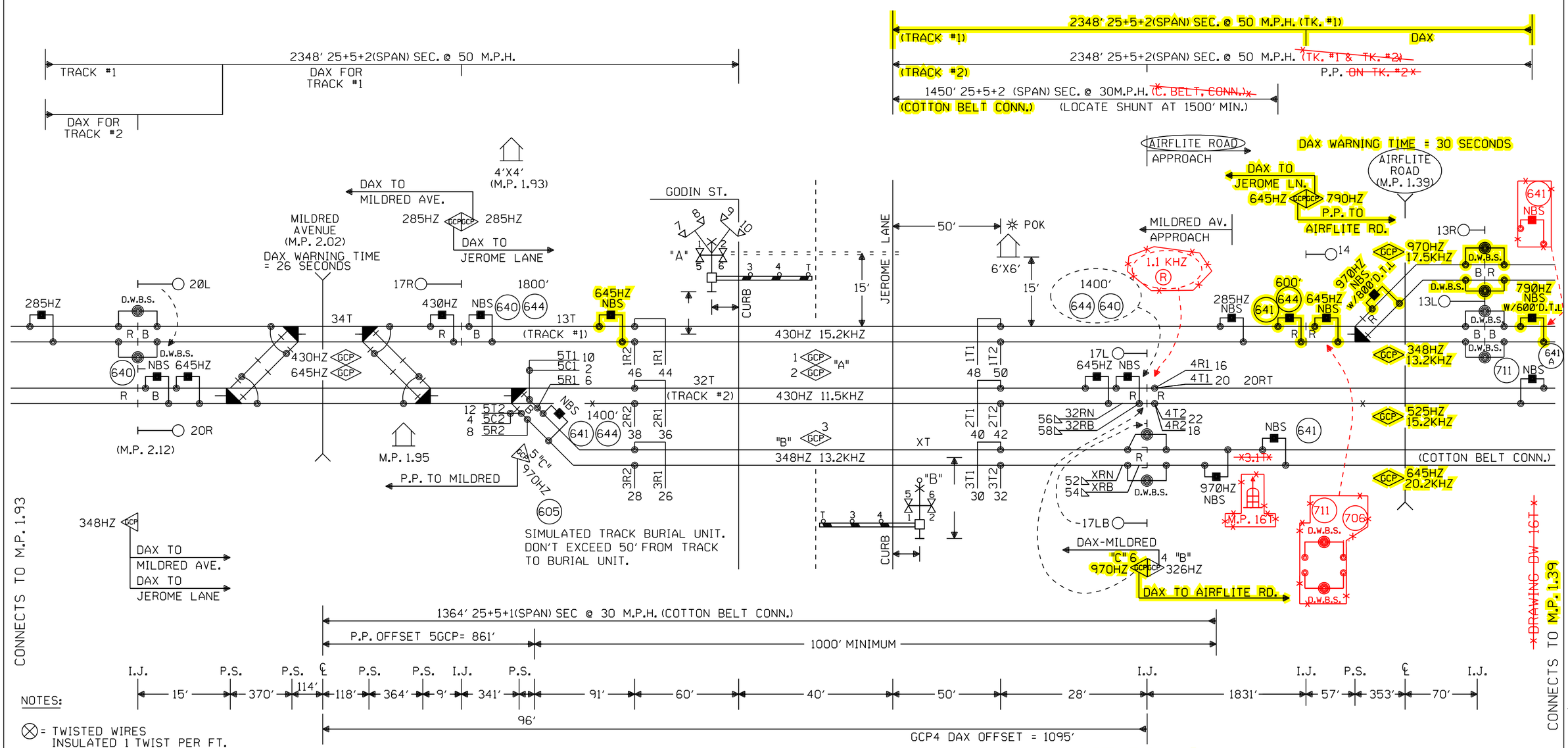

NOTES:

⊗ = TWISTED WIRES
INSULATED 1 TWIST PER FT.
ALL TRACK WIRES 2C. #6

TRANSMITTER AND RECEIVER LEADS TO BE SEPARATED BY AT LEAST 12" IN TRENCH, LENGTHS SHOULD NOT EXCEED MANUFACTURES RECOMMENDATION.

TOP OF FOUNDATION TO BE AT SAME ELEVATION AS THE SURFACE OF THE TRAVELED WAY & NO MORE THAN 4" ABOVE THE SURFACE OF THE GROUND.

ALL BUNGALOW WIRING TO BE #16 AWG FLEX UNLESS OTHERWISE SPECIFIED EXCEPT ALL GROUND WIRE TO BE #6 AWG FLEX OR LARGER.

ALL WIRING IN GATE MECHANISM TO BE #10 "AWG FLEX".

REFER TO UP STANDARD DWG FOR BUNGALOW GROUNDING.

DO NOT USE 7 CELLS OF B12 BATTERY UNLESS REQUIRED TO MAINTAIN MINIMUM LAMP VOLTAGE.

ALL LIGHTS TO BE 12" ROUNDELS.

= = = = = = 4" X 50' CONDUIT

LIGHTS: ALL LED

GATE A: 24'
GATE B: 24'

ENSURE TRACK POLARITY IS TRANSPOSED ACROSS ALL INSULATED JOINTS.

NOTE:
TIE THE TRANSMIT AND CHECK TRACK WIRES TOGETHER AT OR NEAR THE BOOTLEG CONNECTION AND THEN RUN A SINGLE WIRE TO THE RAILS

CABLE TABULATION

CABLE NO.6	7C.NO.14 U.G.B.T. HOUSE TO REMOTE XING MP 1.93
CABLE NO.7	7C.NO.14 U.G.B.T. HOUSE TO CP D002 MP 1.95
~~CABLE NO.8~~	~~7C.NO.14 U.G.B.T. CP D001 TO CP D002 M.P. 1.95~~
CABLE NO.9	7C.NO.14 U.G.B.T. HOUSE TO MP 1.39

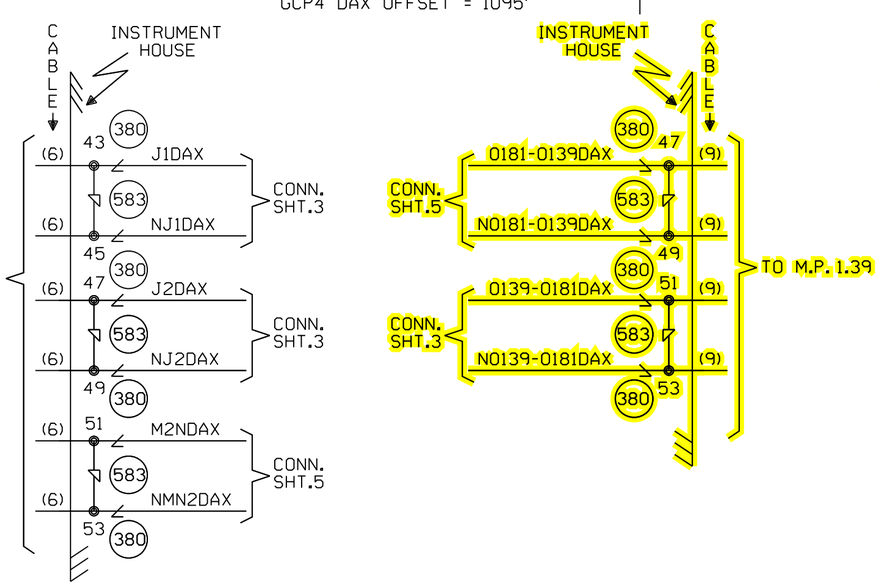

CONSTRUCTION NOTES:

1.) ORDER AND INSTALL IN "C" GCP
(2) - PART NO. 80012
(2) - PART NO. 80016

= IN
= OUT
= EXISTING, REVISE IF AC'D

S ← → N

CAHOKIA, ILLINOIS
JEROME LANE
CHESTER SUBDIVISION
D.O.T.#424757F

Designed: 1/5/16 INSTALL NEW CABIN, GATES, AND FLASHERS AIRFLITE ROAD M.P.1.40 Rec#: WO#: 31926 IS: ÆJH / ATG/JVJ	Revised: 08-03-15 ADDED "C" GCP 3000 AND UPDATED FOOTAGES PER FIELD AC. PID: N/A WO#: N/A IS: 07-31-15 / Rec#:23039 ACF/WIT /	Revised: 05/28/14 UPDATED FREQUENCY AT MILDRED AVENUE M.P. 2.02 PER FIELD AC. Rec#: 20372 WO#: IS: 05/22/14 / DLR/NST /	Revised: 12/07/12 REMOVE CAMP JACKSON ROAD CROSSING PER FIELD AC Rec#: 18871 WO#: IS: 07/27/12 / MJD/XRL /	Revised: 12-10-10 UPDATED FREQUENCY FOR MILDRED AVE. AT M.P. 2.02 AND INSTALLED CRTU PER FIELD AC. Rec#: 17312 WO#: N/A IS: 11-29-10 / MJD/WIT /	REV. 10-27-00 INSTALLED CONSTANT WARNING ON JEROME LANE. I.S. 8-29-00 JJF/JNM TG/WITT/SSS/JNM	MODIFICATION LEVEL		CIRCUIT MODIFICATIONS ARE NOT TO BE MADE WITHOUT AUTHORITY FROM THE OFFICE OF SIGNAL DESIGN	DES: SAB/SSS DIG: SAB/SSS CHK: RCP/JJF A.F.E. 27553 ID= 127500181.1	UNION PACIFIC RAILROAD VALLEY JCT., ILLINOIS TO CHARLESTON JCT., MISSOURI C.T.C. CIRCUITS Office of AVP Engineering - Signal OMAHA NEBR.	DATE 1-29-99 SHEET 1 DWG 1.81 S-1275
						Q.A. LAST LEVEL CHK'D.	CF				
						LAST LEVEL MOD. THIS TYP.	CE				
						LAST LEVEL BY DESIGNER.	CO				
						CHANGED FROM TYP.? Y/N	Y				

(REV. (12-2-97) (1TKBG.1)

127500181.1 2/29/2016 10:58:50 AM

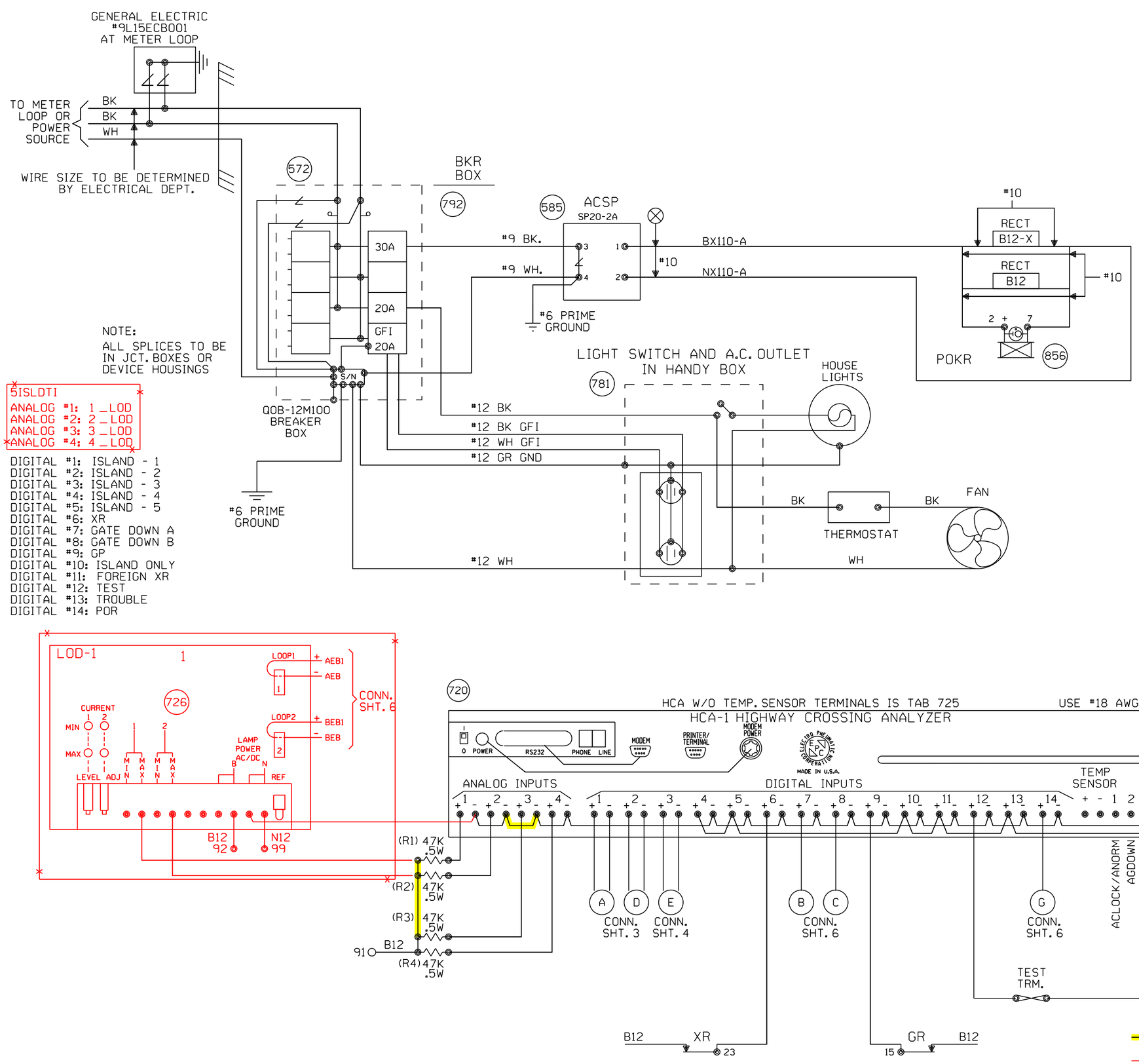

NOTE:
ALL SPLICES TO BE IN JCT. BOXES OR DEVICE HOUSINGS

5ISLDTI
ANALOG #1: 1 _LOD
ANALOG #2: 2 _LOD
ANALOG #3: 3 _LOD
ANALOG #4: 4 _LOD

DIGITAL #1: ISLAND - 1
DIGITAL #2: ISLAND - 2
DIGITAL #3: ISLAND - 3
DIGITAL #4: ISLAND - 4
DIGITAL #5: ISLAND - 5
DIGITAL #6: XR
DIGITAL #7: GATE DOWN A
DIGITAL #8: GATE DOWN B
DIGITAL #9: GP
DIGITAL #10: ISLAND ONLY
DIGITAL #11: FOREIGN XR
DIGITAL #12: TEST
DIGITAL #13: TROUBLE
DIGITAL #14: POR

LOD NOTES:
1. THE POWER FOR AN LOD MUST BE WIRED TO THE SAME SOURCE AS THE LIGHTS THEY ARE MONITORING.
2. ONE REFERENCE VOLTAGE PER LOD PER HCA ANALOG INPUT.
3. TWO LOD'S OR FOUR LOD OUTPUTS PER HCA ANALOG INPUT.
4. ONE LOD OUTPUT PER FOUR ANALOG INPUTS.
5. A RESISTOR MUST ALWAYS BE INSTALLED IN SERIES BETWEEN THE LOD OUTPUTS AND THE HCA ANALOG INPUTS.
6. THE NUMBER OF UNIQUE REFERENCE VOLTAGES IS DETERMINED BY THE NUMBER OF UNIQUE BATTERY BANKS AND/OR LIGHTING TRANSFORMERS.

HCA NOTES:
1. CPU BOARD REV LEVEL "F" OR HIGHER.
2. SOFTWARE REV LEVEL "UP1-NC" OR GREATER ON IC13.
3. DIP SWITCH #1: ON, ON, ON, OFF, ON, ON, OFF, OFF.
4. DIP SWITCH #2: OFF, OFF, OFF, OFF, OFF, OFF, OFF, OFF.
5. JUMPER ALL UNUSED DIGITAL "+" INPUTS TO THE B TERMINAL.
6. JUMPER ALL UNUSED DIGITAL "-" INPUTS TO THE N TERMINAL.
7. THE ANALOG AND DIGITAL INPUT ASSIGNMENT MUST BE MARKED ON THE HCA SHEET.
8. DO NOT JUMPER INPUTS WITH DIFFERENT VOLTAGE REFERENCES TOGETHER.
9 REFER TO "FIELD INSTRUCTIONS FOR INSTALLATION AND OPERATION OF HIGHWAY CROSSING ANALYZERS" FOR EQUIPMENT SETUP.

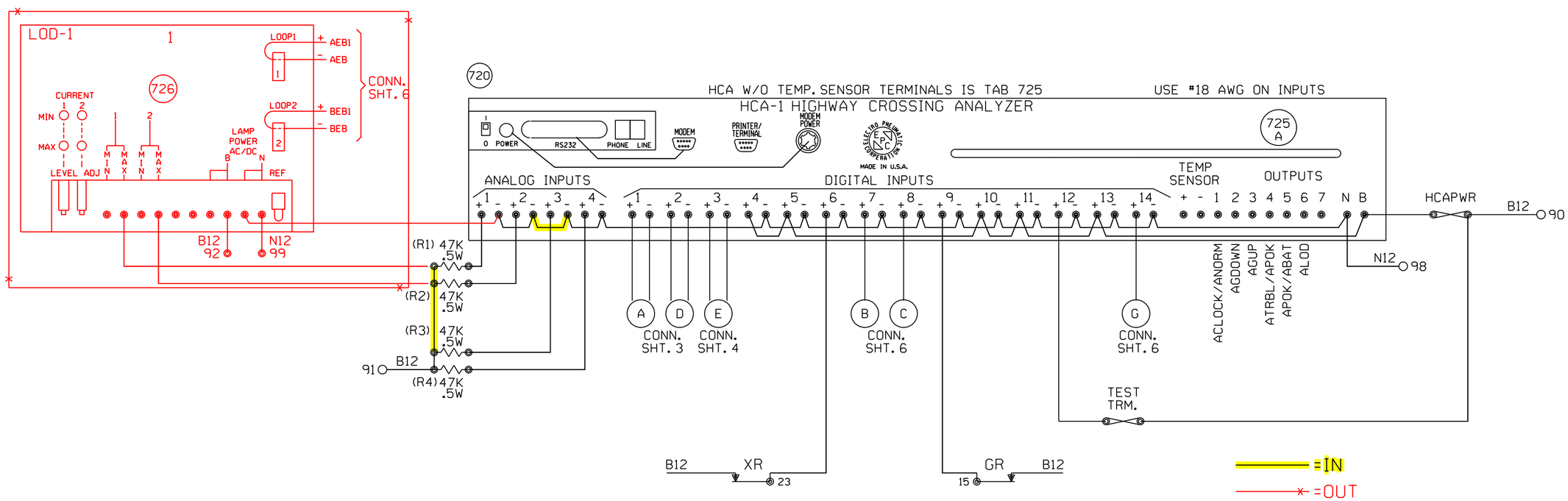

CAHOKIA, ILLINOIS
JEROME LANE
CHESTER SUBDIVISION
D.O.T.#424 757 F

Designed: 1/5/16 INSTALL NEW CABIN, GATES, AND FLASHERS AIRFLITE ROAD M.P.1.40 Rec#: WO#: 31926 IS: ÆJH / /ATG/JVJ	Revised: 08-03-15 ADDED "C" GCP 3000 PER FIELD AC. PID: N/A WO#: N/A IS: 07-31-15 / Rec#:23039 ACF/WIT / /	Revised: 12/07/12 REMOVE CAMP JACKSON ROAD CROSSING PER FIELD AC Rec#: 18871 WO#: IS: 07/27/12 / MJD/XRL / /	Revised: 12-10-10 UPDATED FREQUENCY FOR MILDRED AVE. AT M.P. 2.02 AND INSTALLED CRTU PER FIELD AC. Rec#: 17312 WO#: N/A IS: 11-29-10 / MJD/WIT / /	REV. 10-27-00 INSTALLED CONSTANT WARNING ON JEROME LANE. I.S. 8-29-00 JJF/JNM TG/WITT/SSS/JNM	MODIFICATION LEVEL		CIRCUIT MODIFICATIONS ARE NOT TO BE MADE WITHOUT AUTHORITY FROM THE OFFICE OF SIGNAL DESIGN
					Q.A. LAST LEVEL CHK'D.	CI	
					LAST LEVEL MOD. THIS TYP.	CK	
					LAST LEVEL BY DESIGNER.	CO	
					CHANGED FROM TYP.? Y/N	Y	

DES: SSS	UNION PACIFIC RAILROAD VALLEY JCT., ILLINOIS TO CHARLESTON JCT., MISSOURI C.T.C. CIRCUITS	DATE 1-29-99	
DIG: SSS		SHEET 2	
CHK: JJF		DWG 1.81	
A.F.E. 27553		S-1275	
ID= 127500181.2	Office of AVP Engineering - Signal OMAHA NEBR.		

(REV. 6-1-98) (HCA2TKGC.2)

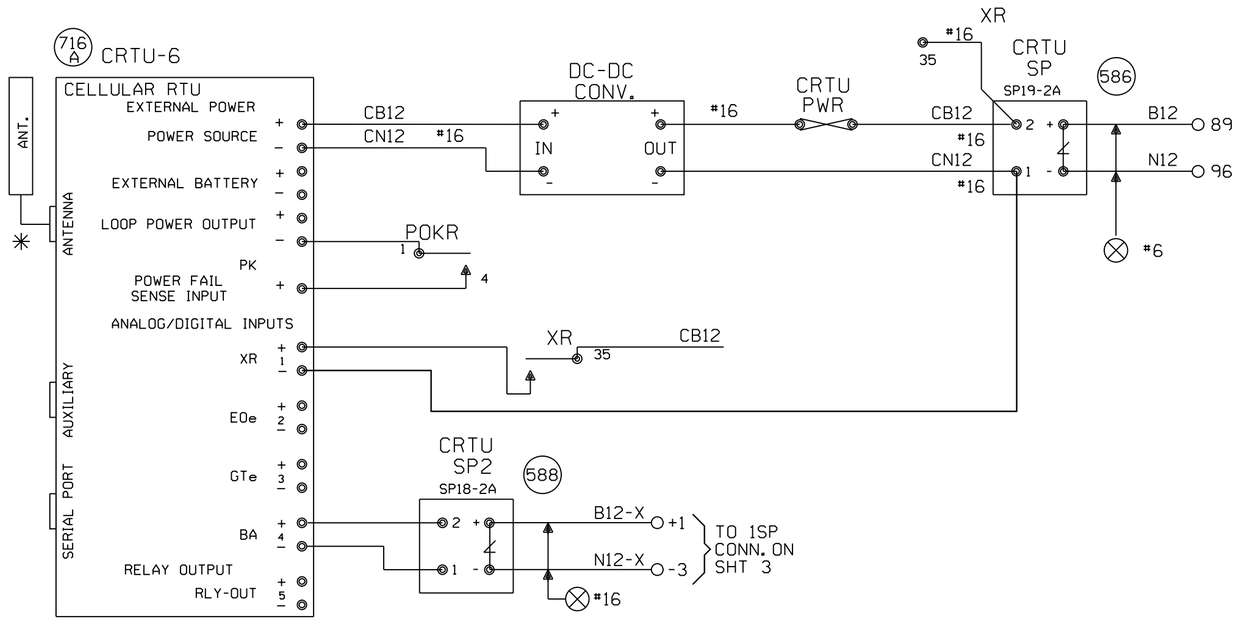

MOUNT CRTU AT LEAST 18" AWAY FROM HIGH VOLTAGE POWER SOURCES

NOTES:

ALL DIODES 1N5060 OR 1N4004 UNLESS OTHERWISE NOTED.
✳ MOUNT ANTENNA ON TOP OF HOUSE.
ALL WIRES #18 UNLESS OTHERWISE NOTED.
ALL UNUSED 'NC' INPUTS MUST BE TIED HIGH TO BATTERY
ALL UNUSED ANALOG INPUTS MUST BE TIED HIGH TO BATTERY
ALL UNUSED 'NO' INPUTS MUST BE DISCONNECTED
NORMAL STATE FOR ANALOG CHANNELS IS EQUAL TO THE STORED NOMINAL VOLTAGE +120% OR -81%
CRTU FRONT PANEL DISPLAY CHART INDICATES NORMAL STATE

■ DIGITAL INPUT HIGH, OR POWER FAIL INPUT CLOSED
□ DIGITAL INPUT LOW, OR POWER FAIL INPUT OPEN

□ L ← LATCH IS SET BECAUSE CRTU DETECTED AN ALARM CONDITION
12.06V L ←

'sRUN MODE' 'sRUN MODE-SILENT'
CRTU RADIO IS DISABLED. REPROGRAM CRTU WITH LAPTOP.

ANALOG AND AC INPUT MODULES MUST BE MOUNTED LESS THAN 12" FROM CRTU

UNIT INSTALLATION AND SETUP

R.R. SITE ID WHERE; SSSS = 4 CHARACTER SUBDIVISION ID. FILL WITH PRECEDING ZEROS AS REQUIRED. THE MAIN TRACK SUBDIVISION ID# IS IN THE CURRENT TIMETABLE. INDUSTRIAL LEADS, LEASED, AND LEAD TRACKS LISTED WITHIN THE SUBDIVISION MAY HAVE THEIR OWN UNIQUE SUBDIVISION ID#. ALWAYS REFER TO CURRENT PRINTED COPY OF THE TIMETABLE.
LLLLLLLL = 8 CHARACTERS USE DOT# AT CROSSINGS, AND
WDLLLLLL = USE 'WD' THEN MP# AT WAYSIDE LOCATIONS.
EXAMPLE = 0785WD1801.5UT
HBLLLLLL = USE 'HB' THEN MP# AT HBD SITES.
EXAMPLE = 0100-HB55.62TX
THE MP# MUST USE A DECIMAL POINT TO SEPARATE NUMBERS. FILL WITH PRECEDING DASHES AS REQUIRED.
AA = 2 CHARACTER STATE NAME FOR ALL LOCATIONS. MUST BE 14 CHARACTERS LONG, NO SPACES ALLOWED.

SITE IDENTIFIER: SSSSLLLLLLLLAA	0060-424757FIL
OPERATION TO RESUME:	RUN
SIGNAL STRENGTH dBm	
CARRIER ID	
FIRMWARE VERSION	2.3.12
BOOT VERSION:	
CMM VERSION:	
SERIAL NUMBER	
MIN ASSIGNMENT	
ESN: (MICROBURST ONLY)	
CONFIGURATION NET	MICROBURST
SILENCE INTERVAL	60 MINUTES
HEALTHCHECK INTERVAL	EVERY 2 DAYS
ALARM DEFER DELAY	240 MINUTES (4 HOURS)
SIGNAL STATUS	
SCADANET STATUS	
CALIBRATION CONSTANT CH1	
CALIBRATION CONSTANT CH2	
CALIBRATION CONSTANT CH3	
CALIBRATION CONSTANT CH4	
CALIBRATION CONSTANT PS	

FIELD PROVIDES: SAMPLED NOMINAL VOLTAGES, SCADANET STATUS CALIBRATION CONSTANTS, SERIAL NUMBER, AND SIGNAL STATUS.

CHANNEL SETUP - STANDARD CONFIGURATION 12:XR,EOe,GTe,Ba

CHANNEL NORMAL STATE	SENSE (NO/NC)	NAME FUNCTION	RECOGNITION DELAY SECONDS ACTIVE	RECOGNITION DELAY SECONDS NORMAL	RETURN TO NORMAL	REPORTING MODE	ALARM LINKED CHANNEL	ALARM LINKED CRITERIA	EVENT LOGGING ENABLED OPTIONS
POWER FAIL (CH5) ■	POWER FAIL DETECT NO	PF1n-PK AC POWER FAIL	7,200 ALARM	300 NORMAL	ENABLED	ALERT	DISABLED	N/A	
									ANALOG VALUE SENT
CH1 □	DIGITAL INPUT NO	CH1-XR XR DOWN TO LONG	1,800 ALARM	1 NORMAL	ENABLED	ALERT	DISABLED	N/A	
CH2 □	DIGITAL INPUT NO	CH2-EOe LIGHT OUT	120 ALARM	10 NORMAL	ENABLED	ALERT	DISABLED	N/A	
CH3 □	DIGITAL INPUT NO	CH3-GTe GATES NOT UP/DOWN	120 ALARM	10 NORMAL	ENABLED	ALERT	DISABLED	N/A	
									DIGITAL EVENTS
CH4 STORED NOMINAL VOLTAGE	ANALOG INPUT N/A	CH4-Ba/V BATTERY MONITOR BATTERY LOW	600 ALARM	1200 NORMAL	ENABLED	ALERT W/UPDATE	DISABLED	N/A	PF1n-PK CH1-XR CH2-EOe CH3-GTe
POWER SOURCE (CH6)	ANALOG INPUT N/A	PS-Ba/V BATTERY MONITOR BATTERY LOW	600 ALARM	1200 NORMAL	ENABLED	ALERT W/UPDATE	DISABLED	N/A	

ANALOG CHANNEL	USEFUL RANGE VOLTS LOW	USEFUL RANGE VOLTS HIGH	DISPLAYED RANGE VOLTS LOW	DISPLAYED RANGE VOLTS HIGH	RELATIVE ALARM POINT LOW	RELATIVE ALARM POINT HIGH	ABSOLUTE ALARM POINT LOW	ABSOLUTE ALARM POINT HIGH	AUTOMATIC UPDATE INTERVAL	STORED NOMINAL VOLTAGE	SAMPLED NOMINAL VOLTAGE
CH4	0.0	30.00	0.0	30.00	81%	120%	10.0	29.0	14 DAYS	12.69	
POWER SOURCE	0.0	30.00	0.0	30.00	81%	120%	10.0	29.0	14 DAYS	12.69	
RELAY OUTPUT	NAME RLY-OUT		ACTIVE SET-UP-OPEN		NORMAL CLR-DN-CLOSE		PULSE DURATION		15 SECONDS	StdCfg Ver: 2.3.3 REV'D 9-20-02	

MAINTENANCE OPERATIONS

TO START OR ABORT ANY PROCEDURE

1. PRESS THE 'CANCEL' BUTTON FIRST

WHEN RESPONDING TO A CALL, PUT THE CRTU IN THE 'SILENCE ALARMS' MODE

1. PRESS 'SELECT' AND THEN '+ ARROW' BUTTON UNTIL
   DISPLAY: ACTION?
   SILENCE ALARMS
2. PRESS THE 'SELECT' BUTTON TWICE
3. CORRECT PROBLEM AND SIMULATE NORMAL TRAIN MOVEMENT THROUGH THE LOCATION
4. EXAMINE EACH CHANNEL ON THE CRTU
5. PRESS THE '+/- ARROW' BUTTON VERIFY ALL CHANNELS INDICATE A NORMAL STATE
NORMAL STATES ARE ON THE CHANNEL SETUP CHART

CLEAR TIMERS, LATCHES AND SEND ALL NORMAL

1. DO STEPS #1 - #5 ABOVE, AND PRESS 'CANCEL'.
2. PRESS 'SELECT' AND THEN '- ARROW' BUTTON UNTIL
   DISPLAY: ACTION?
   SERVICE MODE
3. PRESS 'SELECT' AGAIN TO RESET TIMERS, AND IF
   DISPLAY: SERVICE MODE
   ALL NORMAL
4. PRESS 'SELECT' AGAIN TO CLEAR LATCHES, AND SEND ALL NORMAL. SKIP STEPS #5-#6.
5. HOWEVER, IF ALARMS ARE NOT CLEARED:
   DISPLAY: SERVICE MODE
   ALARMS PENDING/PRESENT
6. PRESS 'CANCEL', CORRECT PROBLEM AND REPEAT STEPS #2 THRU #5 UNTIL ALL NORMAL SENT.

TO CANCEL THE 'SILENCE ALARMS' MODE

1. PRESS 'SELECT' AND THEN '+ ARROW' BUTTON UNTIL
   DISPLAY: ACTION?
   CANCEL SILENCE
2. PRESS THE 'SELECT' BUTTON AGAIN

EXAMINE & SET BATTERY VOLTAGE NOMINAL VALUE

1. PRESS THE '+ ARROW' OR '- ARROW' BUTTON UNTIL THE DESIRED CHANNEL IS DISPLAYED.
   DISPLAY: PS-BA:
   13.83V NORMAL
2. VERIFY THE DISPLAYED READING WITH A DIGITAL VOLTMETER
3. PRESS THE 'SELECT' BUTTON, AND THE CRTU DISPLAY WILL SWITCH BETWEEN CURRENT/SAVED NOMINAL VOLTAGE VALUES.
   DISPLAY: NOMINAL ON #6? (CURRENT)
   13.83
   DISPLAY: SAVED NOMINAL 6 (STORED)
   12.69
4. PRESS THE 'SELECT' BUTTON AND THE CURRENT OR 'NOMINAL ON' VALUE WILL BE SAMPLED AND STORED AS THE 'SAVED NOMINAL' VALUE
5. VERIFY THE 'NOMINAL ON' AND 'SAVED NOMINAL' VALUES ARE EQUIVALENT, REPEAT STEPS #1 THRU #3 & PRESS THE 'CANCEL' BUTTON.

CAHOKIA, ILLINOIS
JEROME LANE
CHESTER SUBDIVISION
D.O.T.#424757F

Revised: 12/07/12
REMOVE CAMP JACKSON ROAD CROSSING PER FIELD AC
Rec#: 18871 WO#:
IS: 07/27/12 /
MJD/XRL/ /

Revised: 12-10-10
UPDATED FREQUENCY FOR MILDRED AVE. AT M.P. 2.02 AND INSTALLED CRTU PER FIELD AC.
Rec#: 17312 WO#: N/A
IS: 11-29-10 /
MJD/WIT/ /

MODIFICATION LEVEL	
Q.A. LAST LEVEL CHK'D.	
LAST LEVEL MOD. THIS TYP.	
LAST LEVEL BY DESIGNER.	
CHANGED FROM TYP.? Y/N	

CIRCUIT MODIFICATIONS ARE NOT TO BE MADE WITHOUT AUTHORITY FROM THE OFFICE OF SIGNAL DESIGN

DES: WITT IND
DIG: WITT IND
CHK: EML
A.F.E.
ID=127500181.2A

UNION PACIFIC RAILROAD
VALLEY JCT., ILLINOIS TO
CHARLESTON JCT., MISSOURI
C.T.C. CIRCUITS
Office of AVP Engineering - Signal
OMAHA NEBR.

DATE 10-01-01
SHEET 2A
DWG 1.81
S-1275

127500181.2A 2/29/2016 10:58:53 AM

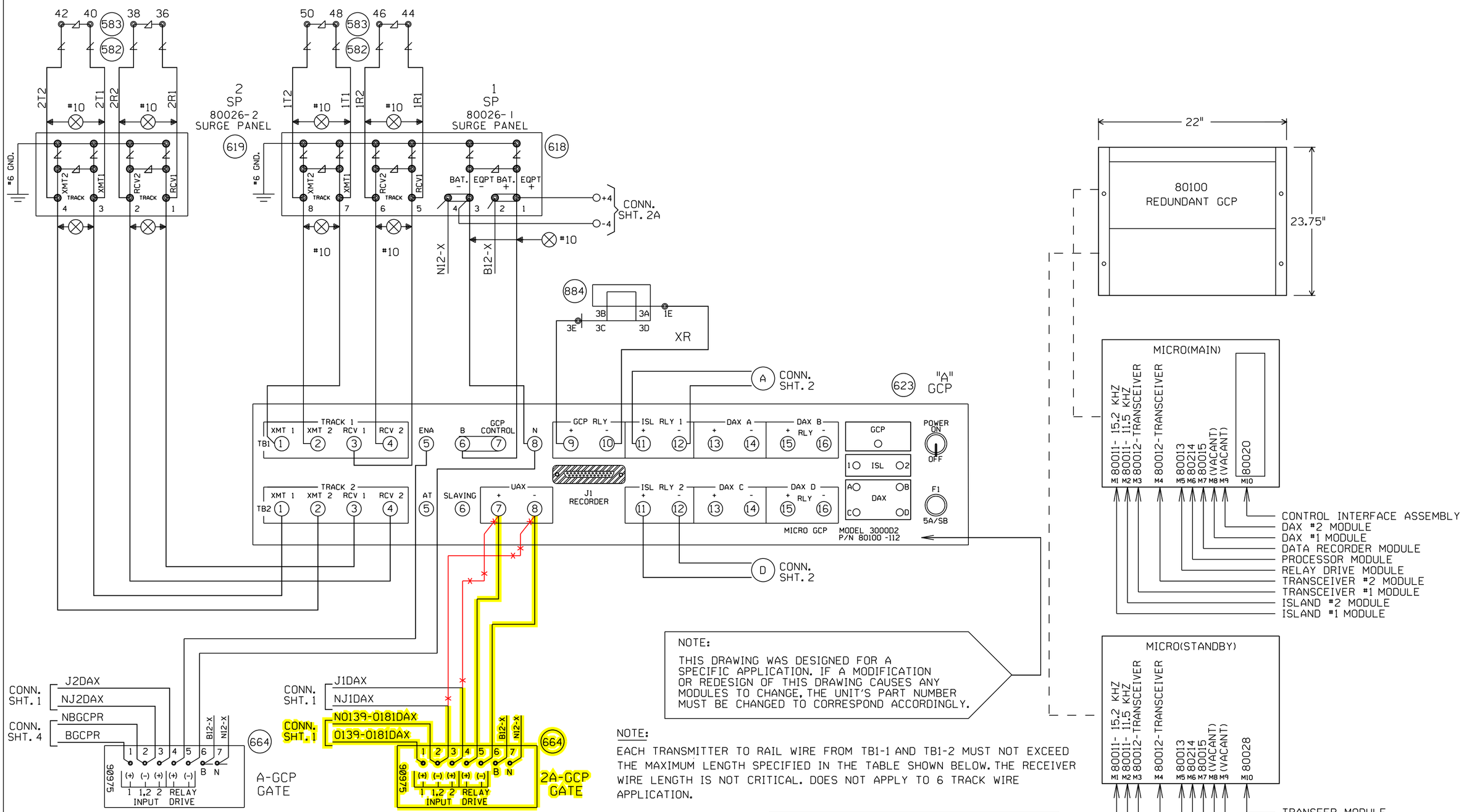

NOTE:

THIS DRAWING WAS DESIGNED FOR A SPECIFIC APPLICATION. IF A MODIFICATION OR REDESIGN OF THIS DRAWING CAUSES ANY MODULES TO CHANGE, THE UNIT'S PART NUMBER MUST BE CHANGED TO CORRESPOND ACCORDINGLY.

NOTE:

EACH TRANSMITTER TO RAIL WIRE FROM TB1-1 AND TB1-2 MUST NOT EXCEED THE MAXIMUM LENGTH SPECIFIED IN THE TABLE SHOWN BELOW. THE RECEIVER WIRE LENGTH IS NOT CRITICAL. DOES NOT APPLY TO 6 TRACK WIRE APPLICATION.

"Mf" FREQUENCY (HZ)	MAXIMUM TRANSMIT WIRE LENGTH (FEET)
86	100
114	125
156	150
211	200
285-970	250

CAHOKIA, ILLINOIS
JEROME LANE
CHESTER SUBDIVISION
D.O.T.#424 757 F

Designed: 1/5/16 INSTALL NEW CABIN, GATES, AND FLASHERS AIRFLITE ROAD M.P.1.40 Rec#: WO#: 31926 IS: ÆJH / ATG/JVJ	Revised: 08-03-15 ADDED "C" GCP 3000 PER FIELD AC. PID: N/A WO#: N/A IS: 07-31-15 / Rec#:23039 ACF/WIT / /	Revised: 12/07/12 REMOVE CAMP JACKSON ROAD CROSSING PER FIELD AC Rec#: 18871 WO#: IS: 07/27/12 / MJD/XRL / /	Revised: 12-10-10 UPDATED FREQUENCY FOR MILDRED AVE. AT M.P. 2.02 AND INSTALLED CRTU PER FIELD AC. Rec#: 17312 WO#: N/A IS: 11-29-10 / MJD/WIT / /	REV. 10-27-00 INSTALLED CONSTANT WARNING ON JEROME LANE. I.S. 8-29-00 JJF/JNM TG/WITT/SSS/JNM	MODIFICATION LEVEL		CIRCUIT MODIFICATIONS ARE NOT TO BE MADE WITHOUT AUTHORITY FROM THE OFFICE OF SIGNAL DESIGN	DES: SSS DIG: SSS CHK: JJF A.F.E. 27553 ID: 127500181.3	UNION PACIFIC RAILROAD VALLEY JCT., ILLINOIS TO CHARLESTON JCT., MISSOURI C.T.C. CIRCUITS Office of AVP Engineering - Signal OMAHA NEBR.	DATE 1-29-99 SHEET 3 DWG 1.81 S-1275
					Q.A. LAST LEVEL CHK'D.	CI				
					LAST LEVEL MOD. THIS TYP.	CK				
					LAST LEVEL BY DESIGNER.	CO				
					CHANGED FROM TYP.? Y/N	Y				

(REV. 6-1-98)(3K2TKUG.3)

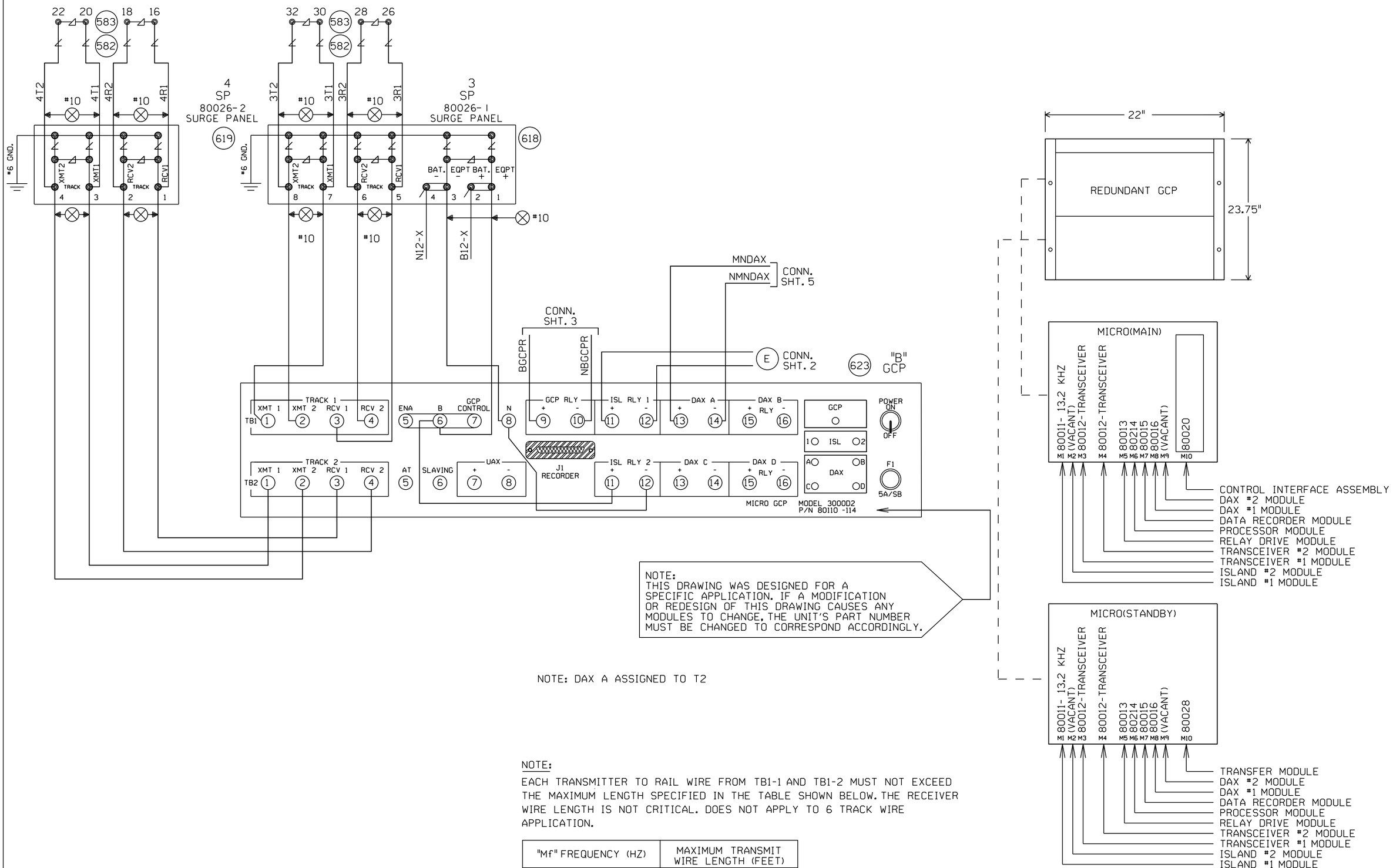

NOTE:
THIS DRAWING WAS DESIGNED FOR A SPECIFIC APPLICATION. IF A MODIFICATION OR REDESIGN OF THIS DRAWING CAUSES ANY MODULES TO CHANGE, THE UNIT'S PART NUMBER MUST BE CHANGED TO CORRESPOND ACCORDINGLY.

NOTE: DAX A ASSIGNED TO T2

NOTE:

EACH TRANSMITTER TO RAIL WIRE FROM TB1-1 AND TB1-2 MUST NOT EXCEED THE MAXIMUM LENGTH SPECIFIED IN THE TABLE SHOWN BELOW. THE RECEIVER WIRE LENGTH IS NOT CRITICAL. DOES NOT APPLY TO 6 TRACK WIRE APPLICATION.

"Mf" FREQUENCY (HZ)	MAXIMUM TRANSMIT WIRE LENGTH (FEET)
86	100
114	125
156	150
211	200
285-970	250

CAHOKIA, ILLINOIS
JEROME LANE
CHESTER SUBDIVISION
D.O.T.#424 757 F

Revised: 08-03-15
ADDED "C" GCP 3000 PER FIELD AC.
PID: N/A WO#: N/A
IS: 07-31-15 /
Rec#:23039 ACF/WIT / /

Revised: 12/07/12
REMOVE CAMP JACKSON ROAD CROSSING PER FIELD AC
Rec#: 18871 WO#:
IS: 07/27/12 /
MJD/XRL / /

REV. 10-27-00
INSTALLED CONSTANT WARNING ON JEROME LANE.
I.S. 8-29-00
JJF/JNM
TG/WITT/SSS/JNM

MODIFICATION LEVEL	
Q.A. LAST LEVEL CHK'D.	CI
LAST LEVEL MOD. THIS TYP.	CK
LAST LEVEL BY DESIGNER.	CO
CHANGED FROM TYP.? Y/N	Y

CIRCUIT MODIFICATIONS ARE NOT TO BE MADE WITHOUT AUTHORITY FROM THE OFFICE OF SIGNAL DESIGN

DES: SSS
DIG: SSS
CHK: JJF
A.F.E. 27553
ID= 127500181.4

UNION PACIFIC RAILROAD
VALLEY JCT., ILLINOIS TO
CHARLESTON JCT., MISSOURI
C.T.C. CIRCUITS
Office of AVP Engineering - Signal OMAHA NEBR.

DATE 1-29-99
SHEET 4
DWG 1.81
S-1275

(REV. 6-1-98)(3K2TKUG.4)

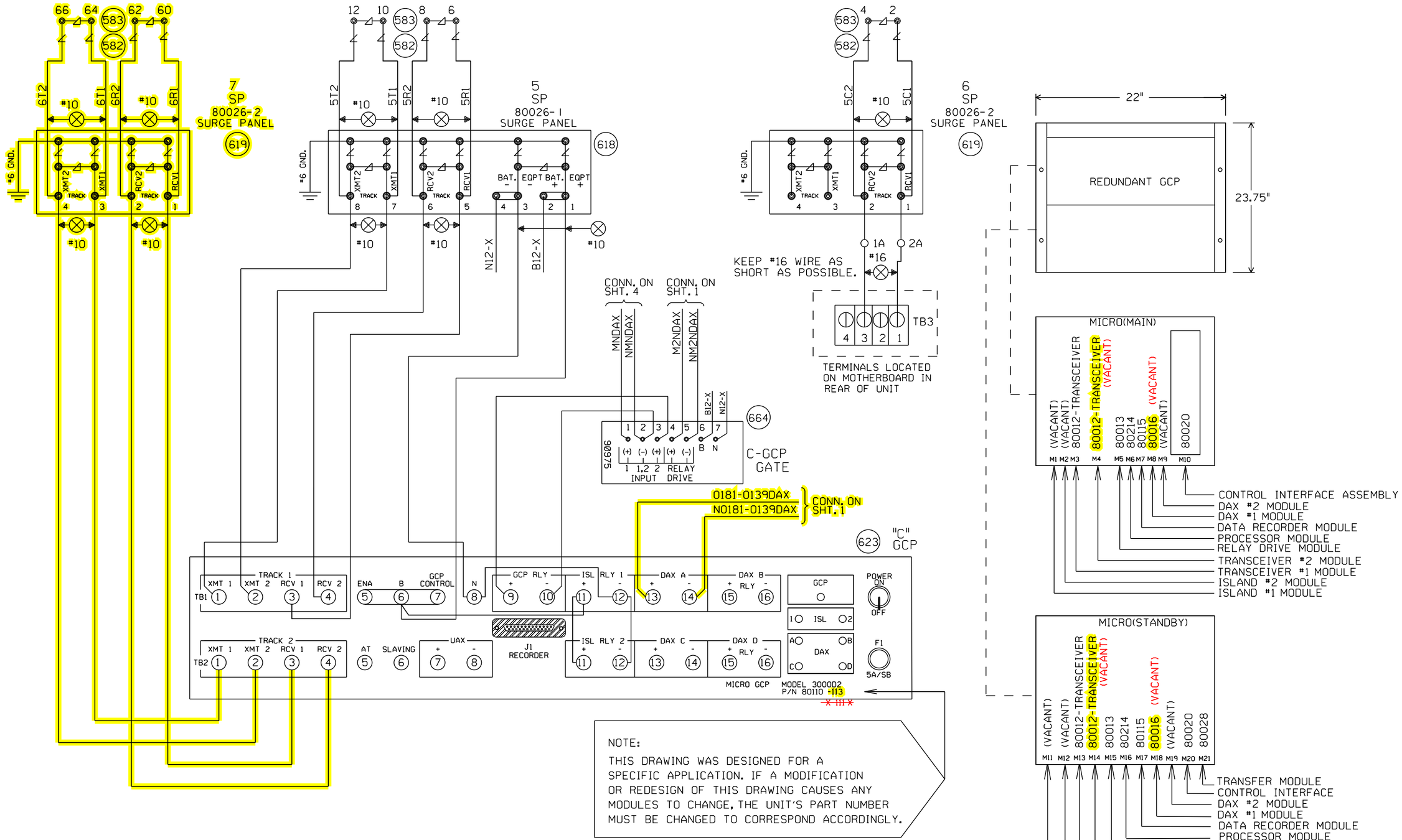

NOTE:

THIS DRAWING WAS DESIGNED FOR A SPECIFIC APPLICATION. IF A MODIFICATION OR REDESIGN OF THIS DRAWING CAUSES ANY MODULES TO CHANGE, THE UNIT'S PART NUMBER MUST BE CHANGED TO CORRESPOND ACCORDINGLY.

NOTE:

EACH TRANSMITTER TO RAIL WIRE FROM TB1-1 AND TB1-2 MUST NOT EXCEED THE MAXIMUM LENGTH SPECIFIED IN THE TABLE SHOWN BELOW. THE RECEIVER WIRE LENGTH IS NOT CRITICAL. DOES NOT APPLY TO 6 TRACK WIRE APPLICATION.

"Mf" FREQUENCY (HZ)	MAXIMUM TRANSMIT WIRE LENGTH (FEET)
86	100
114	125
156	150
211	200
285-970	250

Designed: 1/5/16
INSTALL NEW CABIN, GATES, AND FLASHERS AIRFLITE ROAD M.P.1.40
Rec*: WO*: 31926
IS: /EJH
/ /ATG/JVJ

Revised: 08-03-15
ADDED "C" GCP 3000 PER FIELD AC.
PID: N/A WO*: N/A
IS: 07-31-15 /
Rec*:23039 ACF/WIT / /

CIRCUIT MODIFICATIONS ARE NOT TO BE MADE WITHOUT AUTHORITY FROM THE OFFICE OF SIGNAL DESIGN

DATE: 08-03-15
DES:
CHK:
A.F.E.

UNION PACIFIC RAILROAD
CAHOKIA, ILLINOIS
JEROME LANE
CHESTER SUBDIVISION
Office of Sr. AVP Engineering - Signal/TCO Omaha, Nebraska

SH. 5
DOT# 424757F
M.P. 1.81
ID= 127500181.5

127500181.5 2/29/2016 10:58:59 AM

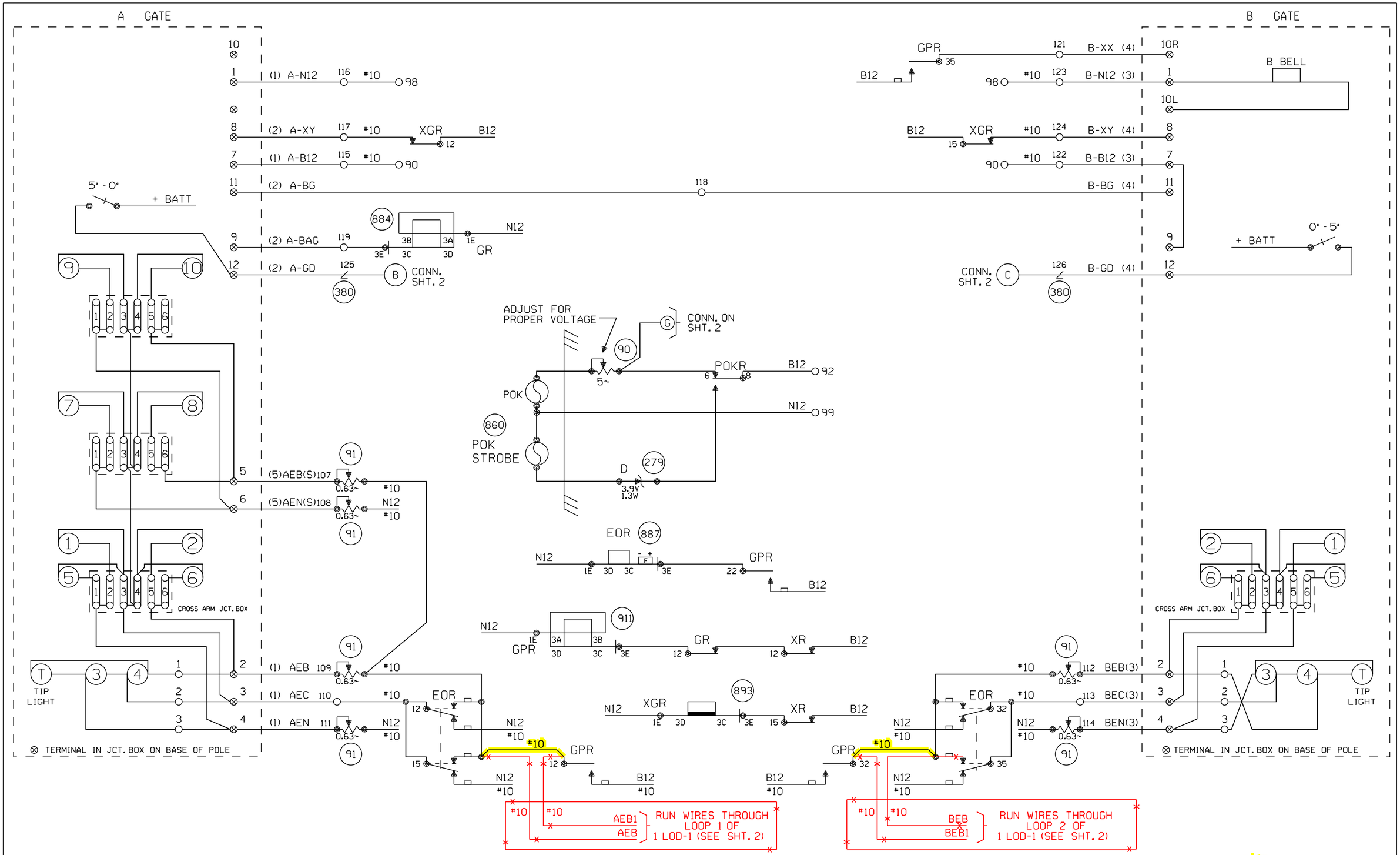

CABLE NO. 1 5C. NO.6 B.T.
CABLE NO. 2 7C. NO.14 B.T.
CABLE NO. 3 5C. NO.6 B.T.
CABLE NO. 4 7C. NO.14 B.T.
CABLE NO. 5 2C. NO.6 B.T.

CAHOKIA, ILLINOIS
JEROME LANE
CHESTER SUBDIVISION
D.O.T.#424 757 F

Designed: 1/5/16
INSTALL NEW CABIN, GATES, AND FLASHERS AIRFLITE ROAD M.P.1.40
Rec#: WO#: 31926
IS: ÆJH / ATG/JVJ

Revised: 08-03-15
ADDED "C" GCP 3000 PER FIELD AC.
PID: N/A WO#: N/A
IS: 07-31-15 /
Rec#:23039 ACF/WIT / /

Revised: 12/07/12
REMOVE CAMP JACKSON ROAD CROSSING PER FIELD AC
Rec#: 18871 WO#:
IS: 07/27/12 /
MJD/XRL / /

Revised: 12-10-10
UPDATED FREQUENCY FOR MILDRED AVE. AT M.P. 2.02 AND INSTALLED CRTU PER FIELD AC.
Rec#: 17312 WO#: N/A
IS: 11-29-10 /
MJD/WIT / /

REV. 10-27-00
INSTALLED CONSTANT WARNING ON JEROME LANE.
I.S. 8-29-00
JJF/JNM
TG/WITT/SSS/JNM

MODIFICATION LEVEL	
Q.A. LAST LEVEL CHK'D.	CI
LAST LEVEL MOD. THIS TYP.	CK
LAST LEVEL BY DESIGNER.	CO
CHANGED FROM TYP.? Y/N	Y

CIRCUIT MODIFICATIONS ARE NOT TO BE MADE WITHOUT AUTHORITY FROM THE OFFICE OF SIGNAL DESIGN

DES: SSS
DIG: SSS
CHK: JJF
A.F.E. 27553
ID= 127500181.6

UNION PACIFIC RAILROAD
VALLEY JCT., ILLINOIS TO
CHARLESTON JCT., MISSOURI
C.T.C. CIRCUITS
Office of AVP Engineering - Signal OMAHA NEBR.

DATE 1-29-99
SHEET 6
DWG 1.81
S-1275

(REV. 6-1-98) (GFSL.TYP)

SAFTRAN MODEL "EM" (GRISWOLD)

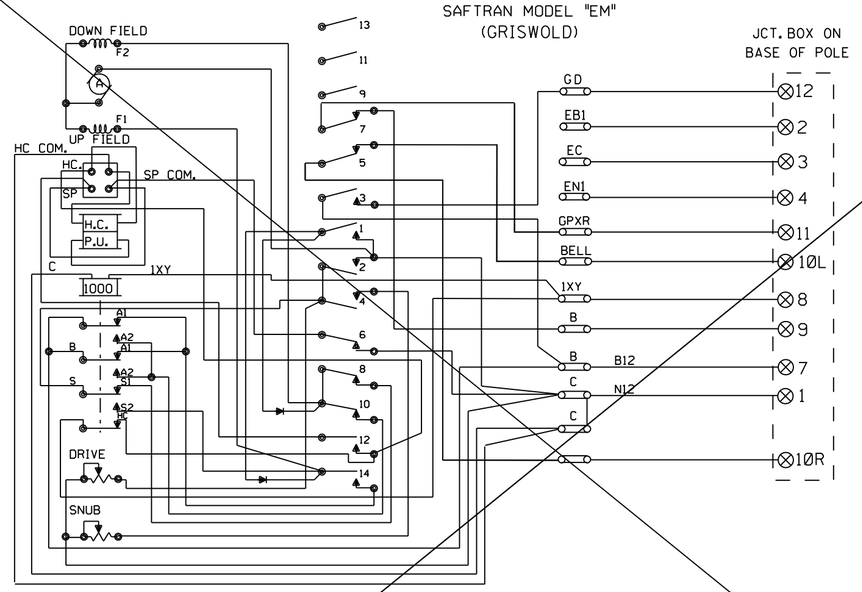

SPACE NO.	CONTACT OPERATION: CONTACT CLOSED – CLEARING	CONTACT OPERATION: CONTACT CLOSED – RETURNING	CIRCUIT BREAKER FUNCTIONS: USE OF CONTACT
1	40°50°85°90°	90°85°50°40°	CONTROL OF ARC SUPRESSING RECTIFIERS
2	0°10°	10°0°	FINAL DOWN SNUB
3	0°5°	5°0°	GATE DOWN
4	0°44°	44°0°	DOWN SNUB
5	10°90°	90°10°	TO CUT OFF BELL WHEN GATE ARM IS DOWN
6	80°90°	90°80°	CONTROL OF SOLENOID PICK UP
7	80°90°	90°80°	TO CONTROL GPR RELAY & KEEP FLASHING LIGHTS
			OPERATING UNTIL GATES CLEAR
8	0°5°80°90°	90°80°5°0°	UP SNUB
9			SPARE
10	45°90°	90°45°	MOTOR CUTOUT(DOWN)
11			SPARE
12	0°90°	80°0°	OPERATED BY MOTOR CUTOUT SWITCH TO CUT OFF CURRENT
			FROM SOLENOID PICKUP
13			NO CAM
14	0°90°	80°0°	MOTOR CUTOUT(UP)

W.R.R.S. CO TYPE D NO.3567 GATE MECHANISM

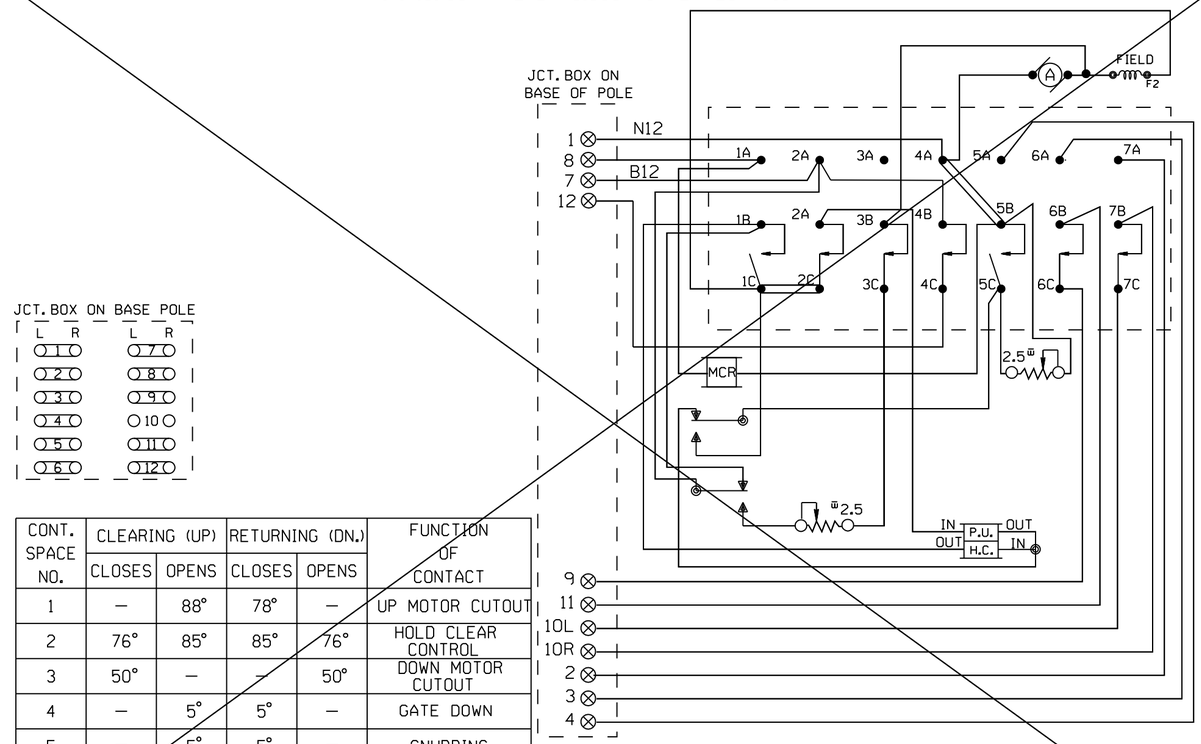

CONT. SPACE NO.	CLEARING (UP) CLOSES	CLEARING (UP) OPENS	RETURNING (DN.) CLOSES	RETURNING (DN.) OPENS	FUNCTION OF CONTACT
1	—	88°	78°	—	UP MOTOR CUTOUT
2	76°	85°	85°	76°	HOLD CLEAR CONTROL
3	50°	—	—	50°	DOWN MOTOR CUTOUT
4	—	5°	5°	—	GATE DOWN
5	—	5°	5°	—	SNUBBING
6	85°			85°	XGCP CONTROL
7	6°	—	—	6°	BELL CONTROL

MECHANISM SHOWN IN CLEAR POSITION.

SAFETRAN PRODUCTS MODEL "S" MECHANISM

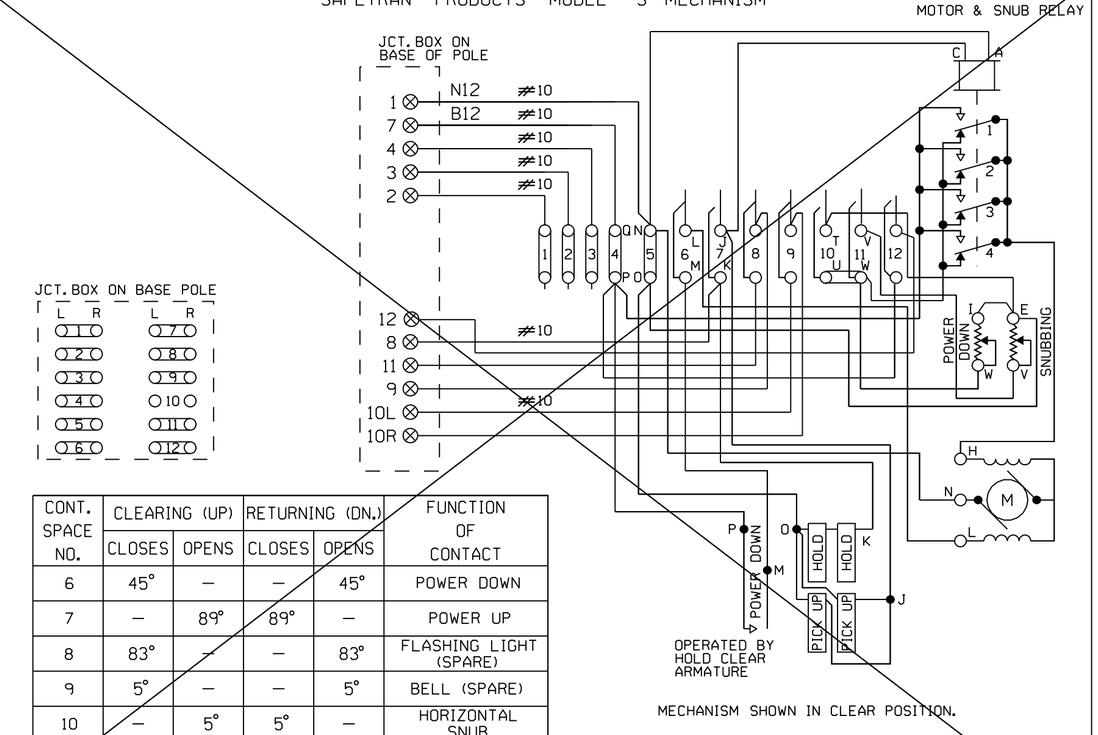

CONT. SPACE NO.	CLEARING (UP) CLOSES	CLEARING (UP) OPENS	RETURNING (DN.) CLOSES	RETURNING (DN.) OPENS	FUNCTION OF CONTACT
6	45°	—	—	45°	POWER DOWN
7	—	89°	89°	—	POWER UP
8	83°	—	—	83°	FLASHING LIGHT (SPARE)
9	5°	—	—	5°	BELL (SPARE)
10	—	5°	5°	—	HORIZONTAL SNUB
11	—	45°	45°	—	DOWN SNUB
12	—	5°	5°	—	GATE DOWN

MECHANISM SHOWN IN CLEAR POSITION.

WCH 3593-E

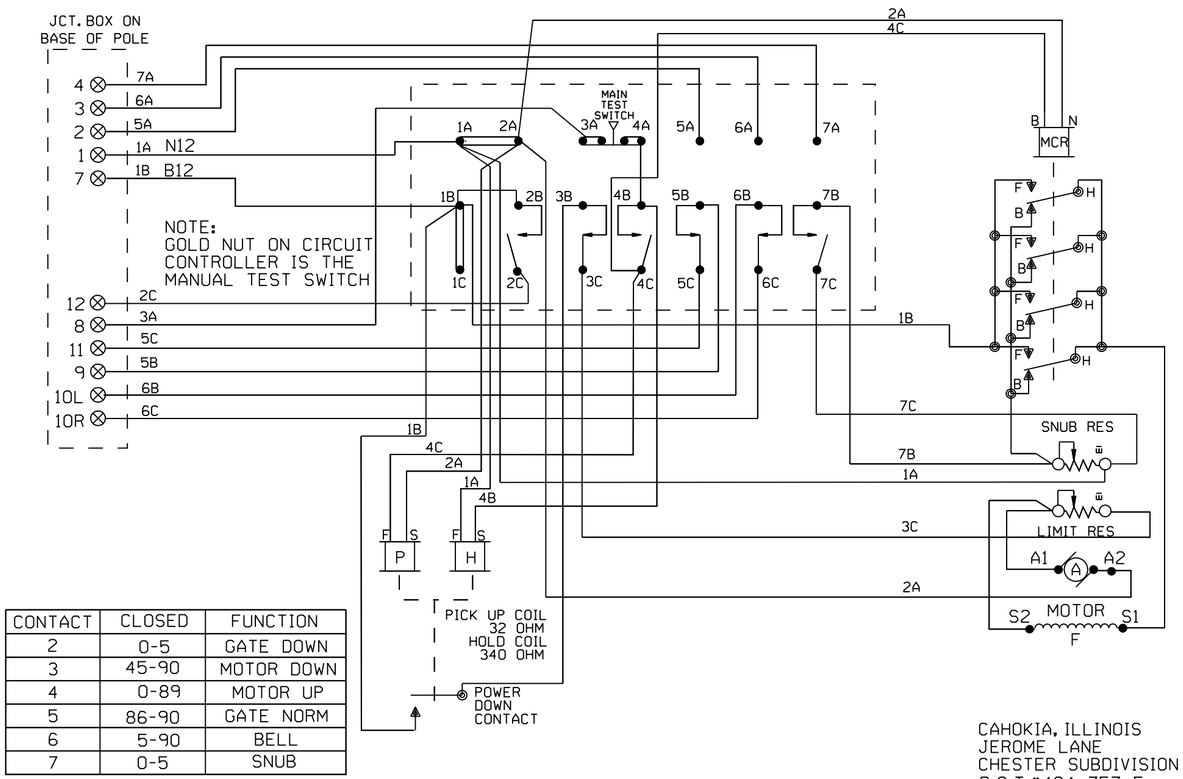

CONTACT	CLOSED	FUNCTION
2	0-5	GATE DOWN
3	45-90	MOTOR DOWN
4	0-89	MOTOR UP
5	86-90	GATE NORM
6	5-90	BELL
7	0-5	SNUB

CAHOKIA, ILLINOIS
JEROME LANE
CHESTER SUBDIVISION
D.O.T.#424 757 F

Revised: 08-03-15 ADDED "C" GCP 3000 PER FIELD AC. PID: N/A WO#: N/A IS: 07-31-15 / Rec#:23039 ACF/WIT / /	Revised: 12/07/12 REMOVE CAMP JACKSON ROAD CROSSING PER FIELD AC Rec#: 18871 WO#: IS: 07/27/12 / MJD/XRL / /
REV. 10-27-00 INSTALLED CONSTANT WARNING ON JEROME LANE. I.S. 8-29-00 JJF/JNM TG/WITT/SSS/JNM	

MODIFICATION LEVEL	
Q.A. LAST LEVEL CHK'D.	CI
LAST LEVEL MOD. THIS TYP.	CK
LAST LEVEL BY DESIGNER.	CO
CHANGED FROM TYP.? Y/N	N

CIRCUIT MODIFICATIONS ARE NOT TO BE MADE WITHOUT AUTHORITY FROM THE OFFICE OF SIGNAL DESIGN

DES: SSS
DIG: SSS
CHK: JJF
A.F.E. 27553
ID= 127500181.7

UNION PACIFIC RAILROAD
VALLEY JCT., ILLINOIS TO
CHARLESTON JCT., MISSOURI
C.T.C. CIRCUITS
Office of AVP Engineering - Signal OMAHA NEBR.

DATE 1-29-99
SHEET 7
DWG 1.81
S-1275

(REV. 6-1-98)(GWIRING.DGN)

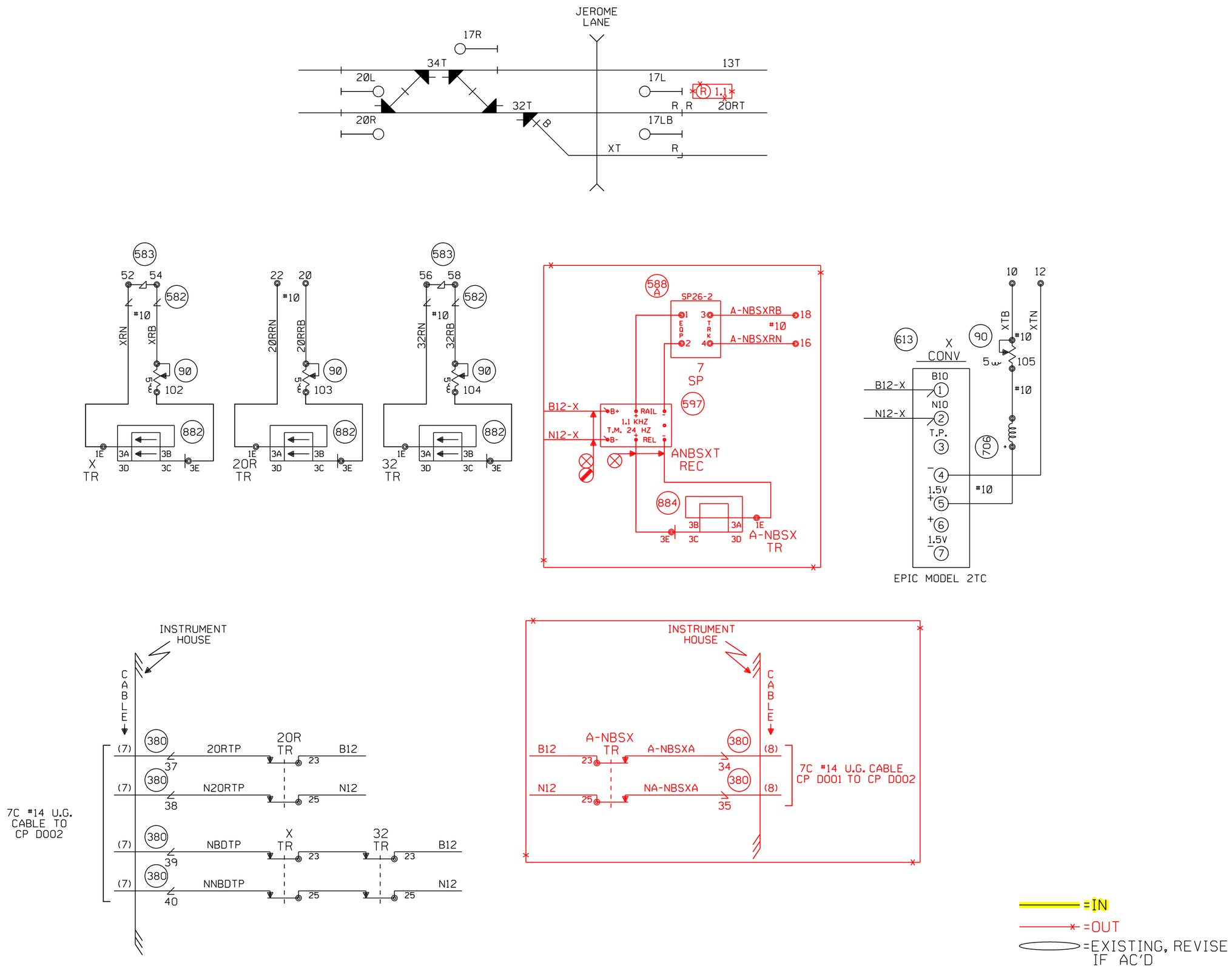

CAHOKIA, ILLINOIS
JEROME LANE
CHESTER SUBDIVISION
D.O.T.#424 757 F

Designed: 1/5/16 INSTALL NEW CABIN, GATES, AND FLASHERS AIRFLITE ROAD M.P.1.40 Rec#: WO#: 31926 IS: /ÆJH / /ATG/JVJ	Revised: 08-03-15 ADDED "C" GCP 3000 PER FIELD AC. PID: N/A WO#: N/A IS: 07-31-15 / Rec#:23039 ACF/WIT / /	Revised: 12/07/12 REMOVE CAMP JACKSON ROAD CROSSING PER FIELD AC Rec#: 18871 WO#: IS: 07/27/12 / MJD/XRL/ /	Revised: 12-10-10 UPDATED FREQUENCY FOR MILDRED AVE. AT M.P. 2.02 AND INSTALLED CRTU PER FIELD AC. Rec#: 17312 WO#: N/A IS: 11-29-10 / MJD/WIT/ /	REV. 10-27-00 INSTALLED CONSTANT WARNING ON JEROME LANE. I.S. 8-29-00 JJF/JNM TG/WITT/SSS/JNM	MODIFICATION LEVEL Q.A. LAST LEVEL CHK'D. CI LAST LEVEL MOD. THIS TYP. CK LAST LEVEL BY DESIGNER. CO CHANGED FROM TYP.? Y/N Y	CIRCUIT MODIFICATIONS ARE NOT TO BE MADE WITHOUT AUTHORITY FROM THE OFFICE OF SIGNAL DESIGN	DES: SSS DIG: SSS CHK: JJF A.F.E. 27553 ID= 127500181.8

UNION PACIFIC RAILROAD
VALLEY JCT., ILLINOIS TO
CHARLESTON JCT., MISSOURI
C.T.C. CIRCUITS
Office of AVP Engineering - Signal OMAHA NEBR.

DATE 1-29-99
SHEET 8
DWG 1.81
S-1275

(REV. 6-1-98) (HCA2TKGC.2)

127500181.8 2/29/2016 10:29:05 AM

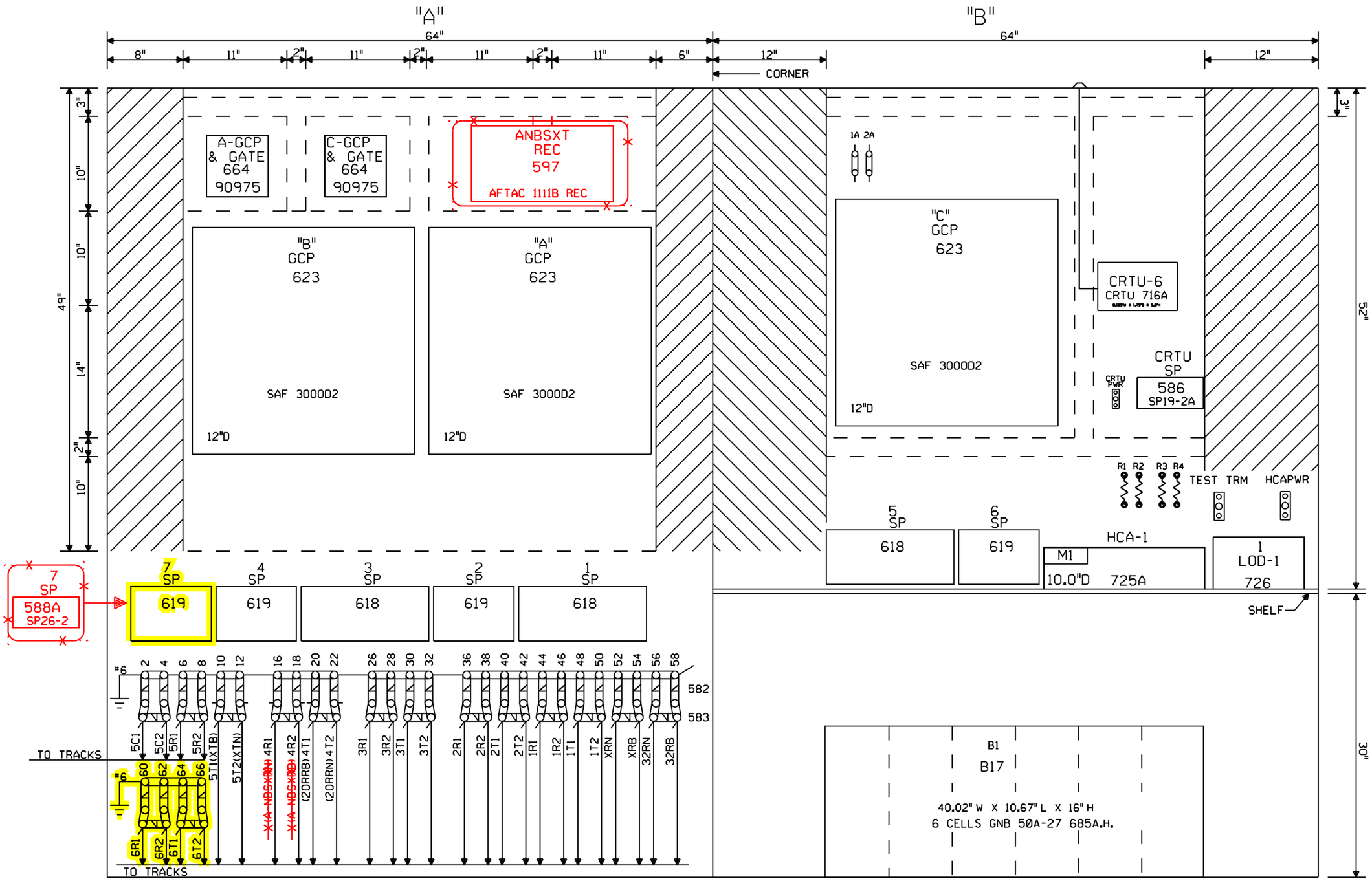

=IN
=OUT

NOTE: ALL DIMENSIONS SHOWN ARE APPROXIMATE.

0 1 2 3 4 FEET

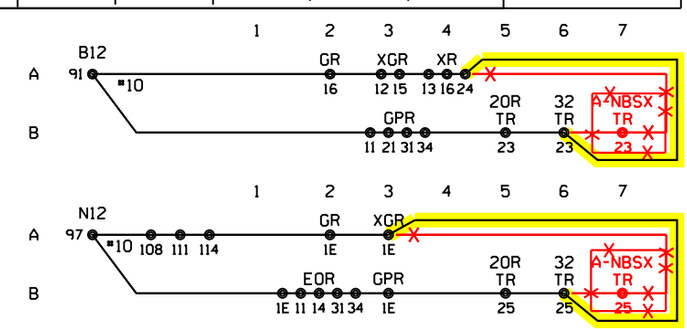

CAHOKIA, ILLINOIS
JEROME LANE
CHESTER SUBDIVISION
D.O.T.#424 757 F

Designed: 1/5/16 INSTALL NEW CABIN, GATES, AND FLASHERS AIRFLITE ROAD M.P.1.40 Rec#: IS: WO#: 31926 /EJH /ATG/JVJ	Revised: 08-03-15 ADDED "C" GCP 3000 PER FIELD AC. PID: N/A IS: 07-31-15 Rec#:23039 WO#: N/A ACF/WIT	Revised: 12/07/12 REMOVE CAMP JACKSON ROAD CROSSING PER FIELD AC Rec#: 18871 IS: 07/27/12 WO#: MJD/XRL	Revised: 12-10-10 UPDATED FREQUENCY FOR MILDRED AVE. AT M.P. 2.02 AND INSTALLED CRTU PER FIELD AC. Rec#: 17312 IS: 11-29-10 WO#: N/A MJD/WIT	REV. 10-27-00 INSTALLED CONSTANT WARNING ON JEROME LANE. I.S. 8-29-00 JJF/JNM TG/WITT/SSS/JNM	MODIFICATION LEVEL		CIRCUIT MODIFICATIONS ARE NOT TO BE MADE WITHOUT AUTHORITY FROM THE OFFICE OF SIGNAL DESIGN
					Q.A. LAST LEVEL CHK'D.	CI	
					LAST LEVEL MOD. THIS TYP.	CK	
					LAST LEVEL BY DESIGNER.	CO	
					CHANGED FROM TYP.? Y/N	Y	

DES: SSS
DIG: SSS
CHK: JJF
A.F.E. 27553
ID=127500181.9

UNION PACIFIC RAILROAD
VALLEY JCT., ILLINOIS TO
CHARLESTON JCT., MISSOURI
C.T.C. CIRCUITS
Office of AVP Engineering - Signal OMAHA NEBR.

DATE 1-29-99
SHEET 9
DWG 1.81
S-1275

(REV. 6-1-98) (3K2TKUG.7)

127500181.9 2/29/2016 10:59:09 AM

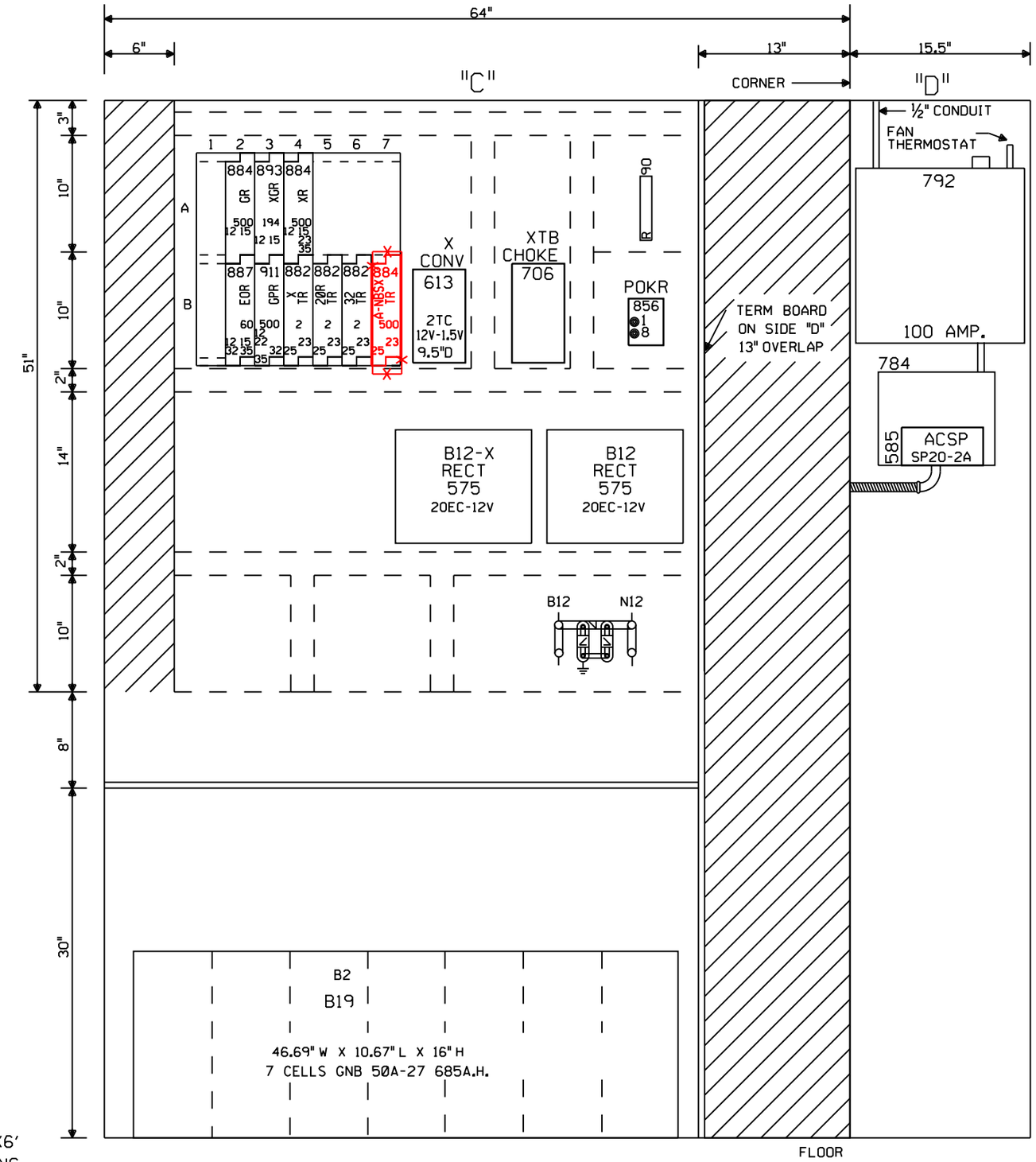

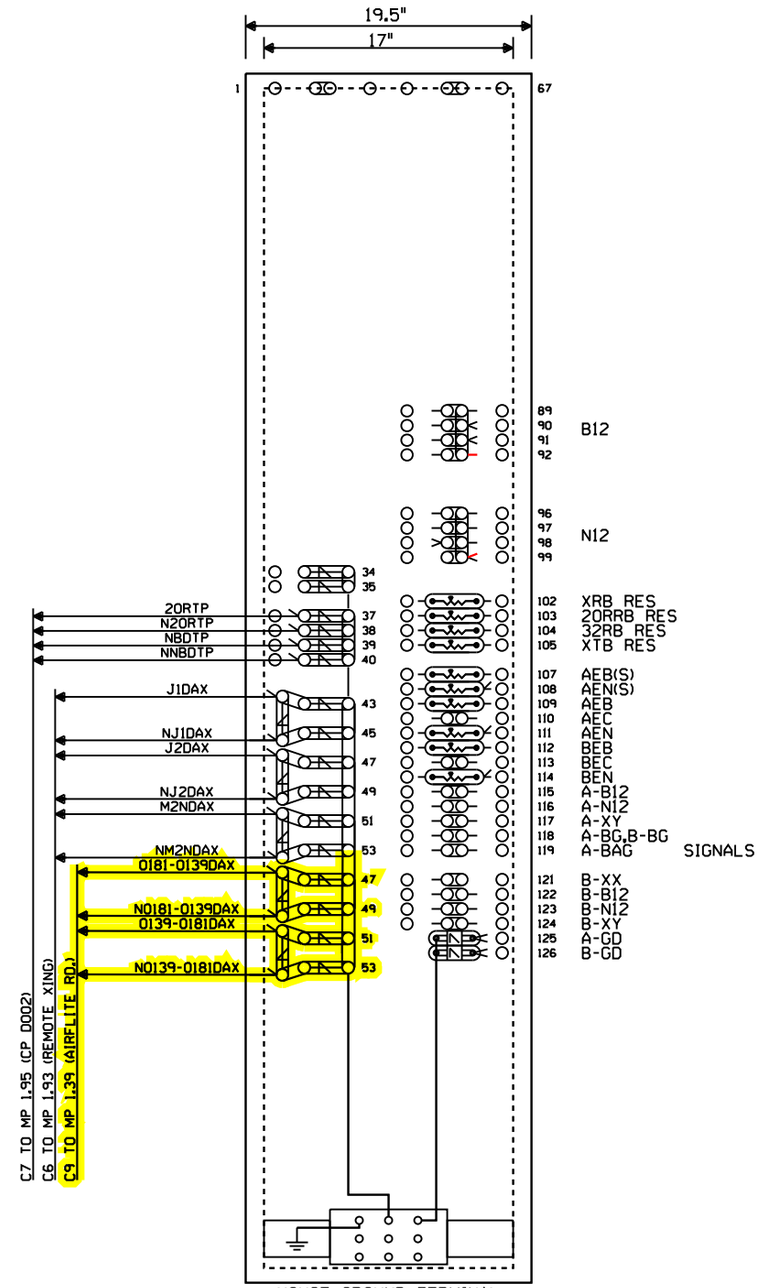

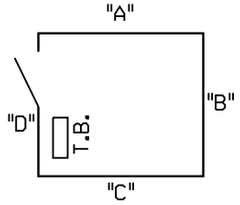

=IN

=OUT

NOTE: ALL DIMENSIONS SHOWN ARE APPROXIMATE.

0 1 2 3 4 FEET

CAHOKIA, ILLINOIS
JEROME LANE
CHESTER SUBDIVISION
D.O.T.#424 757 F

Designed: 1/5/16 INSTALL NEW CABIN, GATES, AND FLASHERS AIRFLITE ROAD M.P.1.40 Rec#: WO#: 31926 IS: ÆJH / ATG/JVJ	Revised: 08-03-15 ADDED "C" GCP 3000 PER FIELD AC. PID: N/A WO#: N/A IS: 07-31-15 / Rec#:23039 ACF/WIT / /	Revised: 12/07/12 REMOVE CAMP JACKSON ROAD CROSSING PER FIELD AC Rec#: 18871 WO#: IS: 07/27/12 / MJD/XRL / /	Revised: 12-10-10 UPDATED FREQUENCY FOR MILDRED AVE. AT M.P. 2.02 AND INSTALLED CRTU PER FIELD AC. Rec#: 17312 WO#: N/A IS: 11-29-10 / MJD/WIT / /	REV. 10-27-00 INSTALLED CONSTANT WARNING ON JEROME LANE. I.S. 8-29-00 JJF/JNM TG/WITT/SSS/JNM	MODIFICATION LEVEL		CIRCUIT MODIFICATIONS ARE NOT TO BE MADE WITHOUT AUTHORITY FROM THE OFFICE OF SIGNAL DESIGN
					Q.A. LAST LEVEL CHK'D.	CI	
					LAST LEVEL MOD. THIS TYP.	CK	
					LAST LEVEL BY DESIGNER.	CO	
					CHANGED FROM TYP.? Y/N	Y	

DES: SSS
DIG: SSS
CHK: JJF
A.F.E. 27553
ID=127500181.10

UNION PACIFIC RAILROAD
VALLEY JCT., ILLINOIS TO
CHARLESTON JCT., MISSOURI
C.T.C. CIRCUITS
Office of Sr AVP Engineering - Signal/TCO Omaha, Nebraska

DATE 1-29-99
SHEET 10
M.P. 1.81
S-1275

(REV. 6-1-98) (GC.DGN)

127500181.10 2/29/2016 10:59:11 AM