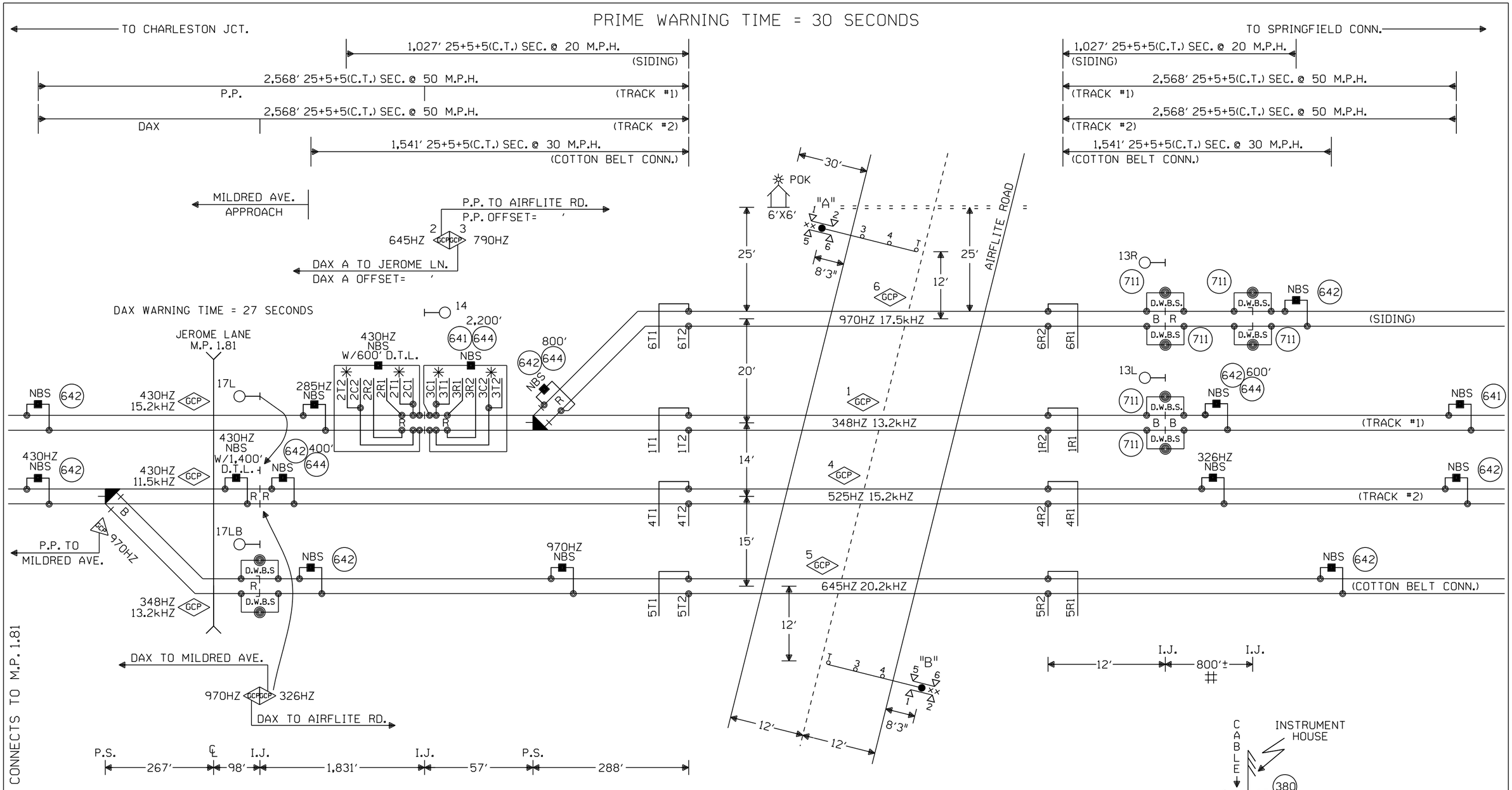

NOTES:

⊗ = TWISTED WIRES
INSULATED 1 TWIST PER FT.
ALL TRACK WIRES 2C. #6

TRANSMITTER AND RECEIVER LEADS TO BE SEPARATED BY AT LEAST 12" IN TRENCH, LENGTHS SHOULD NOT EXCEED MANUFACTURER'S RECOMMENDATION.

TOP OF FOUNDATION TO BE AT SAME ELEVATION AS THE SURFACE OF THE TRAVELED WAY & NO MORE THAN 4" ABOVE THE SURFACE OF THE GROUND.

ALL BUNGALOW WIRING TO BE #16 AWG FLEX UNLESS OTHERWISE SPECIFIED EXCEPT ALL GROUND WIRE TO BE #6 AWG FLEX OR LARGER.

ALL WIRING IN GATE MECHANISM TO BE #10 "AWG FLEX".

REFER TO UP STANDARD DWG FOR BUNGALOW GROUNDING.

PORTABLE GENERATOR EXTENSION CORD FOR 240V TO 240V IS PROVIDED AS WELL AS A 120V TO 240V ADAPTER.

ALL LIGHTS TO BE 12" ROUNDELS.

= = = = = = 4" X 50' CONDUIT

LIGHTS: LED LIGHTS

GATE "A": 20'
GATE "B": 20'

xx = BELL

SIDING ISLAND DISTANCE 126' MINIMUM 120' REQUIRED

TRK 1 ISLAND DISTANCE 126' MINIMUM 120' REQUIRED

TRK 2 ISLAND DISTANCE 126' MINIMUM 120' REQUIRED

COTTON BELT CONN. ISLAND DISTANCE 126' MINIMUM 120' REQUIRED

PREFERRED ISLAND WIRE CONNECTIONS ARE A MINIMUM 50' FROM EDGE OF ROAD

✳ TIE THE CHECK AND TRANSMIT TRACK WIRES TOGETHER AT OR NEAR THE BOOTLEG CONNECTION AND RUN A SINGLE WIRE TO THE RAIL.

OFFSET AND ISLAND DISTANCES TO BE VERIFIED BY FIELD

W(S) ← → E(N)

CABLE TABULATION

CABLE NO.5 7C.NO. 14 U.G.B.T. HOUSE TO M.P. 1.81

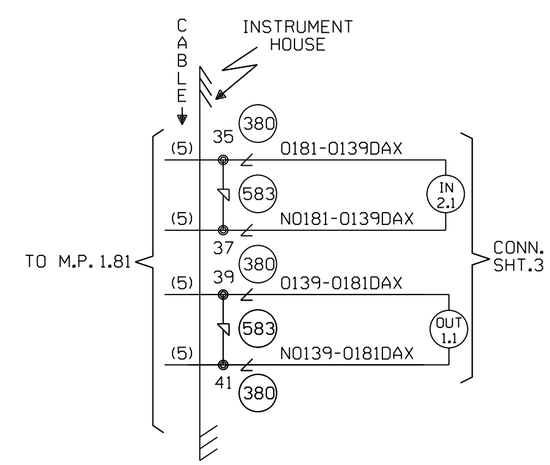

CONSTRUCTION NOTES

=FIELD VERIFY MEASUREMENT

NEW SHEET

					Designed: 12/29/15 INSTALL NEW CABIN, GATES, AND FLASHERS AIRFLITE ROAD M.P.1.39 Rec#: 15: WO#: 31926 ÆJH /ATG/JVJ	MODIFICATION LEVEL		CIRCUIT MODIFICATIONS ARE NOT TO BE MADE WITHOUT AUTHORITY FROM THE OFFICE OF SIGNAL DESIGN	Date: 12/17/15 Des: ATG Chk: EJH AFE: 31926	UNION PACIFIC RAILROAD CAHOKIA, IL AIRFLITE ROAD CHESTER SUBDIVISION Office of AVP Engineering - Signal Omaha, Nebraska	Sh.: 1 DOT 424756Y MP: 1.39 ID: 1275139.1X
						Q. A. LAST LEVEL CHECKED	DU				
						LAST LEVEL MOD THIS TYPICAL	DU				
						LAST LEVEL BY DESIGNER	DU				
						CHANGED FROM TYPICAL?	Y				
						REV 01.24.11 4K 2TKUGTYP.1					

1275139.1X 2/29/2016 10:57:05 AM

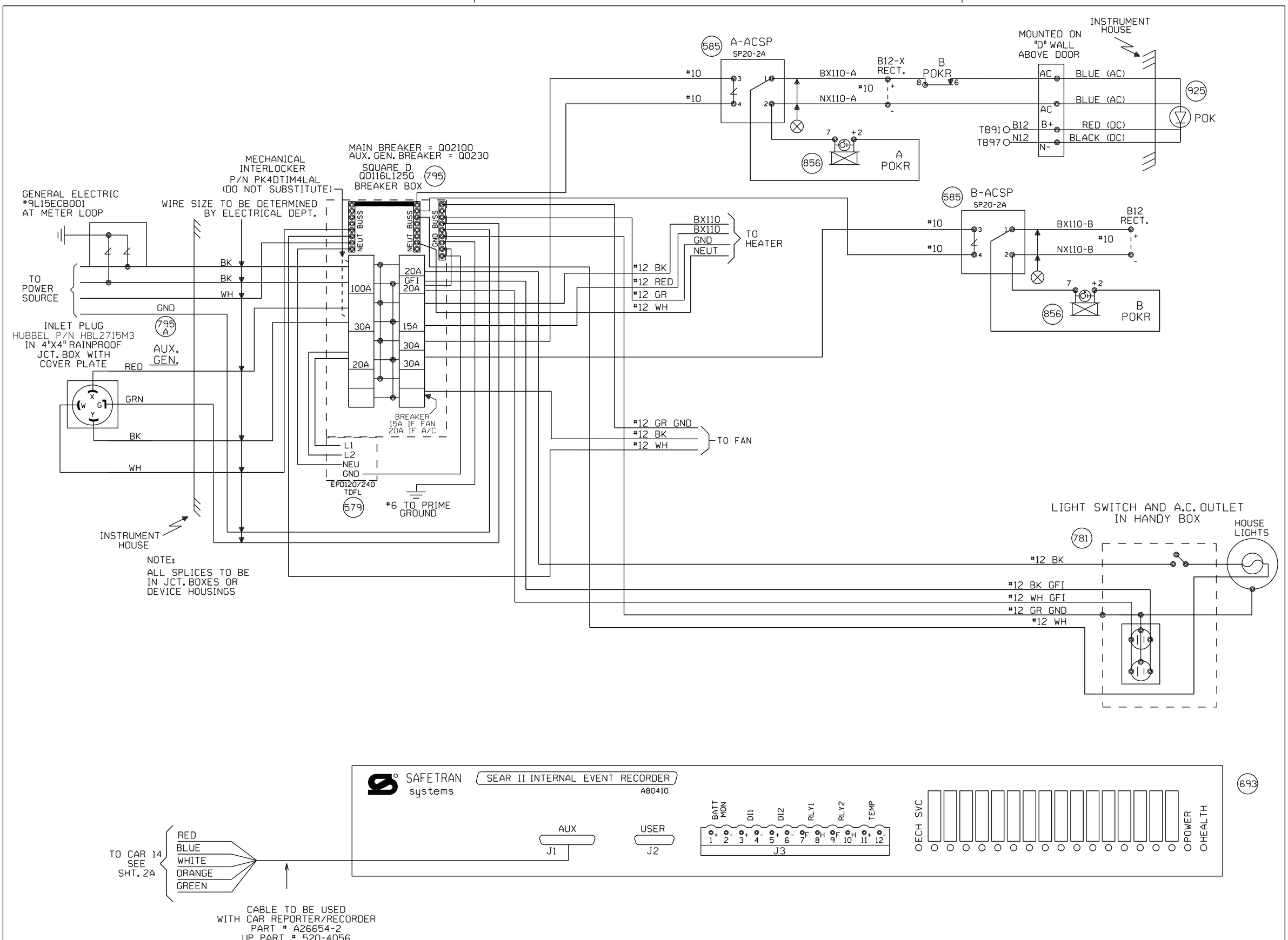

NEW SHEET

Designed: 12/29/15 INSTALL NEW CABIN, GATES, AND FLASHERS AIRFLITE ROAD M.P.1.39 Rec#: WO#: 31926 IS: /EJH / /ATG/JVJ	MODIFICATION LEVEL		CIRCUIT MODIFICATIONS ARE NOT TO BE MADE WITHOUT AUTHORITY FROM THE OFFICE OF SIGNAL DESIGN	Date: 12/17/15 Des: ATG Chk: EJH AFE: 31926	UNION PACIFIC RAILROAD CAHOKIA, IL AIRFLITE ROAD CHESTER SUBDIVISION Office of AVP Engineering - Signal Omaha, Nebraska	Sh.: 2 DOT 424756Y MP: 1.39 ID: 1275139.2X
	Q. A. LAST LEVEL CHECKED	DU				
	LAST LEVEL MOD THIS TYPICAL	DU				
	LAST LEVEL BY DESIGNER	DU				
	CHANGED FROM TYPICAL?	Y				
	REV 01.24.11 4K SEARAC.2					

1275139.2X 2/29/2016 10:57:09 AM

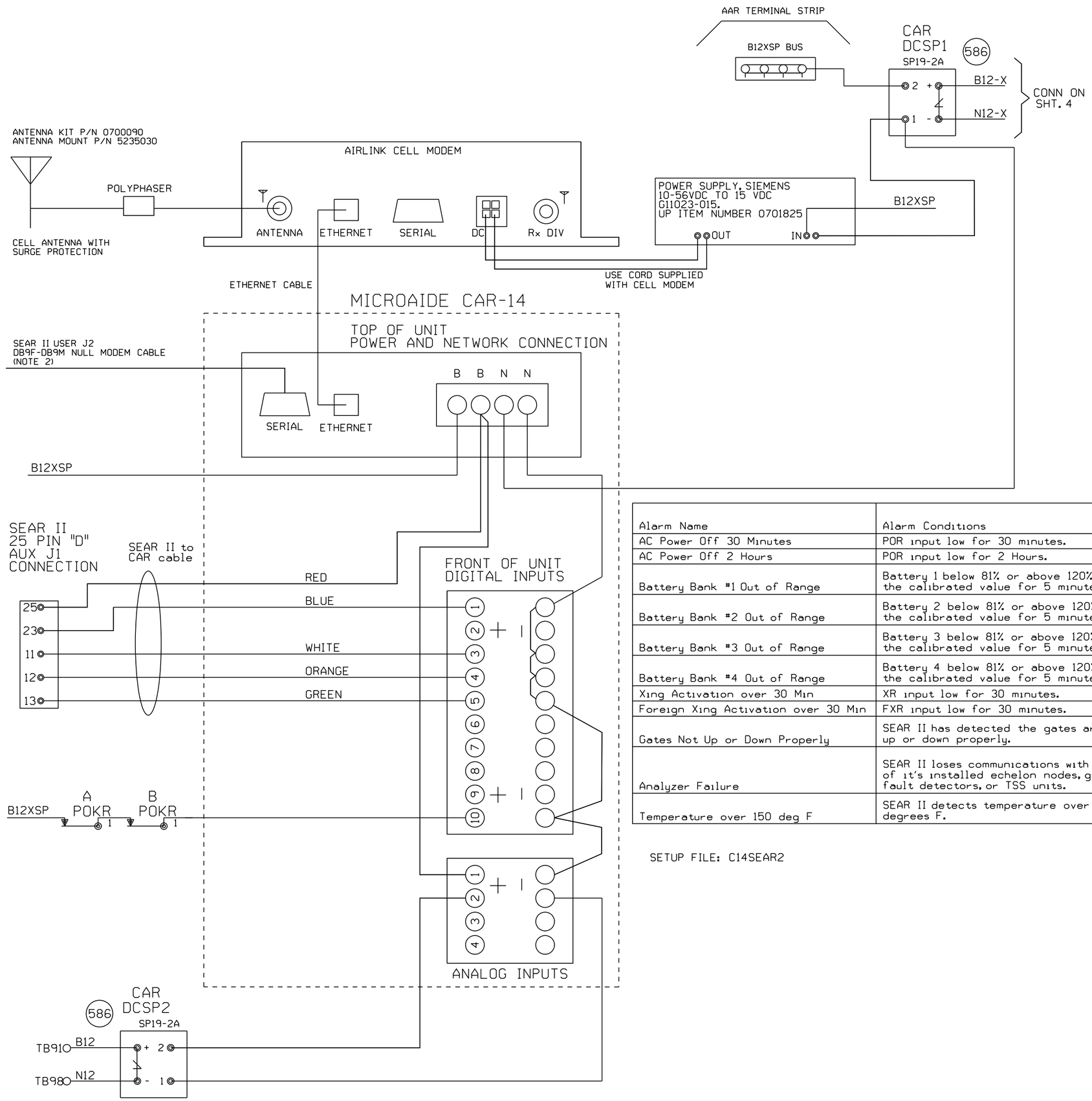

NOTE:
1) DO NOT JUMPER UNUSED INPUTS
2) THE CAR14 SERIAL PORT IS AVAILABLE TO ADD REMOTE CONNECTIVITY TO EXISTING LOGGING EQUIPMENT. USE NULL MODEM CABLE WITH SHIELDING DISCONNECTED AT ONE OR BOTH SIDES.

ANALOG INPUTS:
A1) B12X BATTERY BANK
A2) B12 BATTERY BANK
A3) BATTERY BANK 3
A4) BATTERY BANK 4

DIGITAL INPUTS
D1) XR (BLUE WIRE)
D2) FOREIGN XR
D3) ANALYZER FAILURE (WHITE WIRE)
D4) HIGH TEMPERATURE (ORANGE WIRE)
D5) GATES NOT UP OR DOWN PROPERLY (GREEN WIRE)
D10) POWER OFF INDICATION

Alarm Name	Alarm Conditions	Alarm Clearing Conditions	Cleared by Maintainer Mode?
AC Power Off 30 Minutes	POR input low for 30 minutes.	POR input high for 5 minutes.	No
AC Power Off 2 Hours	POR input low for 2 Hours.	POR input high for 5 minutes.	No
Battery Bank #1 Out of Range	Battery 1 below 81% or above 120% of the calibrated value for 5 minutes.	Battery 1 within acceptable range for 5 minutes.	No
Battery Bank #2 Out of Range	Battery 2 below 81% or above 120% of the calibrated value for 5 minutes.	Battery 2 within acceptable range for 5 minutes.	No
Battery Bank #3 Out of Range	Battery 3 below 81% or above 120% of the calibrated value for 5 minutes.	Battery 3 within acceptable range for 5 minutes.	No
Battery Bank #4 Out of Range	Battery 4 below 81% or above 120% of the calibrated value for 5 minutes.	Battery 4 within acceptable range for 5 minutes.	No
Xing Activation over 30 Min	XR input low for 30 minutes.	XR input high for 10 seconds.	Yes
Foreign Xing Activation over 30 Min	FXR input low for 30 minutes.	FXR input high for 10 seconds.	Yes
Gates Not Up or Down Properly	SEAR II has detected the gates are not up or down properly.	SEAR II has detected the gates are up or down properly.	No
Analyzer Failure	SEAR II loses communications with any of it's installed echelon nodes, ground fault detectors, or TSS units.	SEAR II has recovered after an analyzer failure alarm.	No
Temperature over 150 deg F	SEAR II detects temperature over 150 degrees F.	SEAR II sensor detects temperature is OK after a High-Temp alarm.	No

SETUP FILE: C14SEAR2

NEW SHEET

Designed: 12/29/15
INSTALL NEW CABIN, GATES, AND FLASHERS AIRFLITE ROAD M.P.1.39
Rec#: WO#: 31926
IS: / /EJH /ATG/JVJ

MODIFICATION LEVEL	
Q.A. LAST LEVEL CHECKED	DU
LAST LEVEL MOD THIS TYPICAL	DU
LAST LEVEL BY DESIGNER	DU
CHANGED FROM TYPICAL?	N

REV 01.24.11 4K ACDCCAR14SII.3

CIRCUIT MODIFICATIONS ARE NOT TO BE MADE WITHOUT AUTHORITY FROM THE OFFICE OF SIGNAL DESIGN

Date: 12/17/15
Des: ATG
Chk: EJH
AFE: 31926

UNION PACIFIC RAILROAD
CAHOKIA, IL
AIRFLITE ROAD
CHESTER SUBDIVISION
Office of AVP Engineering - Signal Omaha, Nebraska

Sh.: 2A
DOT 424756Y
MP: 1.39
ID: 1275139.2AX

1275139.2AX 2/29/2016 10:57:07 AM

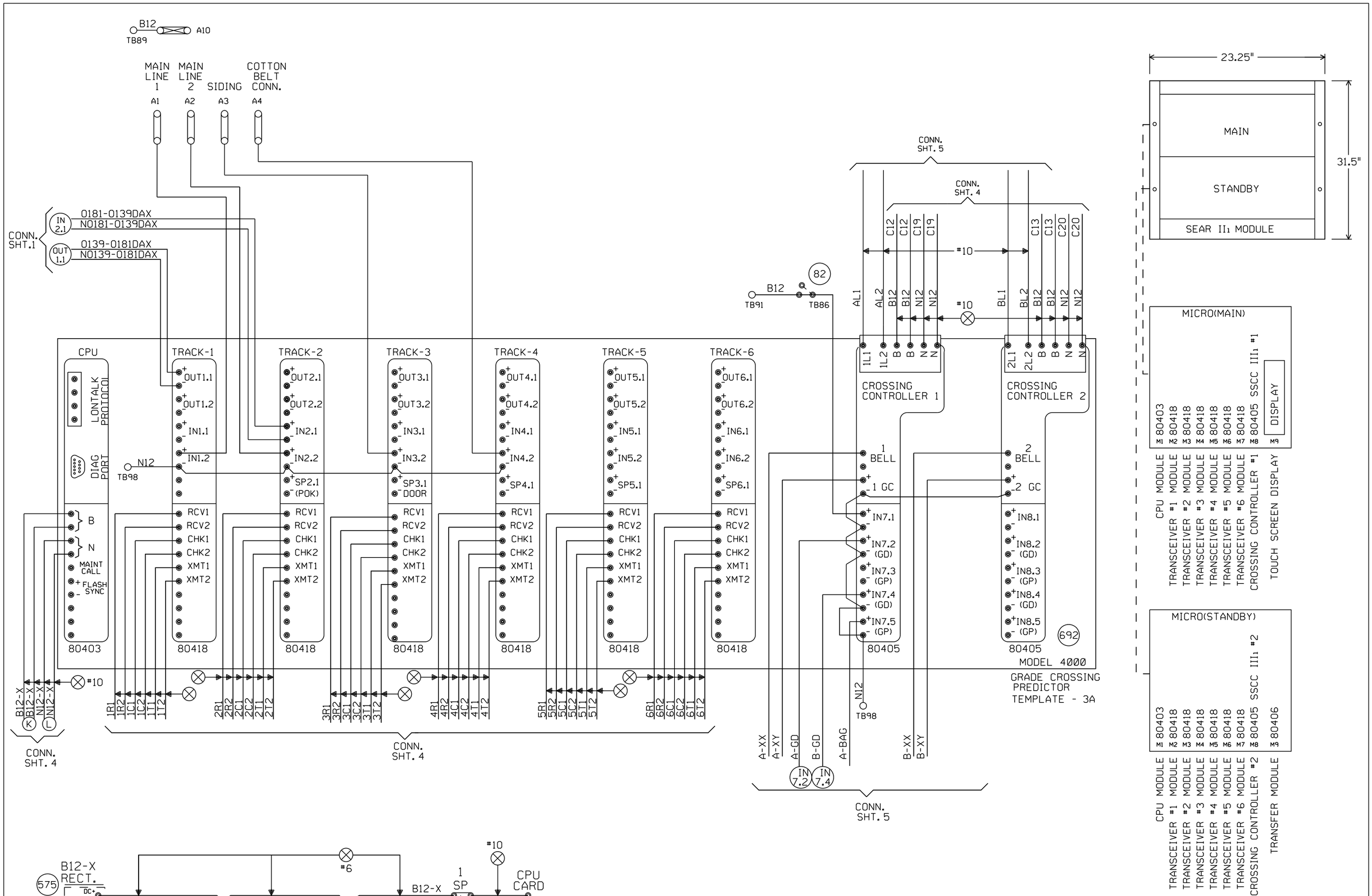

"Mf" FREQUENCY (HZ)	MAXIMUM TRANSMIT WIRE LENGTH (FEET)
86	100
114	125
156	150
211	200
285-970	250

NOTE:
EACH TRANSMITTER TO RAIL WIRE FROM XMT1 AND XMT2 MUST NOT EXCEED THE MAXIMUM LENGTH SPECIFIED IN THE TABLE SHOWN. THE RECEIVER WIRE LENGTH IS NOT CRITICAL. DOES NOT APPLY TO 6 TRACK WIRE APPLICATION.

NEW SHEET

Designed: 12/29/15
INSTALL NEW CABIN, GATES, AND FLASHERS AIRFLITE ROAD M.P.1.39
Rec#: WO#: 31926
IS: /EJH
/ATG/JVJ

MODIFICATION LEVEL	
O. A. LAST LEVEL CHECKED	DU
LAST LEVEL MOD THIS TYPICAL	DU
LAST LEVEL BY DESIGNER	DU
CHANGED FROM TYPICAL?	Y

REV 01.24.11 4K 4TKB4GF.3

CIRCUIT MODIFICATIONS ARE NOT TO BE MADE WITHOUT AUTHORITY FROM THE OFFICE OF SIGNAL DESIGN

Date: 12/17/15
Des: ATG
Chk: EJH
AFE: 31926

UNION PACIFIC RAILROAD

CAHOKIA, IL
AIRFLITE ROAD
CHESTER SUBDIVISION

Office of AVP Engineering - Signal — Omaha, Nebraska

Sh.: 3
DOT 424756Y
MP: 1.39
ID: 1275139.3X

1275139.3X 2/29/2016 10:57:11 AM

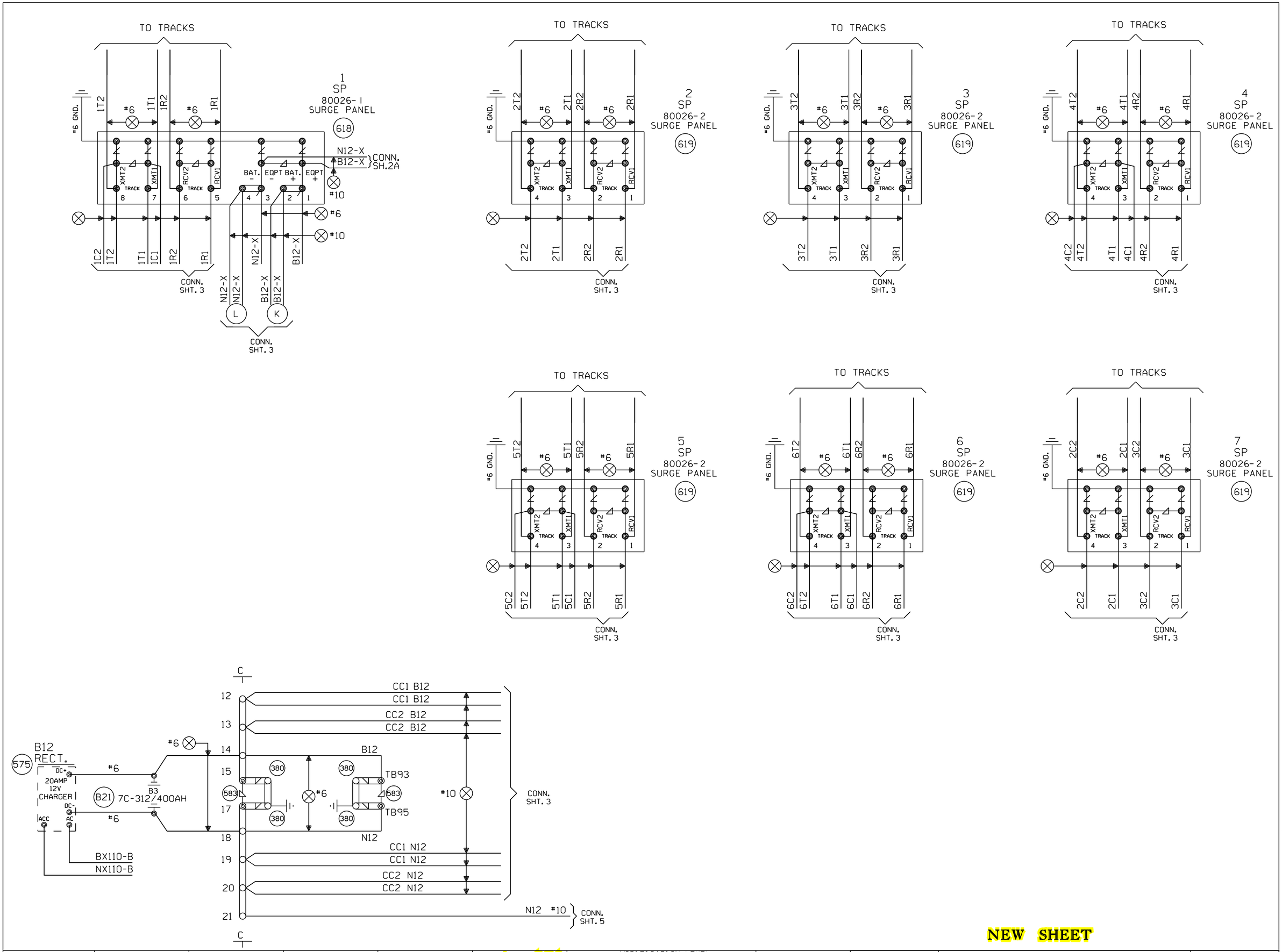

NEW SHEET

Designed: 12/29/15 INSTALL NEW CABIN, GATES, AND FLASHERS AIRFLITE ROAD M.P.1.39 Rec#: IS: WO#: 31926 /EJH /ATG/JVJ	MODIFICATION LEVEL		CIRCUIT MODIFICATIONS ARE NOT TO BE MADE WITHOUT AUTHORITY FROM THE OFFICE OF SIGNAL DESIGN	Date: 12/17/15 Des: ATG Chk: EJH AFE: 31926	UNION PACIFIC RAILROAD CAHOKIA, IL AIRFLITE ROAD CHESTER SUBDIVISION Office of AVP Engineering - Signal Omaha, Nebraska	Sh.: 4 DOT 424756Y MP: 1.39 ID: 1275139.4X
	Q.A. LAST LEVEL CHECKED	DU				
	LAST LEVEL MOD THIS TYPICAL	DU				
	LAST LEVEL BY DESIGNER	DU				
	CHANGED FROM TYPICAL?	Y				
	REV 01.24.11 4K 4TKSPGFC.4					

1275139.4X 2/29/2016 10:57:13 AM

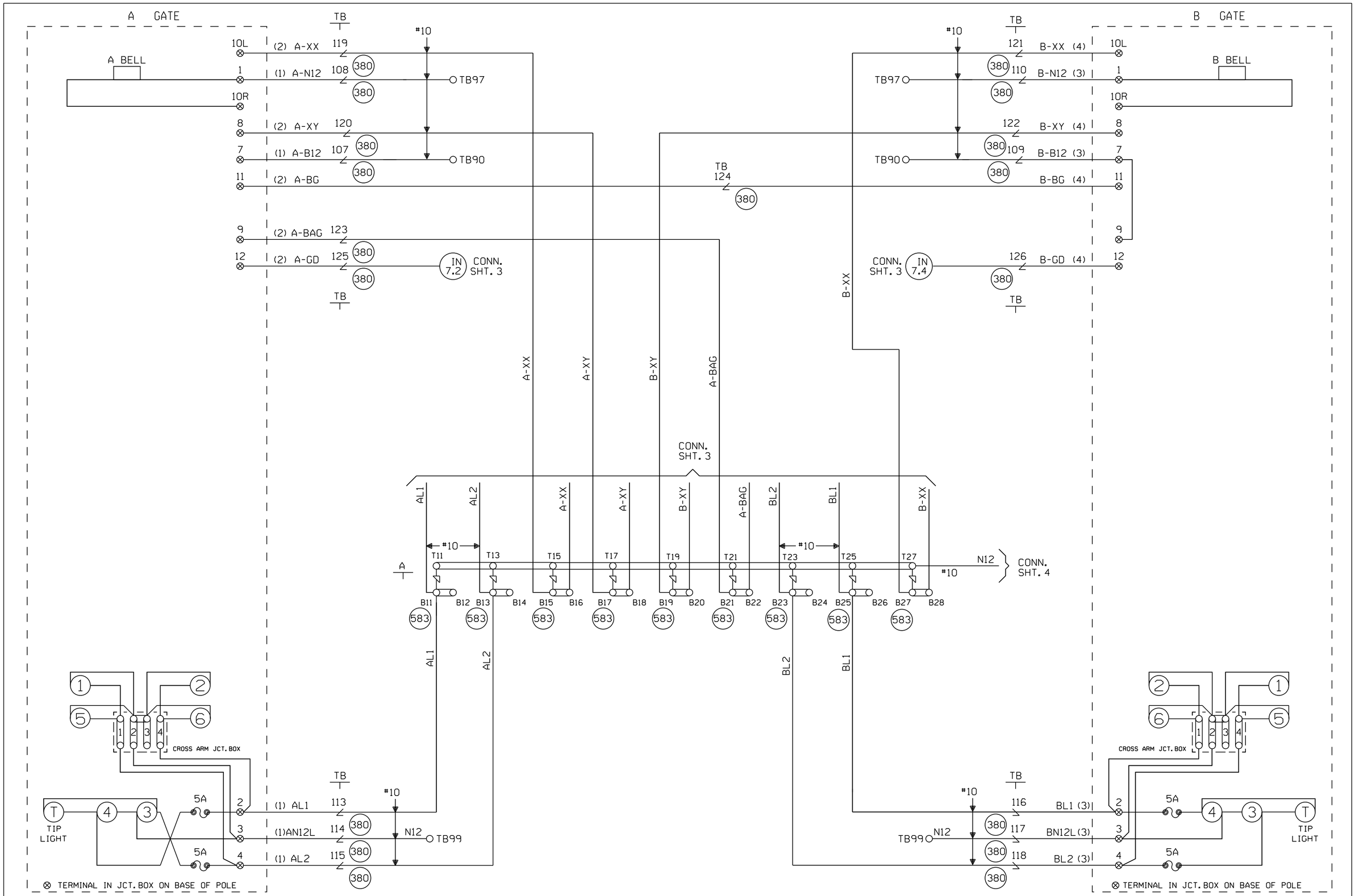

CABLE TABULATION

CABLE NO. 1 5C. NO.6 U.G.B.T. TO GATE A
CABLE NO. 2 7C. NO.14 U.G.B.T. TO GATE A
CABLE NO. 3 5C. NO.6 U.G.B.T. TO GATE B
CABLE NO. 4 7C. NO.14 U.G.B.T. TO GATE B

NEW SHEET

Designed: 12/29/15
INSTALL NEW CABIN, GATES, AND FLASHERS AIRFLITE ROAD M.P.1.39
Rec*: IS:
WO*: 31926 /EJH /ATG/JVJ

MODIFICATION LEVEL	
O. A. LAST LEVEL CHECKED	DU
LAST LEVEL MOD THIS TYPICAL	DU
LAST LEVEL BY DESIGNER	DU
CHANGED FROM TYPICAL?	Y

REV 01.24.11 4K GFCTYP.5

CIRCUIT MODIFICATIONS ARE NOT TO BE MADE WITHOUT AUTHORITY FROM THE OFFICE OF SIGNAL DESIGN

Date: 12/17/15
Des: ATG
Chk: EJH
AFE: 31926

UNION PACIFIC RAILROAD
CAHOKIA, IL
AIRFLITE ROAD
CHESTER SUBDIVISION
Office of AVP Engineering - Signal Omaha, Nebraska

Sh.: 5
DOT 424756Y
MP: 1.39
ID: 1275139.5X

1275139.5X 2/29/2016 10:57:15 AM

WCH 3593-E

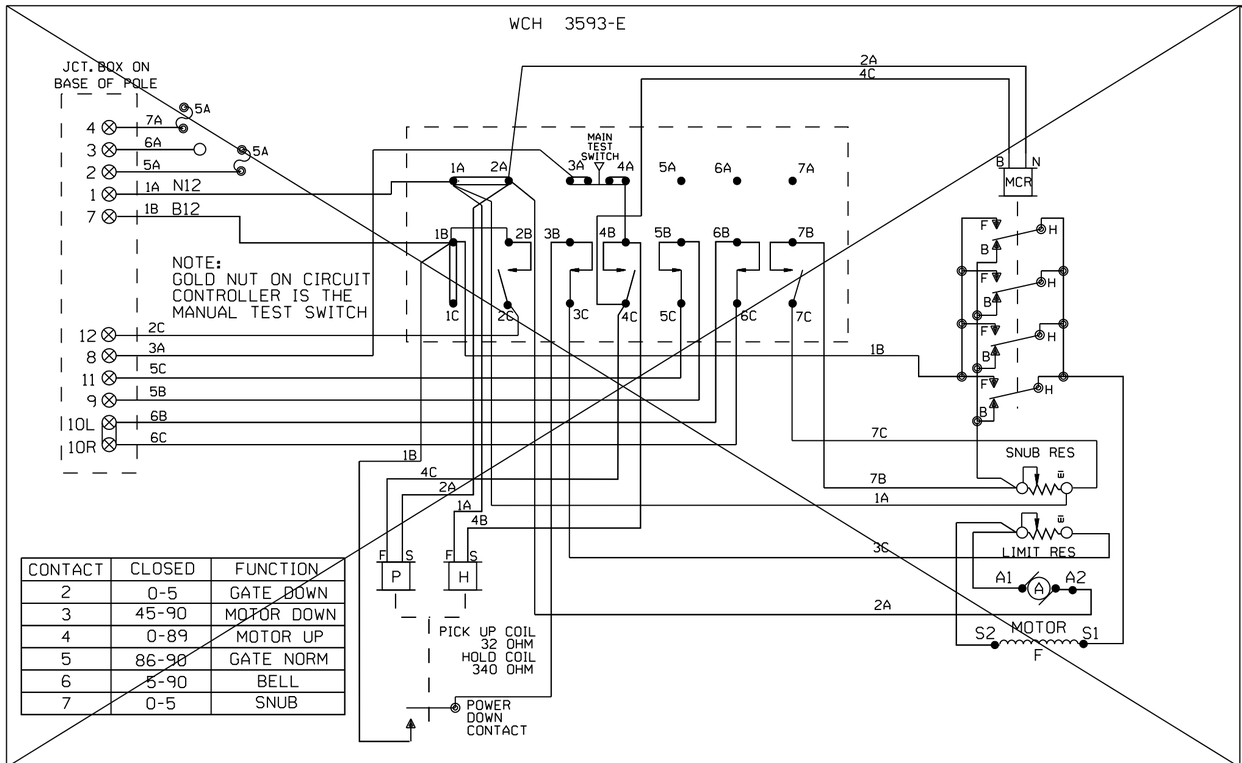

CONTACT	CLOSED	FUNCTION
2	0-5	GATE DOWN
3	45-90	MOTOR DOWN
4	0-89	MOTOR UP
5	86-90	GATE NORM
6	5-90	BELL
7	0-5	SNUB

WCH 3597-E

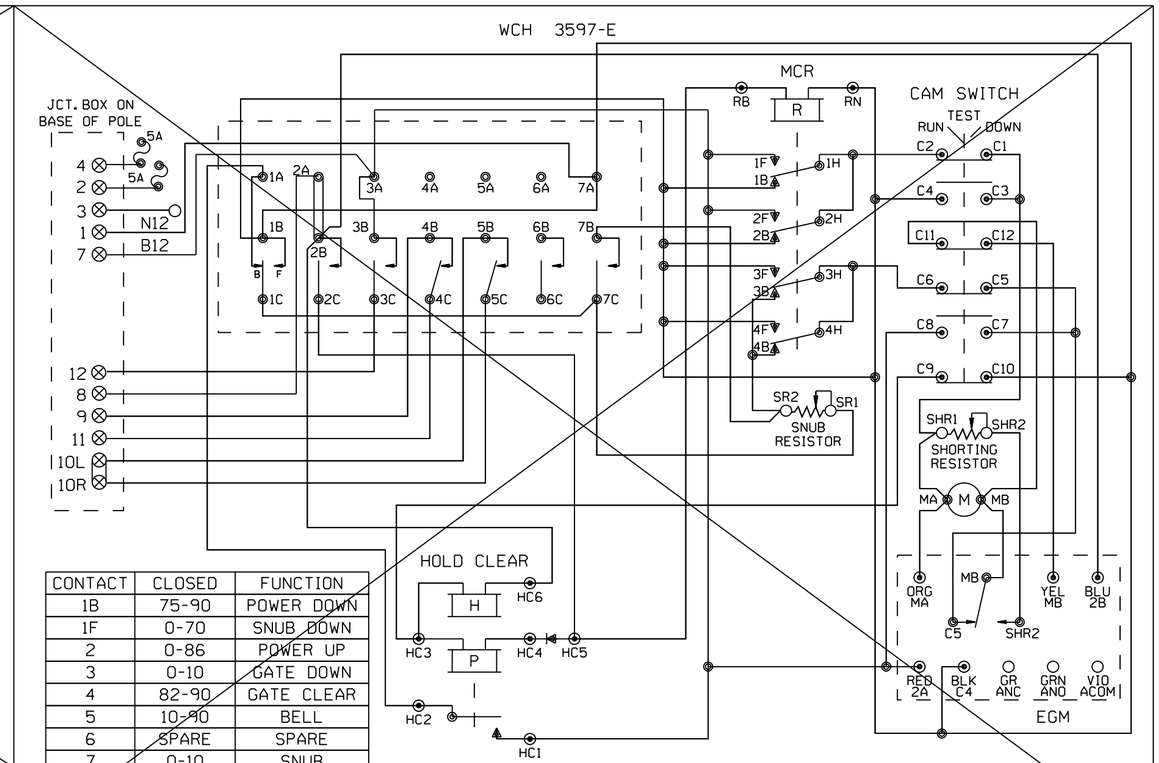

CONTACT	CLOSED	FUNCTION
1B	75-90	POWER DOWN
1F	0-70	SNUB DOWN
2	0-86	POWER UP
3	0-10	GATE DOWN
4	82-90	GATE CLEAR
5	10-90	BELL
6	SPARE	SPARE
7	0-10	SNUB

WCH 3597-RB

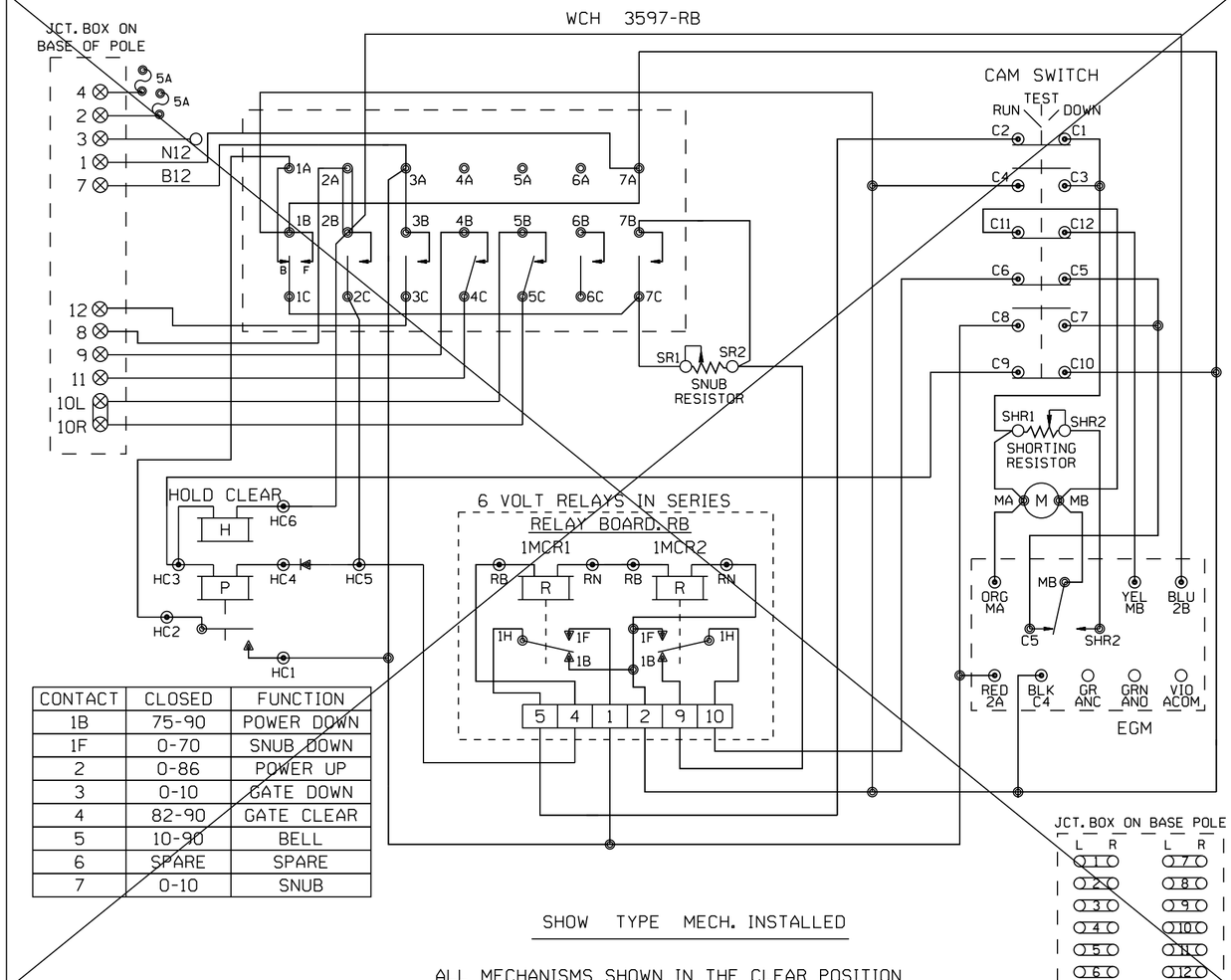

CONTACT	CLOSED	FUNCTION
1B	75-90	POWER DOWN
1F	0-70	SNUB DOWN
2	0-86	POWER UP
3	0-10	GATE DOWN
4	82-90	GATE CLEAR
5	10-90	BELL
6	SPARE	SPARE
7	0-10	SNUB

SHOW TYPE MECH. INSTALLED

ALL MECHANISMS SHOWN IN THE CLEAR POSITION

SAFETRAN S-60

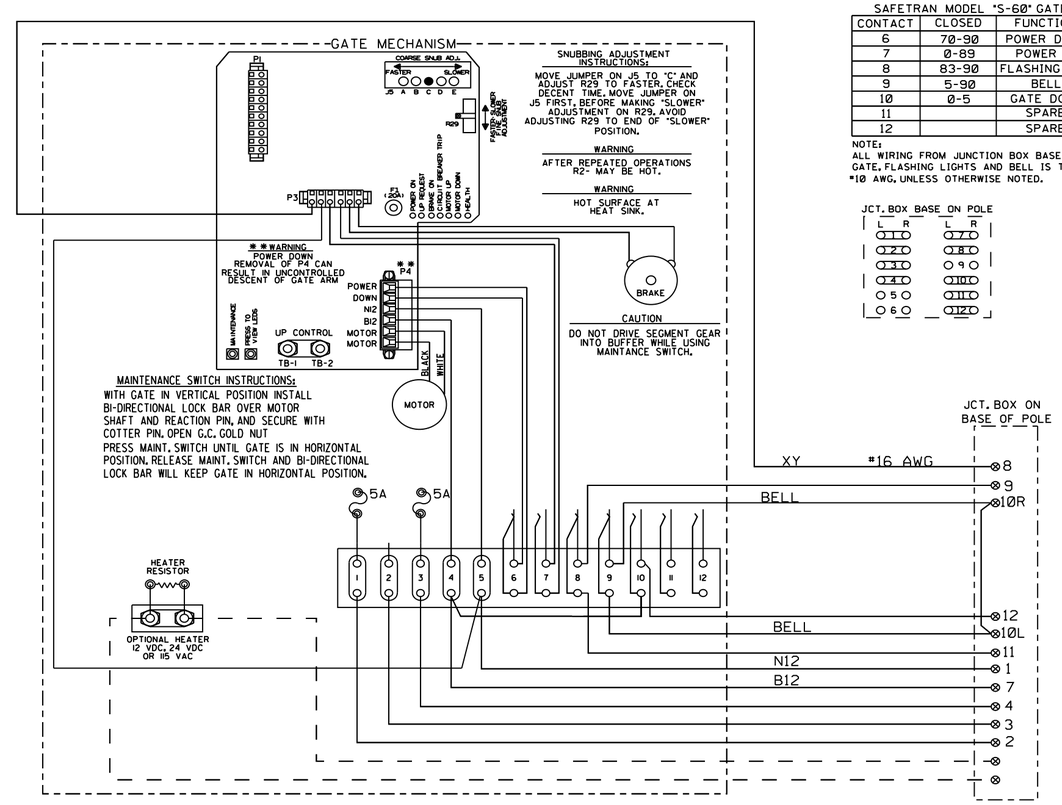

SAFETRAN MODEL "S-60" GATE

CONTACT	CLOSED	FUNCTION
6	70-90	POWER DOWN
7	0-89	POWER UP
8	83-90	FLASHING LGT.
9	5-90	BELL
10	0-5	GATE DOWN
11		SPARE
12		SPARE

NOTE:
ALL WIRING FROM JUNCTION BOX BASE TO GATE, FLASHING LIGHTS AND BELL IS TO BE #10 AWG, UNLESS OTHERWISE NOTED.

JCT. BOX BASE ON POLE

FOR WIRING GATES "A" & "B"

NEW SHEET

Designed: 12/29/15

INSTALL NEW CABIN, GATES, AND FLASHERS AIRFLITE ROAD M.P.1.39

Rec#: WO#: 31926
IS: /EJH /ATG/JVJ

MODIFICATION LEVEL	
O.A. LAST LEVEL CHECKED	DU
LAST LEVEL MOD THIS TYPICAL	DU
LAST LEVEL BY DESIGNER	DU
CHANGED FROM TYPICAL?	N

REV 01.24.11 4K GWIRING.7

CIRCUIT MODIFICATIONS ARE NOT TO BE MADE WITHOUT AUTHORITY FROM THE OFFICE OF SIGNAL DESIGN

Date: 12/17/15
Des: ATG
Chk: EJH
AFE: 31926

UNION PACIFIC RAILROAD

CAHOKIA, IL
AIRFLITE ROAD
CHESTER SUBDIVISION

Office of AVP Engineering - Signal — Omaha, Nebraska

Sh.: 6
DOT 424756Y
MP: 1.39
ID: 1275139.6X

1275139.6X 2/29/2016 10:57:17 AM

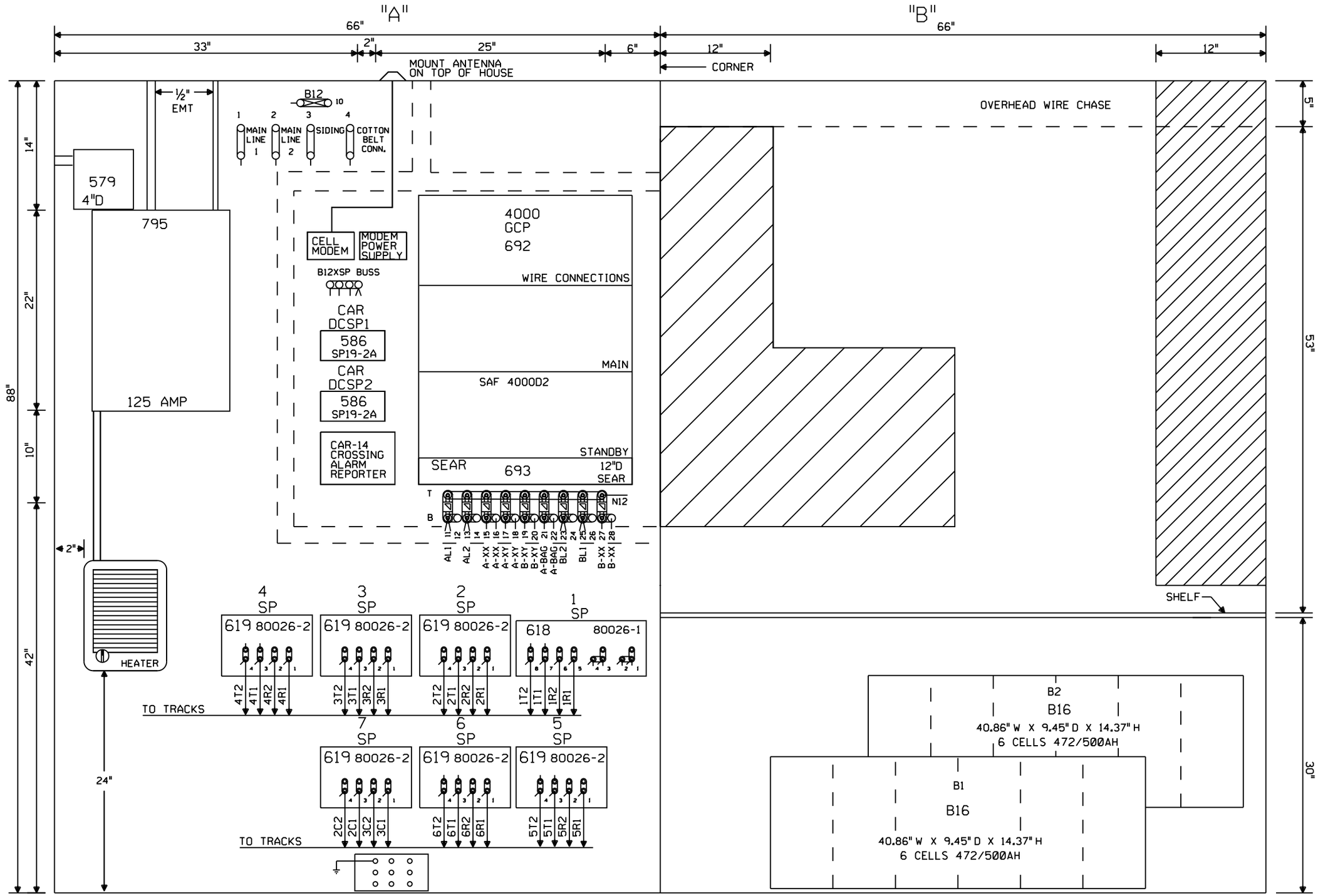

6X6 WAYSIDE/XING HOUSE WITH BLOWER U.P. PART#520-????

NOTE: ALL DIMENSIONS SHOWN ARE APPROXIMATE.

NEW SHEET

Designed: 12/29/15
INSTALL NEW CABIN, GATES, AND FLASHERS AIRFLITE ROAD M.P.1.39
Rec#: 15:
WO#: 31926 /EJH /ATG/JVJ

MODIFICATION LEVEL	
O.A. LAST LEVEL CHECKED	DU
LAST LEVEL MOD THIS TYPICAL	DU
LAST LEVEL BY DESIGNER	DU
CHANGED FROM TYPICAL?	Y

REV 01.24.11 4K 4TKGFC.8

CIRCUIT MODIFICATIONS ARE NOT TO BE MADE WITHOUT AUTHORITY FROM THE OFFICE OF SIGNAL DESIGN

Date: 12/17/15
Des: ATG
Chk: EJH
AFE: 31926

UNION PACIFIC RAILROAD
CAHOKIA, IL
AIRFLITE ROAD
CHESTER SUBDIVISION
Office of AVP Engineering - Signal Omaha, Nebraska

Sh.: 7
DOT 424756Y
MP: 1.39
ID: 1275139.7X

1275139.7X 2/29/2016 10:57:19 AM

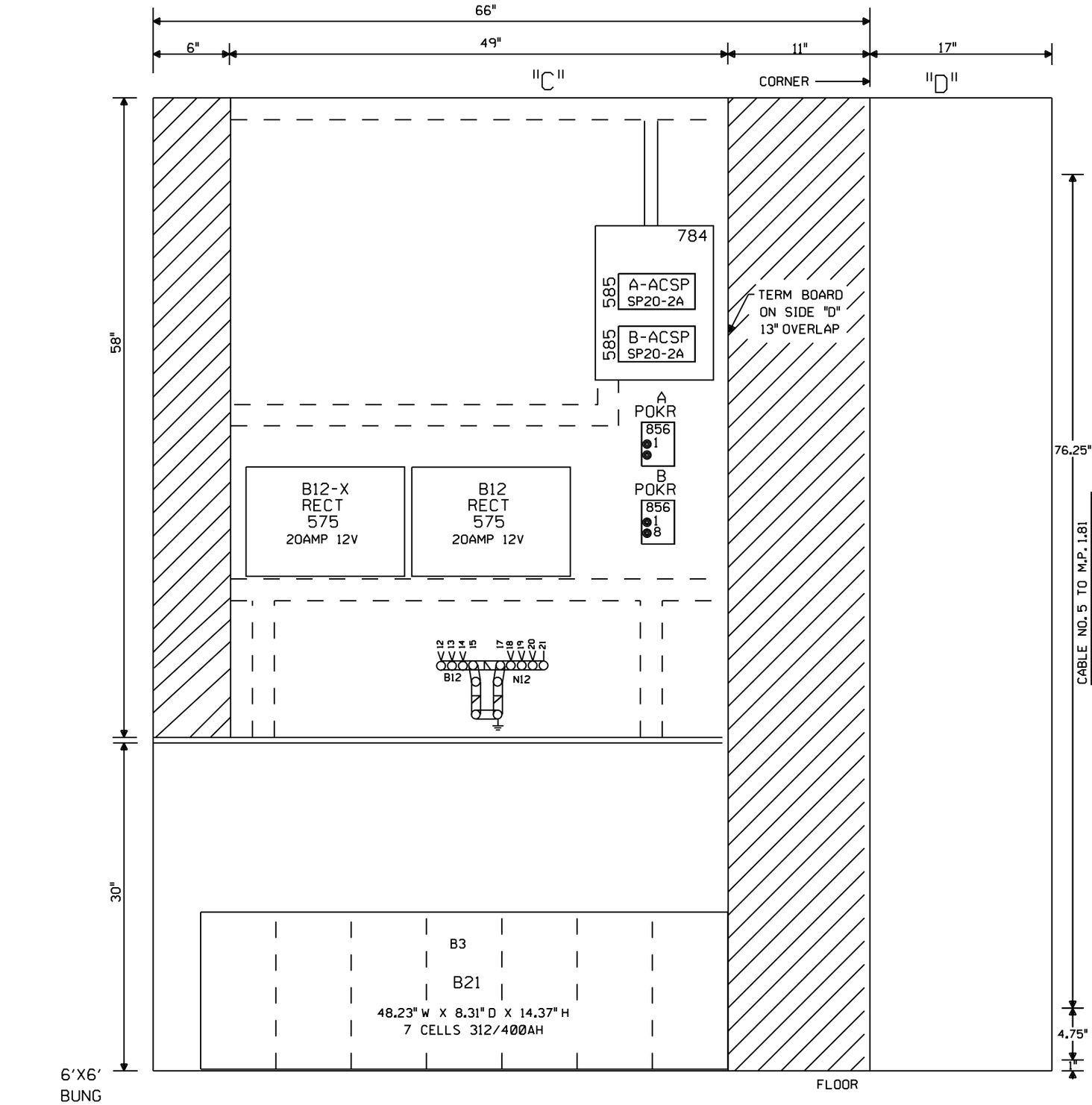

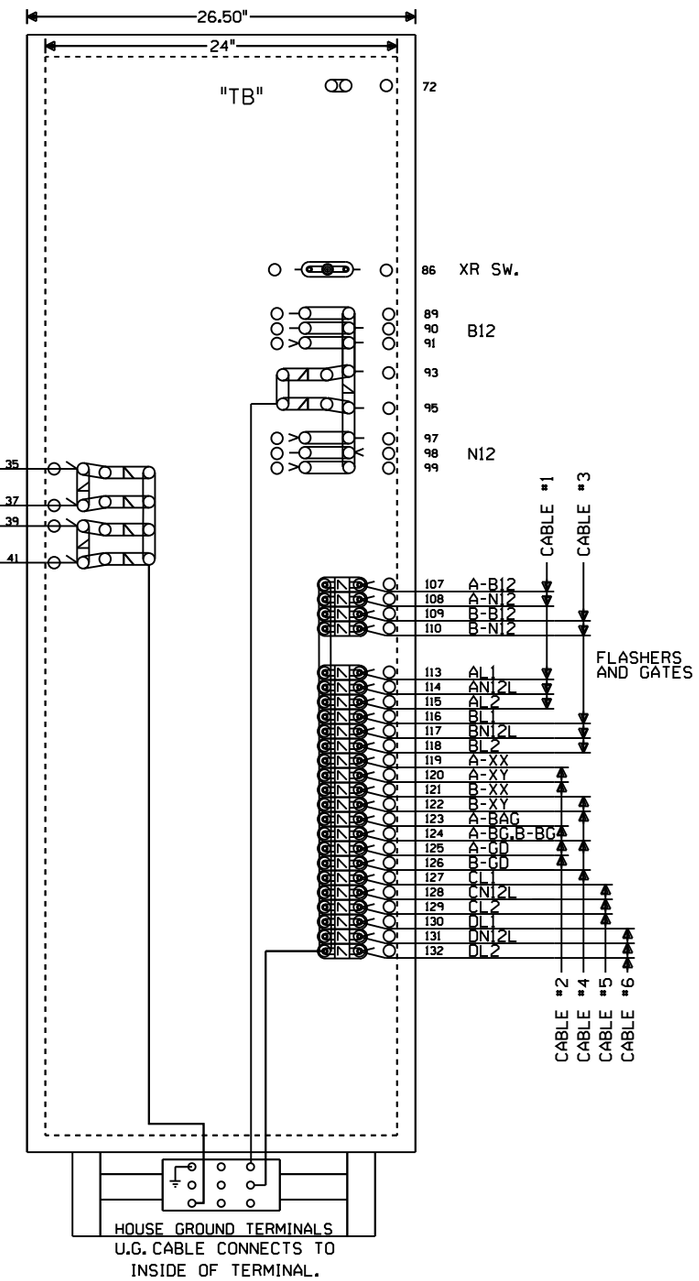

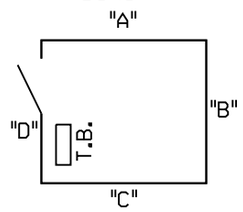

NOTE: NO TEST LINKS TO BE INSTALLED WITH CROSSING LIGHTING OR GATE MECH CIRCUITRY

NOTE: ALL DIMENSIONS SHOWN ARE APPROXIMATE.

NEW SHEET

Designed: 12/29/15
INSTALL NEW CABIN, GATES, AND FLASHERS AIRFLITE ROAD M.P.1.39
Rec#: 15:
WO#: 31926 /EJH /ATG/JVJ

MODIFICATION LEVEL	
O. A. LAST LEVEL CHECKED	DU
LAST LEVEL MOD THIS TYPICAL	DU
LAST LEVEL BY DESIGNER	DU
CHANGED FROM TYPICAL?	Y

REV 01.24.11 4K GFC.9

CIRCUIT MODIFICATIONS ARE NOT TO BE MADE WITHOUT AUTHORITY FROM THE OFFICE OF SIGNAL DESIGN

Date: 12/17/15
Des: ATG
Chk: EJH
AFE: 31926

UNION PACIFIC RAILROAD
CAHOKIA, IL
AIRFLITE ROAD
CHESTER SUBDIVISION
Office of AVP Engineering - Signal Omaha, Nebraska

Sh.: 8
DOT 424756Y
MP: 1.39
ID: 1275139.8X

1275139.8X 2/29/2016 10:57:21 AM