ITCS HIGH SPEED WARNING TIME 93 SECONDS
PRIME WARNING TIME = 45 SECONDS

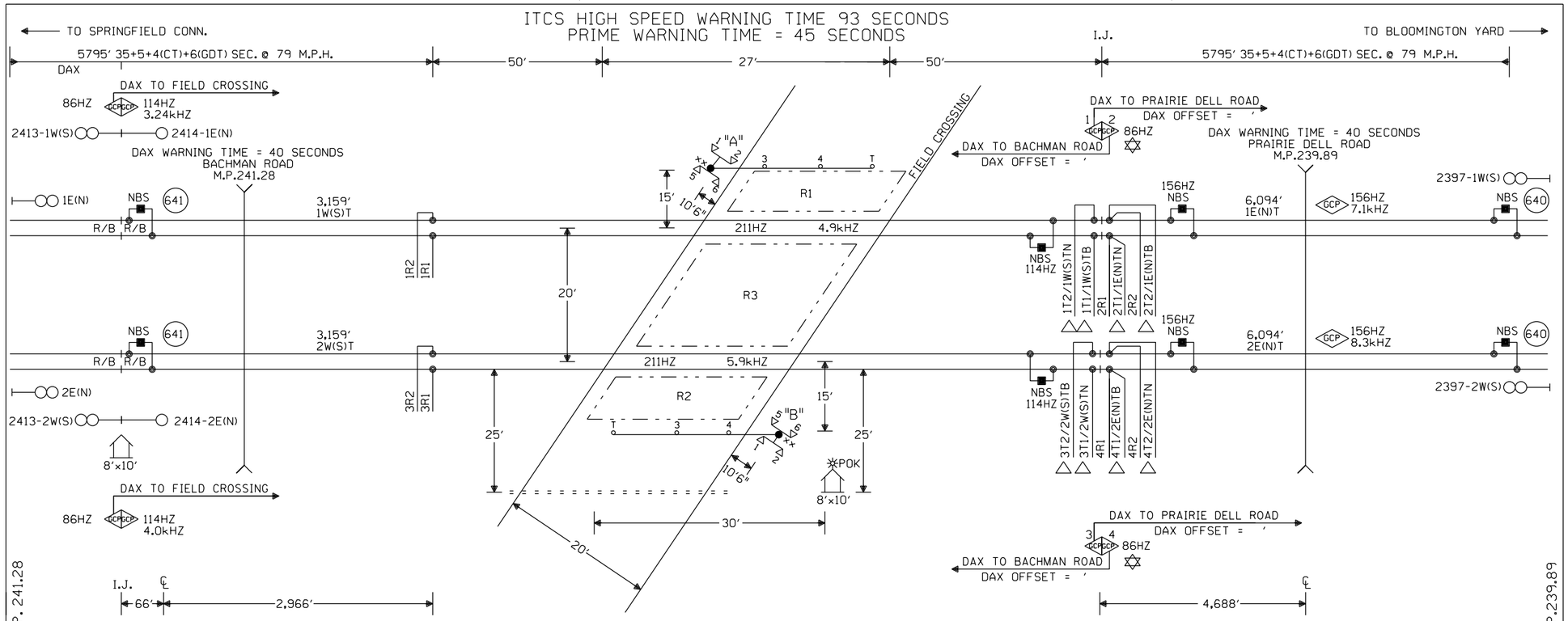

NOTES:

⊗ = TWISTED WIRES
INSULATED 1 TWIST PER FT.
ALL TRACK WIRES 2C. #6

TRANSMITTER AND RECEIVER LEADS TO BE SEPARATED BY AT LEAST 12" IN TRENCH, LENGTHS SHOULD NOT EXCEED MANUFACTURES RECOMMENDATION.

TOP OF FOUNDATION TO BE AT SAME ELEVATION AS THE SURFACE OF THE TRAVELED WAY & NO MORE THAN 4" ABOVE THE SURFACE OF THE GROUND.

ALL BUNGALOW WIRING TO BE #16 AWG FLEX UNLESS OTHERWISE SPECIFIED EXCEPT ALL GROUND WIRE TO BE #6 AWG FLEX OR LARGER.

ALL WIRING IN GATE MECHANISM TO BE #10 "AWG FLEX".

REFER TO UP STANDARD DWG FOR BUNGALOW GROUNDING.

PORTABLE GENERATOR EXTENSION CORD FOR 240V TO 240V IS PROVIDED AS WELL AS A 120V TO 240V ADAPTER.

ALL LIGHTS TO BE 12" ROUNDELS.

= = = = = = 4" X 50' CONDUIT

LIGHTS: LED LIGHTS

GATE A: 30'
GATE B: 30'

xx = BELL

✡ = GCP TO OPERATE IN SEMI-BI DIRECTIONAL MODE. USE TAB 627 COUPLER.

△ = ENSURE TRACK POLARITY IS TRANSPOSED ACROSS ALL INSULATED JOINTS.

GDT = GATE DELAY TIME

CONSTRUCTION NOTE:

1. CABIN LOCATION NEEDS TO BE VERIFIED BY ICC PERSONNEL.
2. WHEN PLACING THE HOUSE THE 10' OR LONG SIDE OF THE HOUSE NEEDS TO BE PARALLEL WITH THE TRACKS.
3. ADD EXTENSION ARMS TO THE FLASHERS ALLOWING CLEARANCE FOR THE GATE ARM WHEN IN THE VERTICAL POSITION.
4. TRACK 1 SIGNALS AND TRACK CONNECTIONS WILL BE INSTALLED IN PHASE 1, BUT NOT PUT IN SERVICE UNTIL PHASE 2.

U-1400 LOOP LOCATION:

1.) 12" FROM CONCRETE CROSSING PANEL. MAY VARY FROM 6" TO 12" DEPENDING ON PAVEMENT QUALITY.
2.) 3.5' FROM GATE ARM.
3.) 2' FROM THE EDGE OF THE TRAVELED WAY. MAY BE INCREASED UP TO A MAXIMUM OF 5' WHERE AN IMPROVED SHOULDER OR OTHER EXISTS.
4.) MAXIMUM LOOP WIDTH NOT TO EXCEED 8' AND MINIMUM WIDTH TYPICALLY NOT TO BE LESS THAN 5'. LOOPS BETWEEN TRACKS MUST NOT BE LESS THAN 3'. HOWEVER SMALLER LOOPS ARE ACCEPTABLE.
5.) MAXIMUM LOOP AREA NOT TO EXCEED 144 SQUARE FEET.
6.) MAXIMUM LENGTH OF THE LONGEST SIDE OF A LOOP SHALL NOT EXCEED 28'6".

— — = U-1400 LOOP

W(S) ←—○—→ E(N)

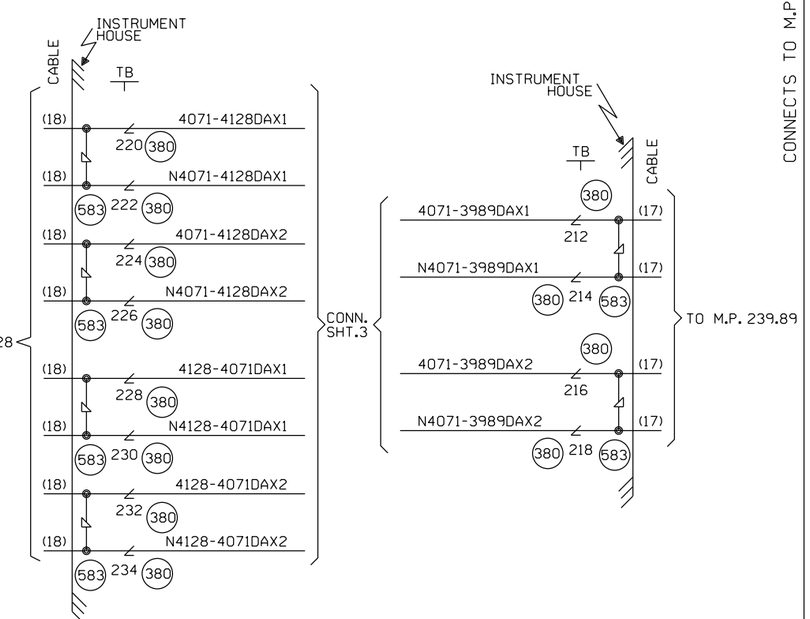

CABLE TABULATION

CABLE #17 7C#14 U.G.B.T. HOUSE TO M.P. 239.89
CABLE #18 12C#14 U.G.B.T. HOUSE TO M.P. 241.28

NEW SHEET

Designed: 09/27/12 TIER IS PHASE 1 M.P. 239.70 TO M.P. 255.35 TO UPGRADE XING TO 4 QUAD WITH EGMS, VARIOUS C.P.'S Rec#: W0#: 10804 IS: NBT / / NST/MJF	MODIFICATION LEVEL O. A. LAST LEVEL CHECKED — DU LAST LEVEL MOD THIS TYPICAL — DU LAST LEVEL BY DESIGNER — DU CHANGED FROM TYPICAL? — Y REV 01.24.11 4K 2TKEGMS.1	CIRCUIT MODIFICATIONS ARE NOT TO BE MADE WITHOUT AUTHORITY FROM THE OFFICE OF SIGNAL DESIGN	Date: 09/27/12 Des: NST Chk: NBT AFE: 10804	UNION PACIFIC RAILROAD SHIPMAN, ILLINOIS FIELD CROSSING SPRINGFIELD SUBDIVISION Office of AVP Engineering - Signal Omaha, Nebraska	Sh.: 1 DOT 294410K MP: 240.71 ID: CSL24071.1X

The Incremental Train Control System (ITCS) provides advance activation of the crossings for all ITCS equipped trains travleing over 20 M.P.H. The ITCS is a communication-based train control system that provides enforcement and advanced start of public crossings. ITCS vitally monitors the existing crossings as a basis for determining permissible action and uses a radio frequency (RF) data link with a vital communication protocol to send wayside status to the trains. Enforcement of speed limits is performed vitally by an onboard computer (OBC). The wayside components monitor Crossing Warning Systems and relay the information to the train over the RF network as a list of device statuses. The OBC interprets the statuses and enforces all speed limits and braking based upon those statuses. The OBC must receive an acknowledgment from the crossing, verifying the proper operation of the Crossing Warning System, before the train can proceed at high speed through the crossings aprroach circuit. This is the High Speed OK (HSOK) status. If this status is not true, a 79 M.P.H. target speed limit is placed at the start of the conventional track circuit based approach of the crossing.
Conditions that would cause this to happen are:

- The Advance Start Enable test switch is open.
- The Crossing has been activated longer than 3.5 minutes but less than 5 minutes, without a train present on the crossing.
- The loss of communitations longer than 2 minutes 30 seconds.

The most restrictive status in the health status. If the health status for the crossing is not true a 15 M.P.H. target speed limit is placed at the leading island wires of the crossing.
Conditions that would cause this to happen are:

- Activation failure detected. (No vertical gate contact indicating de-energized within 15 seconds of request for crossing to activate)

  If this failure has occurred it requires the advance start enable test switch to be opened to reset the box before any further High Speed operation is allowed.
- The crossing has been activated longer than 5 minutes, without a train present on the crossing.
- The vehicle detector does not indicate clear, or the Gate Down circuit not energized within 20 seconds (Field adjustable) of crossing being requested to activate.
- The vehicle detector health not true. This input consists of the detector loop health, Battery health, and Long Term Occupancy of Vehicle Detector Loop (Greater than 1 minute.)
- If the island circuit drops while the approach circuit remains up, or the island drops either before or simultaneously with the approach circuit.

NEW SHEET

							Designed: 09/27/12 TIER IS PHASE 1 M.P. 239.70 TO M.P. 255.35 TO UPGRADE XING TO 4 QUAD WITH EGMS, VARIOUS C.P.'S Rec#: WO#: 10804 IS: NBT / / / NST/MJF	CIRCUIT MODIFICATIONS ARE NOT TO BE MADE WITHOUT AUTHORITY FROM THE OFFICE OF SIGNAL DESIGN	Date: 09/27/12 Des: NST Chk: NBT AFE: 10804	UNION PACIFIC RAILROAD SHIPMAN, ILLINOIS FIELD CROSSING SPRINGFIELD SUBDIVISION Office of AVP Engineering - Signal Omaha, Nebraska	Sh.: 1A DOT 294410K MP: 240.71 ID: CSL24071.1AX

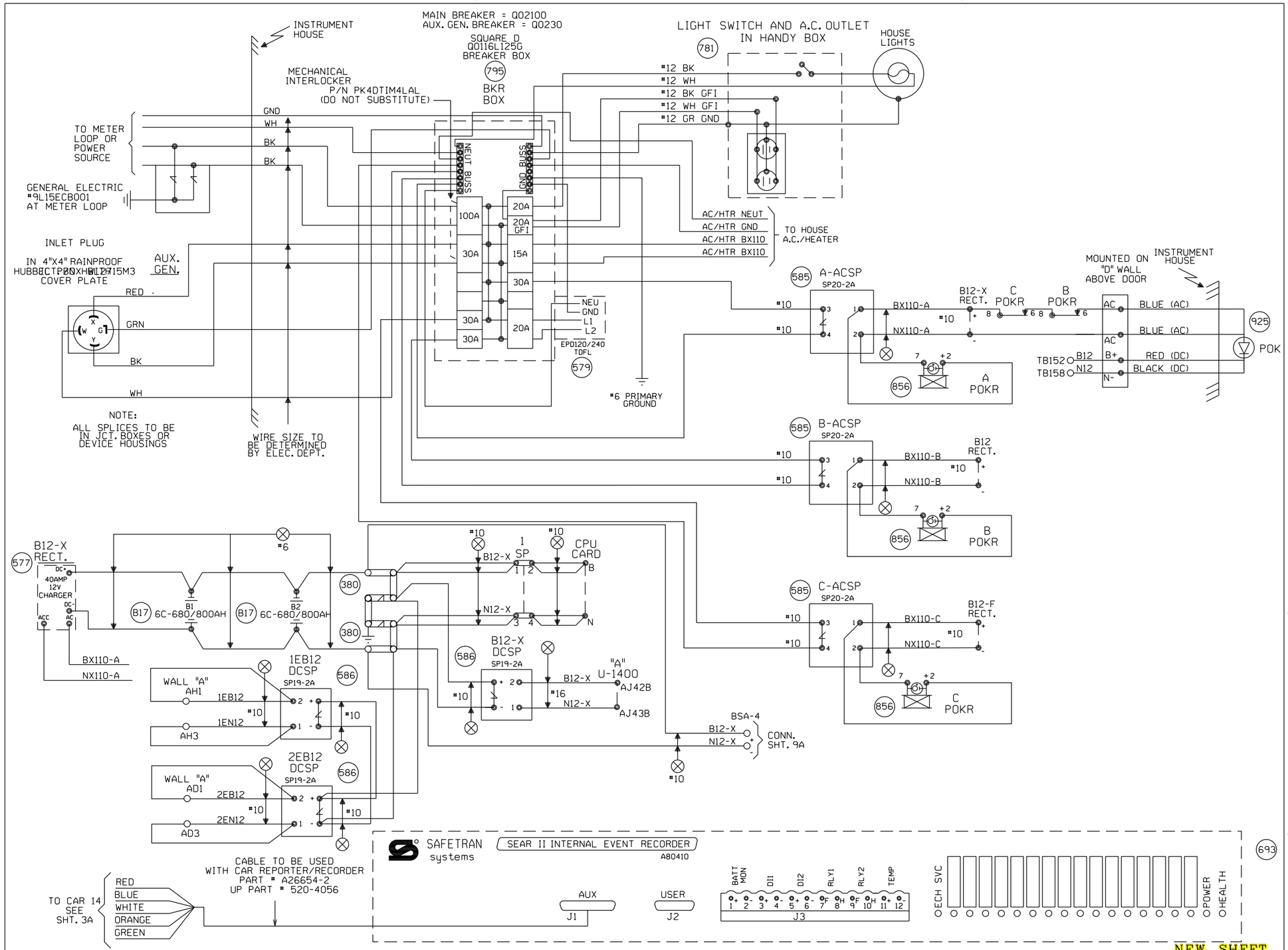

NEW SHEET

Designed: 09/27/12 TIER IS PHASE 1 M.P. 239.70 TO M.P. 255.35 TO UPGRADE XING TO 4 QUAD WITH EGMS, VARIOUS C.P.'S Rec#: WO#: 10804 IS: NBT / / NST/MJF	MODIFICATION LEVEL		CIRCUIT MODIFICATIONS ARE NOT TO BE MADE WITHOUT AUTHORITY FROM THE OFFICE OF SIGNAL DESIGN	Date: 09/27/12 Des: NST Chk: NBT AFE: 10804	UNION PACIFIC RAILROAD SHIPMAN, ILLINOIS FIELD CROSSING SPRINGFIELD SUBDIVISION Office of AVP Engineering - Signal Omaha, Nebraska	Sh.: 2 DOT 294410K MP: 240.71 ID: CSL24071.2X
	O. A. LAST LEVEL CHECKED	DU				
	LAST LEVEL MOD THIS TYPICAL	DU				
	LAST LEVEL BY DESIGNER	DU				
	CHANGED FROM TYPICAL? REV 01.24.11 4K 2TKEGMS.2	Y				

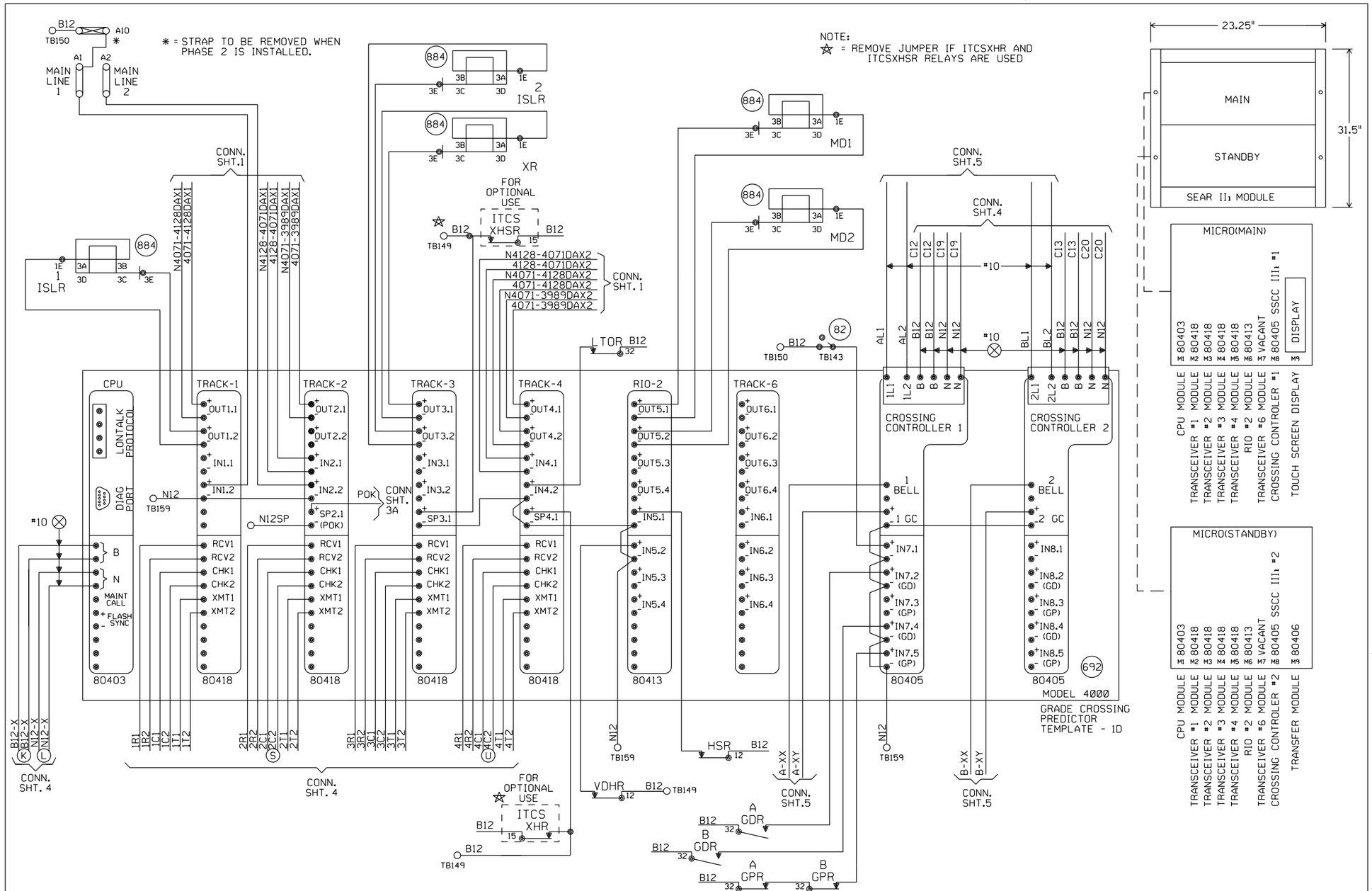

"Mf" FREQUENCY (HZ)	MAXIMUM TRANSMIT WIRE LENGTH (FEET)
86	100
114	125
156	150
211	200
285-970	250

NOTE:
EACH TRANSMITTER TO RAIL WIRE FROM XMT1 AND XMT2 MUST NOT EXCEED THE MAXIMUM LENGTH SPECIFIED IN THE TABLE SHOWN. THE RECEIVER WIRE LENGTH IS NOT CRITICAL. DOES NOT APPLY TO 6 TRACK WIRE APPLICATION.

NEW SHEET

Designed: 09/27/12
TIER IS PHASE 1 M.P. 239.70 TO M.P. 255.35 TO UPGRADE XING TO 4 QUAD WITH EGMS, VARIOUS C.P.'S
Rec*: WO*: 10804
IS: NBT / / / NST/MJF

MODIFICATION LEVEL	
O. A. LAST LEVEL CHECKED	DU
LAST LEVEL MOD THIS TYPICAL	DU
LAST LEVEL BY DESIGNER	DU
CHANGED FROM TYPICAL? REV 01.24.11 4K 2TKEGMS.3	Y

CIRCUIT MODIFICATIONS ARE NOT TO BE MADE WITHOUT AUTHORITY FROM THE OFFICE OF SIGNAL DESIGN

Date: 09/27/12
Des: NST
Chk: NBT
AFE: 10804

UNION PACIFIC RAILROAD

SHIPMAN, ILLINOIS
FIELD CROSSING
SPRINGFIELD SUBDIVISION
Office of AVP Engineering - Signal — Omaha, Nebraska

Sh.: 3
DOT 294410K
MP: 240.71
ID: CSL24071.3X

NOTE:
1) DO NOT JUMPER UNUSED INPUTS
2) THE CAR14 SERIAL PORT IS AVAILABLE TO ADD REMOTE CONNECTIVITY TO EXISTING LOGGING EQUIPMENT. USE NULL MODEM CABLE WITH SHIELDING DISCONNECTED AT ONE OR BOTH SIDES.

ANALOG INPUTS:
A1) B12X BATTERY BANK
A2) B12 BATTERY BANK
A3) B12-F BATTERY BANK
A4) BATTERY BANK 4

DIGITAL INPUTS
D1) XR (BLUE WIRE)
D2) HSR
D3) ANALYZER FAILURE (WHITE WIRE)
D4) HIGH TEMPERATURE (ORANGE WIRE)
D5) GATES NOT UP OR DOWN PROPERLY (GREEN WIRE)
D6)
D7) VDHR - EGMS LOOP HEALTH
D8) LTOR - EGMS LONG-TERM OBSTACLE
D9) ITCS HEALTH (JUMPER TO B12SP IF UNUSED)
D10) POWER OFF INDICATION

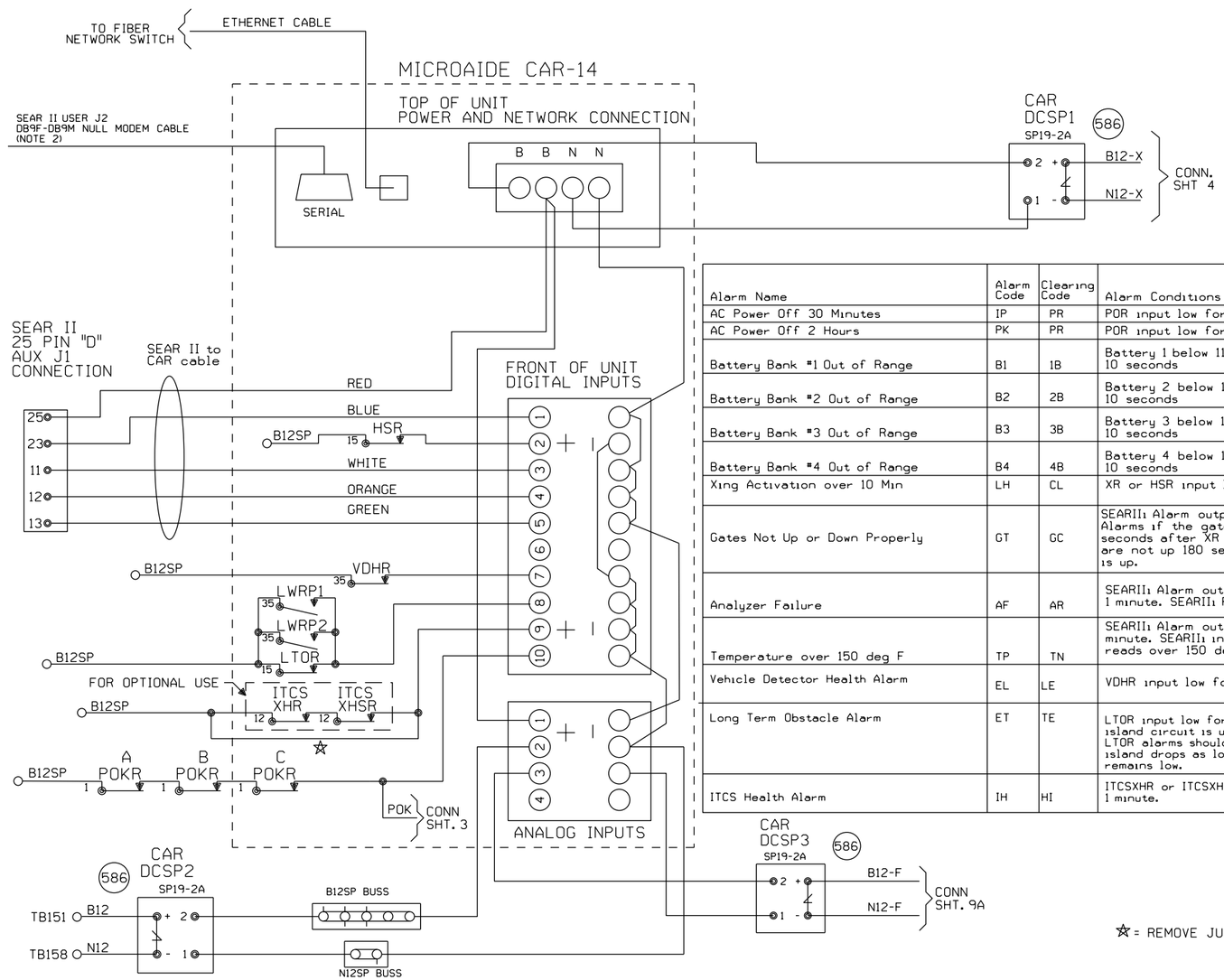

CONFIG: C14HISPEED

Alarm Name	Alarm Code	Clearing Code	Alarm Conditions	Alarm Clearing Conditions	Cleared by Maintainer Mode?
AC Power Off 30 Minutes	IP	PR	POR input low for 30 minutes.	POR input high for 5 minutes.	No
AC Power Off 2 Hours	PK	PR	POR input low for 2 Hours.	POR input high for 5 minutes.	No
Battery Bank #1 Out of Range	B1	1B	Battery 1 below 11V or over 19V for 10 seconds	Battery 1 between 11V or over 19V for 5 minutes	No
Battery Bank #2 Out of Range	B2	2B	Battery 2 below 11V or over 19V for 10 seconds	Battery 2 between 11V or over 19V for 5 minutes	No
Battery Bank #3 Out of Range	B3	3B	Battery 3 below 11V or over 19V for 10 seconds	Battery 3 between 11V or over 19V for 5 minutes	No
Battery Bank #4 Out of Range	B4	4B	Battery 4 below 11V or over 19V for 10 seconds	Battery 4 between 11V or over 19V for 5 minutes	No
Xing Activation over 10 Min	LH	CL	XR or HSR input low for 10 minutes.	XR and HSR input high for 10 seconds.	Yes
Gates Not Up or Down Properly	GT	GC	SEARII: Alarm output high for 5 seconds. Alarms if the gates are not down 45 seconds after XR drops, or the gates are not up 180 seconds after the XR is up.	SEARII: alarm output low for 5 seconds. Gates have recovered	No
Analyzer Failure	AF	AR	SEARII: Alarm output high for 1 minute. SEARII: Failure	SearII: alarm output low for 5 seconds. SEARII: has recovered after an analyzer failure alarm.	No
Temperature over 150 deg F	TP	TN	SEARII: Alarm output high for 1 minute. SEARII: internal thermometer reads over 150 degrees F.	SEARII: Alarm Output low for 5 minutes. Temperature has reduced after a High-Temp alarm.	No
Vehicle Detector Health Alarm	EL	LE	VDHR input low for 10 seconds	VDHR input is high for 5 seconds	No
Long Term Obstacle Alarm	ET	TE	LTOR input low for 1 minute, only when island circuit is up. Any pre-existing LTOR alarms should not clear when island drops as long as LTOR input remains low.	LTOR input is high for 5 seconds	No
ITCS Health Alarm	IH	HI	ITCSXHR or ITCSXHSR low for 1 minute.	ITCSXHR or ITCSXHSR high for 5 seconds.	No

☆ = REMOVE JUMPER IF ITCSXHR AND ITCSXHSR RELAYS ARE USED.

NEW SHEET

Designed: 09/27/12
TIER IS PHASE 1 M.P. 239.70 TO M.P. 255.35 TO UPGRADE XING TO 4 QUAD WITH EGMS, VARIOUS C.P.'S
Rev: WO#: 10804
IS: NBT / NST/MJF

MODIFICATION LEVEL	
O. A. LAST LEVEL CHECKED	DU
LAST LEVEL MOD THIS TYPICAL	DU
LAST LEVEL BY DESIGNER	DU
CHANGED FROM TYPICAL?	Y

REV 01.24.11 4K ACDCCAR14SI1.3

CIRCUIT MODIFICATIONS ARE NOT TO BE MADE WITHOUT AUTHORITY FROM THE OFFICE OF SIGNAL DESIGN

Date: 09/27/12
Des: NST
Chk: NBT
AFE: 10804

UNION PACIFIC RAILROAD
SHIPMAN, ILLINOIS
FIELD CROSSING
SPRINGFIELD SUBDIVISION
Office of AVP Engineering - Signal Omaha, Nebraska

Sh.: 3A
DOT 294410K
MP: 240.71
ID: CSL24071.3AX

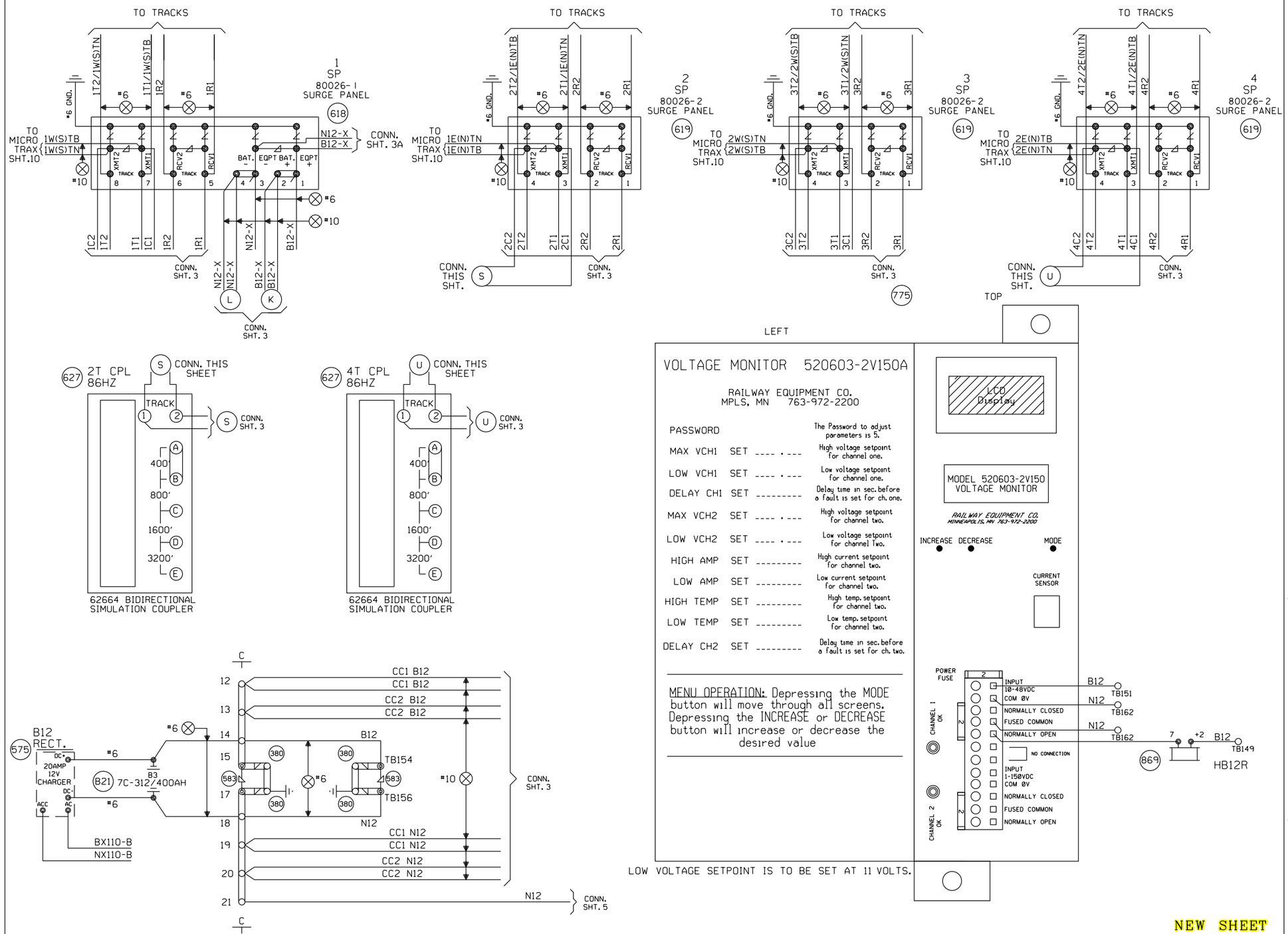

NEW SHEET

Designed: 09/27/12 TIER IS PHASE 1 M.P. 239.70 TO M.P. 255.35 TO UPGRADE XING TO 4 QUAD WITH EGMS, VARIOUS C.P.'S Rec*: WO*: 10804 IS: NBT / / NST/MJF	MODIFICATION LEVEL		CIRCUIT MODIFICATIONS ARE NOT TO BE MADE WITHOUT AUTHORITY FROM THE OFFICE OF SIGNAL DESIGN	Date: 09/27/12	UNION PACIFIC RAILROAD	Sh.: 4
	Q.A. LAST LEVEL CHECKED	DU		Des: NST	SHIPMAN, ILLINOIS	DOT 294410K
	LAST LEVEL MOD THIS TYPICAL	DU		Chk: NBT	FIELD CROSSING	MP: 240.71
	LAST LEVEL BY DESIGNER	DU		AFE: 10804	SPRINGFIELD SUBDIVISION	ID: CSL24071.4X
	CHANGED FROM TYPICAL?	Y			Office of AVP Engineering - Signal Omaha, Nebraska	
	REV 01.24.11 4K 2TKEGMS.4					

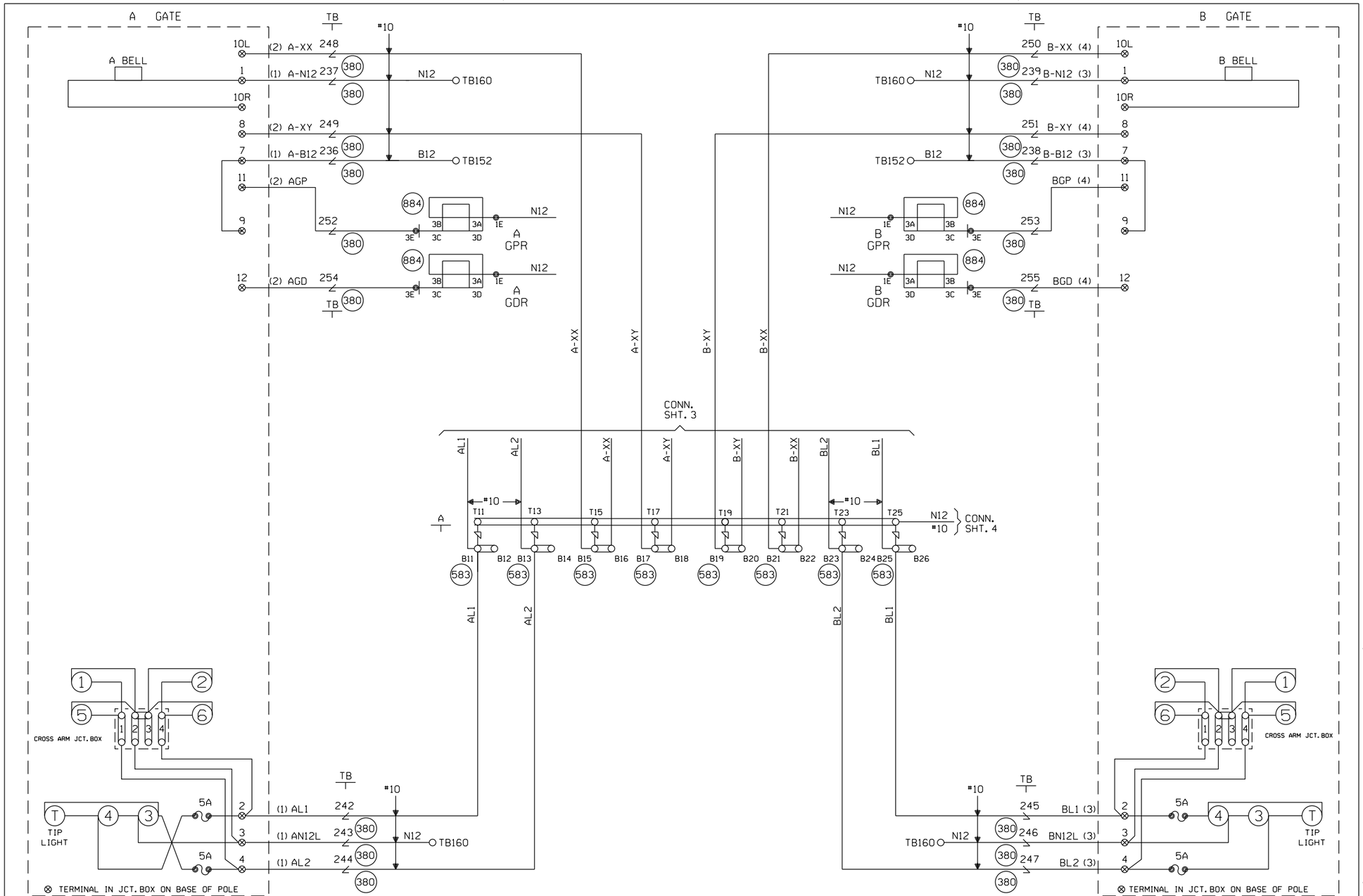

CABLE TABULATION

CABLE NO. 1 5C. NO.6 U.G.B.T.
CABLE NO. 2 7C. NO.14 U.G.B.T.
CABLE NO. 3 5C. NO.6 U.G.B.T.
CABLE NO. 4 7C. NO.14 U.G.B.T.

NEW SHEET

Designed: 09/27/12
TIER IS PHASE I M.P. 234.70 TO M.P. 255.35 TO UPGRADE XING TO 4 QUAD WITH EGMS, VARIOUS C.P.'S
Rec*: WO*: 10804
IS: NBT / / /NST/MJF

MODIFICATION LEVEL	
O. A. LAST LEVEL CHECKED	DU
LAST LEVEL MOD THIS TYPICAL	DU
LAST LEVEL BY DESIGNER	DU
CHANGED FROM TYPICAL?	Y

REV 01.24.11 4K GFCTYP.5

CIRCUIT MODIFICATIONS ARE NOT TO BE MADE WITHOUT AUTHORITY FROM THE OFFICE OF SIGNAL DESIGN

Date: 09/27/12
Des: NST
Chk: NBT
AFE: 10804

UNION PACIFIC RAILROAD
SHIPMAN, ILLINOIS
FIELD CROSSING
SPRINGFIELD SUBDIVISION
Office of AVP Engineering - Signal Omaha, Nebraska

Sh.: 5
DOT 294410K
MP: 240.71
ID: CSL24071.5X

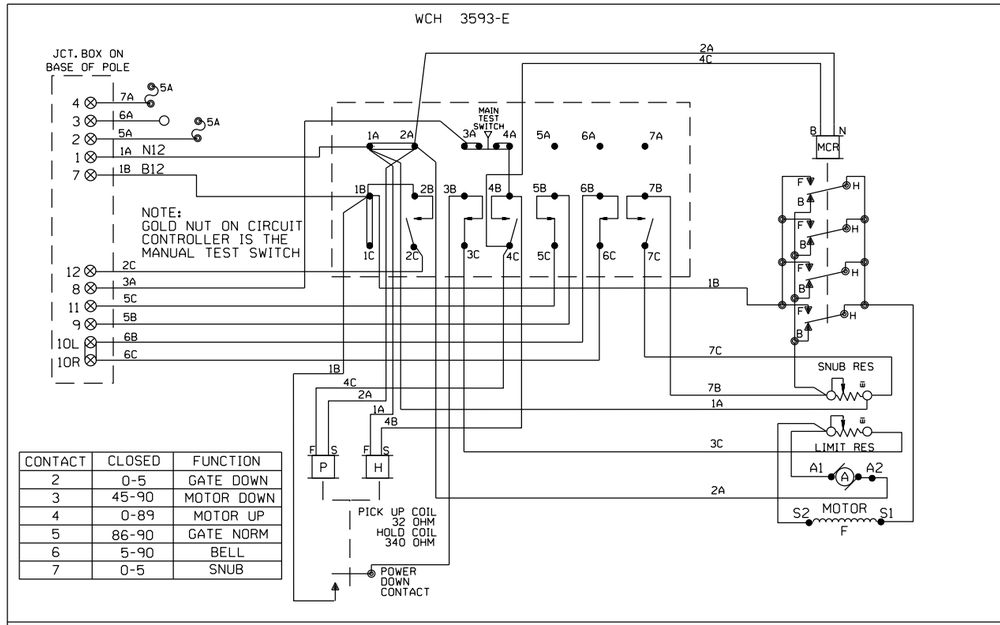

CONTACT	CLOSED	FUNCTION
2	0-5	GATE DOWN
3	45-90	MOTOR DOWN
4	0-89	MOTOR UP
5	86-90	GATE NORM
6	5-90	BELL
7	0-5	SNUB

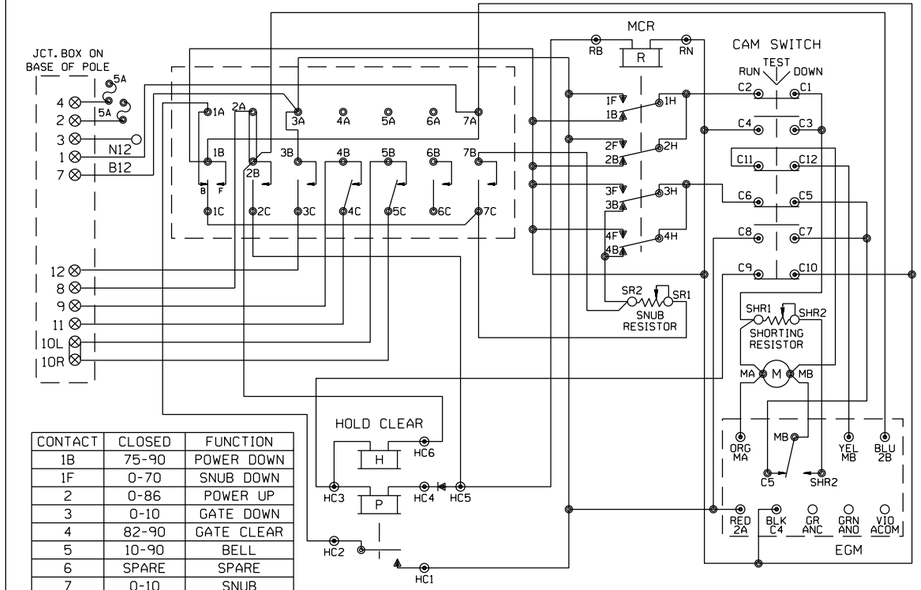

CONTACT	CLOSED	FUNCTION
1B	75-90	POWER DOWN
1F	0-70	SNUB DOWN
2	0-86	POWER UP
3	0-10	GATE DOWN
4	82-90	GATE CLEAR
5	10-90	BELL
6	SPARE	SPARE
7	0-10	SNUB

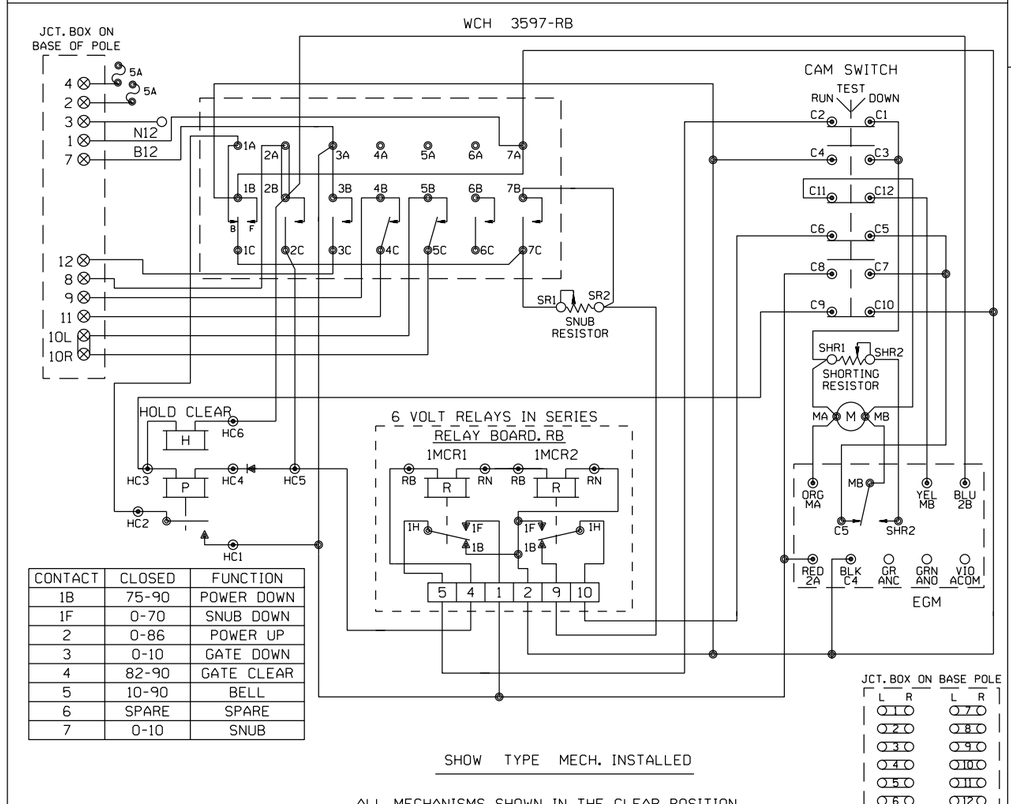

CONTACT	CLOSED	FUNCTION
1B	75-90	POWER DOWN
1F	0-70	SNUB DOWN
2	0-86	POWER UP
3	0-10	GATE DOWN
4	82-90	GATE CLEAR
5	10-90	BELL
6	SPARE	SPARE
7	0-10	SNUB

SHOW TYPE MECH. INSTALLED

ALL MECHANISMS SHOWN IN THE CLEAR POSITION

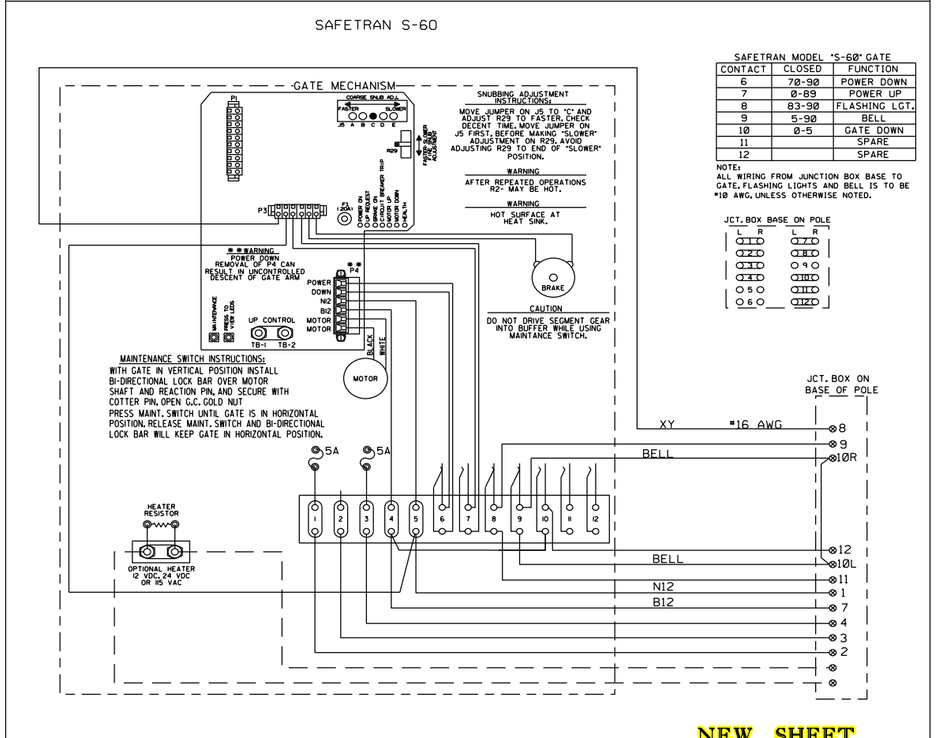

SAFETRAN MODEL "S-60" GATE

CONTACT	CLOSED	FUNCTION
6	70-90	POWER DOWN
7	0-89	POWER UP
8	83-90	FLASHING LGT.
9	5-90	BELL
10	0-5	GATE DOWN
11		SPARE
12		SPARE

NOTE:
ALL WIRING FROM JUNCTION BOX BASE TO GATE. FLASHING LIGHTS AND BELL IS TO BE #10 AWG, UNLESS OTHERWISE NOTED.

JCT. BOX BASE ON POLE

NEW SHEET

Designed: 09/27/12
TIER IS PHASE 1 M.P. 239.70 TO M.P. 255.35 TO UPGRADE XING TO 4 QUAD WITH EGMS, VARIOUS C.P.'S
Rec#: WO#: 10804
IS: NBT / / NST/MJF

MODIFICATION LEVEL	
Q.A. LAST LEVEL CHECKED	DU
LAST LEVEL MOD THIS TYPICAL	DU
LAST LEVEL BY DESIGNER	DU
CHANGED FROM TYPICAL?	N

REV 01.24.11 4K GWIRING.7

CIRCUIT MODIFICATIONS ARE NOT TO BE MADE WITHOUT AUTHORITY FROM THE OFFICE OF SIGNAL DESIGN

Date: 09/27/12
Des: NST
Chk: NBT
AFE: 10804

UNION PACIFIC RAILROAD

SHIPMAN, ILLINOIS
FIELD CROSSING
SPRINGFIELD SUBDIVISION

Office of AVP Engineering - Signal Omaha, Nebraska

Sh.: 6
DOT 294410K
MP: 240.71
ID: CSL24071.6X

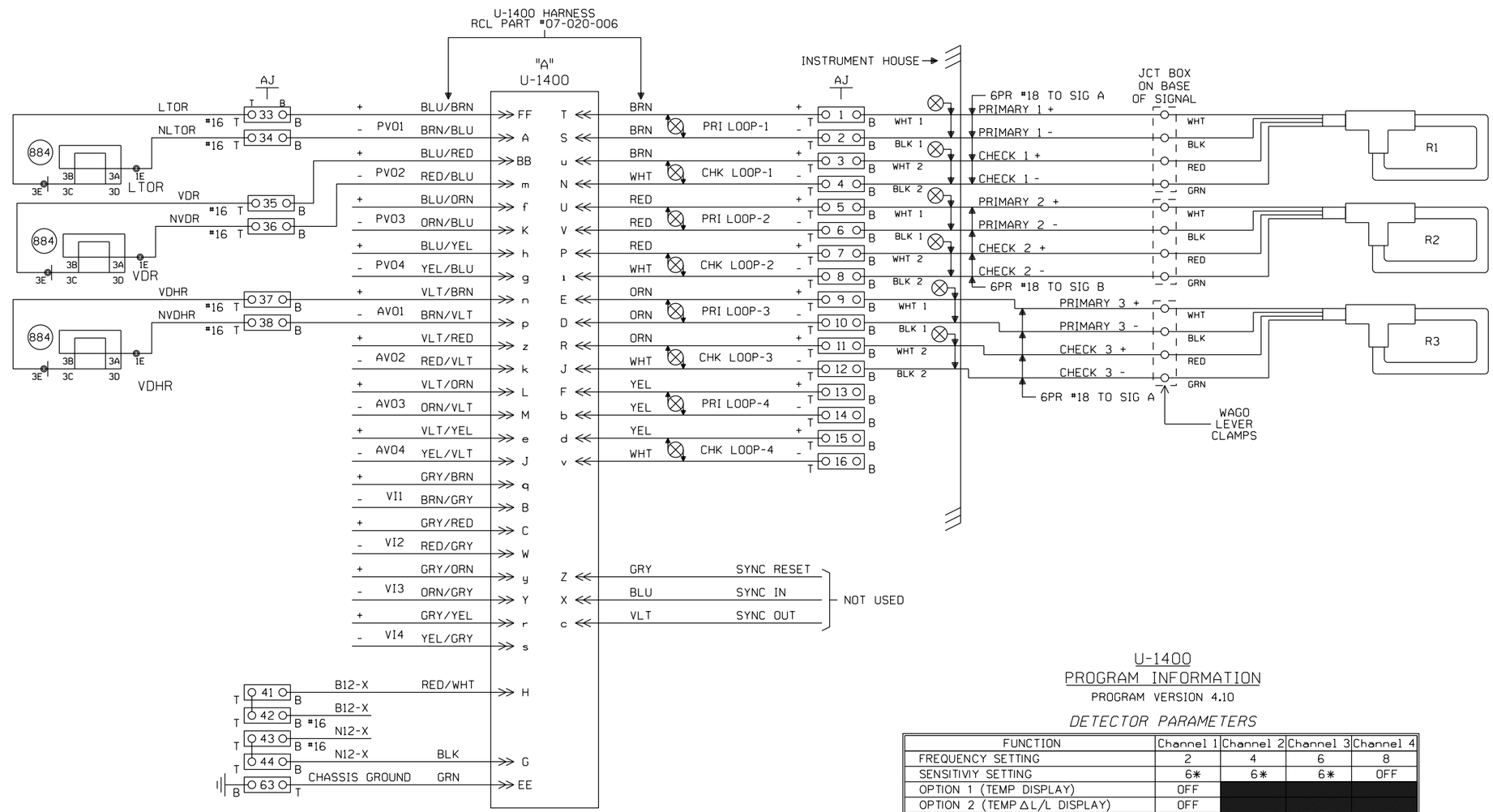

U-1400
PROGRAM INFORMATION
PROGRAM VERSION 4.10

DETECTOR PARAMETERS

FUNCTION	Channel 1	Channel 2	Channel 3	Channel 4
FREQUENCY SETTING	2	4	6	8
SENSITIVIY SETTING	6*	6*	6*	OFF
OPTION 1 (TEMP DISPLAY)	OFF			
OPTION 2 (TEMP ΔL/L DISPLAY)	OFF			
OPTION 3 (NOISE FILTER)	3.00	3.00	3.00	3.00
OPTION 4 (TRACKING)	4.02	4.02	4.02	4.02
OPTION 5 (SENSITIVITY BOOST)	5.00	5.00	5.00	5.00
OPTION 6 (TEMP AUDIBLE SIGNAL)	OFF	OFF	OFF	OFF
CHECKLOOP INTERVAL	005	005	005	005
DETECTOR ID	000			
OPTION 7 (SYNC)*	7.00			
OPTION 8 (ISL)*	OFF			
OPTION 9 (SE)	OFF	OFF	OFF	OFF
PRIMARY VITAL OUTPUT DELAY	60	1	000	000
PRIMARY VITAL OUTPUT EXTENSION	00.0	1	00.0	00.0
PRIMARY VITAL OUTPUT MAPPING	70	70	00	00
AUX VITAL OUTPUT MAPPING	007	000	000	000

* FIELD VERIFY

CABLE TABULATION

CABLE NO. (13) 6/PR #18 U.G.C. TO JCT BOX ON BASE OF GATE "A" (RCL PART #03-094-005)
CABLE NO. (14) 6/PR #18 U.G.C. TO JCT BOX ON BASE OF GATE "B" (RCL PART #03-094-005)

NEW SHEET

Designed: 09/27/12
TIER IS PHASE 1 M.P. 239.70 TO M.P. 255.35 TO UPGRADE XING TO 4 QUAD WITH EGMS, VARIOUS C.P.'S
Rec#: WO#: 10804
IS: NBT / / /NST/MJF

CIRCUIT MODIFICATIONS ARE NOT TO BE MADE WITHOUT AUTHORITY FROM THE OFFICE OF SIGNAL DESIGN

Date: 09/27/12
Des: NST
Chk: NBT
AFE: 10804

UNION PACIFIC RAILROAD
SHIPMAN, ILLINOIS
FIELD CROSSING
SPRINGFIELD SUBDIVISION
Office of AVP Engineering - Signal Omaha, Nebraska

Sh.: 7
DOT 294410K
MP: 240.71
ID: CSL24071.7X

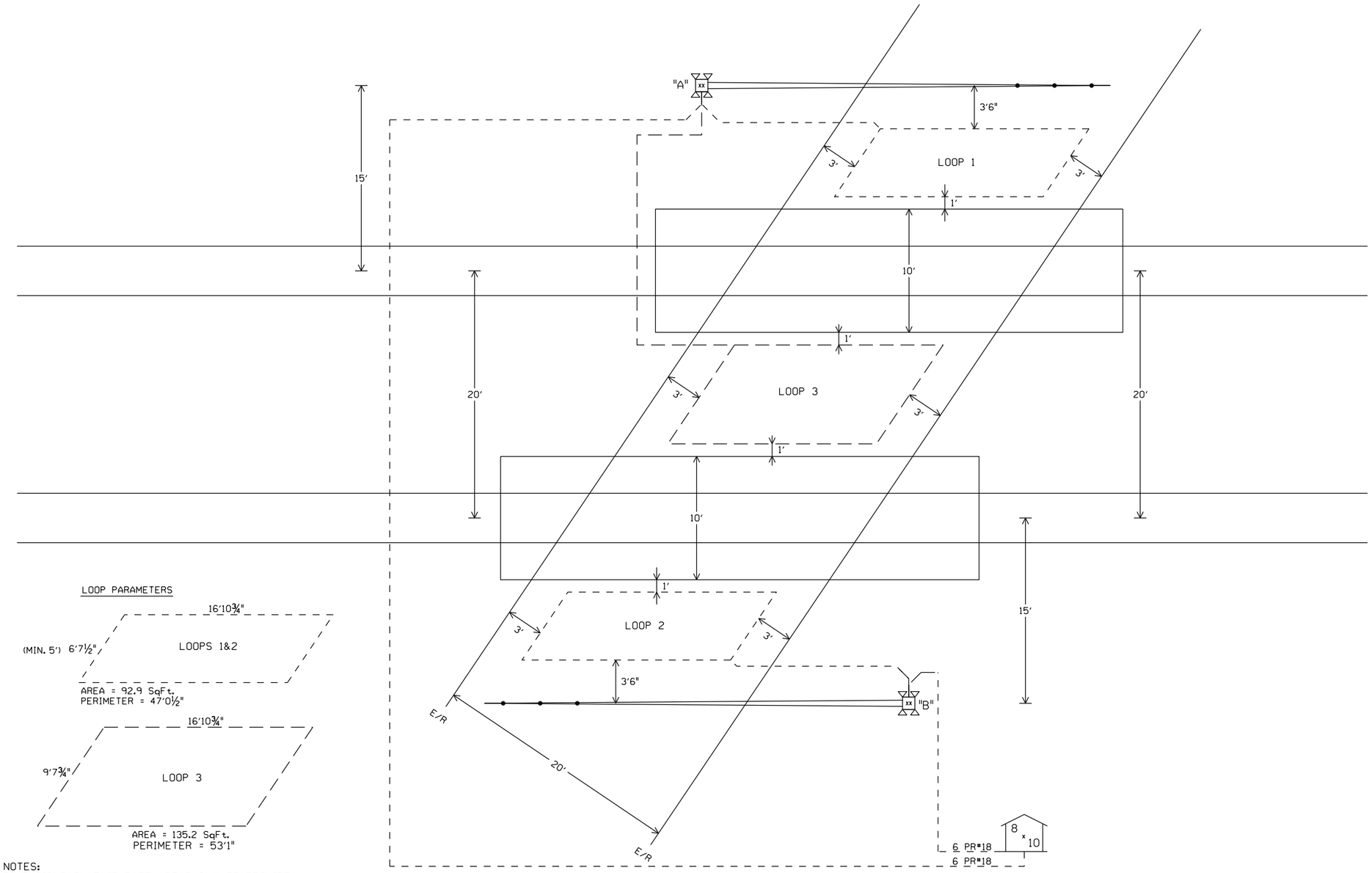

LOOP PLACEMENT SKETCH
NOT TO SCALE

LOOP PARAMETERS

NOTES:
1. DIMENSIONS ON THIS PAGE ARE SHOWN TO PROVIDE GUIDANCE FOR CONSTRUCTION CREWS AND FUTURE MAINTENANCE REPAIRS.
2. REFER TO SAFETRAN EGMS STANDARDS AND RECOMENDED PRACTICES FOR LOOP LAYOUT DESIGN DETAILS.
3. SAFETRAN EGMS JUNCTION BOX INSTALLED ON TOP OF EACH FOUNDATION.
4. INSTALL SAFETRAN 6 PAIR #18 CABLE FROM JUNCTION BOX TO BUNGALOW.
5. E/R = EDGE OF ROAD

LOOP SIZES

LOOP #	LOOP PERIMETER	LOOP LEAD-IN	PART #
1	48'	25'	PLC-48-25
2	48'	25'	PLC-48-25
3	54'	50'	PLC-54-50

NEW SHEET

Designed: 09/27/12
TIER IS PHASE 1 M.P. 239.70 TO M.P. 255.35 TO UPGRADE XING TO 4 QUAD WITH EGMS, VARIOUS C.P.'S
Rec*: WO*: 10804
IS: NST / / NST/MJF

MODIFICATION LEVEL	
O. A. LAST LEVEL CHECKED	DU
LAST LEVEL MOD THIS TYPICAL	DU
LAST LEVEL BY DESIGNER	DU
CHANGED FROM TYPICAL?	Y

REV 01.24.11 4K 2TKEGMS.8B

CIRCUIT MODIFICATIONS ARE NOT TO BE MADE WITHOUT AUTHORITY FROM THE OFFICE OF SIGNAL DESIGN

Date: 09/27/12
Des: NST
Chk: NBT
AFE: 10804

UNION PACIFIC RAILROAD
SHIPMAN, ILLINOIS
FIELD CROSSING
SPRINGFIELD SUBDIVISION
Office of AVP Engineering - Signal Omaha, Nebraska

Sh.: 7A
DOT 294410K
MP: 240.71
ID: CSL24071.7AX

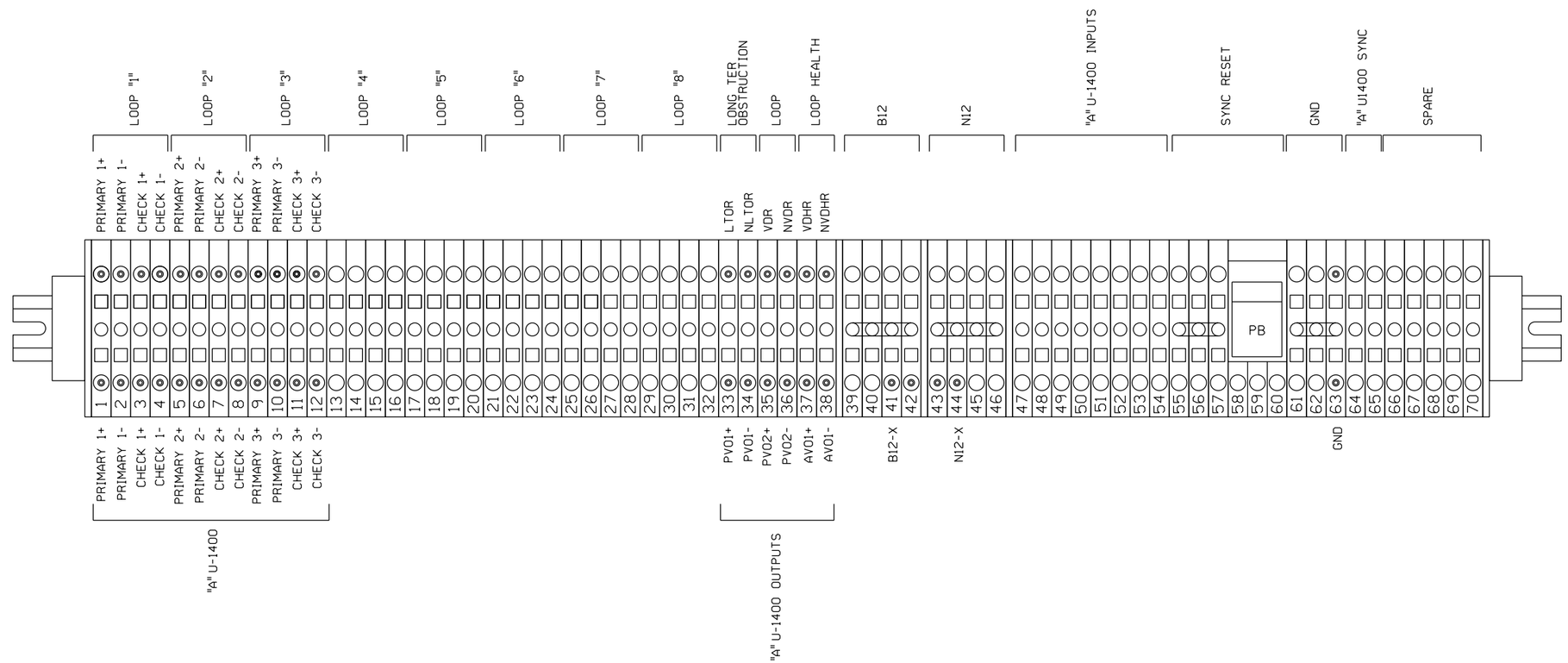

NEW SHEET

							Designed: 09/27/12 TIER IS PHASE 1 M.P. 239.70 TO M.P. 255.35 TO UPGRADE XING TO 4 QUAD WITH EGMS, VARIOUS C.P.'S Rec#: WO#: 10804 IS: NBT / / / NST/MJF	CIRCUIT MODIFICATIONS ARE NOT TO BE MADE WITHOUT AUTHORITY FROM THE OFFICE OF SIGNAL DESIGN	Date: 09/27/12 Des: NST Chk: NBT AFE: 10804	UNION PACIFIC RAILROAD SHIPMAN, ILLINOIS FIELD CROSSING SPRINGFIELD SUBDIVISION Office of AVP Engineering - Signal Omaha, Nebraska	Sh.: 8 DOT 294410K MP: 240.71 ID: CSL24071.8X

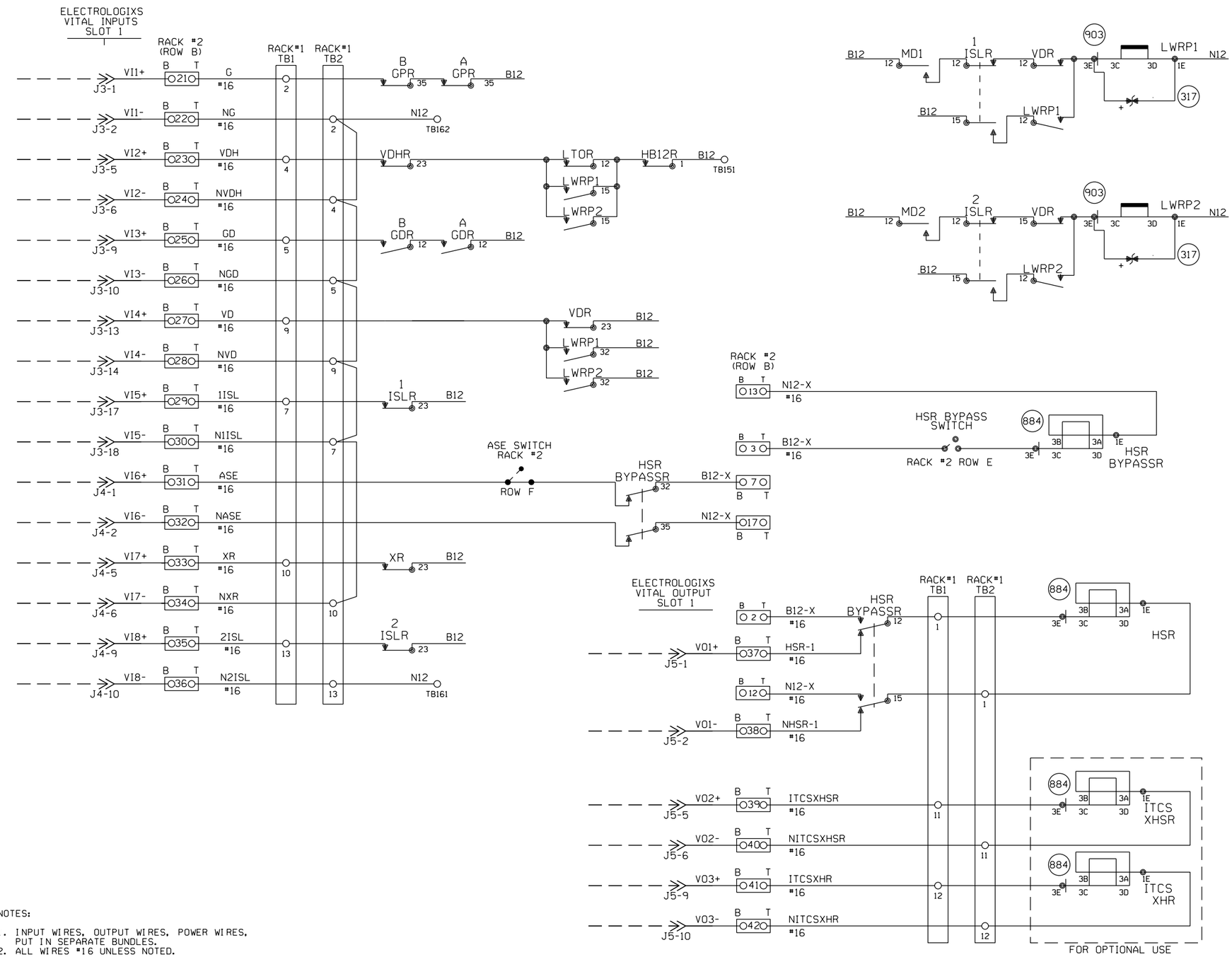

NOTES:

1. INPUT WIRES, OUTPUT WIRES, POWER WIRES, PUT IN SEPARATE BUNDLES.
2. ALL WIRES #16 UNLESS NOTED.
3. O?? O 2 POSITION WAGO BLOCK.

NEW SHEET

Designed: 09/27/12
TIER 1S PHASE 1 M.P. 239.70 TO M.P. 255.35 TO UPGRADE XING TO 4 QUAD WITH EGMS, VARIOUS C.P.'S
Rec#: W0#: 10804
IS: NBT / NST/MJF

CIRCUIT MODIFICATIONS ARE NOT TO BE MADE WITHOUT AUTHORITY FROM THE OFFICE OF SIGNAL DESIGN

Date: 09/27/12
Des: NST
Chk: NBT
AFE: 10804

UNION PACIFIC RAILROAD

SHIPMAN, ILLINOIS
FIELD CROSSING
SPRINGFIELD SUBDIVISION

Office of AVP Engineering - Signal — Omaha, Nebraska

Sh.: 9
DOT 294410K
MP: 240.71
ID: CSL24071.9X

WIRING NOTE:
WIRE 30' LONG WIRES TO BSA-4

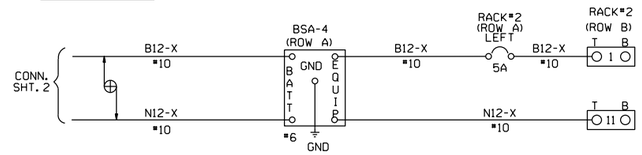

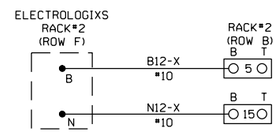

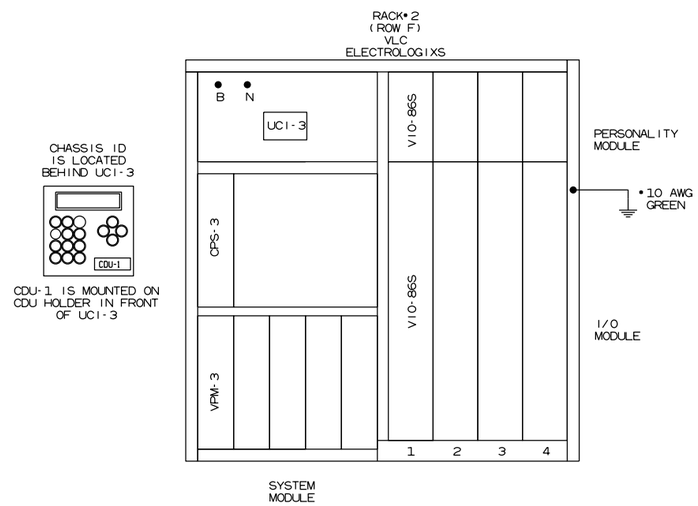

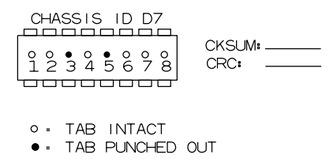

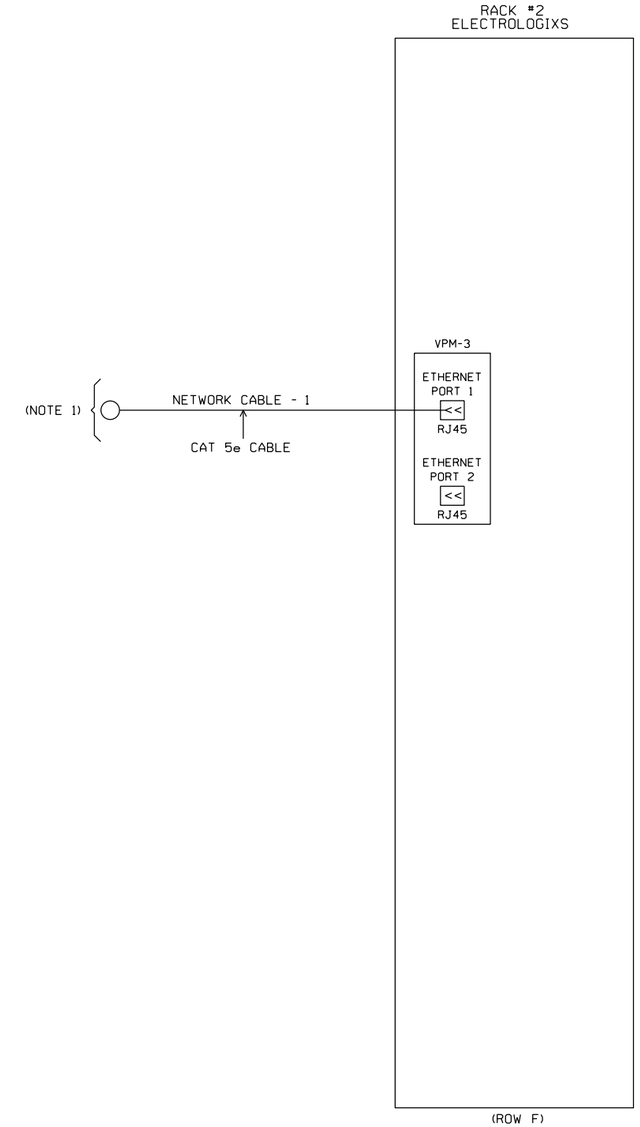

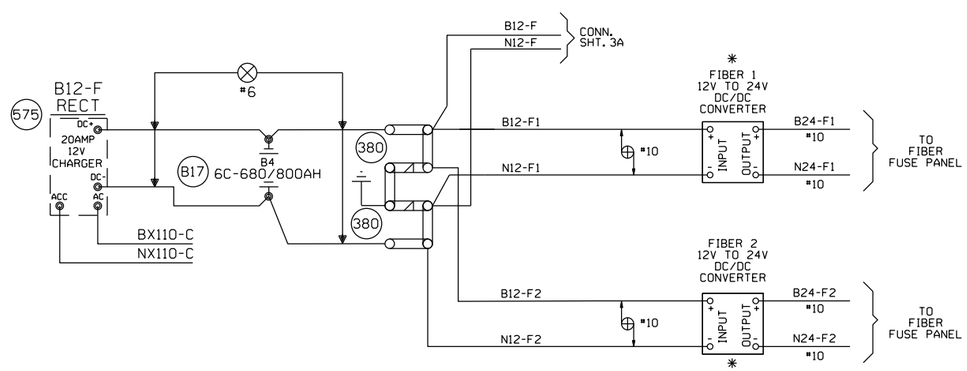

NOTES:

1. NETWORK SWITCH INSTALLED BY RR.

DENOTES TWISTED PAIR

O?? O 2 POSITION WAGO BLOCK

✱ = TO BE FIELD MOUNTED AFTER IT IS DETERMINED WHERE TO MOUNT.

NEW SHEET

Designed: 09/27/12
TIER IS PHASE 1
M.P. 239.70 TO M.P. 255.35 TO UPGRADE XING TO 4 QUAD WITH EGMS, VARIOUS C.P.'S
Rec'd: WO#: 10804
IS: NBT / /NST/MJF

CIRCUIT MODIFICATIONS ARE NOT TO BE MADE WITHOUT AUTHORITY FROM THE OFFICE OF SIGNAL DESIGN

Date: 09/27/12	
Des: NST	
Chk: NBT	
AFE: 10804	

UNION PACIFIC RAILROAD
SHIPMAN, ILLINOIS
FIELD CROSSING
SPRINGFIELD SUBDIVISION
Office of AVP Engineering - Signal Omaha, Nebraska

Sh.:	9A
DOT	294410K
MP:	240.71
ID:	CSL24071.9AX

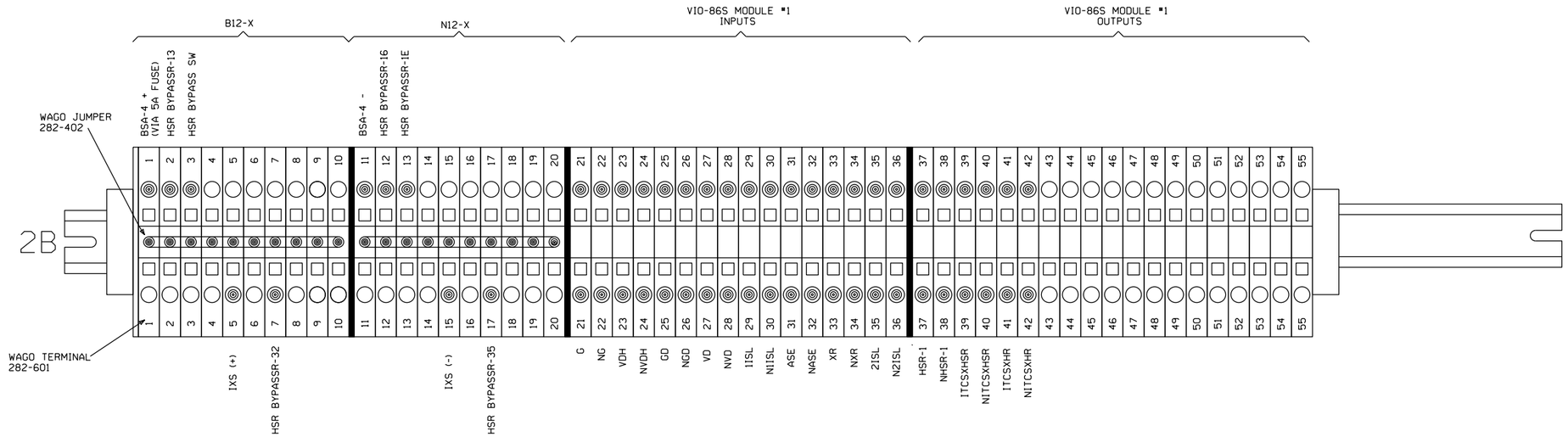

ELECTROLOGIXS WAGO BLOCKS

NEW SHEET

							Designed: 09/27/12 TIER 1S PHASE 1 M.P. 239.70 TO M.P. 255.35 TO UPGRADE XING TO 4 QUAD WITH EGMS, VARIOUS C.P.'S Rec#: WO#: 10804 IS: NBT / / /NST/MJF	CIRCUIT MODIFICATIONS ARE NOT TO BE MADE WITHOUT AUTHORITY FROM THE OFFICE OF SIGNAL DESIGN	Date: 09/27/12 Des: NST Chk: NBT AFE: 10804	UNION PACIFIC RAILROAD SHIPMAN, ILLINOIS FIELD CROSSING SPRINGFIELD SUBDIVISION Office of AVP Engineering - Signal Omaha, Nebraska	Sh.: 9B DOT 294410K MP: 240.71 ID: CSL24071.9BX

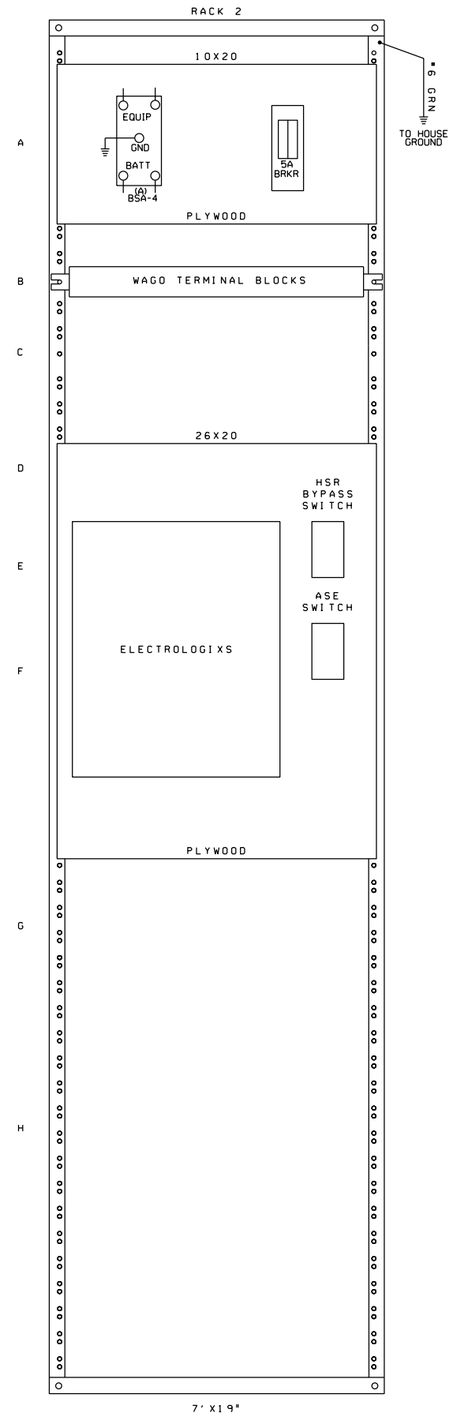

NEW SHEET

Designed: 09/27/12
TIER IS PHASE 1
M.P. 239.70 TO M.P. 255.35 TO UPGRADE XING TO 4 QUAD WITH EGMS, VARIOUS C.P.'S
Rec*: WO*: 10804
IS: NBT / / /NST/MJF

CIRCUIT MODIFICATIONS ARE NOT TO BE MADE WITHOUT AUTHORITY FROM THE OFFICE OF SIGNAL DESIGN

Date:	09/27/12
Des:	NST
Chk:	NBT
AFE:	10804

UNION PACIFIC RAILROAD

SHIPMAN, ILLINOIS
FIELD CROSSING
SPRINGFIELD SUBDIVISION

Office of AVP Engineering - Signal — Omaha, Nebraska

Sh.:	9C
DOT	294410K
MP:	240.71
ID:	CSL24071.9CX

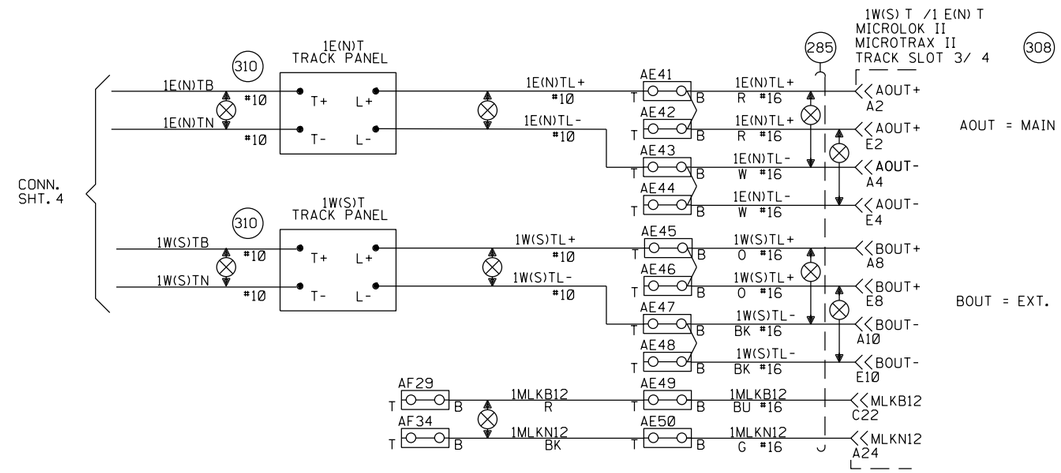

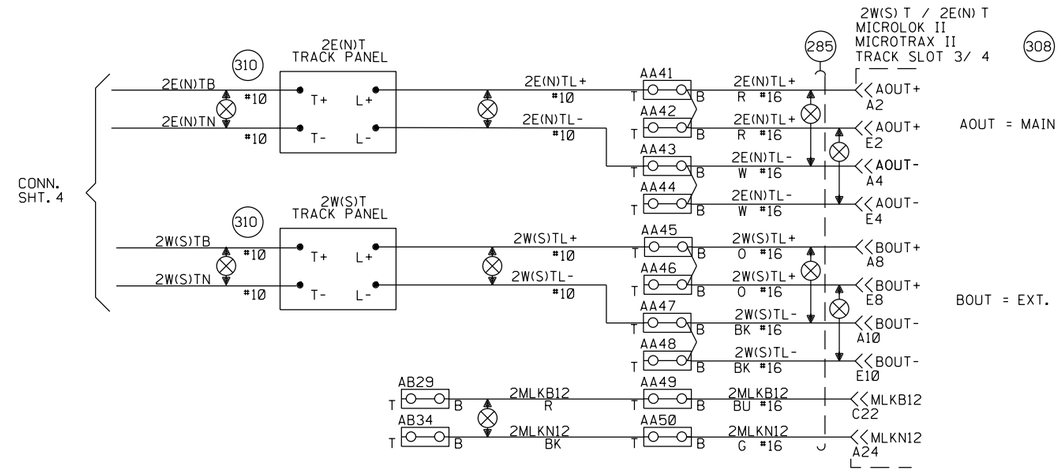

NOTES:

EAST= (N)ORTH.
WEST= (S)OUTH.

⊘ = OBSERVE CORRECT POLARITY. EQUIPMENT WILL BE DAMAGED IF CONNECTIONS ARE REVERSED

ENSURE TRACK POLARITY IS TRANSPOSED ACROSS ALL INSULATED JOINTS.

NEW SHEET

Designed: 09/27/12
TIER IS PHASE 1
M.P.239.70 TO M.P. 255.35 TO UPGRADE XING TO 4 QUAD WITH EGMS, VARIOUS C.P.'S
Rec'd: WO#: 10804
IS: NBT /
/ /NST/MJF

MODIFICATION LEVEL	
O. A. LAST LEVEL CHECKED	DS
LAST LEVEL MOD THIS TYPICAL	DS
LAST LEVEL BY DESIGNER	DU
CHANGED FROM TYPICAL?	Y

REV 8/20/10 ITMLHBINTU.IS

CIRCUIT MODIFICATIONS ARE NOT TO BE MADE WITHOUT AUTHORITY FROM THE OFFICE OF SIGNAL DESIGN

Date: 09/27/12
Des: NST
Chk: NBT
AFE: 10804

UNION PACIFIC RAILROAD
SHIPMAN, ILLINOIS
FIELD CROSSING
SPRINGFIELD SUBDIVISION
Office of AVP Engineering - Signal — Omaha, Nebraska

Sh.: 10
DOT 294410K
MP: 240.71
ID: CSL24071.10X

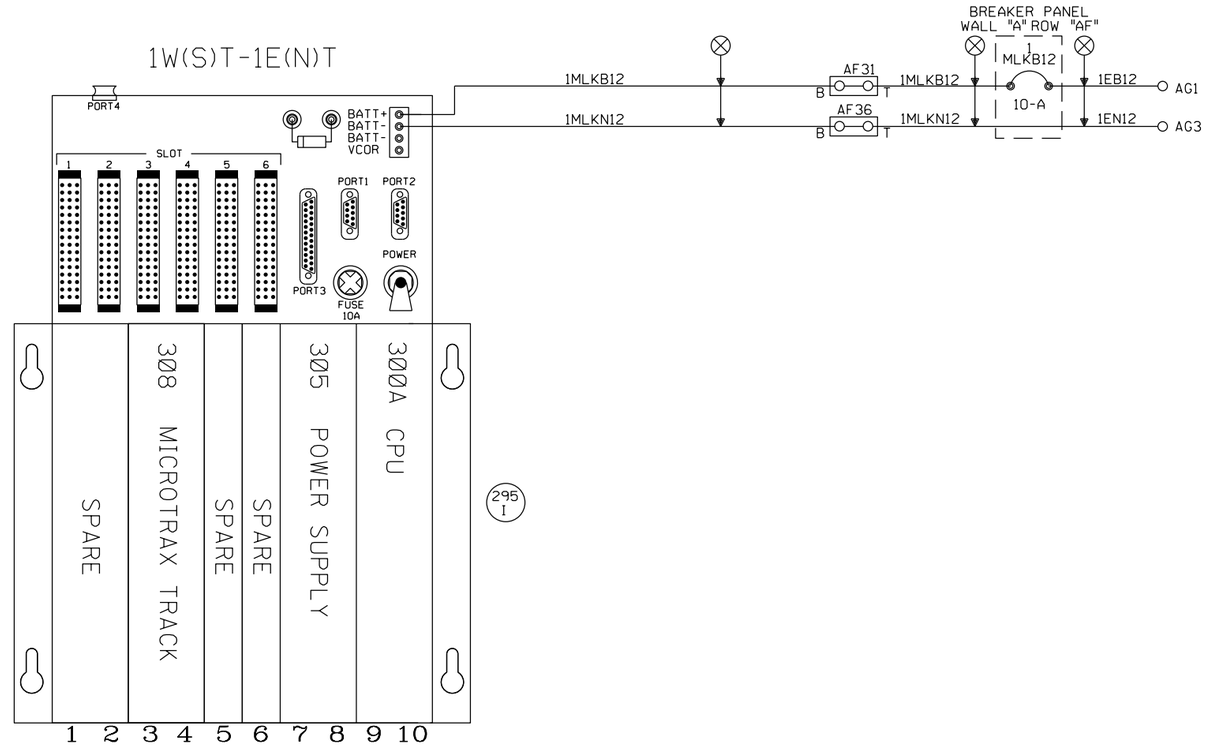

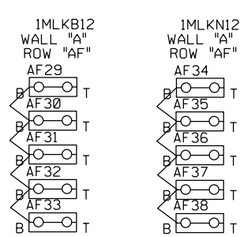

NEW SHEET

Designed: 09/27/12

TIER IS PHASE 1
M.P.239.70 TO M.P.
255.35 TO UPGRADE
XING TO 4 QUAD WITH
EGMS, VARIOUS C.P.'S
Rec'd: WO#: 10804
IS: NBT /
/ /NST/MJF

MODIFICATION LEVEL	
O. A. LAST LEVEL CHECKED	DU
LAST LEVEL MOD THIS TYPICAL	DU
LAST LEVEL BY DESIGNER	DU
CHANGED FROM TYPICAL?	Y

REV 8/20/10 1TMLHBINTU.4S

CIRCUIT MODIFICATIONS ARE NOT TO BE MADE WITHOUT AUTHORITY FROM THE OFFICE OF SIGNAL DESIGN

Date: 09/27/12
Des: NST
Chk: NBT
AFE: 10804

UNION PACIFIC RAILROAD

SHIPMAN, ILLINOIS
FIELD CROSSING
SPRINGFIELD SUBDIVISION

Office of AVP Engineering - Signal Omaha, Nebraska

Sh.: 11
DOT 294410K
MP: 240.71
ID: CSL24071.11X

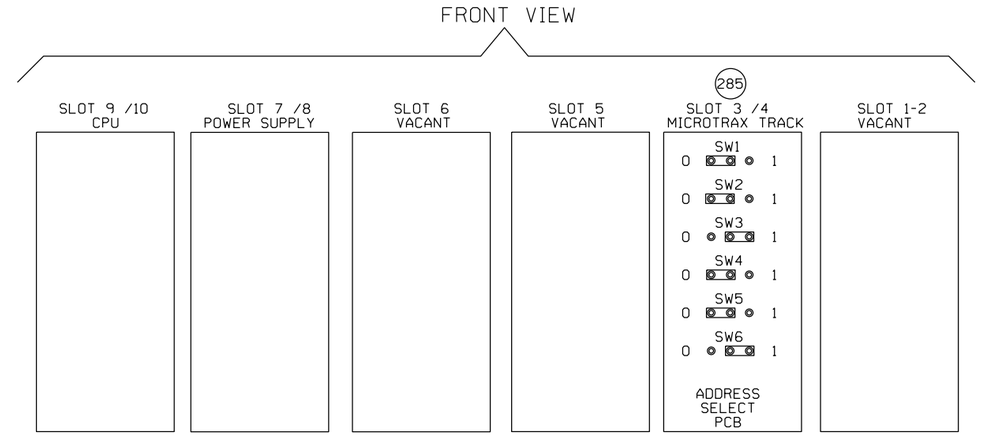

NOTE: FOR PTC COMPATIBLE CPU JUMPER SETTINGS REFER TO
ANSALDO MANUAL 1D1.0028 PAGE 1-26 1-27 1-28 REV.1 DATE 8/2009

ML8RRH REV B

15 SEC SLOW PICK ET TO PREVENT JOINT HOP	
15 SEC SLOW PICK WT TO PREVENT JOINT HOP	
PROGRAM ID 1 (BINARY 1)	
PROGRAM ID 2 (BINARY 2)	
PROGRAM ID 3 (BINARY 4)	X
PROGRAM ID 4 (BINARY 8)	
PROGRAM ID 5 (BINARY 16)	
PROGRAM ID 6 (BINARY 32)	X
PROGRAM ID 7 (BINARY 64)	X
PROGRAM ID 8 (BINARY 128)	
CODE P?	X

PLACE AN "X" IN THE BOX FOR DESIRED CONFIGURATION.

1W(S)-1E(N)T

NEW SHEET

Designed: 09/27/12
TIER IS PHASE I M.P. 239.70 TO M.P. 255.35 TO UPGRADE XING TO 4 QUAD WITH EGMS, VARIOUS C.P.'S
Rec*: WO#: 10804
IS: NBT / / /NST/MJF

MODIFICATION LEVEL	
O. A. LAST LEVEL CHECKED	DU
LAST LEVEL MOD THIS TYPICAL	DU
LAST LEVEL BY DESIGNER	DU
CHANGED FROM TYPICAL?	Y
REV 8/20/10 1TMLHBINTU.5	

CIRCUIT MODIFICATIONS ARE NOT TO BE MADE WITHOUT AUTHORITY FROM THE OFFICE OF SIGNAL DESIGN

Date: 09/27/12
Des: NST
Chk: NBT
AFE: 10804

UNION PACIFIC RAILROAD
SHIPMAN, ILLINOIS
FIELD CROSSING
SPRINGFIELD SUBDIVISION
Office of AVP Engineering - Signal Omaha, Nebraska

Sh.: 12
DOT 294410K
MP: 240.71
ID: CSL24071.12X

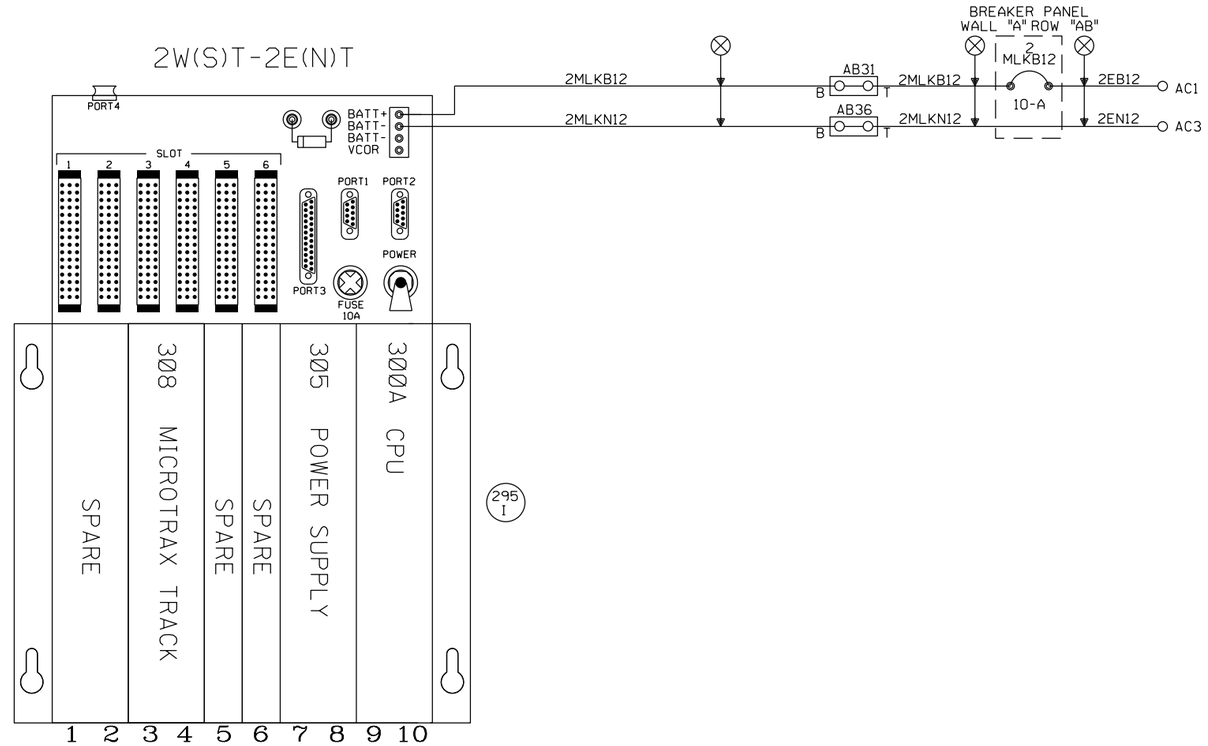

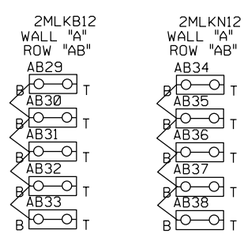

NEW SHEET

Designed: 09/27/12

TIER IS PHASE 1
M.P.239.70 TO M.P.
255.35 TO UPGRADE
XING TO 4 QUAD WITH
EGMS, VARIOUS C.P.'S
Rec'd: WO#: 10804
IS: NBT /
/ /NST/MJF

MODIFICATION LEVEL	
O. A. LAST LEVEL CHECKED	DU
LAST LEVEL MOD THIS TYPICAL	DU
LAST LEVEL BY DESIGNER	DU
CHANGED FROM TYPICAL?	Y

REV 8/20/10 1TMLHBINTU.4S

CIRCUIT MODIFICATIONS ARE NOT TO BE MADE WITHOUT AUTHORITY FROM THE OFFICE OF SIGNAL DESIGN

Date: 09/27/12
Des: NST
Chk: NBT
AFE: 10804

UNION PACIFIC RAILROAD
SHIPMAN, ILLINOIS
FIELD CROSSING
SPRINGFIELD SUBDIVISION
Office of AVP Engineering - Signal Omaha, Nebraska

Sh.: 13
DOT 294410K
MP: 240.71
ID: CSL24071.13X

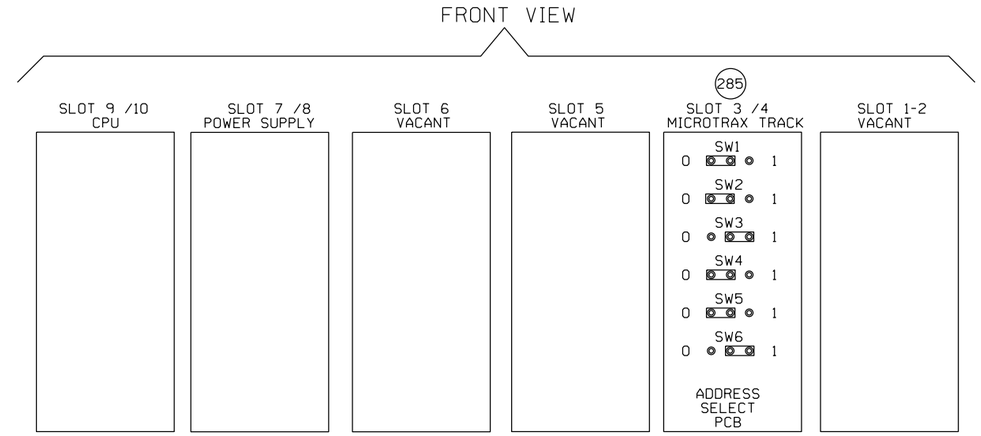

NOTE: FOR PTC COMPATIBLE CPU JUMPER SETTINGS REFER TO
ANSALDO MANUAL 1D1.0028 PAGE 1-26 1-27 1-28 REV.1 DATE 8/2009

ML8RRH REV B

15 SEC SLOW PICK ET TO PREVENT JOINT HOP	
15 SEC SLOW PICK WT TO PREVENT JOINT HOP	
PROGRAM ID 1 (BINARY 1)	
PROGRAM ID 2 (BINARY 2)	
PROGRAM ID 3 (BINARY 4)	X
PROGRAM ID 4 (BINARY 8)	
PROGRAM ID 5 (BINARY 16)	
PROGRAM ID 6 (BINARY 32)	X
PROGRAM ID 7 (BINARY 64)	X
PROGRAM ID 8 (BINARY 128)	
CODE P?	X

PLACE AN "X" IN THE BOX FOR DESIRED CONFIGURATION.

2W(S)-2E(N)T

NEW SHEET

Designed: 09/27/12
TIER IS PHASE I M.P. 239.70 TO M.P. 255.35 TO UPGRADE XING TO 4 QUAD WITH EGMS, VARIOUS C.P.'S
Rec'd: WO#: 10804
IS: NBT / / /NST/MJF

MODIFICATION LEVEL	
O. A. LAST LEVEL CHECKED	DU
LAST LEVEL MOD THIS TYPICAL	DU
LAST LEVEL BY DESIGNER	DU
CHANGED FROM TYPICAL?	Y
REV 8/20/10 1TMLHBINTU.5	

CIRCUIT MODIFICATIONS ARE NOT TO BE MADE WITHOUT AUTHORITY FROM THE OFFICE OF SIGNAL DESIGN

Date: 09/27/12
Des: NST
Chk: NBT
AFE: 10804

UNION PACIFIC RAILROAD
SHIPMAN, ILLINOIS
FIELD CROSSING
SPRINGFIELD SUBDIVISION
Office of AVP Engineering - Signal Omaha, Nebraska

Sh.: 14
DOT 294410K
MP: 240.71
ID: CSL24071.14X

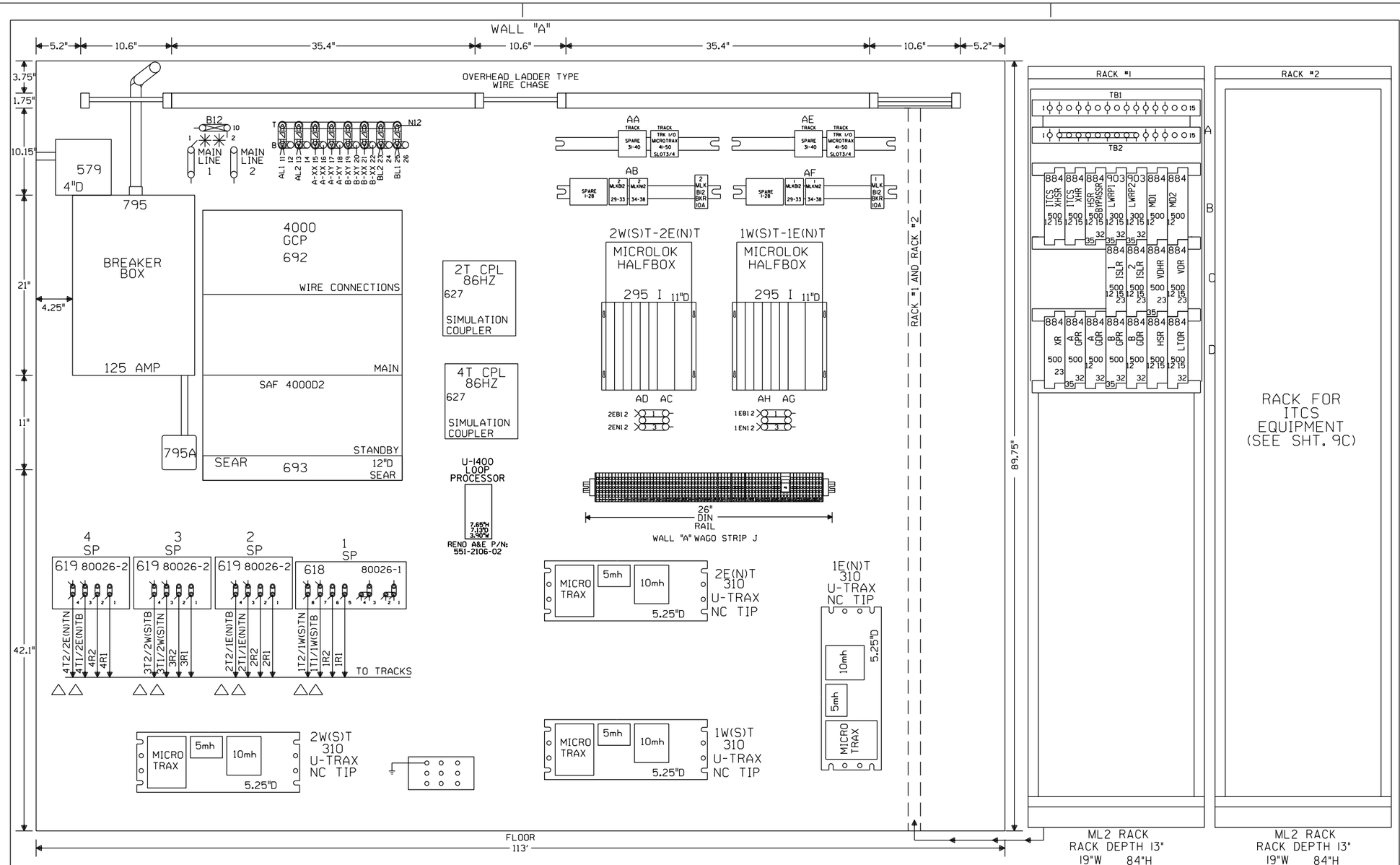

NEW SHEET

Designed: 09/27/12
TIER 1S PHASE 1
M.P. 239.70 TO M.P. 255.35 TO UPGRADE XING TO 4 QUAD WITH EGMS, VARIOUS C.P.'S
Rec*: WO*: 10804
1S: NBT /
/NST/MJF

CIRCUIT MODIFICATIONS ARE NOT TO BE MADE WITHOUT AUTHORITY FROM THE OFFICE OF SIGNAL DESIGN

Date:	09/27/12
Des:	NST
Chk:	NBT
AFE:	10804

UNION PACIFIC RAILROAD

SHIPMAN, ILLINOIS
FIELD CROSSING
SPRINGFIELD SUBDIVISION

Office of AVP Engineering - Signal — Omaha, Nebraska

Sh.:	15
DOT	294410K
MP:	240.71
ID:	CSL24071.15X

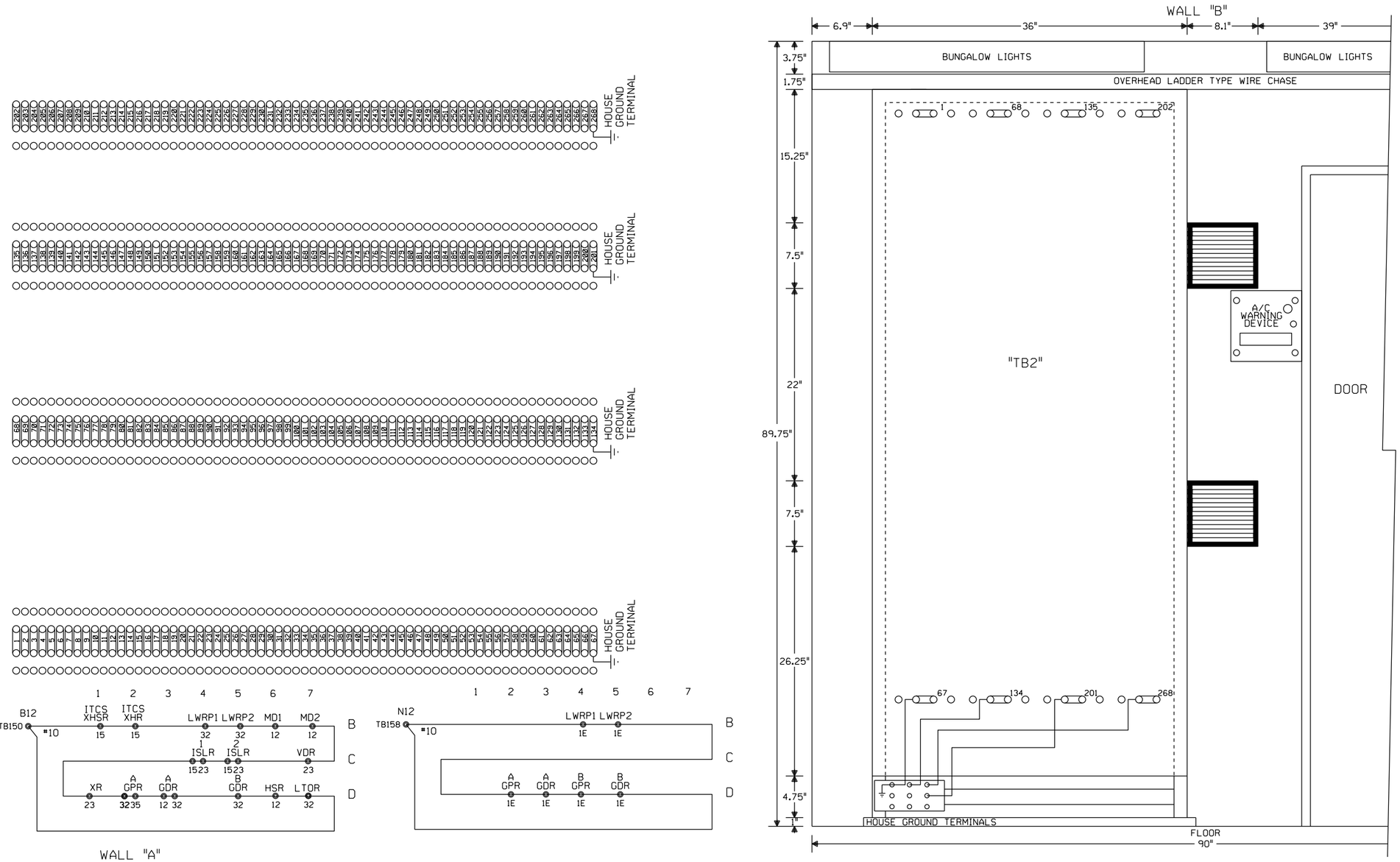

NEW SHEET

Designed: 09/27/12
TIER IS PHASE 1 M.P. 239.70 TO M.P. 255.35 TO UPGRADE XING TO 4 QUAD WITH EGMS, VARIOUS C.P.'S
Rec#: WO#: 10804
IS: NBT / / /NST/MJF

CIRCUIT MODIFICATIONS ARE NOT TO BE MADE WITHOUT AUTHORITY FROM THE OFFICE OF SIGNAL DESIGN

Date:	09/27/12
Des:	NST
Chk:	NBT
AFE:	10804

UNION PACIFIC RAILROAD

SHIPMAN, ILLINOIS
FIELD CROSSING
SPRINGFIELD SUBDIVISION

Office of AVP Engineering - Signal Omaha, Nebraska

Sh.:	16
DOT	294410K
MP:	240.71
ID:	CSL24071.16X

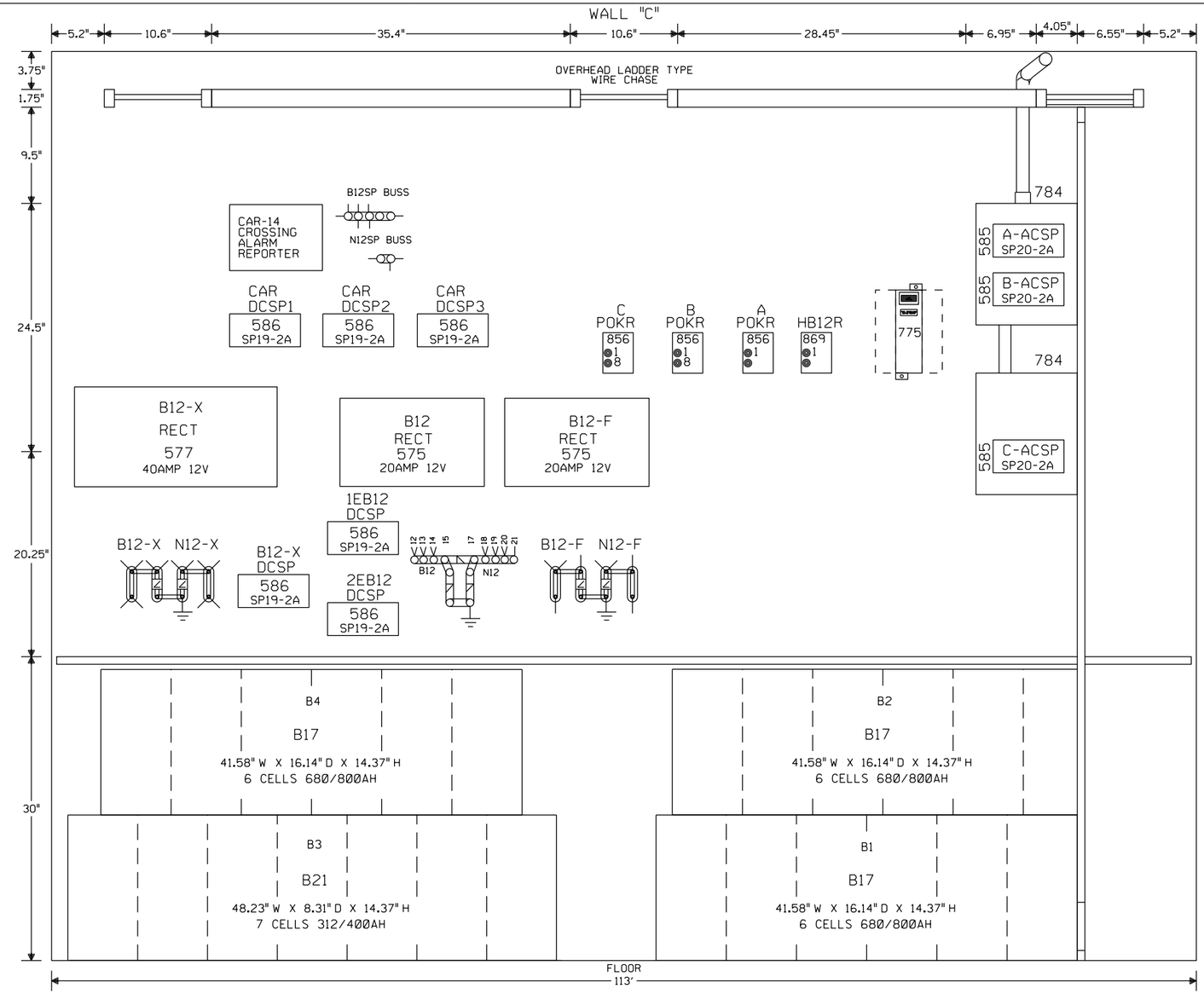

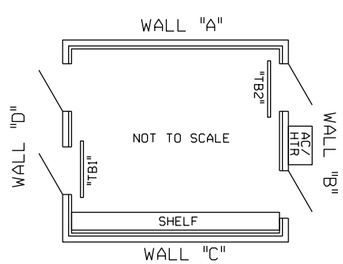

NOTE: ALL DIMENSIONS SHOWN ARE APPROXIMATE.

0 1 2 3 4 FEET

SCALE: 1.5 INCHES = 1 FOOT

NEW SHEET

Designed: 09/27/12
TIER IS PHASE I M.P. 239.70 TO M.P. 255.35 TO UPGRADE XING TO 4 QUAD WITH EGMS, VARIOUS C.P.'S
Rec'd: WO#: 10804
IS: NBT / / /NST/MJF

CIRCUIT MODIFICATIONS ARE NOT TO BE MADE WITHOUT AUTHORITY FROM THE OFFICE OF SIGNAL DESIGN

Date: 09/27/12	
Des:	NST
Chk:	NBT
AFE:	10804

UNION PACIFIC RAILROAD

SHIPMAN, ILLINOIS
FIELD CROSSING
SPRINGFIELD SUBDIVISION

Office of AVP Engineering - Signal — Omaha, Nebraska

Sh.:	17
DOT	294410K
MP:	240.71
ID:	CSL24071.17X

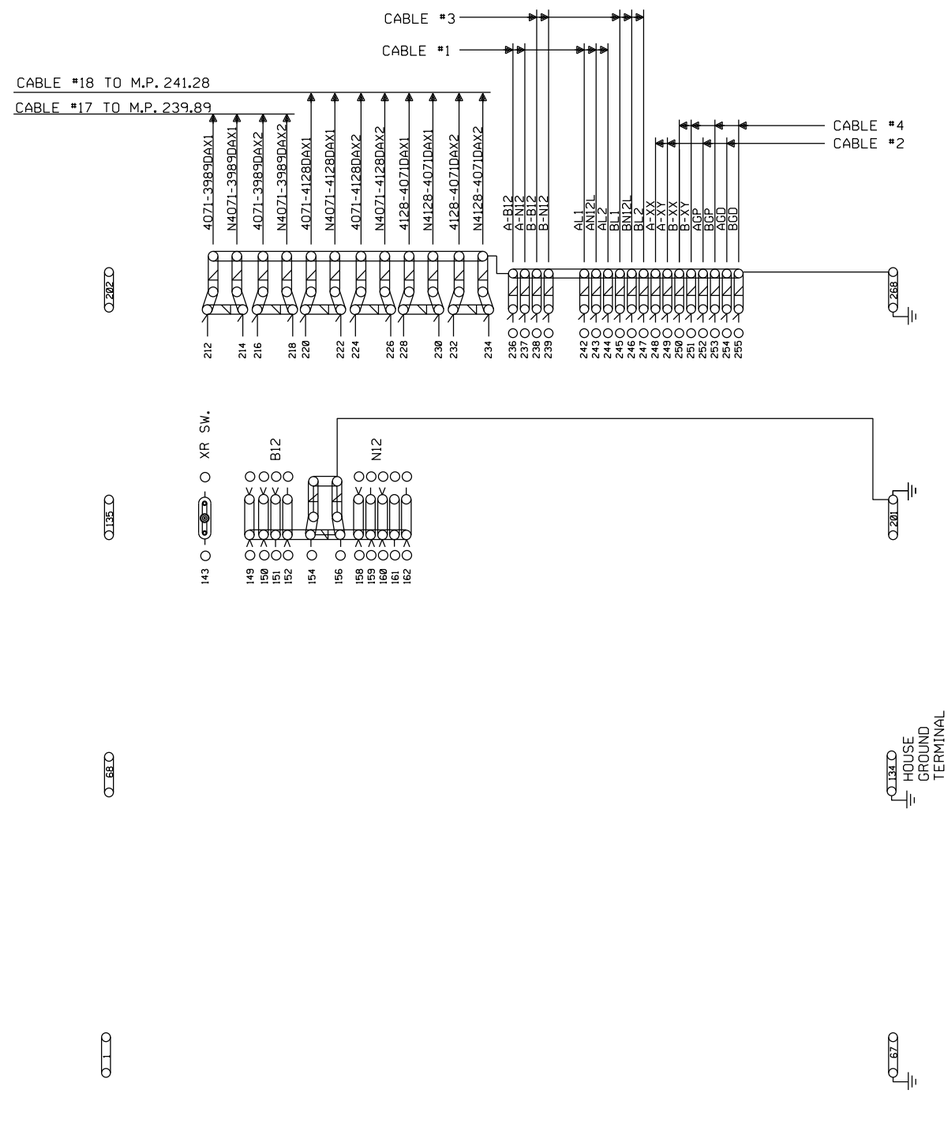

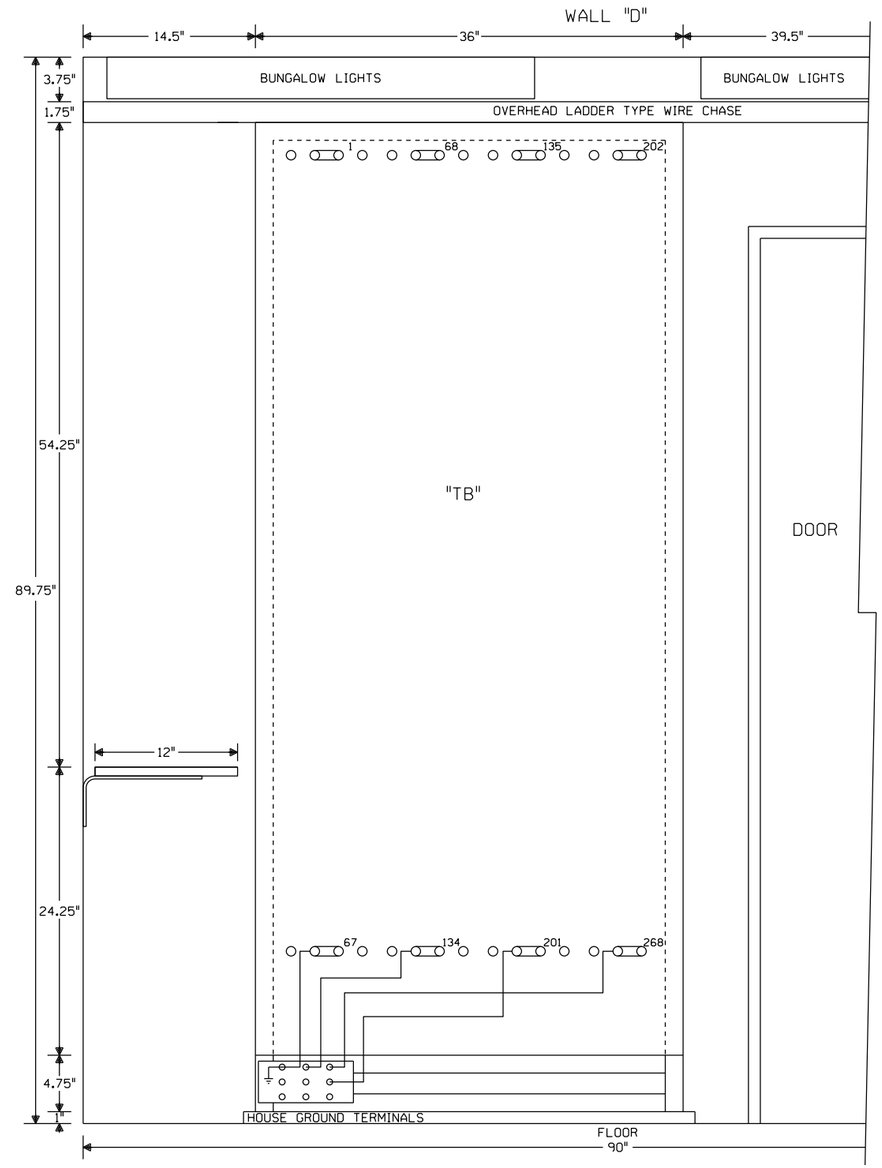

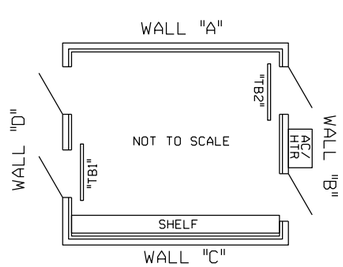

NOTE: ALL DIMENSIONS SHOWN ARE APPROXIMATE.

0 1 2 3 4 FEET

SCALE: 1.5 INCHES = 1 FOOT

NEW SHEET

Designed: 09/27/12
TIER 1S PHASE 1 M.P. 239.70 TO M.P. 255.35 TO UPGRADE XING TO 4 QUAD WITH EGMS, VARIOUS C.P.'S
Rec*: WO*: 10804
1S: NBT /
/ /NST/MJF

CIRCUIT MODIFICATIONS ARE NOT TO BE MADE WITHOUT AUTHORITY FROM THE OFFICE OF SIGNAL DESIGN

Date:	09/27/12
Des:	NST
Chk:	NBT
AFE:	10804

UNION PACIFIC RAILROAD

SHIPMAN, ILLINOIS
FIELD CROSSING
SPRINGFIELD SUBDIVISION

Office of AVP Engineering - Signal — Omaha, Nebraska

Sh.:	18
DOT	294410K
MP:	240.71
ID:	CSL24071.18X