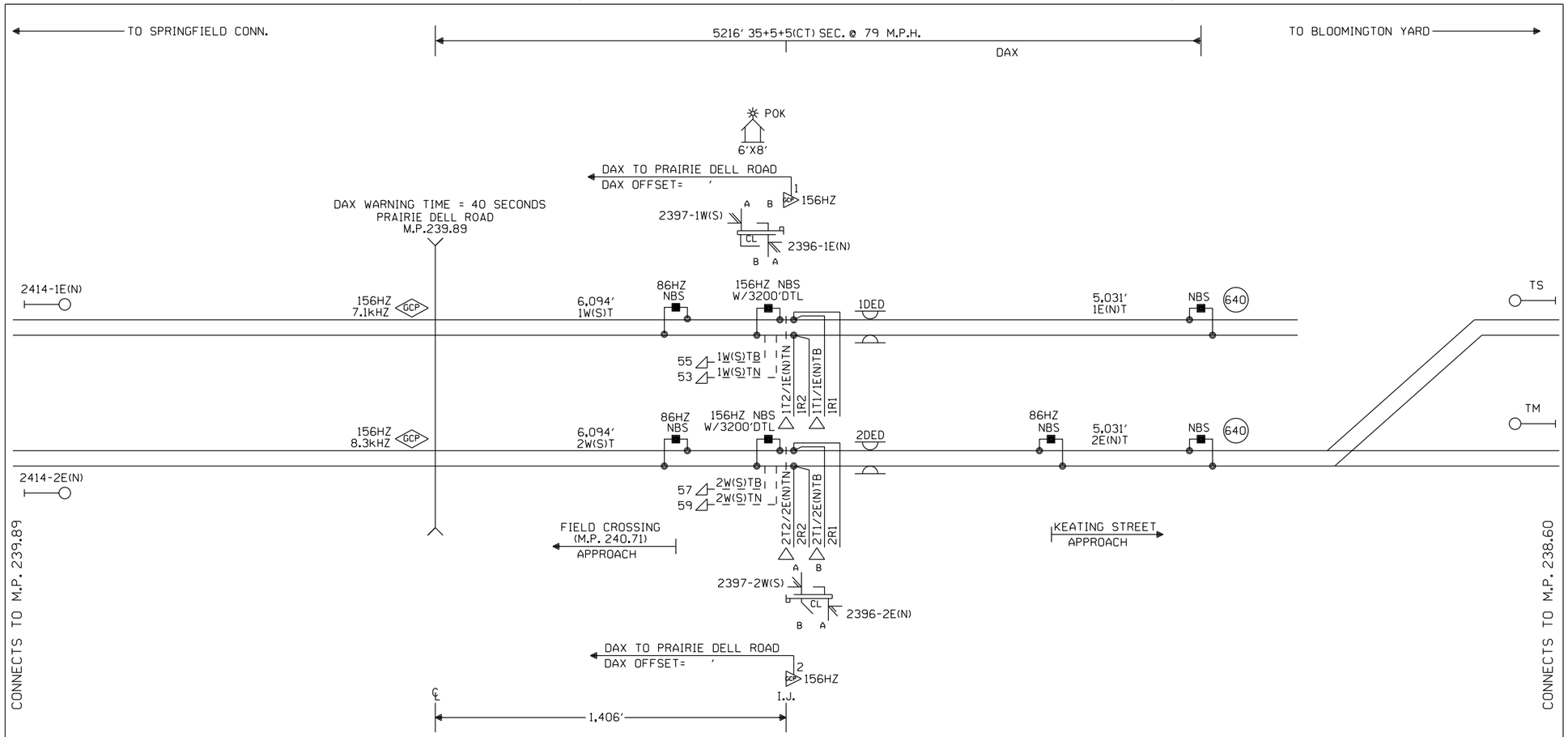


CONSTRUCTION NOTE:

1. WIRE SHOP TO WIRE FOR ALL TRACK PANELS AS SHOWN.
2. RELAY PLUGBOARDS TO BE INSTALLED EVEN IF RELAY NOT REQUIRED.
3. TRACK 1 SIGNALS AND TRACK CONNECTIONS WILL BE INSTALLED IN PHASE 1, BUT NOT PUT IN SERVICE UNTIL PHASE 2.
4. ORDER TAB 285 CABLE FOR MICROLOK II ECODE TRACK CARD.

NOTES:

⊗ = TWISTED WIRES

ALL WIRING TO TRACK 2C. NO.6 U.G.B.T. CABLE UNLESS OTHERWISE SPECIFIED.

ALL CASE WIRING TO BE NO.16 UNLESS OTHERWISE SPECIFIED.

ALL GROUND CONNECTIONS TO BE #6 OR LARGER. SIGNAL WIRING SHOP TO RUN ALL GROUND CONNECTIONS.

PORTABLE GENERATOR EXTENSION CORD FOR 240V TO 240V IS PROVIDED AS WELL AS A 120V TO 240V ADAPTER.

△ = ENSURE TRACK POLARITY IS TRANSPOSED ACROSS ALL INSULATED JOINTS.

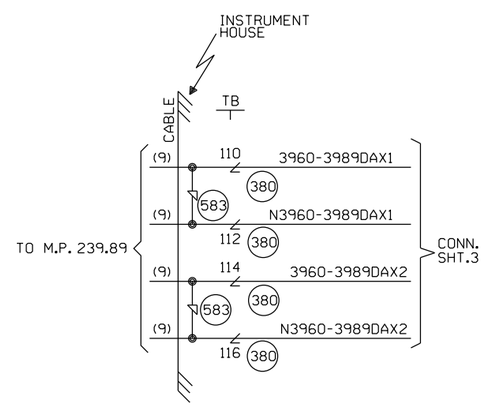


W(S) ← → E(N)

CABLE TABULATION

CABLE NO.9 7C#14 U.G.B.T. HOUSE TO MP. 239.89

NEW SHEET

| | | | | | | | | | | | |
|---|---|---|---|---|---|---|---|---|---|---|---|
| | | | | | Designed: 09/27/12 TIER 1S PHASE 1 M.P. 239.70 TO M.P. 255.35 TO UPGRADE XING TO 4 QUAD WITH EGMS, VARIOUS C.P.'S Rec'd: WO#: 10804 1S: NBT / / / NST/MJF | MODIFICATION LEVEL | | CIRCUIT MODIFICATIONS ARE NOT TO BE MADE WITHOUT AUTHORITY FROM THE OFFICE OF SIGNAL DESIGN | Date: 09/27/12 | UNION PACIFIC RAILROAD | Sh.: 1 |
| | | | | | | O. A. LAST LEVEL CHECKED | DU | | Des: NST | | |
| | | | | | | LAST LEVEL MOD THIS TYPICAL | DU | | Chk: NBT | TWO TRACK INTERMEDIATE SPRINGFIELD SUBDIVISION | MP: 239.60 |
| | | | | | | LAST LEVEL BY DESIGNER | DU | | | | |
| | | | | | | CHANGED FROM TYPICAL? | Y | | AFE: 10804 | Office of AVP Engineering - Signal Omaha, Nebraska | ID: CSL23960.1S |
| | | | | | | REV 01.24.11 4K REMOTE.1 | | | | | |

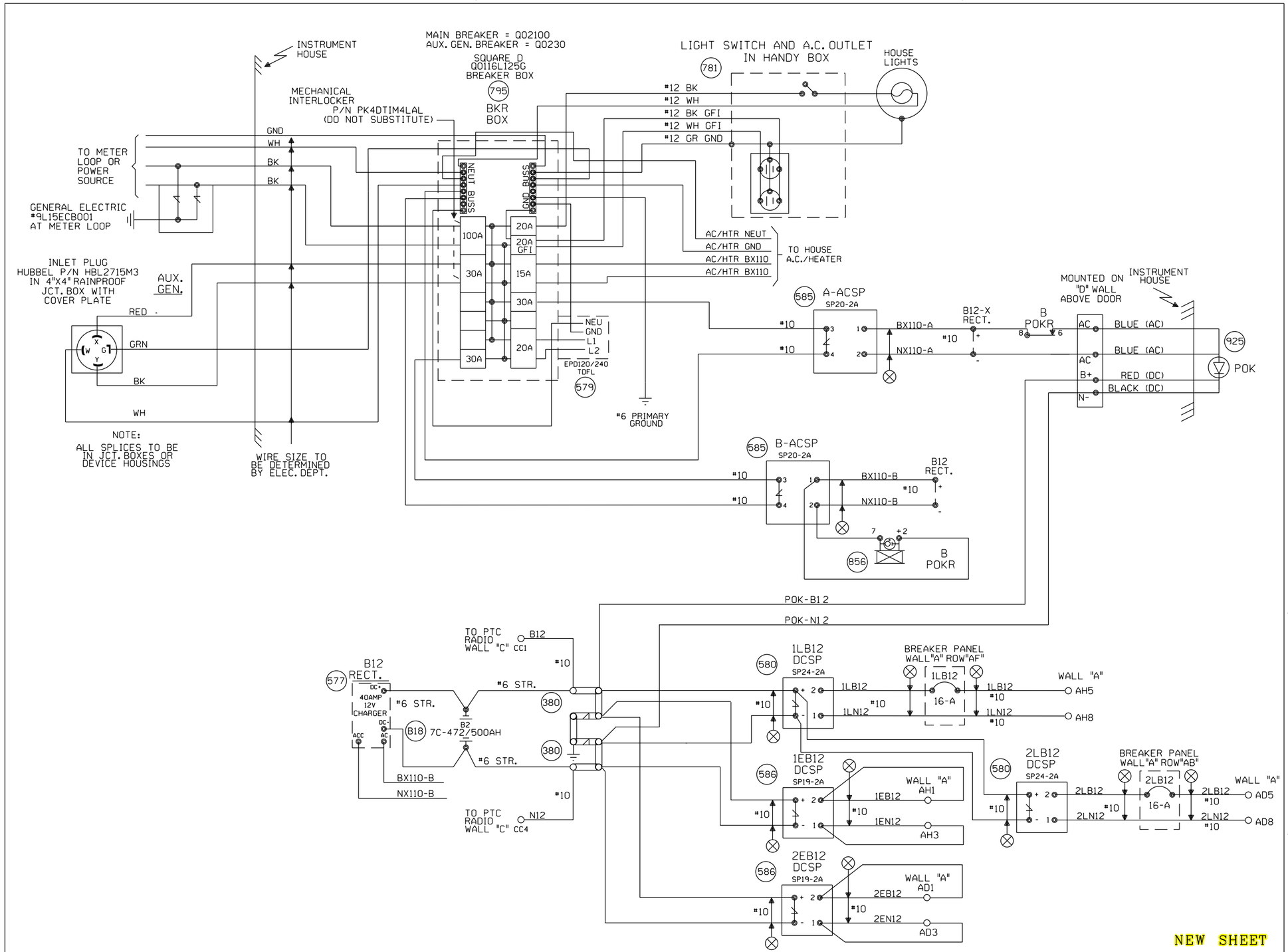


Designed: 09/27/12

TIER 1S PHASE 1 M.P. 239.70 TO M.P. 255.35 TO UPGRADE XING TO 4 QUAD WITH EGMS, VARIOUS C.P.'S

Rec: NBT / WO: 10804
IS: / / NST/MJF

| MODIFICATION LEVEL | |
|---|---|
| O. A. LAST LEVEL CHECKED | DU |
| LAST LEVEL MOD THIS TYPICAL | DU |
| LAST LEVEL BY DESIGNER | DU |
| CHANGED FROM TYPICAL? | Y |

REV 01.24.11 4K SEARAC.2

CIRCUIT MODIFICATIONS ARE NOT TO BE MADE WITHOUT AUTHORITY FROM THE OFFICE OF SIGNAL DESIGN

Date: 09/27/12
Des: NST
Chk: NBT
AFE: 10804

# UNION PACIFIC RAILROAD

TWO TRACK INTERMEDIATE
SPRINGFIELD SUBDIVISION

Office of AVP Engineering - Signal — Omaha, Nebraska

Sh.: 2
MP: 239.60
ID: CSL23960.2S

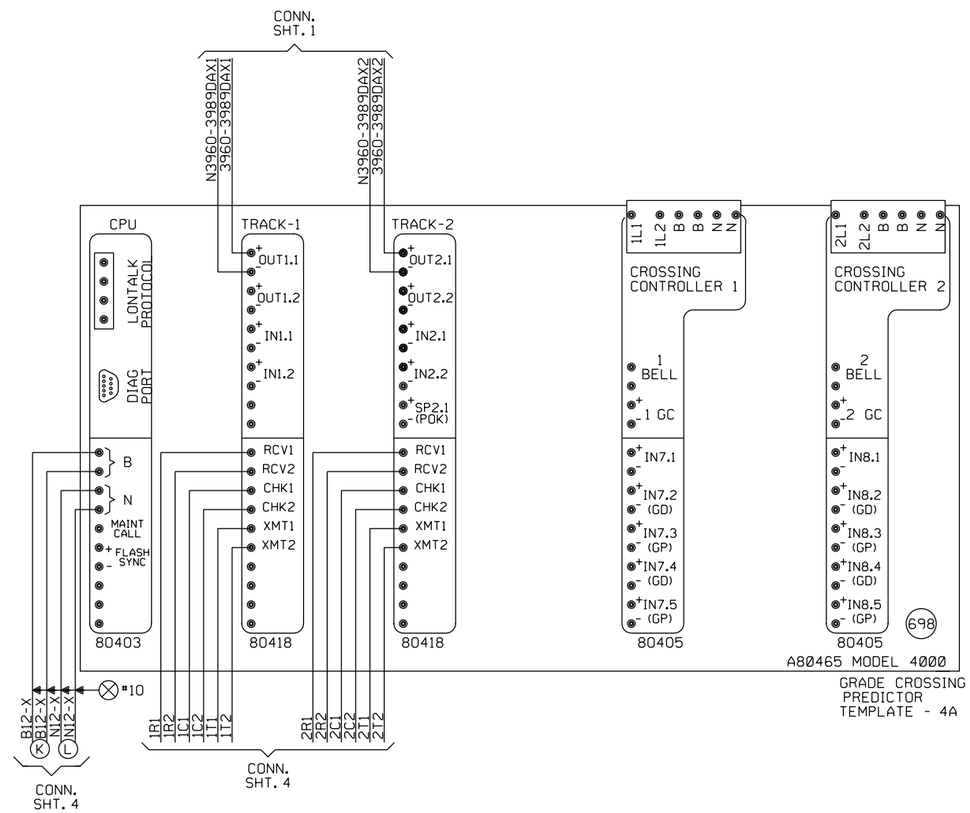


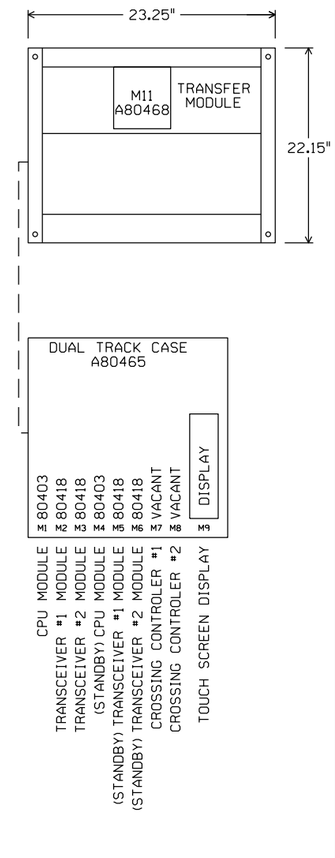


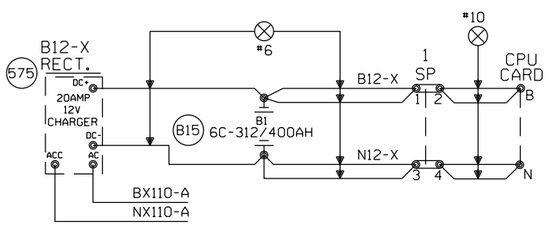


| "Mf" FREQUENCY (HZ) | MAXIMUM TRANSMIT WIRE LENGTH (FEET) |
|---|---|
| 86 | 100 |
| 114 | 125 |
| 156 | 150 |
| 211 | 200 |
| 285-970 | 250 |

NOTE:
EACH TRANSMITTER TO RAIL WIRE FROM XMT1 AND XMT2 MUST NOT EXCEED THE MAXIMUM LENGTH SPECIFIED IN THE TABLE SHOWN. THE RECEIVER WIRE LENGTH IS NOT CRITICAL. DOES NOT APPLY TO 6 TRACK WIRE APPLICATION.

NEW SHEET

Designed: 09/27/12
TIER 1S PHASE 1 M.P. 239.70 TO M.P. 255.35 TO UPGRADE XING TO 4 QUAD WITH EGMS, VARIOUS C.P.'S
Rec'd: WO#: 10804
1S: NBT / / / NST/MJF

| MODIFICATION LEVEL | |
|---|---|
| O. A. LAST LEVEL CHECKED | DU |
| LAST LEVEL MOD THIS TYPICAL | DU |
| LAST LEVEL BY DESIGNER | DU |
| CHANGED FROM TYPICAL? | Y |

REV 01.24.11 4K 2TKGF.3

CIRCUIT MODIFICATIONS ARE NOT TO BE MADE WITHOUT AUTHORITY FROM THE OFFICE OF SIGNAL DESIGN

Date: 09/27/12
Des: NST
Chk: NBT
AFE: 10804

UNION PACIFIC RAILROAD

TWO TRACK INTERMEDIATE
SPRINGFIELD SUBDIVISION

Office of AVP Engineering - Signal Omaha, Nebraska

Sh.: 3
MP: 239.60
ID: CSL23960.3X

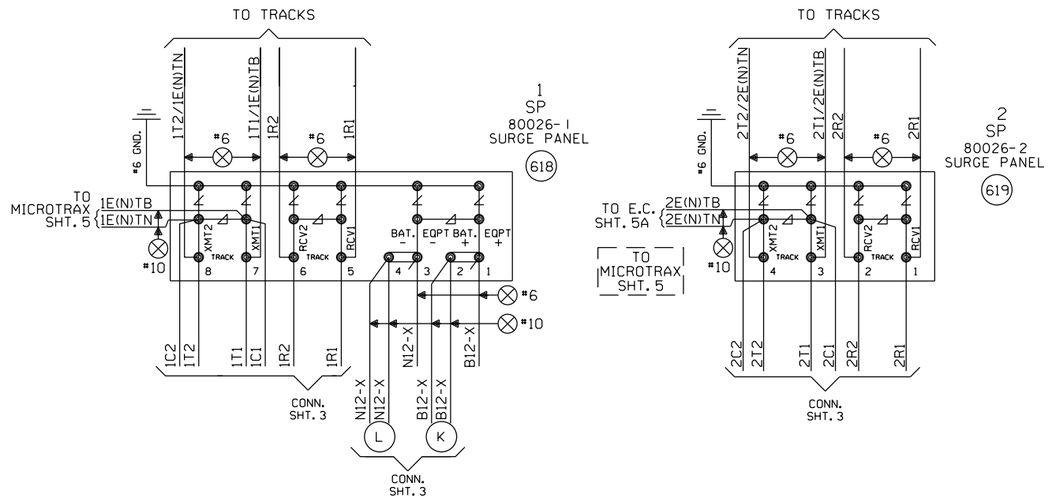


— — = FUTURE. TO BE WIRED AND CONNECTED IN PHASE 2.

NEW SHEET

Designed: 09/27/12

TIER IS PHASE 1 M.P. 239.70 TO M.P. 255.35 TO UPGRADE XING TO 4 QUAD WITH EGMS, VARIOUS C.P.'S

Rec': WO#: 10804
IS: NBT / / NST/MJF

| MODIFICATION LEVEL | |
|---|---|
| O.A. LAST LEVEL CHECKED | DU |
| LAST LEVEL MOD THIS TYPICAL | DU |
| LAST LEVEL BY DESIGNER | DU |
| CHANGED FROM TYPICAL? | Y |

REV 01.24.11 4K REMOTE.4

CIRCUIT MODIFICATIONS ARE NOT TO BE MADE WITHOUT AUTHORITY FROM THE OFFICE OF SIGNAL DESIGN

Date: 09/27/12
Des: NST
Chk: NBT
AFE: 10804

UNION PACIFIC RAILROAD

TWO TRACK INTERMEDIATE
SPRINGFIELD SUBDIVISION

Office of AVP Engineering - Signal Omaha, Nebraska

Sh.: 4
MP: 239.60
ID: CSL23960.4X

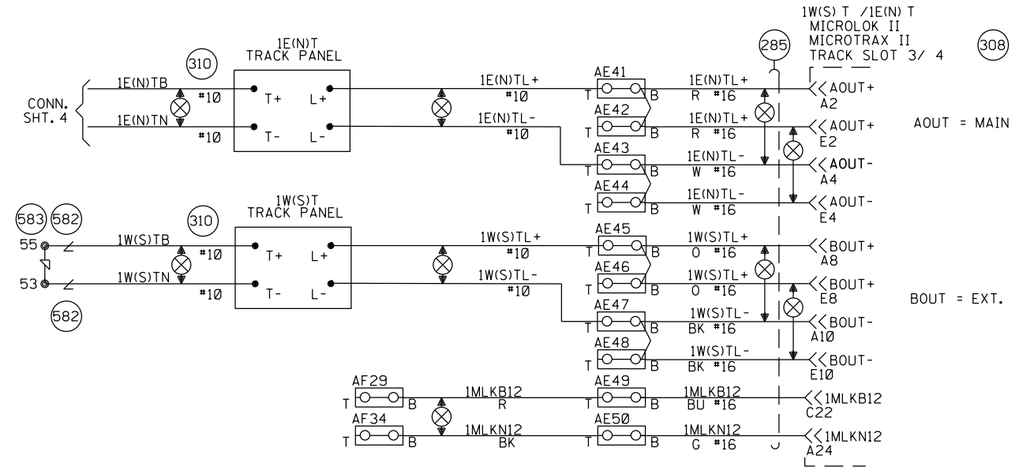


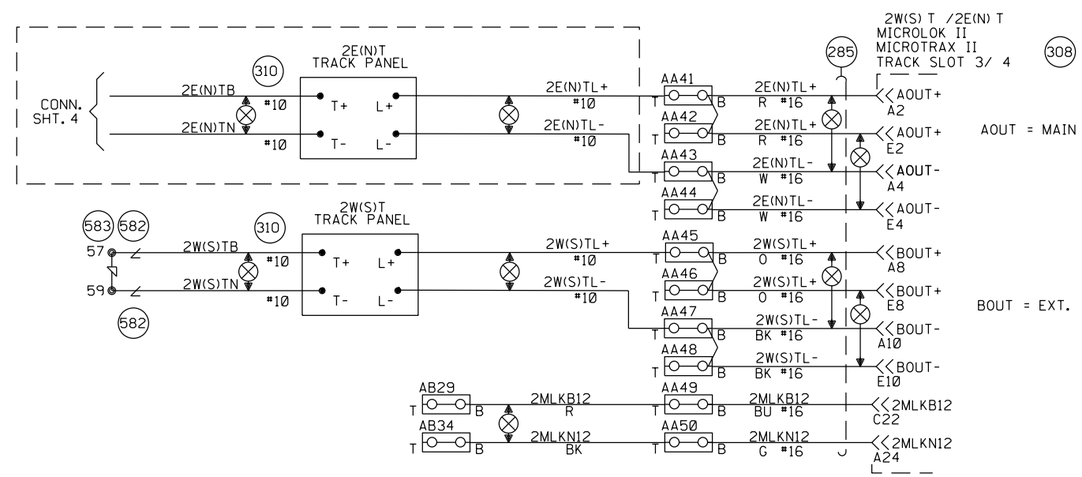


NOTES:

EAST= (N)ORTH.
WEST= (S)OUTH.

⊘ = OBSERVE CORRECT POLARITY. EQUIPMENT WILL BE DAMAGED IF CONNECTIONS ARE REVERSED

⧖ = TEST TERMINALS MUST BE INSTALLED ON ALL WIRING CONNECTED TO EXTERNAL CABLES (EXCEPT TRACK AND A.C. POWER WIRES).

ENSURE TRACK POLARITY IS TRANSPOSED ACROSS ALL INSULATED JOINTS.

SHOW ACTUAL DED INSTALLED LOCATION ON DRAWING.

— — = FUTURE, TO BE WIRED AND CONNECTED IN PHASE 2.

NEW SHEET

Designed: 09/27/12
TIER IS PHASE 1 M.P. 239.70 TO M.P. 255.35 TO UPGRADE XING TO 4 QUAD WITH EGMS, VARIOUS C.P.'S
Rec*: WO*: 10804
IS: NBT / / NST/MJF

| MODIFICATION LEVEL | |
|---|---|
| O. A. LAST LEVEL CHECKED | DU |
| LAST LEVEL MOD THIS TYPICAL | DU |
| LAST LEVEL BY DESIGNER | DU |
| CHANGED FROM TYPICAL? | Y |

REV 8/20/10 1TMLHBINTU.1

CIRCUIT MODIFICATIONS ARE NOT TO BE MADE WITHOUT AUTHORITY FROM THE OFFICE OF SIGNAL DESIGN

Date: 09/27/12
Des: NST
Chk: NBT
AFE: 10804

UNION PACIFIC RAILROAD

TWO TRACK INTERMEDIATE
SPRINGFIELD SUBDIVISION

Office of AVP Engineering - Signal Omaha, Nebraska

Sh.: 5
MP: 239.60
ID: CSL23960.5S

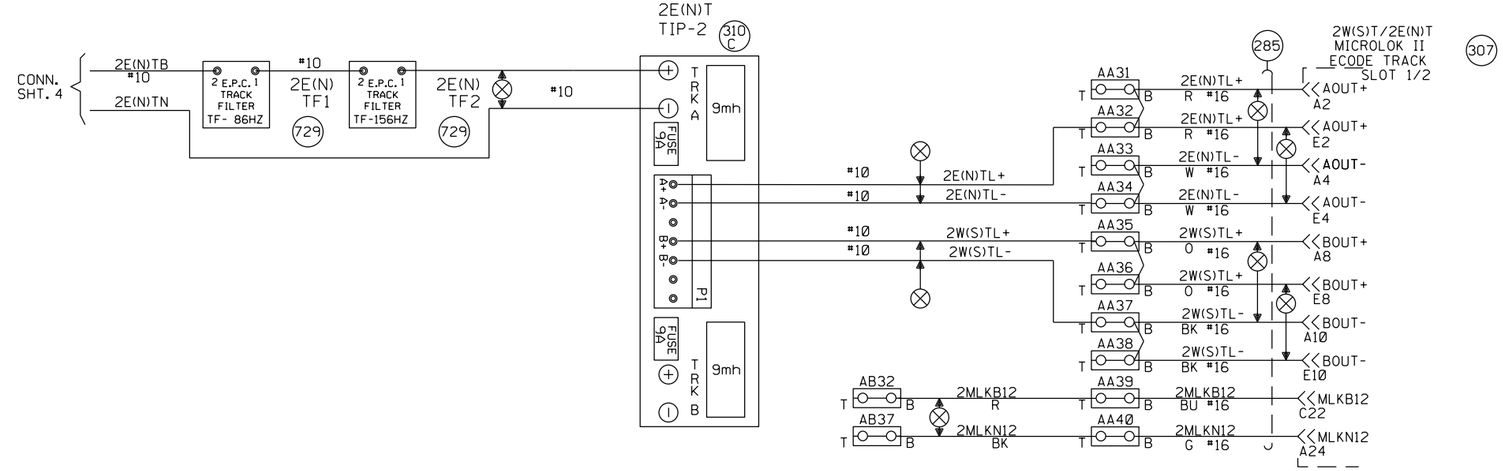


NOTE:

CIRCUITS AND EQUIPMENT TO BE REMOVED IN PHASE 2.

NEW SHEET

Designed: 09/27/12

TIER IS PHASE 1 M.P. 239.70 TO M.P. 255.35 TO UPGRADE XING TO 4 QUAD WITH EGMS, VARIOUS C.P.'S

Rec*: WO*: 10804
IS: NBT / / NST/MJF

| MODIFICATION LEVEL | |
|---|---|
| O. A. LAST LEVEL CHECKED | DU |
| LAST LEVEL MOD THIS TYPICAL | DU |
| LAST LEVEL BY DESIGNER | DU |
| CHANGED FROM TYPICAL? | Y |

REV 8/20/10 1TMLHBINTU.1

CIRCUIT MODIFICATIONS ARE NOT TO BE MADE WITHOUT AUTHORITY FROM THE OFFICE OF SIGNAL DESIGN

Date: 09/27/12
Des: NST
Chk: NBT
AFE: 10804

UNION PACIFIC RAILROAD

TWO TRACK INTERMEDIATE
SPRINGFIELD SUBDIVISION

Office of AVP Engineering - Signal — Omaha, Nebraska

Sh.: 5A
MP: 239.60
ID: CSL23960.5AS

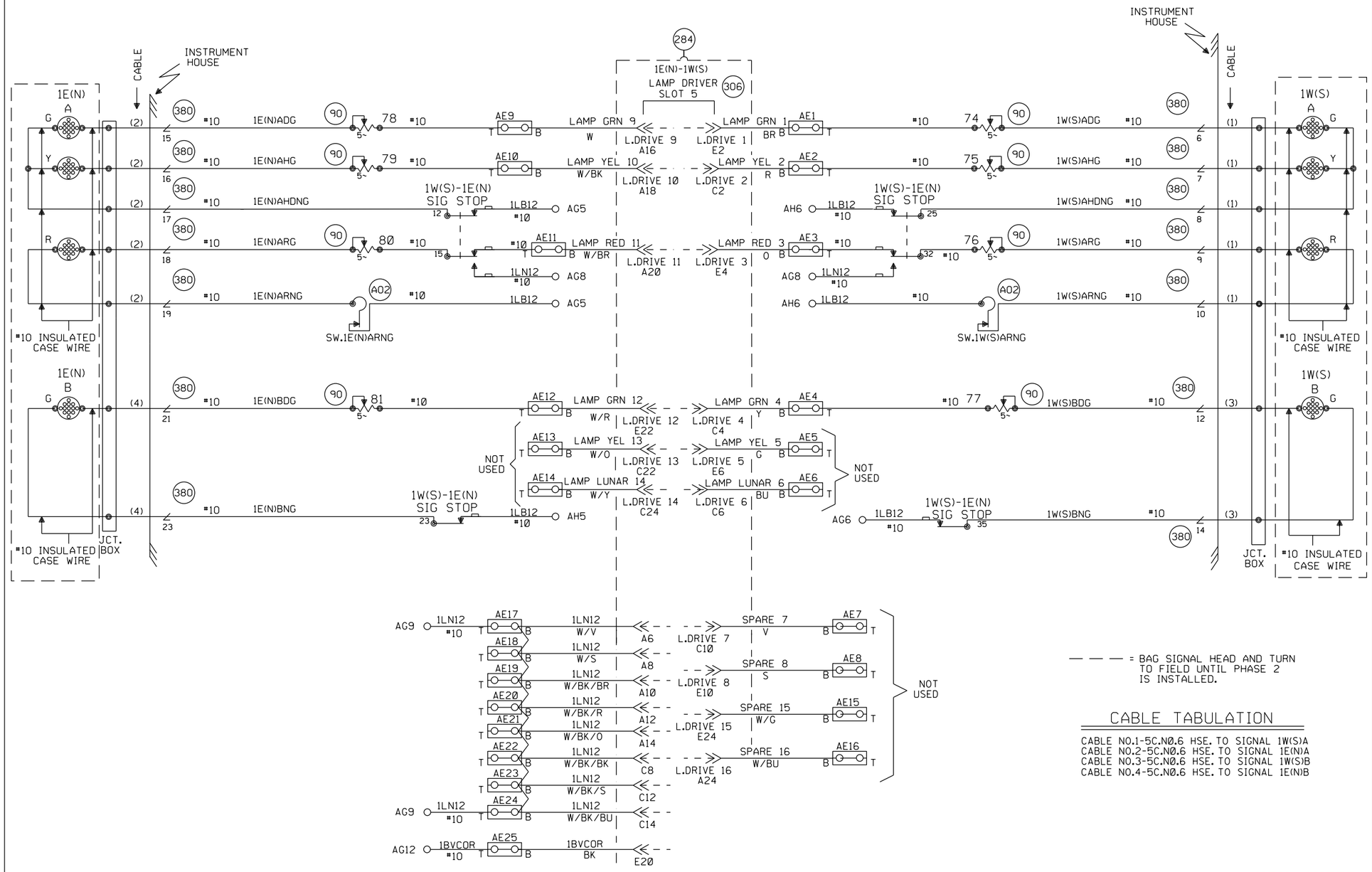


— — — = BAG SIGNAL HEAD AND TURN TO FIELD UNTIL PHASE 2 IS INSTALLED.

## CABLE TABULATION

CABLE NO.1-5C.N0.6 HSE. TO SIGNAL 1W(S)A
CABLE NO.2-5C.N0.6 HSE. TO SIGNAL 1E(N)A
CABLE NO.3-5C.N0.6 HSE. TO SIGNAL 1W(S)B
CABLE NO.4-5C.N0.6 HSE. TO SIGNAL 1E(N)B

**NEW SHEET**

Designed: 09/27/12
TIER IS PHASE 1 M.P. 239.70 TO M.P. 255.35 TO UPGRADE XING TO 4 QUAD WITH EGMS, VARIOUS C.P.'S
Rec'd: w0#: 10804
IS: NBT / / NST/MJF

| MODIFICATION LEVEL | |
|---|---|
| O. A. LAST LEVEL CHECKED | DU |
| LAST LEVEL MOD THIS TYPICAL | DU |
| LAST LEVEL BY DESIGNER | DU |
| CHANGED FROM TYPICAL? | Y |

REV 8/20/10 1TMLHBINTUGS.3

CIRCUIT MODIFICATIONS ARE NOT TO BE MADE WITHOUT AUTHORITY FROM THE OFFICE OF SIGNAL DESIGN

Date: 09/27/12
Des: NST
Chk: NBT
AFE: 10804

**UNION PACIFIC RAILROAD**

TWO TRACK INTERMEDIATE
SPRINGFIELD SUBDIVISION

Office of AVP Engineering - Signal — Omaha, Nebraska

Sh.: 6
MP: 239.60
ID: CSL23960.6S

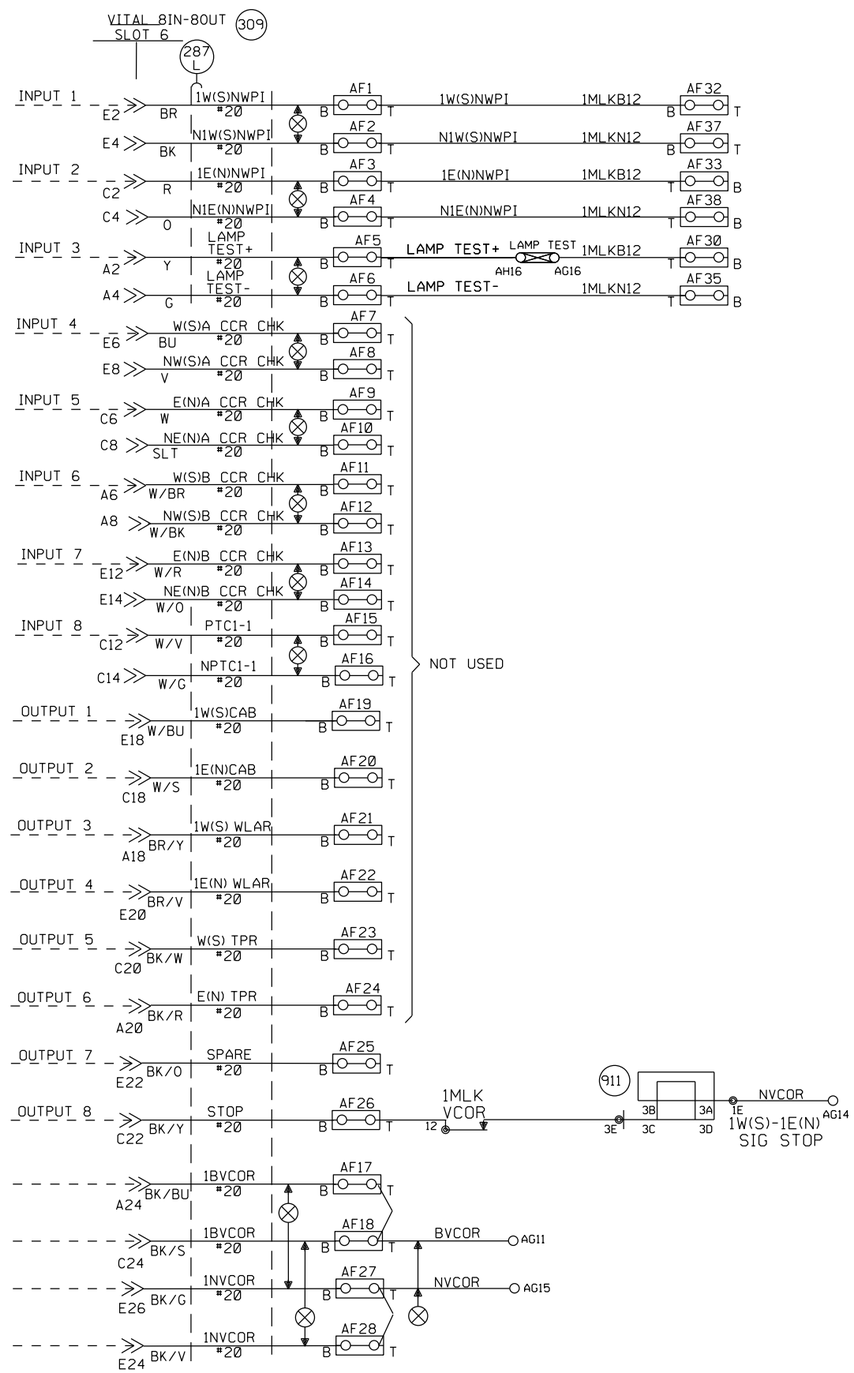


1W(S)-1E(N)T

**NEW SHEET**

| | | | | | | | | | | |
|---|---|---|---|---|---|---|---|---|---|---|
| | | | | | Designed: 09/27/12<br>TIER 1S PHASE 1<br>M.P. 239.70 TO M.P. 255.35 TO UPGRADE XING TO 4 QUAD WITH EGMS, VARIOUS C.P.'S<br>Req'd: WO#: 10804<br>1S: NBT / / NST/MJF | MODIFICATION LEVEL | | CIRCUIT MODIFICATIONS ARE NOT TO BE MADE WITHOUT AUTHORITY FROM THE OFFICE OF SIGNAL DESIGN | Date: 09/27/12<br>Des: NST<br>Chk: NBT<br>AFE: 10804 | **UNION PACIFIC RAILROAD**<br>TWO TRACK INTERMEDIATE<br>SPRINGFIELD SUBDIVISION<br>Office of AVP Engineering - Signal Omaha, Nebraska | Sh.: 6A<br>MP: 239.60<br>ID: CSL23960.6AS |
| | | | | | | D. A. LAST LEVEL CHECKED | DU | | | |
| | | | | | | LAST LEVEL MOD THIS TYPICAL | DU | | | |
| | | | | | | LAST LEVEL BY DESIGNER | DU | | | |
| | | | | | | CHANGED FROM TYPICAL? | Y | | | |
| | | | | | | REV 8/20/10 1TMLHBINTU. 3A | | | | |

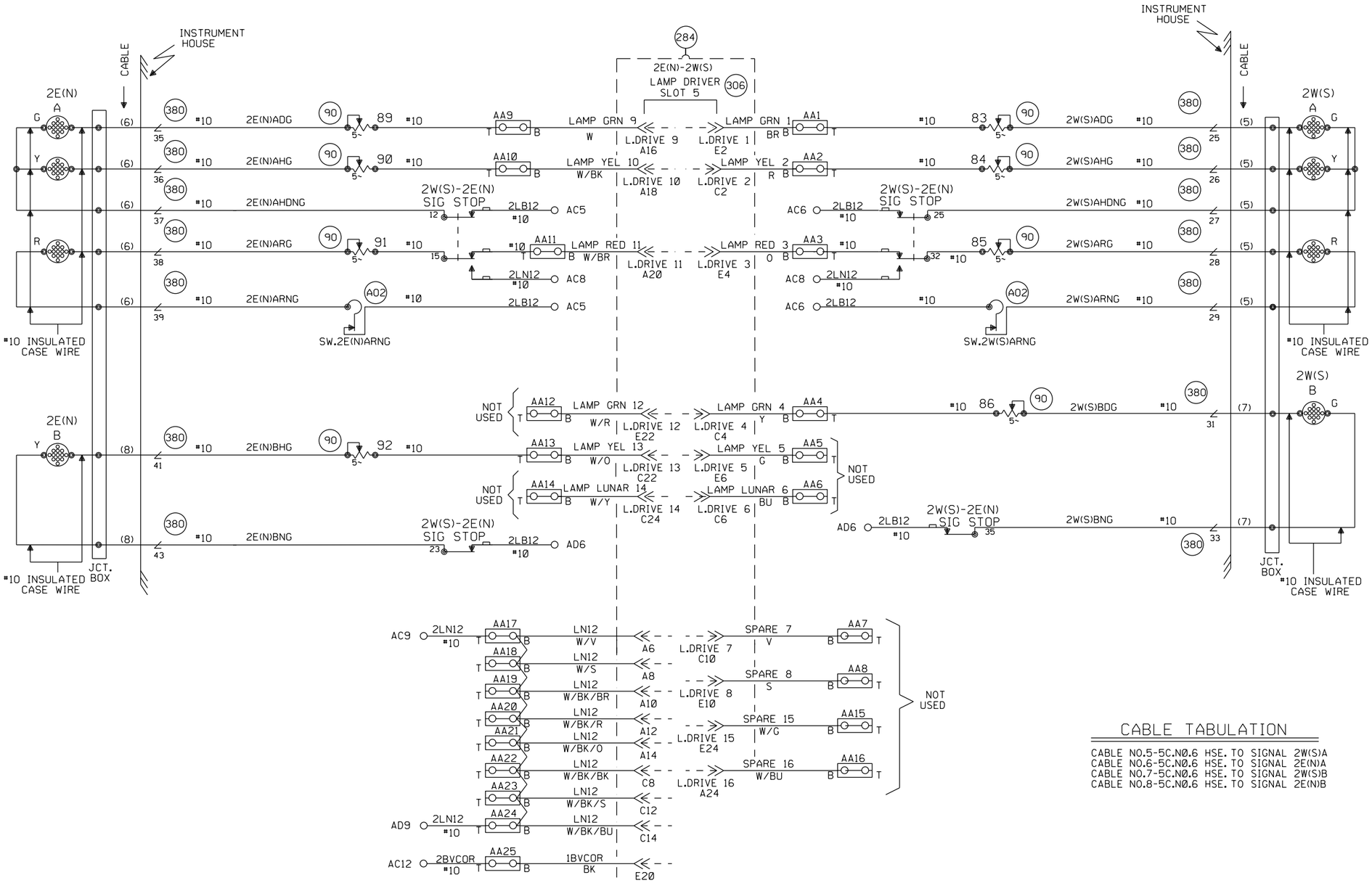


## CABLE TABULATION

CABLE NO.5-5C.N0.6 HSE. TO SIGNAL 2W(S)A
CABLE NO.6-5C.N0.6 HSE. TO SIGNAL 2E(N)A
CABLE NO.7-5C.N0.6 HSE. TO SIGNAL 2W(S)B
CABLE NO.8-5C.N0.6 HSE. TO SIGNAL 2E(N)B

Designed: 09/27/12
TIER IS PHASE I M.P. 239.70 TO M.P. 255.35 TO UPGRADE XING TO 4 QUAD WITH EGMS, VARIOUS C.P.'S
Rec*: WO#: 10804
IS: NBT / / NST/MJF

| MODIFICATION LEVEL | |
|---|---|
| O. A. LAST LEVEL CHECKED | DU |
| LAST LEVEL MOD THIS TYPICAL | DU |
| LAST LEVEL BY DESIGNER | DU |
| CHANGED FROM TYPICAL? | Y |

REV 8/20/10 1TMLHBINTUGS.3

CIRCUIT MODIFICATIONS ARE NOT TO BE MADE WITHOUT AUTHORITY FROM THE OFFICE OF SIGNAL DESIGN

Date: 09/27/12
Des: NST
Chk: NBT
AFE: 10804

**UNION PACIFIC RAILROAD**

TWO TRACK INTERMEDIATE
SPRINGFIELD SUBDIVISION

Office of AVP Engineering - Signal Omaha, Nebraska

Sh.: 7
MP: 239.60
ID: CSL23960.7S

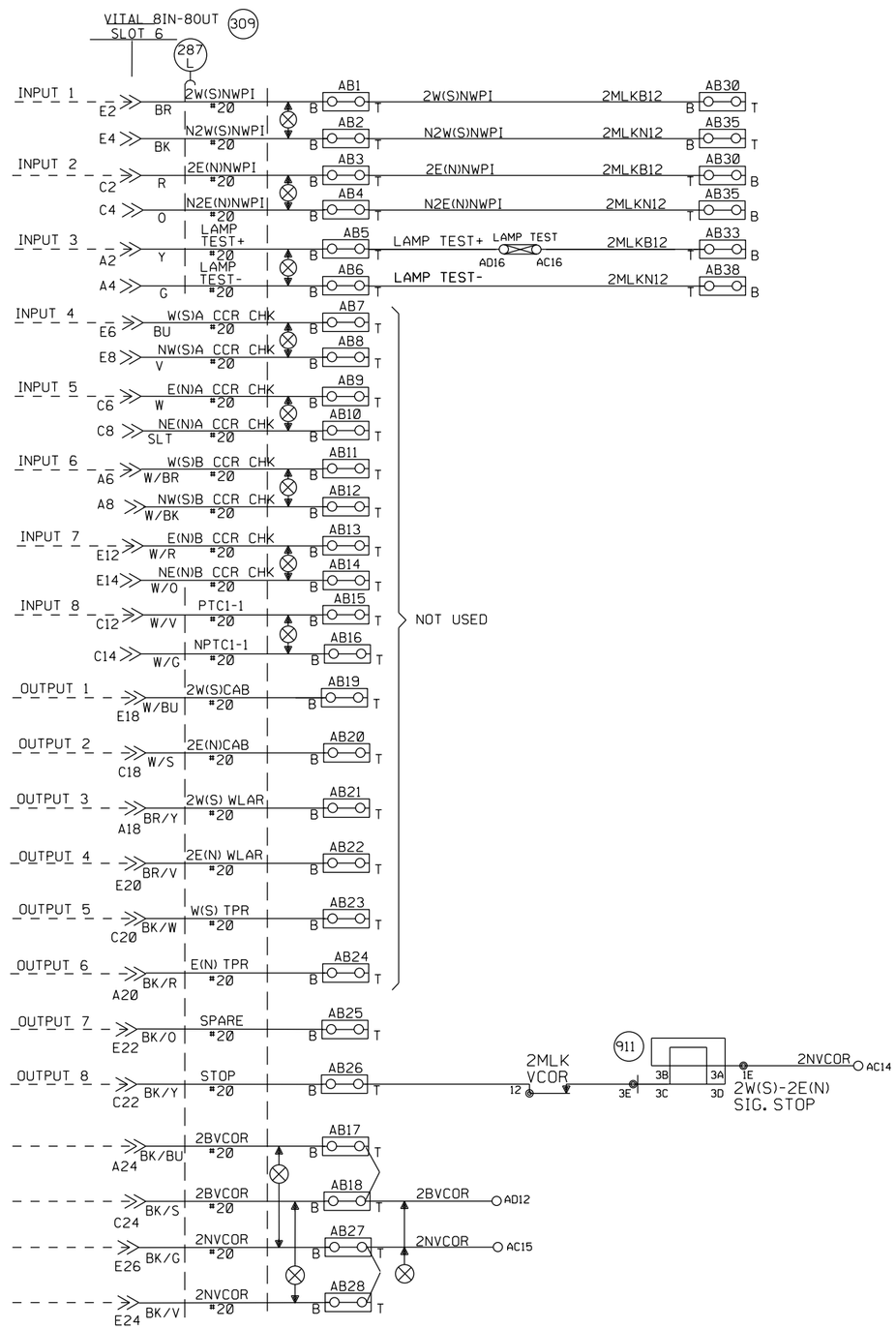


2W(S)-2E(N)T

NEW SHEET

| | | | | | | | | | | |
|---|---|---|---|---|---|---|---|---|---|---|
| | | | | | Designed: 09/27/12<br>TIER 1S PHASE 1<br>M.P. 239.70 TO M.P. 255.35 TO UPGRADE XING TO 4 QUAD WITH EGMS, VARIOUS C.P.'S<br>Rev'd: WO#: 10804<br>1S: NBT / NST/MJF | MODIFICATION LEVEL<br>D. A. LAST LEVEL CHECKED — DU<br>LAST LEVEL MOD THIS TYPICAL — DU<br>LAST LEVEL BY DESIGNER — DU<br>CHANGED FROM TYPICAL? — Y<br>REV 8/20/10 1TMLHBINTU.3A | CIRCUIT MODIFICATIONS ARE NOT TO BE MADE WITHOUT AUTHORITY FROM THE OFFICE OF SIGNAL DESIGN | Date: 09/27/12<br>Des: NST<br>Chk: NBT<br>AFE: 10804 | UNION PACIFIC RAILROAD<br>TWO TRACK INTERMEDIATE<br>SPRINGFIELD SUBDIVISION<br>Office of AVP Engineering - Signal Omaha, Nebraska | Sh.: 7A<br>MP: 239.60<br>ID: CSL23960.7AS |

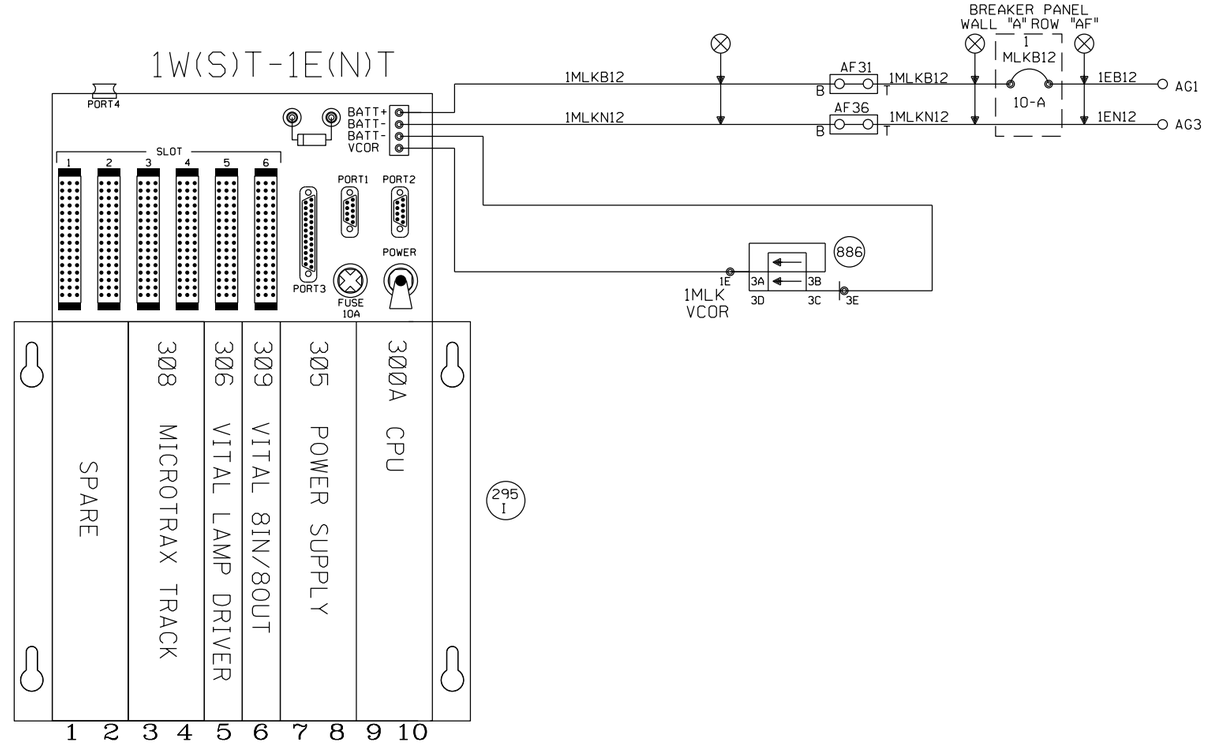


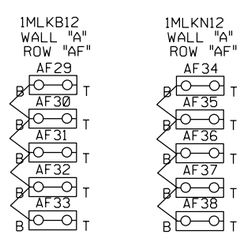


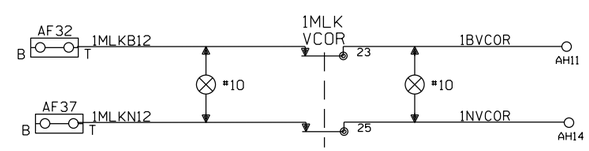


NEW SHEET

| | | | | | | | | | | | |
|---|---|---|---|---|---|---|---|---|---|---|---|
| | | | | | Designed: 09/27/12<br>TIER IS PHASE I<br>M.P. 239.70 TO M.P. 255.35 TO UPGRADE XING TO 4 QUAD WITH EGMS, VARIOUS C.P.'S<br>Rec*: WO#: 10804<br>IS: NBT / / NST/MJF | MODIFICATION LEVEL | | CIRCUIT MODIFICATIONS ARE NOT TO BE MADE WITHOUT AUTHORITY FROM THE OFFICE OF SIGNAL DESIGN | Date: 09/27/12<br>Des: NST<br>Chk: NBT<br>AFE: 10804 | UNION PACIFIC RAILROAD<br>TWO TRACK INTERMEDIATE<br>SPRINGFIELD SUBDIVISION<br>Office of AVP Engineering - Signal Omaha, Nebraska | Sh.: 8<br>MP: 239.60<br>ID: CSL23960.8S |
| | | | | | | Q.A. LAST LEVEL CHECKED | DU | | | | |
| | | | | | | LAST LEVEL MOD THIS TYPICAL | DU | | | | |
| | | | | | | LAST LEVEL BY DESIGNER | DU | | | | |
| | | | | | | CHANGED FROM TYPICAL? | Y | | | | |
| | | | | | | REV 8/20/10 1TMLHBINTU.4 | | | | | |

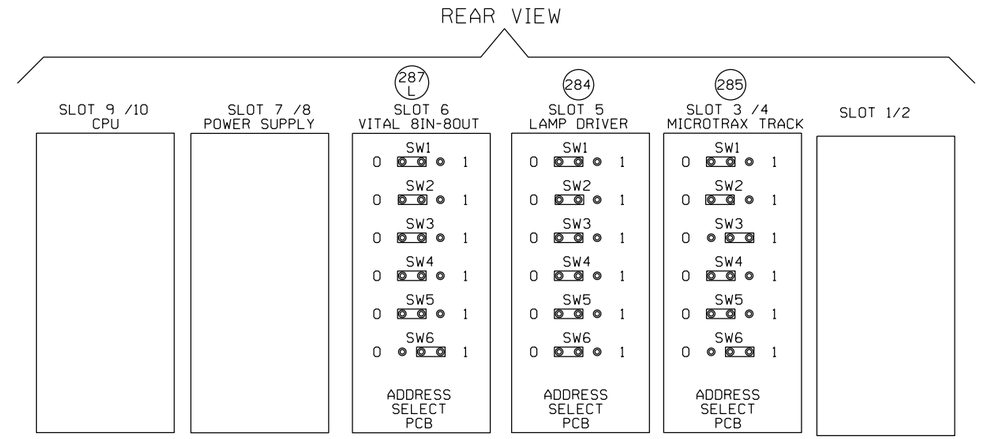


NOTE: FOR PTC COMPATIBLE CPU JUMPER SETTINGS REFER TO ANSALDO MANUAL 1D1.0028 PAGE 1-26 1-27 1-28 REV.1 DATE 8/2009

IF BOX CHECKED SET APPROPRIATE PROG. ID

ML8UP5060 REV.N

| | | |
|---|---|---|
| 15 SEC SLOW PICK ET TO PREVENT JOINT HOP | | USE WHEN INTERFACING MICRO-ECODE TO GETS ECODE |
| 15 SEC SLOW PICK WT TO PREVENT JOINT HOP | | USE WHEN INTERFACING MICRO-ECODE TO GETS ECODE |
| APPROACH TO #30 WEST? | | (SET PROG ID 1) |
| APPROACH TO #30 EAST? | | (SET PROG ID 2) |
| Y/G W/B SEND Y/FG EAST? | | (SET PROG ID 3) |
| Y/G E/B SEND Y/FG WEST? | | (SET PROG ID 5) |
| Y/G W/B SEND GREEN EAST? | X | (SET PROG ID 4) |
| Y/G E/B SEND GREEN WEST? | X | (SET PROG ID 6) |
| Y/FG W/B SEND GREEN EAST | | (SET PROG ID 8) |
| Y/FG E/B SEND GREEN WEST | | (SET PROG ID 9) |
| PROGRAM ID 1 (BINARY 1) | | |
| PROGRAM ID 2 (BINARY 2) | | |
| PROGRAM ID 3 (BINARY 4) | | |
| PROGRAM ID 4 (BINARY 8) | X | |
| PROGRAM ID 5 (BINARY 16) | | |
| PROGRAM ID 6 (BINARY 32) | X | |
| PROGRAM ID 7 (BINARY 64) | | (SET TO DISABLE VIO8 CAB) |
| PROGRAM ID 8 (BINARY 128) | | |
| PROGRAM ID 9 (BINARY 256) | | |
| PROGRAM ID 10 (BINARY 512) | | (MUST BE CLEAR) |
| PROGRAM ID 11 (BINARY 1024) | X | (MUST BE SET) |
| PROGRAM ID 12 (BINARY 2048) | | (SET TO DISABLE INCAND. SIG BOARD) |
| PROGRAM ID 13 (BINARY 4096) | X | (SET TO DISABLE LED SIG BOARD) |
| PROGRAM ID 14 (BINARY 8192) | | |
| PROGRAM ID 15 (BINARY 16384) | | |
| PROGRAM ID 16 (BINARY 32768) | | |
| PROGRAM ID 17 (BINARY 65536) | X | |
| PROGRAM ID 18 (BINARY 131072) | | |
| PROGRAM ID 19 (BINARY 262144) | | |
| PROGRAM ID 20 (BINARY 524288) | | |
| PROGRAM ID 21 (BINARY 1048576) | X | |
| WEST TK UP SEND C5 EAST | X | |
| REC C5 W TK SEND C5 EAST | | |
| EAST TK UP SEND C5 WEST | X | |
| REC C5 E TK SEND C5 WEST | | |
| W(S) "B" HEAD FLASHING RED | | (SET PROG ID 14) |
| W(S) "B" HEAD LUNAR | | (SET PROG ID 15) |
| W(S) "B" HEAD YELLOW | | (SET PROG ID 16) |
| W(S) "B" HEAD GREEN | X | (SET PROG ID 17) |
| E(N) "B" HEAD FLASHING RED | | (SET PROG ID 18) |
| E(N) "B" HEAD LUNAR | | (SET PROG ID 19) |
| E(N) "B" HEAD YELLOW | | (SET PROG ID 20) |
| E(N) "B" HEAD GREEN | X | (SET PROG ID 21) |
| E(N) C5 APPLIT | X | (ENABLE APPLIT W(S) SIG W/LOSS OF C5) |
| W(S) C5 APPLIT | X | (ENABLE APPLIT E(N) SIG W/LOSS OF C5) |

PLACE AN "X" IN THE BOX TO REPRESENT A SET STATE.

1W(S)-1E(N)T

**NEW SHEET**

Designed: 09/27/12
TIER 1S PHASE 1 M.P.239.70 TO M.P. 255.35 TO UPGRADE XING TO 4 QUAD WITH EGMS, VARIOUS C.P.'S
Rec'd: WO#: 10804
1S: NBT / /NST/MJF

| MODIFICATION LEVEL | |
|---|---|
| O. A. LAST LEVEL CHECKED | DU |
| LAST LEVEL MOD THIS TYPICAL | DU |
| LAST LEVEL BY DESIGNER | DU |
| CHANGED FROM TYPICAL? | Y |

REV 8/20/10 1TMLHBINTU.5

CIRCUIT MODIFICATIONS ARE NOT TO BE MADE WITHOUT AUTHORITY FROM THE OFFICE OF SIGNAL DESIGN

Date: 09/27/12
Des: NST
Chk: NBT
AFE: 10804

**UNION PACIFIC RAILROAD**

TWO TRACK INTERMEDIATE
SPRINGFIELD SUBDIVISION

Office of AVP Engineering - Signal Omaha, Nebraska

Sh.: 9
MP: 239.60
ID: CSL23960.9S

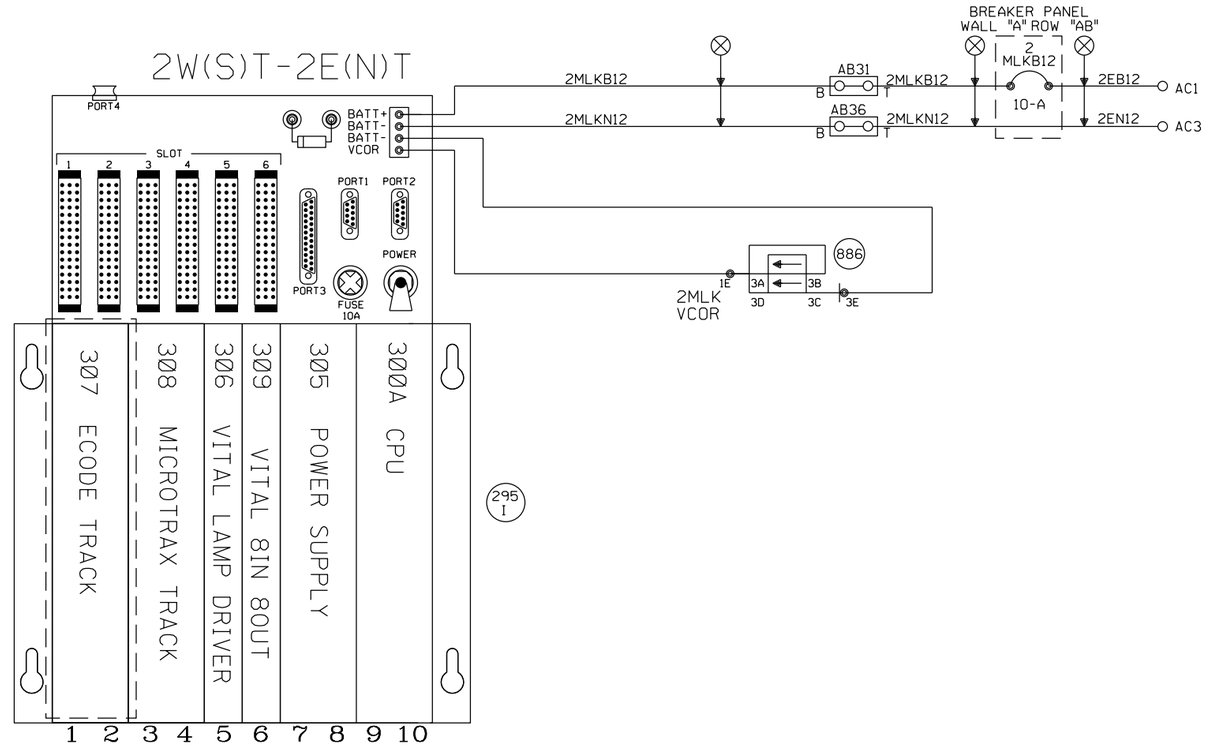


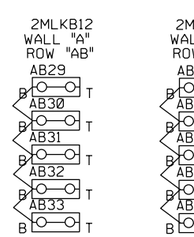


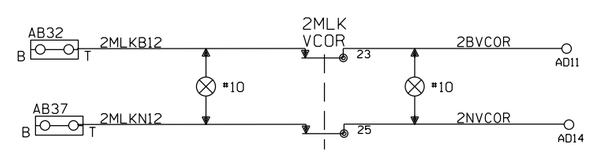


— — = ECODE TRACK 307 CARD TO BE REMOVED IN PHASE 2

NEW SHEET

| | | | | | | | | | | |
|---|---|---|---|---|---|---|---|---|---|---|
| | | | | | Designed: 09/27/12<br>TIER IS PHASE 1 M.P. 239.70 TO M.P. 255.35 TO UPGRADE XING TO 4 QUAD WITH EGMS, VARIOUS C.P.'S<br>Rec'd: WO#: 10804<br>IS: NBT / / NST/MJF | MODIFICATION LEVEL | | CIRCUIT MODIFICATIONS ARE NOT TO BE MADE WITHOUT AUTHORITY FROM THE OFFICE OF SIGNAL DESIGN | Date: 09/27/12 | UNION PACIFIC RAILROAD | Sh.: 10 |
| | | | | | | Q.A. LAST LEVEL CHECKED | DU | | Des: NST | | |
| | | | | | | LAST LEVEL MOD THIS TYPICAL | DU | | Chk: NBT | TWO TRACK INTERMEDIATE SPRINGFIELD SUBDIVISION | MP: 239.60 |
| | | | | | | LAST LEVEL BY DESIGNER | DU | | | | |
| | | | | | | CHANGED FROM TYPICAL? | Y | | AFE: 10804 | Office of AVP Engineering - Signal Omaha, Nebraska | ID: CSL23960.10S |
| | | | | | | REV 8/20/10 1TMLHBINTU.4 | | | | | |

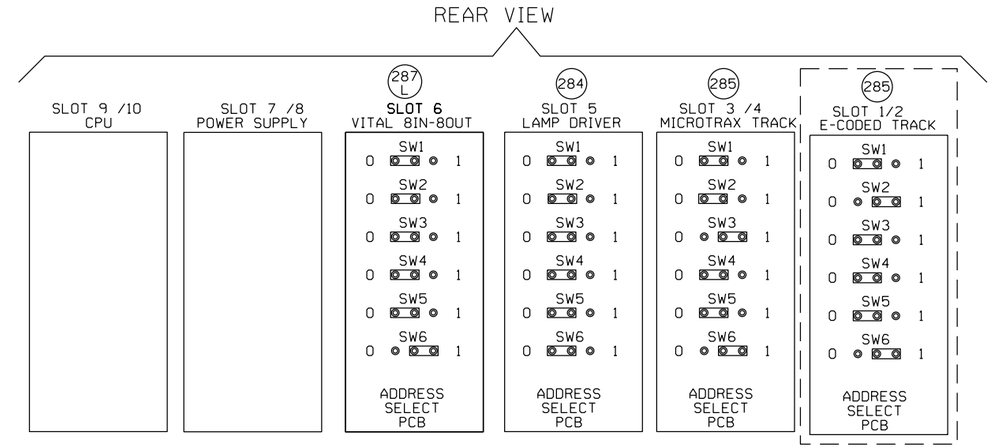


NOTE: FOR PTC COMPATIBLE CPU JUMPER SETTINGS REFER TO ANSALDO MANUAL 1D1.0028 PAGE 1-26 1-27 1-28 REV.1 DATE 8/2009

IF BOX CHECKED SET APPROPRIATE PROG. ID

| ML8UP5060 REV.N | | |
|---|---|---|
| 15 SEC SLOW PICK ET TO PREVENT JOINT HOP | X | USE WHEN INTERFACING MICRO-ECODE TO GETS ECODE |
| 15 SEC SLOW PICK WT TO PREVENT JOINT HOP | | USE WHEN INTERFACING MICRO-ECODE TO GETS ECODE |
| APPROACH TO #30 WEST? | | (SET PROG ID 1) |
| APPROACH TO #30 EAST? | | (SET PROG ID 2) |
| Y/G W/B SEND Y/FG EAST? | | (SET PROG ID 3) |
| Y/G E/B SEND Y/FG WEST? | | (SET PROG ID 5) |
| Y/G W/B SEND GREEN EAST? | X | (SET PROG ID 4) |
| Y/G E/B SEND GREEN WEST? | | (SET PROG ID 6) |
| Y/FG W/B SEND GREEN EAST | | (SET PROG ID 8) |
| Y/FG E/B SEND GREEN WEST | | (SET PROG ID 9) |
| PROGRAM ID 1 (BINARY 1) | | |
| PROGRAM ID 2 (BINARY 2) | | |
| PROGRAM ID 3 (BINARY 4) | | |
| PROGRAM ID 4 (BINARY 8) | X | |
| PROGRAM ID 5 (BINARY 16) | | |
| PROGRAM ID 6 (BINARY 32) | | |
| PROGRAM ID 7 (BINARY 64) | | (SET TO DISABLE VIO8 CAB) |
| PROGRAM ID 8 (BINARY 128) | | |
| PROGRAM ID 9 (BINARY 256) | | |
| PROGRAM ID 10 (BINARY 512) | | (MUST BE CLEAR) |
| PROGRAM ID 11 (BINARY 1024) | X | (MUST BE SET) |
| PROGRAM ID 12 (BINARY 2048) | | (SET TO DISABLE INCAND. SIG BOARD) |
| PROGRAM ID 13 (BINARY 4096) | X | (SET TO DISABLE LED SIG BOARD) |
| PROGRAM ID 14 (BINARY 8192) | | |
| PROGRAM ID 15 (BINARY 16384) | | |
| PROGRAM ID 16 (BINARY 32768) | | |
| PROGRAM ID 17 (BINARY 65536) | X | |
| PROGRAM ID 18 (BINARY 131072) | | |
| PROGRAM ID 19 (BINARY 262144) | | |
| PROGRAM ID 20 (BINARY 524288) | X | |
| PROGRAM ID 21 (BINARY 1048576) | | |
| WEST TK UP SEND C5 EAST | X | |
| REC C5 W TK SEND C5 EAST | | |
| EAST TK UP SEND C5 WEST | X | |
| REC C5 E TK SEND C5 WEST | | |
| W(S) "B" HEAD FLASHING RED | | (SET PROG ID 14) |
| W(S) "B" HEAD LUNAR | | (SET PROG ID 15) |
| W(S) "B" HEAD YELLOW | | (SET PROG ID 16) |
| W(S) "B" HEAD GREEN | X | (SET PROG ID 17) |
| E(N) "B" HEAD FLASHING RED | | (SET PROG ID 18) |
| E(N) "B" HEAD LUNAR | | (SET PROG ID 19) |
| E(N) "B" HEAD YELLOW | X | (SET PROG ID 20) |
| E(N) "B" HEAD GREEN | | (SET PROG ID 21) |
| E(N) C5 APPLIT | X | (ENABLE APPLIT W(S) SIG W/LOSS OF C5) |
| W(S) C5 APPLIT | X | (ENABLE APPLIT E(N) SIG W/LOSS OF C5) |

PLACE AN "X" IN THE BOX TO REPRESENT A SET STATE.

— — = ECODE TRACK 307 CARD TO BE REMOVED IN PHASE 2

2W(S)-2E(N)T

**NEW SHEET**

Designed: 09/27/12
TIER 1S PHASE 1 M.P. 239.70 TO M.P. 255.35 TO UPGRADE XING TO 4 QUAD WITH EGMS, VARIOUS C.P.'S
Req'd: WO#: 10804
1S: NBT / / /NST/MJF

| MODIFICATION LEVEL | |
|---|---|
| O. A. LAST LEVEL CHECKED | DU |
| LAST LEVEL MOD THIS TYPICAL | DU |
| LAST LEVEL BY DESIGNER | DU |
| CHANGED FROM TYPICAL? | Y |

REV 8/20/10 1TMLHBINTU.5

CIRCUIT MODIFICATIONS ARE NOT TO BE MADE WITHOUT AUTHORITY FROM THE OFFICE OF SIGNAL DESIGN

Date: 09/27/12
Des: NST
Chk: NBT
AFE: 10804

**UNION PACIFIC RAILROAD**

TWO TRACK INTERMEDIATE
SPRINGFIELD SUBDIVISION

Office of AVP Engineering - Signal Omaha, Nebraska

Sh.: 11
MP: 239.60
ID: CSL23960.11S

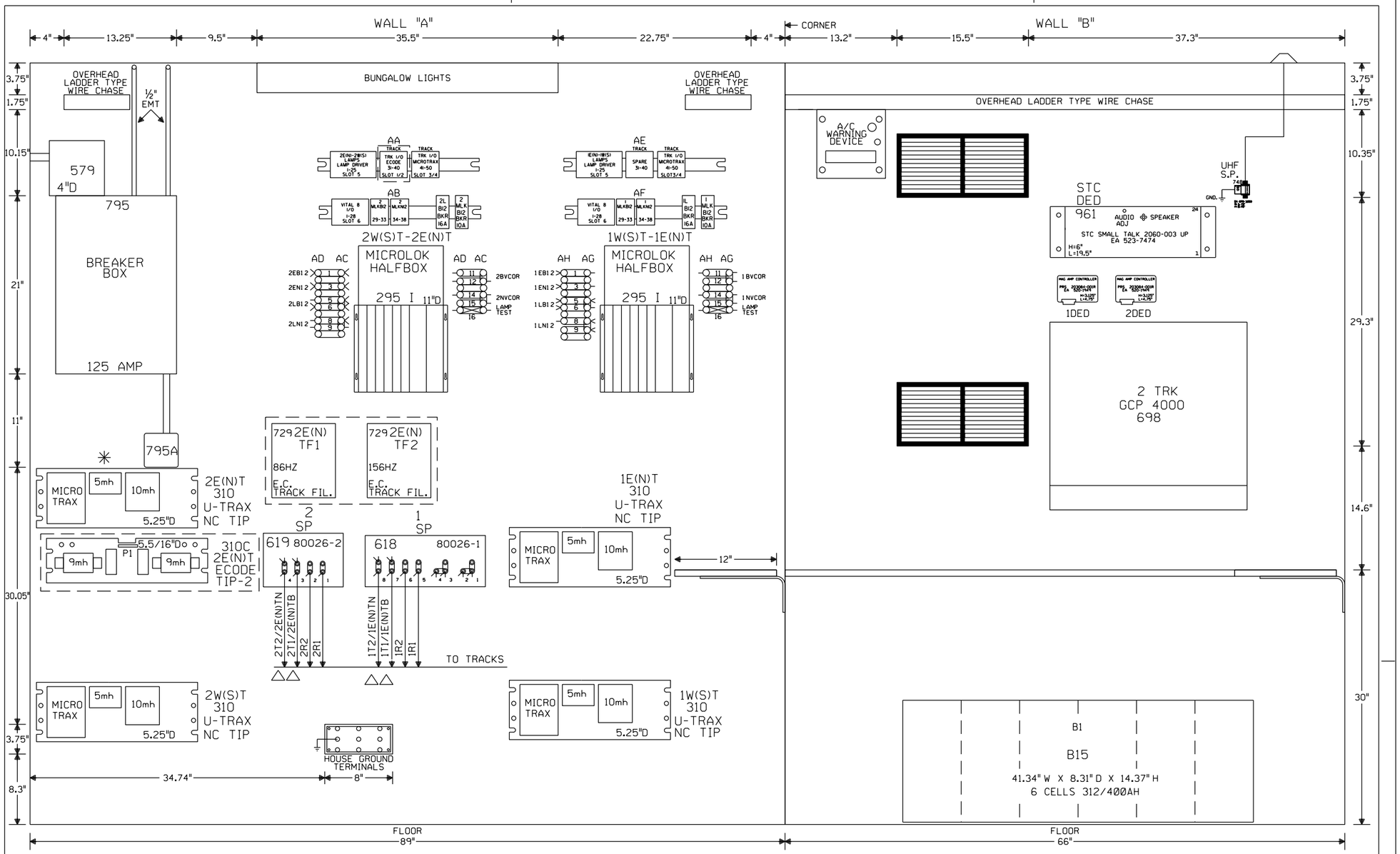


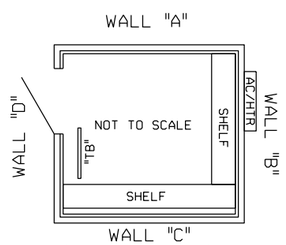


△ = FIELD VERIFY POLARITY

— — = EQUIPMENT TO BE REMOVED IN PHASE 2

✳ = REPLACE 310C 2E(N)T ECODE TIP-2 WITH 2E(N)T 310 U-TRAX NC TIP IN PHASE 2.

NOTE: MICROTRAX TIP PANELS MUST BE 12" APART AND 12" FROM CPU CARDS.

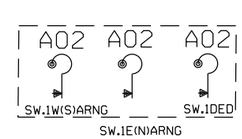


NOTE: PLEASE SHOW WHERE LOCATED ON OUTSIDE OF HOUSE.

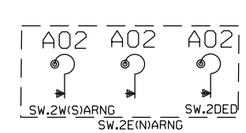


NOTE: ALL DIMENSIONS SHOWN ARE APPROXIMATE.

NEW SHEET

Designed: 09/27/12
TIER IS PHASE 1 M.P. 239.70 TO M.P. 255.35 TO UPGRADE XING TO 4 QUAD WITH EGMS, VARIOUS C.P.'S
Rec'd: WO#. 10804
IS: NBT / /NST/MJF

CIRCUIT MODIFICATIONS ARE NOT TO BE MADE WITHOUT AUTHORITY FROM THE OFFICE OF SIGNAL DESIGN

| | |
|---|---|
| Date: | 09/27/12 |
| Des: | NST |
| Chk: | NBT |
| AFE: | 10804 |

**UNION PACIFIC RAILROAD**

TWO TRACK INTERMEDIATE
SPRINGFIELD SUBDIVISION

Office of AVP Engineering - Signal — Omaha, Nebraska

| | |
|---|---|
| Sh.: | 12 |
| MP: | 239.60 |
| ID: | CSL23960.12S |

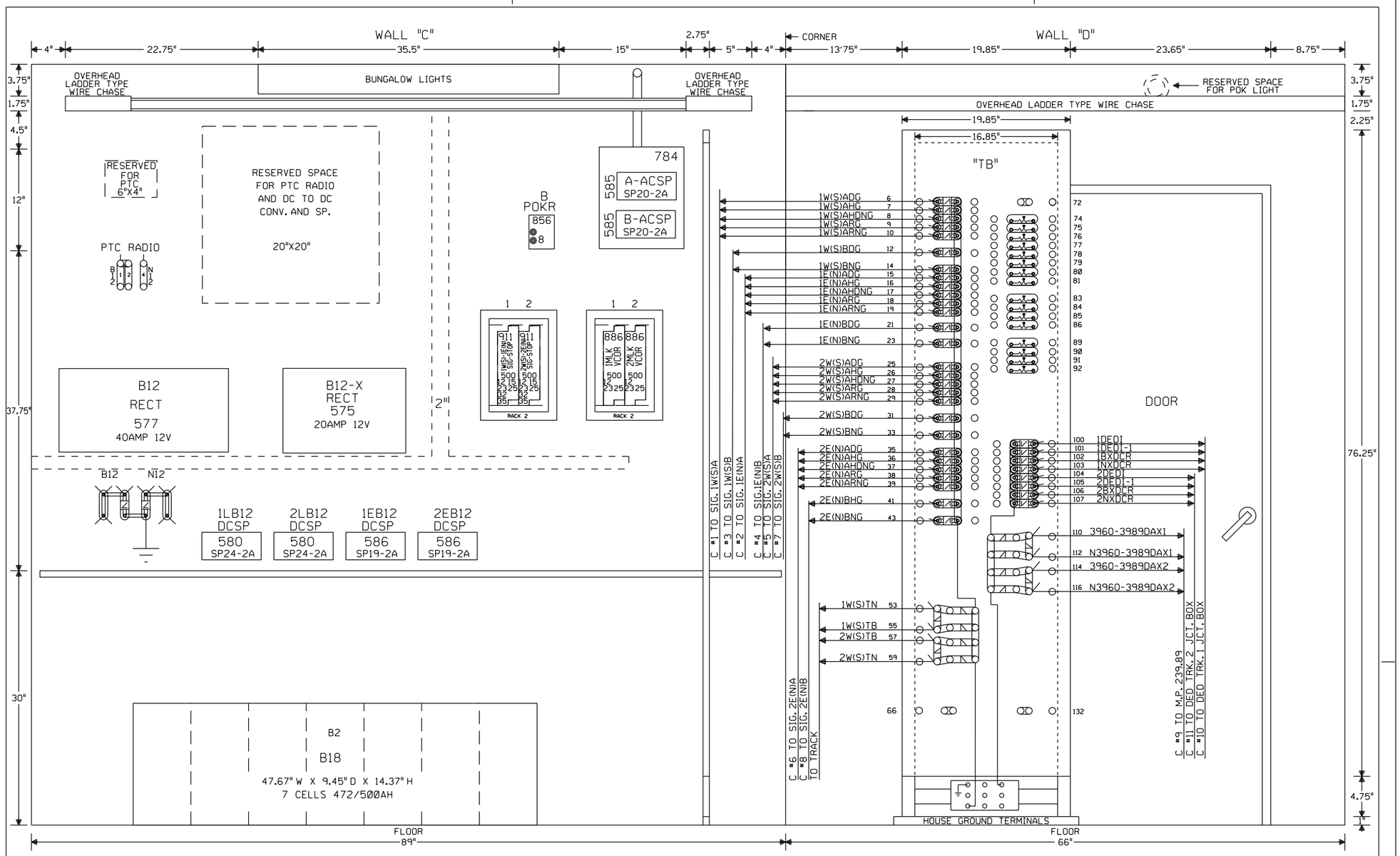


NEW SHEET

Designed: 09/27/12

TIER IS PHASE 1 M.P. 239.70 TO M.P. 255.35 TO UPGRADE XING TO 4 QUAD WITH EGMS, VARIOUS C.P.'S

Rec#: WO#: 10804
IS: NBT / / NST/MJF

CIRCUIT MODIFICATIONS ARE NOT TO BE MADE WITHOUT AUTHORITY FROM THE OFFICE OF SIGNAL DESIGN

Date: 09/27/12
Des: NST
Chk: NBT
AFE: 10804

**UNION PACIFIC RAILROAD**

TWO TRACK INTERMEDIATE
SPRINGFIELD SUBDIVISION

Office of AVP Engineering - Signal — Omaha, Nebraska

Sh.: 13
MP: 239.60
ID: CSL23960.13S

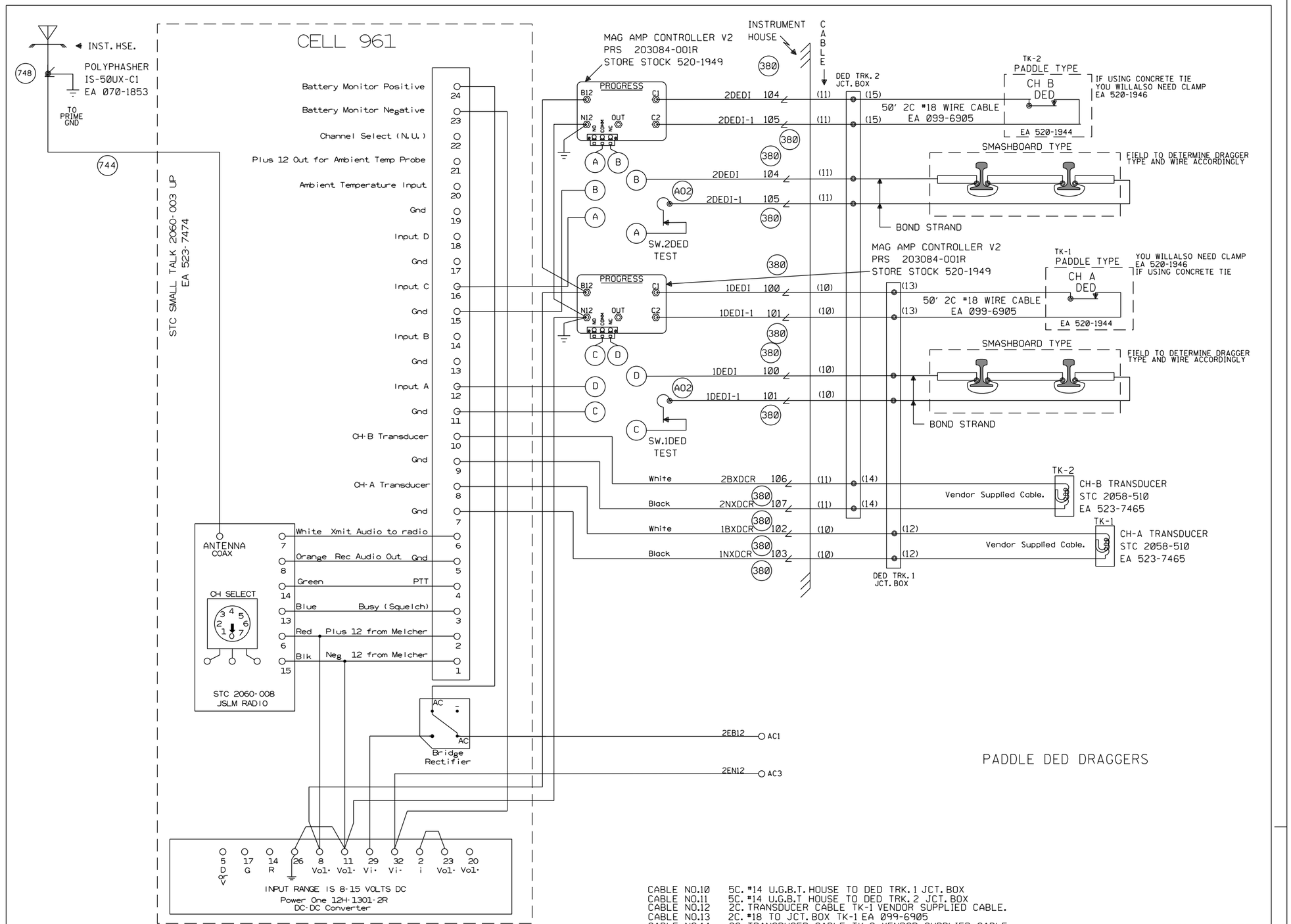


CABLE NO.10 5C. #14 U.G.B.T. HOUSE TO DED TRK. 1 JCT. BOX
CABLE NO.11 5C. #14 U.G.B.T HOUSE TO DED TRK. 2 JCT. BOX
CABLE NO.12 2C. TRANSDUCER CABLE TK-1 VENDOR SUPPLIED CABLE.
CABLE NO.13 2C. #18 TO JCT. BOX TK-1 EA 099-6905
CABLE NO.14 2C. TRANSDUCER CABLE TK-2 VENDOR SUPPLIED CABLE.
CABLE NO.15 2C. #18 TO JCT. BOX TK-2 EA 099-6905

**NEW SHEET**

Designed: 09/27/12
TIER IS PHASE 1 M.P. 239.70 TO M.P. 255.35 TO UPGRADE XING TO 4 QUAD WITH EGMS, VARIOUS C.P.'S
Rec*: WO#: 10804
IS: NBT / / /NST/MJF

| MODIFICATION LEVEL | |
|---|---|
| O.A. LAST LEVEL CHECKED | DU |
| LAST LEVEL MOD THIS TYPICAL | DU |
| LAST LEVEL BY DESIGNER | DU |
| CHANGED FROM TYPICAL? | Y |

REV 8/20/10 1TMLHBINTU.7

CIRCUIT MODIFICATIONS ARE NOT TO BE MADE WITHOUT AUTHORITY FROM THE OFFICE OF SIGNAL DESIGN

Date: 09/27/12
Des: NST
Chk: NBT
AFE: 10804

**UNION PACIFIC RAILROAD**

TWO TRACK INTERMEDIATE
SPRINGFIELD SUBDIVISION

Office of AVP Engineering - Signal Omaha, Nebraska

Sh.: 14
MP: 239.60
ID: CSL23960.14S