Completion of this form is necessary to accomplish the statutory purpose as outlined in the Illinois Public Utilities Act, chapter 111 2/3, Sec. 9. Failure to provide the requested information may prevent your request from being processed. This form has been approved by the Forms Management Center.

Form 3

STATE OF ILLINOIS
ILLINOIS COMMERCE COMMISSION

Petition for permission to make a major change in crossing protection, or to install new protection under 92 Illinois Administrative Code 1535.400 (d).

Date: **March 6, 2016**

To the Illinois Commerce Commission:

The petitioner **Norfolk Southern Railway Company** shows

(1) That it is a railroad company operating a line of railroad in the State of Illinois.

(2) That petitioner proposes and hereby makes application for authority to make a major change in crossing protection, or to install new protection, under 92 Illinois Administrative Code 1535.400 (d) adopted by this Commission.

(3) That the location of the crossing, the nature of protection now established and proposed to be established, and other pertinent facts in connection therewith, are set forth in the statement attached to and forming part of this petition.

(4) That petitioner's reasons and purpose, with reference to its said proposal are

Installation of Grade Crossing Warning Devices requested by Illinois Department of Transportation at: SR-3 & Adams St. in Brooklyn, Illinois, DOT: 724534T, MP: CV-5.15.

File No.: CX0111054 **Project No.: 04.0108**

(5) That the facts set forth in this petition and in the statement and plans or plats attached thereto, are, all of them, true and correct to the best of petitioner's knowledge and belief.

WHEREFORE, the petitioner prays that the Commission will, if deemed desirable by the Commission, set the aforesaid matter for hearing, and that the Commission enter an order or adopt a resolution consenting to and granting authority for the making of the said proposed changes in or additions to crossing protection.

Norfolk Southern Railway Company

By

S.J. Klinger, Administrator
Grade Crossing Program
(404) 529-1234

Thomas W. Ambler
(Attorney for Petitioner)

Norfolk Southern Corporation
Three Commercial Place
Norfolk, VA 23510-2191
(Attorney's Address)

Statement, attached to and part of an application for permission to make a major change in crossing protection or to install new protection, under 92 Illinois Administrative Code 1535.400(d).

1. Name of Railroad Company **Norfolk Southern Railway Company**

2. Crossing Number **724534T**

3. Village or City **Brooklyn**

4. Name of Street or Highway **SR-2 & Adams Street**

5. Public Agency Maintaining Highway **State**

6. Protection now established: (Give full description. Indicate the hours of any manual protection.)

   Flashing Light Signals and Bell.

7. Protection desired: (Give details)

   Install grade crossing warning devices to include LED flashing lights with gates and bell

   controlled by constant existing warning time detection equipment.

8. Number of main tracks **One** Other tracks **One**

9. Number of passenger movements:

   6 a.m. to 6 p.m. **None** 6 p.m. to 6 a.m. **None**

10. Number of freight train movements:

    6 a.m. to 6 p.m. **Two** 6 p.m. to 6 a.m. **Two**

11. Approximate number of switch movements:

    6 a.m. to 6 p.m. **None** 6 p.m. to 6 a.m. **None**

12. Maximum speed of trains at crossing on each track in each direction:

    Track 1 N/E Bound **15 mph** S/W Bound **15 mph**

    Track 2 N/E Bound **N/A mph** S/W Bound **N/A mph**

    Track 3 N/E Bound **N/A mph** S/W Bound **N/A mph**

13. Passenger platforms served by tracks within the limits of track circuits, if any **None**

14. Where automatic signals or gates are proposed, approximate number of train or engine movements daily which would cause false indications or operation:

None

15. Nature and approximate amount of street or highway traffic over crossing:

5150 AADT

16. In addition to the information listed hereinbefore in Form 3, attach a track plan or plat of the proposed crossing. This plan should show:

(a) Width and surface of highway.

(b) Highway intersections (including private driveways to be so indicated) and location of established highway signs or signals within 100 feet of crossing.

(c) Location of tracks, switches and other railroad facilities such as block signals, etc. within limits of track circuits, present and/or proposed.

(d) Where automatic protection is proposed, show proposed location of signals (sidelights, cantilevers, etc., if any).

(e) Show the length of each operation track section within the control limits of the crossing protection and its function.

ADDITIONAL INFORMATION

Drawings attached for question no. 16

VERIFICATION

I, **S. J. Klinger**, first being duly sworn upon oath depose and say that I am **Administrator, Grade Crossing Program**, of **Norfolk Southern Railway Company**, a **Virginia** corporation; that I have read the above and foregoing petition by me subscribed and know the contents thereof; that said contents are true in substance and in fact, except as to those matters stated upon information and belief, and as to those, I believe same to be true.

Administrator, Grade Crossing Program

SH. NO.	CONTENTS
NX1	INDEX SHEET
1	LAYOUT
2	PROFILE
3	CABLE PLAN
4	LOAD CENTER
5	B12 CHARGER & BATTERY
6	B16 & B16A CHARGERS & BATTERIES
7	4000 GCP 2-TK CHASSIS & MODULE LAYOUT
8	4000 GCP PROGRAMMING SETUP
9	4000 GCP PROGRAMMING SETUP
10	CONNECTORS FOR TRACK MODULES
11	CPU MODULE, SEAR IIi & VHF HOOK-UPS
12	SEAR IIi PROGRAMMING SETUP
13	SSCC#1 MODULE HOOK-UP
14	SSCC#2 MODULE HOOK-UP
15	DATA RADIO
16	SIGNAL "A" S60 GATE & FLASHER CIRCUITS
17	SIGNAL "B" S60 GATE & FLASHER CIRCUITS
18	SIGNAL "C" S60 GATE & FLASHER CIRCUITS
19	BACKBOARD 1A & 1B
20	REAR BACKBOARD 1A & 1B
21	BACKBOARD 1C
22	REAR BACKBOARD 1C
23	FARADAY SHIELD 1A & 1B
24	FARADAY SHIELD 1C
25	HOUSE SIDE C LAYOUT & RACK PLACEMENT
26	HOUSE SIDE A LAYOUT
27	HOUSE SIDE B LAYOUT & TOP VIEW

IN SERVICE_____ _____
SIGNED DATE

☐ S&E ENGINEERING COPY
☐ CONSTRUCTION OFFICE COPY
RETURN TO S&E ENG. AFTER COMPLETION
☐ FIELD COPY
RETURN TO CASE AFTER COMPLETION
☐ PROJECT ENGINEER COPY

PROJECT #04.0108 INDEX SHEET FILE No. CX

DESIGNED BY: WJK 10-23-15	NORFOLK SOUTHERN		
DRAWN BY: XRL 10-23-15	OFFICE OF ASS'T. VICE PRESIDENT COMM. & SIGNAL, ATLANTA, GA.	M.P.:	VC-5.11
CHECKED BY: PEH 10-29-15	BROOKLYN, IL FLGS AT SR-3 & ADAMS ST		
IN SERVICE: - -	VC BELT DISTRICT	FILE No.	R-
	CADD or DWG. No. XW0784P.NX1	SHEET No.	1 of 1

REVISION INITIALS

PROPERTY
NORFOLK SOUTHERN RAILWAY CO.

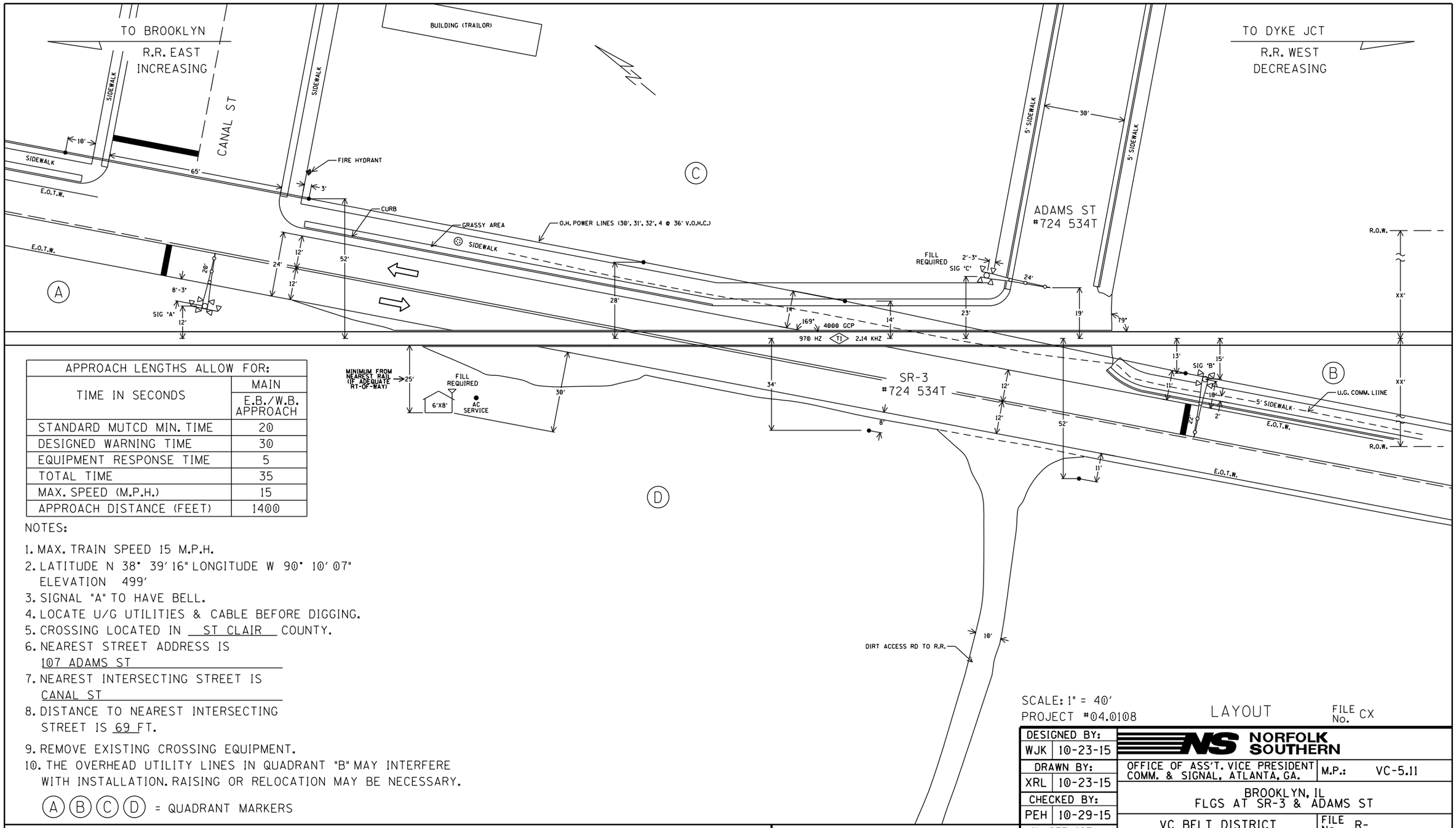

APPROACH LENGTHS ALLOW FOR:	
TIME IN SECONDS	MAIN E.B./W.B. APPROACH
STANDARD MUTCD MIN. TIME	20
DESIGNED WARNING TIME	30
EQUIPMENT RESPONSE TIME	5
TOTAL TIME	35
MAX. SPEED (M.P.H.)	15
APPROACH DISTANCE (FEET)	1400

NOTES:

1. MAX. TRAIN SPEED 15 M.P.H.
2. LATITUDE N 38° 39' 16" LONGITUDE W 90° 10' 07"
   ELEVATION 499'
3. SIGNAL "A" TO HAVE BELL.
4. LOCATE U/G UTILITIES & CABLE BEFORE DIGGING.
5. CROSSING LOCATED IN ST CLAIR COUNTY.
6. NEAREST STREET ADDRESS IS
   107 ADAMS ST
7. NEAREST INTERSECTING STREET IS
   CANAL ST
8. DISTANCE TO NEAREST INTERSECTING
   STREET IS 69 FT.
9. REMOVE EXISTING CROSSING EQUIPMENT.
10. THE OVERHEAD UTILITY LINES IN QUADRANT "B" MAY INTERFERE WITH INSTALLATION. RAISING OR RELOCATION MAY BE NECESSARY.

(A) (B) (C) (D) = QUADRANT MARKERS

SCALE: 1" = 40'
PROJECT #04.0108

LAYOUT

FILE No. CX

DESIGNED BY: WJK 10-23-15	NORFOLK SOUTHERN
DRAWN BY: XRL 10-23-15	OFFICE OF ASS'T. VICE PRESIDENT COMM. & SIGNAL, ATLANTA, GA. — M.P.: VC-5.11
CHECKED BY: PEH 10-29-15	BROOKLYN, IL FLGS AT SR-3 & ADAMS ST
IN SERVICE: - -	VC BELT DISTRICT — FILE No. R-
	CADD or DWG. No. XW0784P.01 — SHEET No. 1 of 27

REVISION INITIALS										

PROPERTY
NORFOLK SOUTHERN RAILWAY CO.

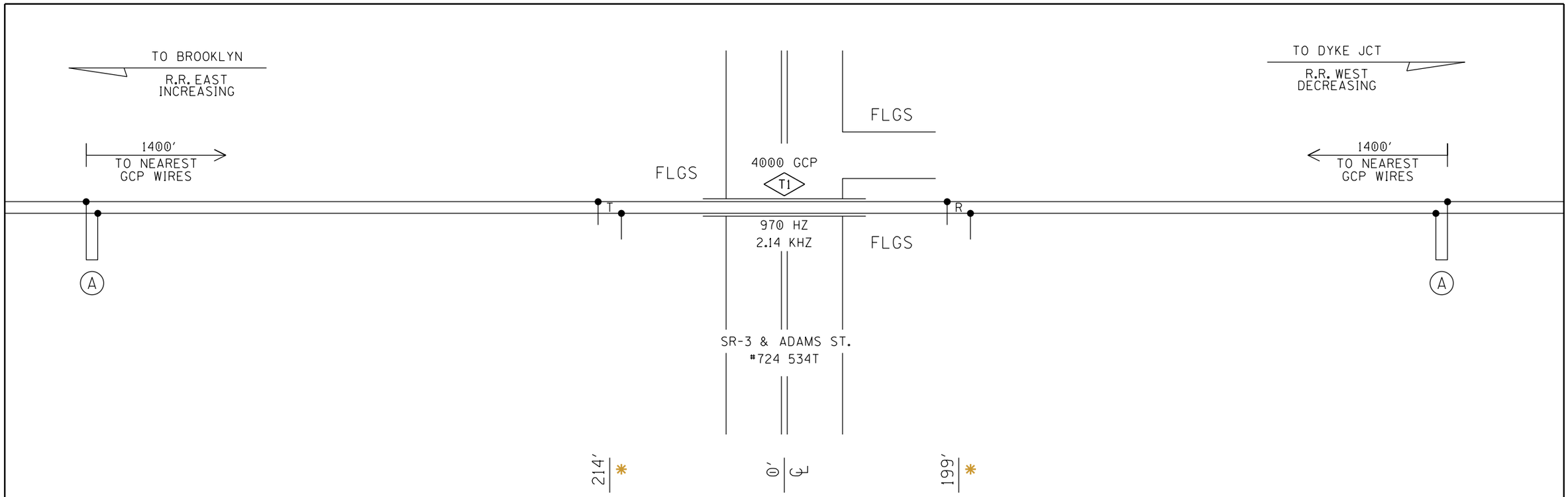

(A)– HARD WIRE SHUNT

PROFILE

* = FIELD VERIFY EXISTING ISLAND DISTANCE.

DESIGNED BY: WJK 10-23-15	NORFOLK SOUTHERN		
DRAWN BY: XRL 10-23-15	OFFICE OF ASS'T. VICE PRESIDENT COMM. & SIGNAL, ATLANTA, GA.	M.P.:	VC-5.11
CHECKED BY: PEH 10-29-15	BROOKLYN, IL FLGS AT SR-3 & ADAMS ST		
IN SERVICE: - -	VC BELT DISTRICT	FILE No.	R-
	CADD or DWG. No. XW0784P.02	SHEET No.	2 of 27

REVISION INITIALS											

PROPERTY
NORFOLK SOUTHERN RAILWAY CO.

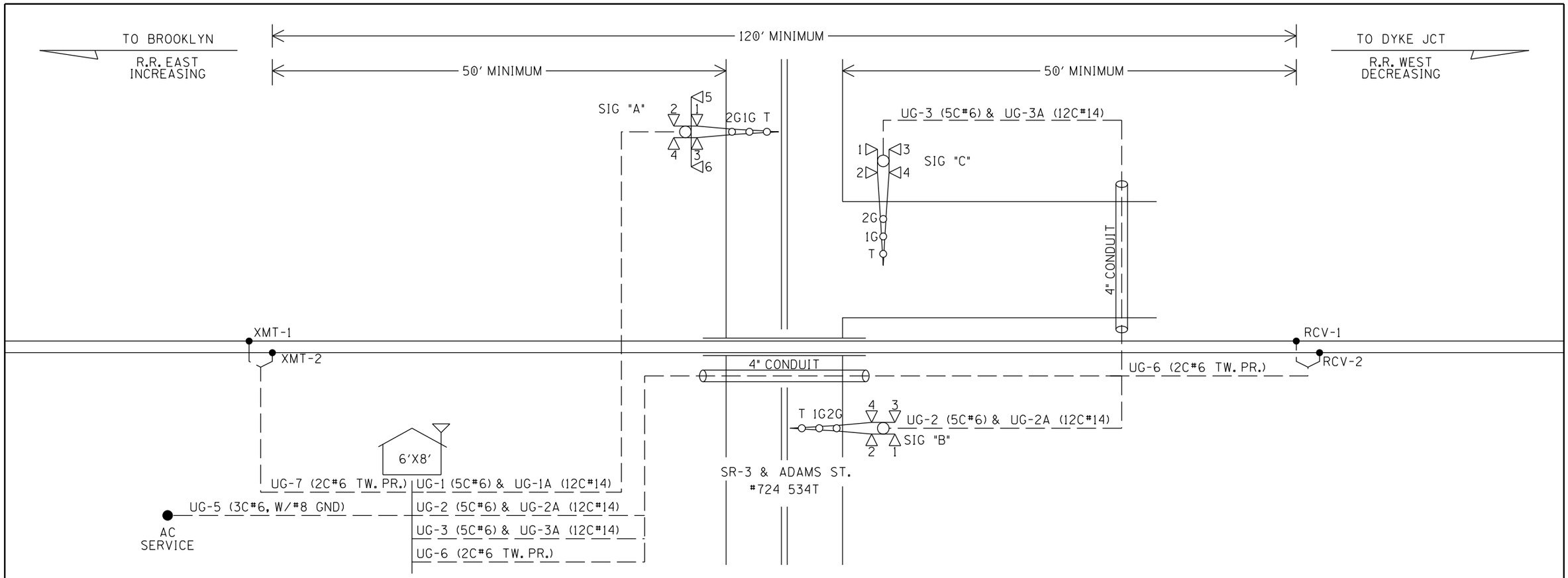

UG-1-5CUG #6	UG-3-5CUG #6	UG-1A-12CUG #14	UG-2A-12CUG #14	UG-3A-12CUG #14	UG-5-3CUG #6 W/#8 GND	UG-6-TW. PR. #6
AEC	CEC	NAXG	NBXG	NCXG	BX120-A	RCV-1
AEZ	CEZ	AXG	BXG	CXG	BX120-B	RCV-2
AEB	CEB	1AXX	1BXX	1CXX	NX120	
N16-A	N16A-C	AXX	BXX	CXX	GND	
B16-A	B16A-C	XGP2	XGP2	XGP1		
		AGD	XGP1	XGP		
		AGBX120	BGD	CGD		
		AGNX120	BGBX120	CGBX120		
		SPARE	BGNX120	CGNX120		
		SPARE	SPARE	SPARE		
		SPARE	SPARE	SPARE		
		SPARE	SPARE	SPARE		

UG-2-5CUG #6
BEC
BEZ
BEB
N16-B
B16-B

UG-7-TW. PR. #6
XMT-1
XMT-2

CABLE PLAN

DESIGNED BY: WJK 10-23-15	NORFOLK SOUTHERN		
DRAWN BY: XRL 10-23-15	OFFICE OF ASS'T. VICE PRESIDENT COMM. & SIGNAL, ATLANTA, GA.	M.P.:	VC-5.11
CHECKED BY: PEH 10-29-15	BROOKLYN, IL FLGS AT SR-3 & ADAMS ST		
IN SERVICE: - -	VC BELT DISTRICT	FILE No.	R-
	CADD or DWG. No. XW0784P.03	SHEET No.	3 of 27

REVISION INITIALS										

PROPERTY
NORFOLK SOUTHERN RAILWAY CO.

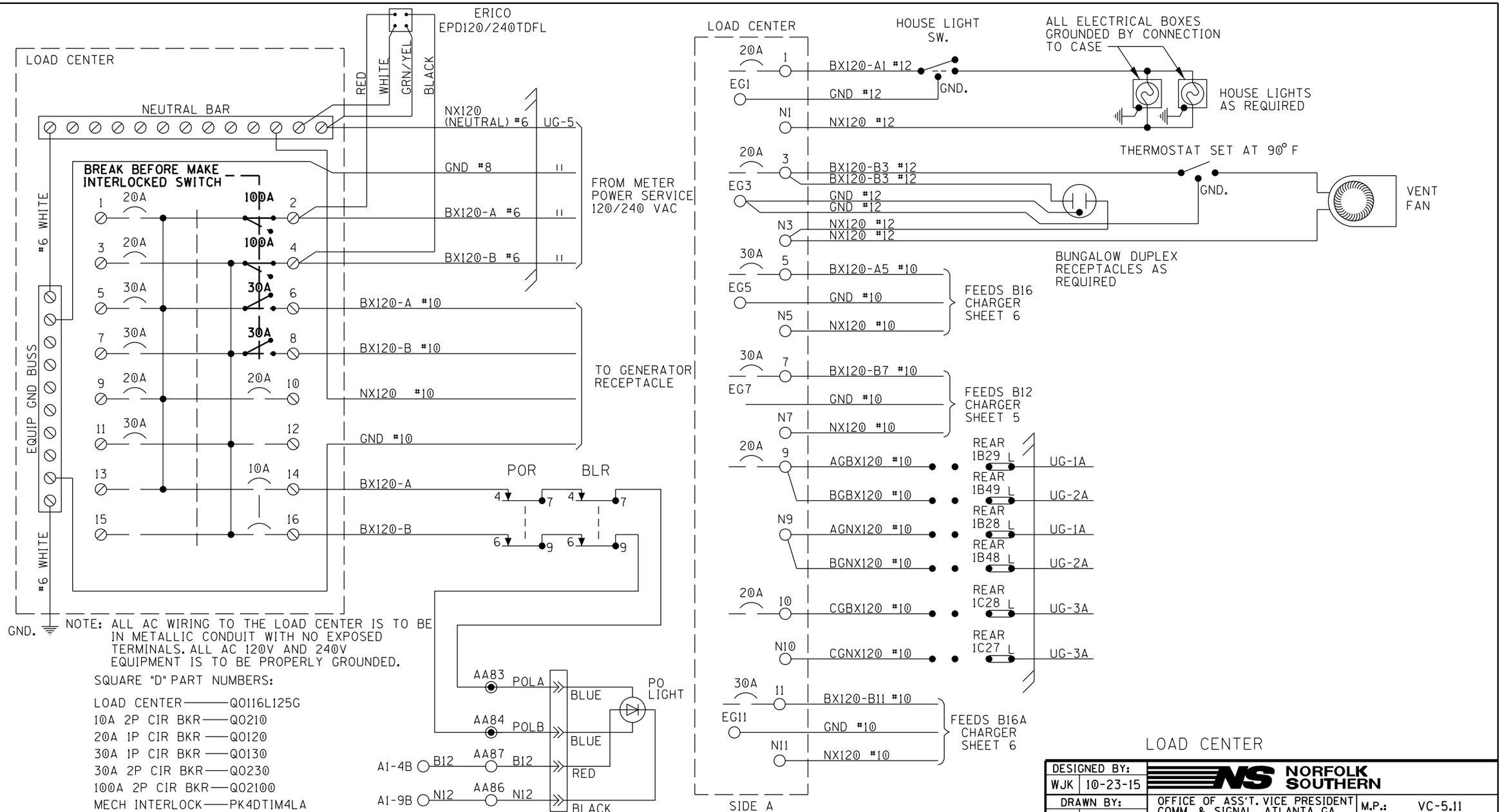

NOTE: ALL AC WIRING TO THE LOAD CENTER IS TO BE IN METALLIC CONDUIT WITH NO EXPOSED TERMINALS. ALL AC 120V AND 240V EQUIPMENT IS TO BE PROPERLY GROUNDED.

SQUARE "D" PART NUMBERS:

LOAD CENTER — Q0116L125G
10A 2P CIR BKR — Q0210
20A 1P CIR BKR — Q0120
30A 1P CIR BKR — Q0130
30A 2P CIR BKR — Q0230
100A 2P CIR BKR — Q02100
MECH INTERLOCK — PK4DTIM4LA

GENERATOR RECEPTACLE:
MALE CONNECTOR - NEMA L1430-FI

LOAD CENTER

DESIGNED BY: WJK 10-23-15	NORFOLK SOUTHERN		
DRAWN BY: XRL 10-23-15	OFFICE OF ASS'T. VICE PRESIDENT COMM. & SIGNAL, ATLANTA, GA.	M.P.:	VC-5.11
CHECKED BY: PEH 10-29-15	BROOKLYN, IL FLGS AT SR-3 & ADAMS ST		
IN SERVICE: - -	VC BELT DISTRICT	FILE No.	R-
	CADD or DWG. No. XW0784P.04	SHEET No.	4 of 27

REVISION INITIALS

PROPERTY
NORFOLK SOUTHERN RAILWAY CO.

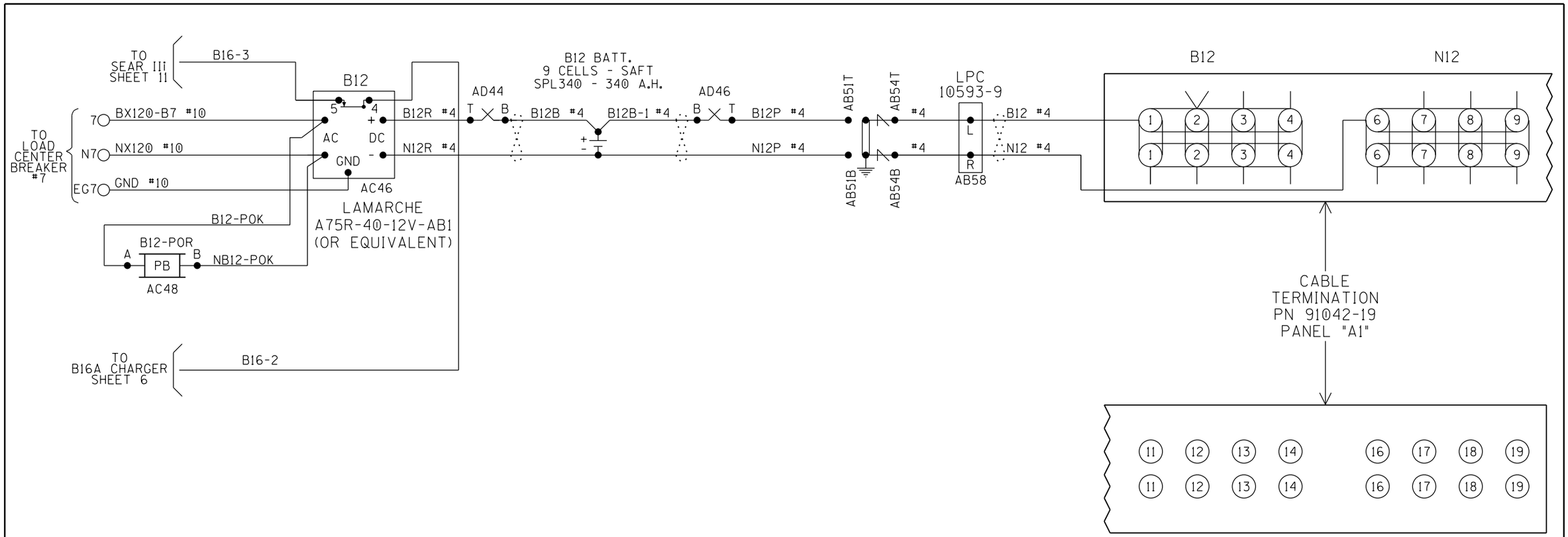

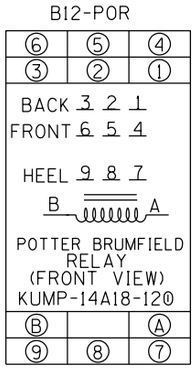

NOTES:

ALL WIRING TO BE #16AWG UNLESS NOTED OTHERWISE.

= TWIST

B12 CHARGER & BATTERY

DESIGNED BY: WJK 10-23-15	NORFOLK SOUTHERN	
DRAWN BY: XRL 10-23-15	OFFICE OF ASS'T. VICE PRESIDENT COMM. & SIGNAL, ATLANTA, GA.	M.P.: VC-5.11
CHECKED BY: PEH 10-29-15	BROOKLYN, IL FLGS AT SR-3 & ADAMS ST	
IN SERVICE: - -	VC BELT DISTRICT	FILE No. R-
	CADD or DWG. No. XW0784P.05	SHEET No. 5 of 27

REVISION INITIALS

PROPERTY
NORFOLK SOUTHERN RAILWAY CO.

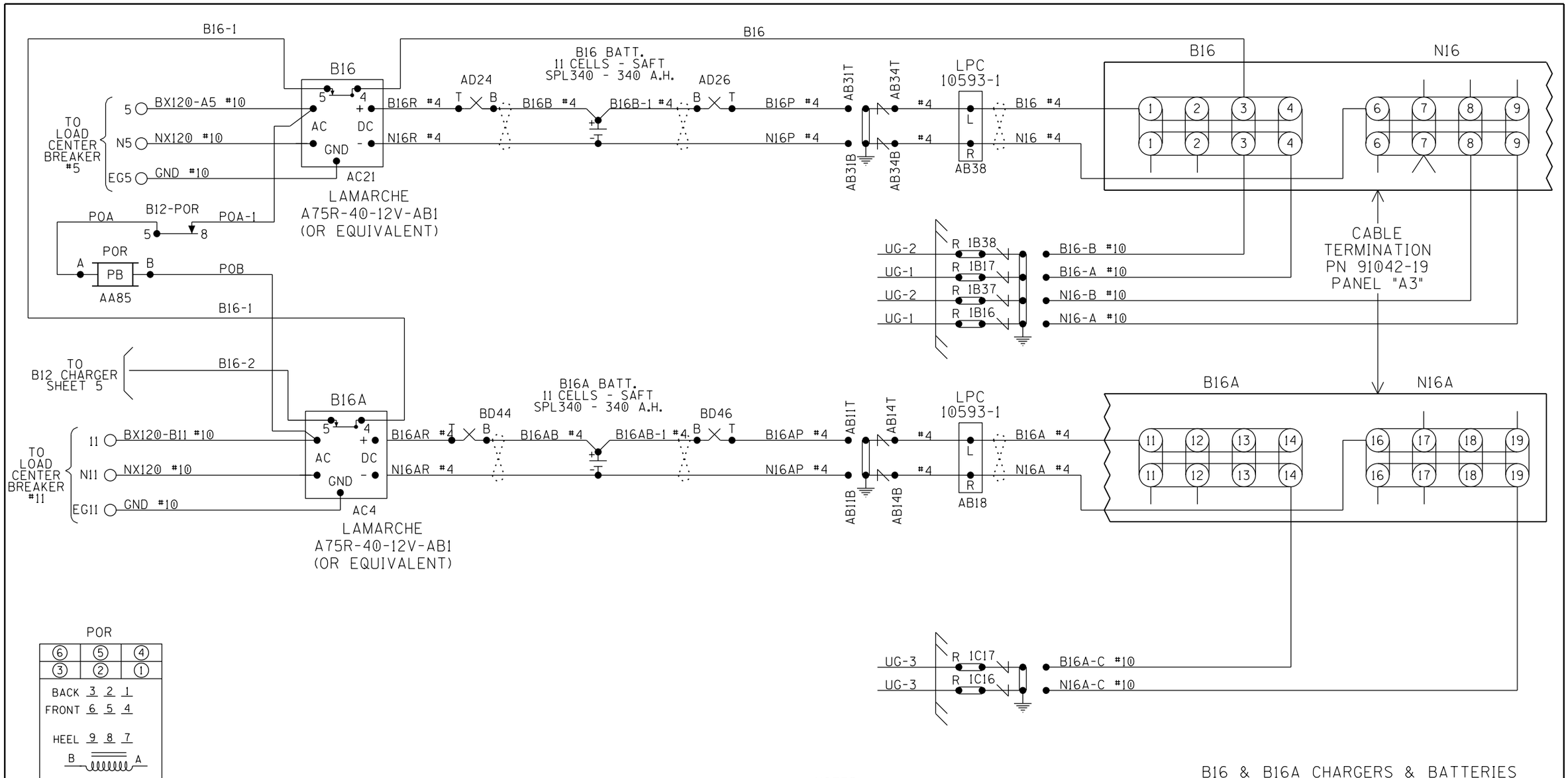

B16 & B16A CHARGERS & BATTERIES

DESIGNED BY: WJK 10-23-15	NORFOLK SOUTHERN
DRAWN BY: XRL 10-23-15	OFFICE OF ASS'T. VICE PRESIDENT COMM. & SIGNAL, ATLANTA, GA. — M.P.: VC-5.11
CHECKED BY: PEH 10-29-15	BROOKLYN, IL FLGS AT SR-3 & ADAMS ST
IN SERVICE: - -	VC BELT DISTRICT — FILE No. R-
	CADD or DWG. No. XW0784P.06 — SHEET No. 6 of 27

REVISION INITIALS

PROPERTY
NORFOLK SOUTHERN RAILWAY CO.

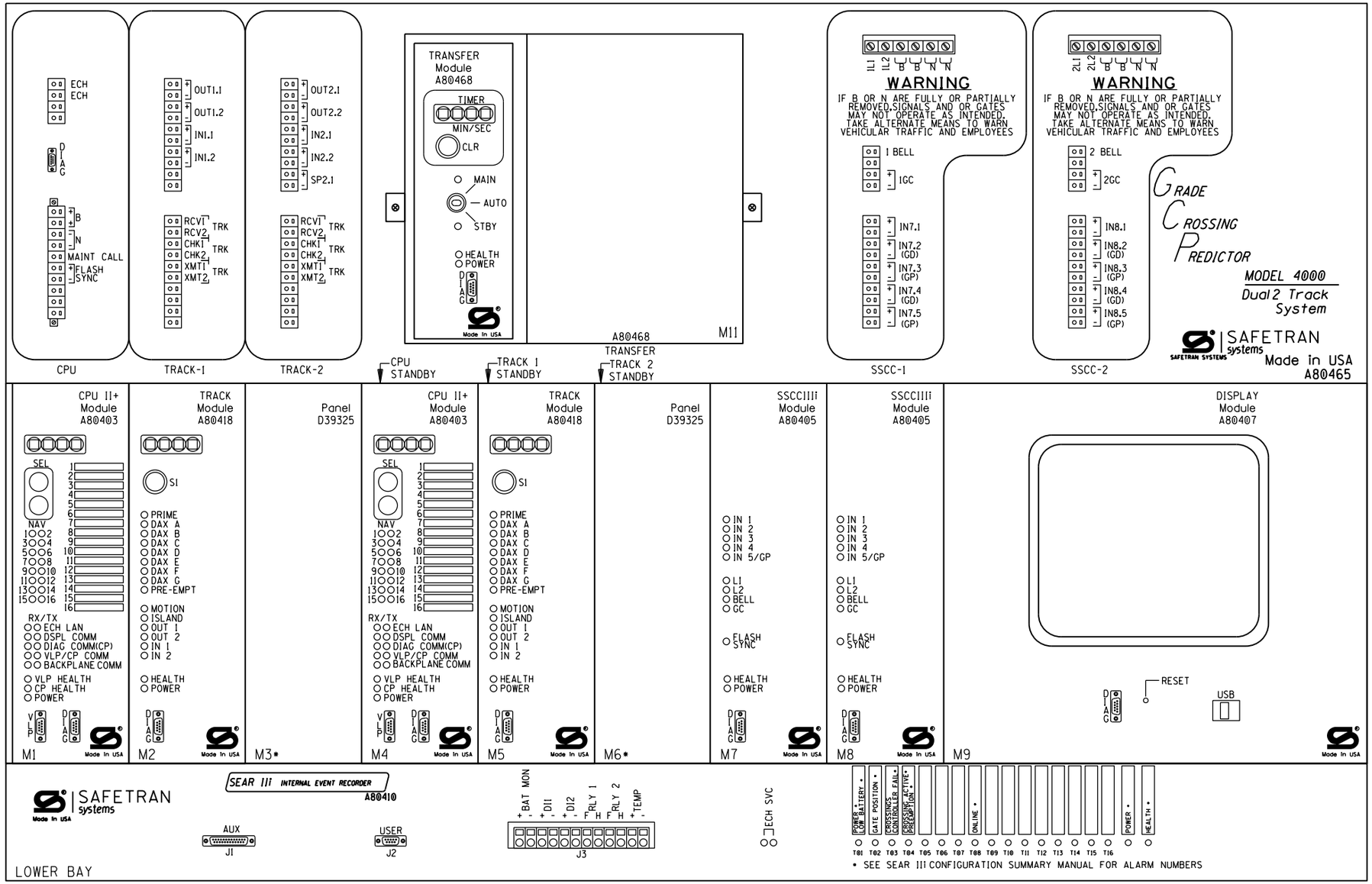

WARNING

REMOVAL OF THE SSCCIIIi MODULE WILL CAUSE THE GATE(S) TO DROP BUT THE LIGHTS WILL NOT ACTIVATE

CAUTION

ASSURE CORRECT POLARITY OF THE SSCCIIIi MODULE OR SEVERE DAMAGE WILL OCCUR.

ATTENTION!

ENSURE THE DISPLAY MODULE HEATER IS DISABLED. LEAVING THE DISPLAY HEATER ENABLED WILL REDUCE THE AMOUNT OF BATTERY STANDBY TIME IN THE EVENT OF AN AC POWER FAILURE.

HEATER FUNCTION IS JUMPER SELECTABLE ON THE DISPLAY MODULE BOARD.
THREE OPTIONS ARE AVAILABLE:
NORMAL LCD HTR (DEFAULT)
HI CURRENT
NO JUMPER (HEATER DISABLED)

* = MAIN AND STANDBY MAY USE RIO IN TRACK 2 SLOTS (M3 AND M6)

4000 GCP 2-TK CHASSIS & MODULE LAYOUT

DESIGNED BY: WJK 10-23-15	NORFOLK SOUTHERN		
DRAWN BY: XRL 10-23-15	OFFICE OF ASS'T. VICE PRESIDENT COMM. & SIGNAL, ATLANTA, GA.	M.P.: VC-5.11	
CHECKED BY: PEH 10-29-15	BROOKLYN, IL FLGS AT SR-3 & ADAMS ST		
IN SERVICE: - -	VC BELT DISTRICT	FILE No. R-	
	CADD or DWG. No. XW0784P.07	SHEET No. 7 of 27	

REVISION INITIALS										

PROPERTY
NORFOLK SOUTHERN RAILWAY CO.

Program Report

Location and SIN

DOT Number: 724534T
Milepost Number: VC-5.11
Site Name: SR-3 AND ADAMS ST

SIN: 755053403616

MCF and Template Selection

MCF Name: GCP-T6X-02-1.mcf
MCF Revision: 021
MCFCRC: 6076E435

Template = 1A:6 Trk Bi

Check Numbers

Office Check No. (DT 4.6.0): 0F4076E8
Office Check Number: 0F4076E8
Config. Check Number: 0D54BADA
(Based on MCF Revision 021)

Program

BASIC: module configuration
Track 1 Slot = Track
Track 2/RIO 1 Slot = Not Used
Track 3 Slot = Not Used
Track 4 Slot = Not Used
Track 5/RIO 2 Slot = Not Used
Track 6/RIO 3 Slot = Not Used
SSCC-1 Slot = SSCC3i
SSCC-2 Slot = SSCC3i
SEAR Used = Yes

BASIC: MS/GCP operation
Track 1: MS/GCP Operation = Yes

BASIC: island operation
Track 1: Island Used = Internal

BASIC: preemption
Preempt Logic = No

BASIC: radio Dax links
Radio DAX link A Used = No
Radio DAX link B Used = No

BASIC: Vital Comms links
Vital Comms link 1 Used = No
Vital Comms link 2 Used = No

PREDICTORS: track 1
Track 1: Prime Used = Yes
Track 1: Dax A Used = No
Track 1: Dax B Used = No
Track 1: Dax C Used = No
Track 1: Dax D Used = No
Track 1: Dax E Used = No
Track 1: Dax F Used = No
Track 1: Dax G Used = No

GCP: track 1
Track 1: GCP Freq Category = Standard
Track 1: GCP Frequency = 970 Hz
Track 1: Approach Distance = 1400 ft
Track 1: Uni/Bi/Sim-Bidirnl = Bidirnl
Track 1: GCP Transmit Level = Medium
Track 1: Island Connection = Isl1
Track 1: Island Distance = 413 ft *
Track 1: Computed Distance = 9999 ft
Track 1: Linearization Steps = 100

GCP: track 1 enhanced det
Track 1: Inbound PS Sensitivity = Off
Track 1: Speed Limiting Used = Yes
Track 1: Outbound False Act Lvl = Normal
Track 1: Outbound PS Timer = 20 sec
Track 1: Trailing Switch Logic = On
Track 1: Post Joint Detn Time = 15 sec
Track 1: Adv Appr Predn = No
Track 1: Cancel Pickup Delay = This Isl

GCP: track 1 prime
Track 1: Prime Warning Time = 30 sec
Track 1: Prime Offset Distance = 0 ft
Track 1: Switch MS EZ Level = 10
Track 1: Prime MS/GCP Mode = Pred
Track 1: Prime Pickup Delay = 15 sec
Track 1: Prime UAX = Not Used

GCP: track 1 pos start
Track 1: Positive Start = Off
Track 1: Sudden Shnt Det Used = No
Track 1: Low EZ Detection Used = No

GCP: track 1 MS Control
Track 1: MS/GCP Ctrl IP Used = No
Track 1: MS Sensitivity Level = 0
Track 1: Compensation Level = 1300
Track 1: Warn Time-Ballast Comp = High
Track 1: Low EX Adjustment = 39
Track 1: Bidirn Dax Passthru = No
Track 1: False Act on Train Stop = No
Track 1: EX Limiting Used = Yes
Track 1: EZ Correction Used = Yes

ISLAND: track 1
Track 1: Isl Frequency = 2.14 kHz
Track 1: Pickup Delay (2s +) = 0 sec
Track 1: Isl Enable IP Used = No

AND: track Anding
AND 1 XR Used = Yes
AND 2 Used = No
AND 3 Used = No
AND 4 Used = No
AND 5 Used = No
AND 6 Used = No
AND 7 Used = No
AND 8 Used = No

AND: AND 1 XR
AND 1 XR Track 1 = Prime
AND 1 Enable Used = Yes
And 1 Enable Pickup = 5 sec
AND 1 Enable Drop = 0 sec
AND 1 Wrap Used = No

ADVANCED: MS restart
MS/GCP Restart Used = No

ADVANCED: out of service
OOS Control = Display+OOS IPs
OOS Timeout = Yes
OOS Timeout = 1 hrs

ADVANCED: out of service 2
T1 OOS Control = OOS Input 1

ADVANCED: track wrap circuits
Wrap LOS Timer = 5 sec
Track 1 Wrap Used = No

ADVANCED: trk 1 overrides
Track 1: All Predictors Override Used = No

ADVANCED: OR logic
OR 1 Used = No
OR 2 Used = No
OR 3 Used = No
OR 4 Used = No

ADVANCED: internal I/O 1
Pass Thrus = No
Int.1 Sets = Not Used
Int.1 Set by = Not Used
Int.2 Sets = Not Used
Int.2 Set by = Not Used
Int.3 Sets = Not Used
Int.3 Set by = Not Used
Int.4 Sets = Not Used
Int.4 Set by = Not Used

ADVANCED: internal I/O 2
Int.5 Sets = Not Used
Int.5 Set by = Not Used
Int.6 Sets = Not Used
Int.6 Set by = Not Used
Int.7 Sets = Not Used
Int.7 Set by = Not Used
Int.8 Sets = Not Used
Int.8 Set by = Not Used

ADVANCED: internal I/O 3
Int.9 Sets = Not Used
Int.9 Set by = Not Used
Int.10 Sets = Not Used
Int.10 Set by = Not Used
Int.11 Sets = Not Used
Int.11 Set by = Not Used
Int.12 Sets = Not Used
Int.12 Set by = Not Used

ADVANCED: internal I/O 4
Int.13 Sets = Not Used
Int.13 Set by = Not Used
Int.14 Sets = Not Used
Int.14 Set by = Not Used
Int.15 Sets = Not Used
Int.15 Set by = Not Used
Int.16 Sets = Not Used
Int.16 Set by = Not Used

ADVANCED: site options
Daylight Savings = On
Units = Standard
Maint Call Rpt IP Used = No
Emergency Activate IP = No
EZ/EX Logging = Change
EZ/EX Point Change = 3

SSCC
Gates Used = Yes
SSCC1+2 GPs Coupled = Yes
Min Activation = 0 sec
Rmt Activation Cancel = 2 min
Bell On Gate Rising = No
Mute Bell On Gate Down = No
SSCCIV Controller Used = No

SSCC: 1
SSCC-1 Activation = AND 1 XR
SSCC-1 Gate Delay = 6 sec
SSCC-1 Number of GPs = 1
SSCC-1 Number of GDs = 2
SSCC 1: Flash Rate = 40
SSCC 1: Low Battery Detection = No
SSCC 1: Flash Sync = master
SSCC 1: Invert Gate Output = No
SSCC 1: Lamp Neutral Test = Off
Aux-1 Xng Ctrl Used = No

* = FIELD VERIFY EXISTING ISLAND DISTANCE.

4000 GCP PROGRAMMING SETUP

DESIGNED BY: WJK 10-23-15	NORFOLK SOUTHERN		
DRAWN BY: XRL 10-23-15	OFFICE OF ASS'T. VICE PRESIDENT COMM. & SIGNAL, ATLANTA, GA.	M.P.: VC-5.11	
CHECKED BY: PEH 10-29-15	BROOKLYN, IL FLGS AT SR-3 & ADAMS ST		
IN SERVICE: - -	VC BELT DISTRICT	FILE No. R-	
	CADD or DWG. No. XW0784P.08	SHEET No. 8 of 27	

REVISION INITIALS											

PROPERTY
NORFOLK SOUTHERN RAILWAY CO.

```
SSCC: 2
SSCC-2 Activation = AND 1 XR
SSCC-2 Gate Delay = 6 sec
SSCC-2 Number of GPs = 0
SSCC-2 Number of GDs = 1
SSCC 2 :Flash Rate = 40
SSCC 2 :Low Battery Detection = No
SSCC 2 :Flash Sync = slave
SSCC 2 :Invert Gate Output = No
SSCC 2 :Lamp NeutralTest = Off
Aux-2 Xng CtrlUsed = No

OUTPUT: assignment page 1
OUT 1.1 = Not Used
OUT 1.2 = Not Used

INPUT: assignment page 1
IN 1.1 = Not Used
IN 1.2 = Not Used

IO: assignment SSCC
OUT GC 1 = Gate Output 1
OUT GC 2 = Gate Output 2
IN 7.1 = Not Used
IN 7.2 = GD 1.2
IN 7.3 = AND 1 XR Enable
IN 7.4 = GD 1.1
IN 7.5 = GP 1.1
IN 8.1 = Out Of Service IP 1
IN 8.2 = Not Used
IN 8.3 = Not Used
IN 8.4 = GD 2.1
IN 8.5 = Not Used

SEAR
SEAR Subnode = 3
DI 1 = Not Used
DI 2 = Not Used
Rly 1 = General1
Rly 2 = Not Used

SEAR: inputs
SP 2.1 = POK 1
SP 3.1 = Not Used
SP 4.1 = Not Used
SP 5.1 = Not Used
SP 6.1 = Not Used

SEAR: slot 1-4 inputs
IN 1.1 = Not Used
IN 1.2 = Not Used
IN 2.1 = Not Used
IN 2.2 = Not Used
IN 3.1 = Not Used
IN 3.2 = Not Used
IN 4.1 = Not Used
IN 4.2 = Not Used

SEAR: inputs slot 5
IN 5.1 = Not Used
IN 5.2 = Not Used

SEAR: inputs slot 6
IN 6.1 = Not Used
IN 6.2 = Not Used

SEAR: slot 7-8 inputs
IN 7.1 = Not Used
IN 8.2 = Not Used
IN 8.3 = Not Used
IN 8.5 = Not Used

SITE: programming
Radio Subnode = 1
Field Password = Off
Low Battery Enabled = Off

Configuration Package File
--------------------------
Filename: xw0784.pac
```

4000 GCP PROGRAMMING SETUP

DESIGNED BY: WJK 10-23-15	NORFOLK SOUTHERN		
DRAWN BY: XRL 10-23-15	OFFICE OF ASS'T. VICE PRESIDENT COMM. & SIGNAL, ATLANTA, GA.	M.P.:	VC-5.11
CHECKED BY: PEH 10-29-15	BROOKLYN, IL FLGS AT SR-3 & ADAMS ST		
IN SERVICE: - -	VC BELT DISTRICT	FILE No.	R-
	CADD or DWG. No. XW0784P.09	SHEET No.	9 of 27

REVISION INITIALS											

PROPERTY
NORFOLK SOUTHERN RAILWAY CO.

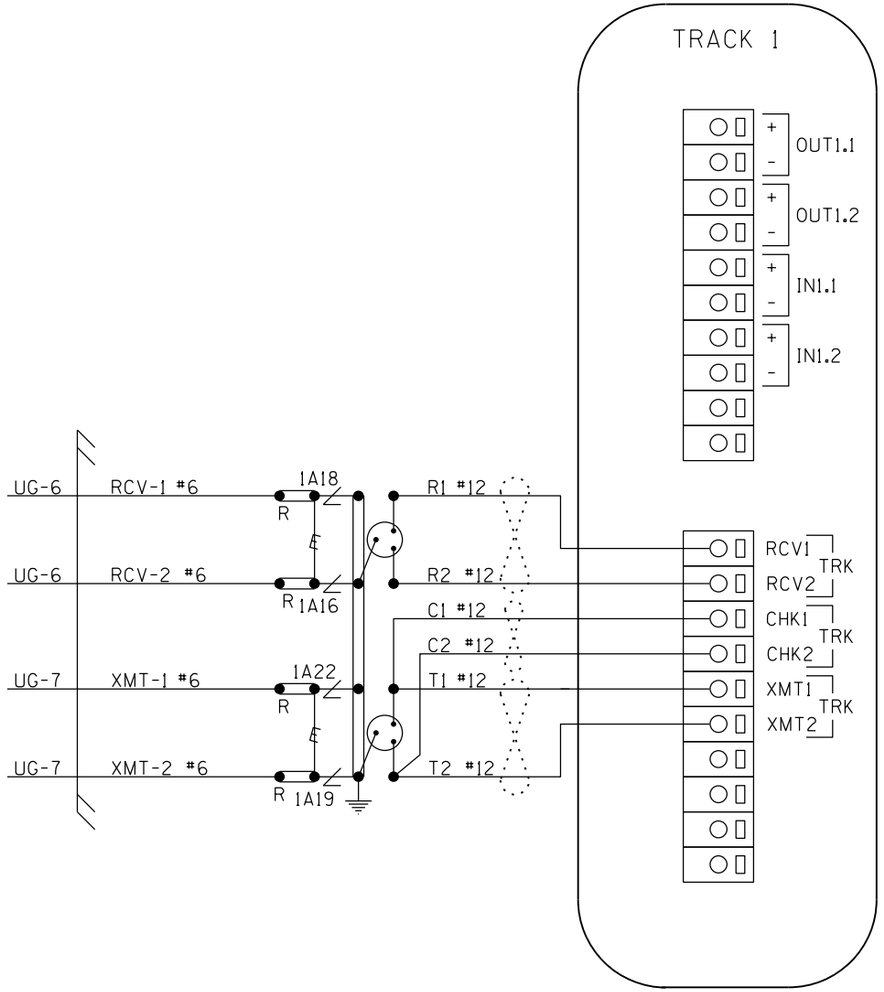

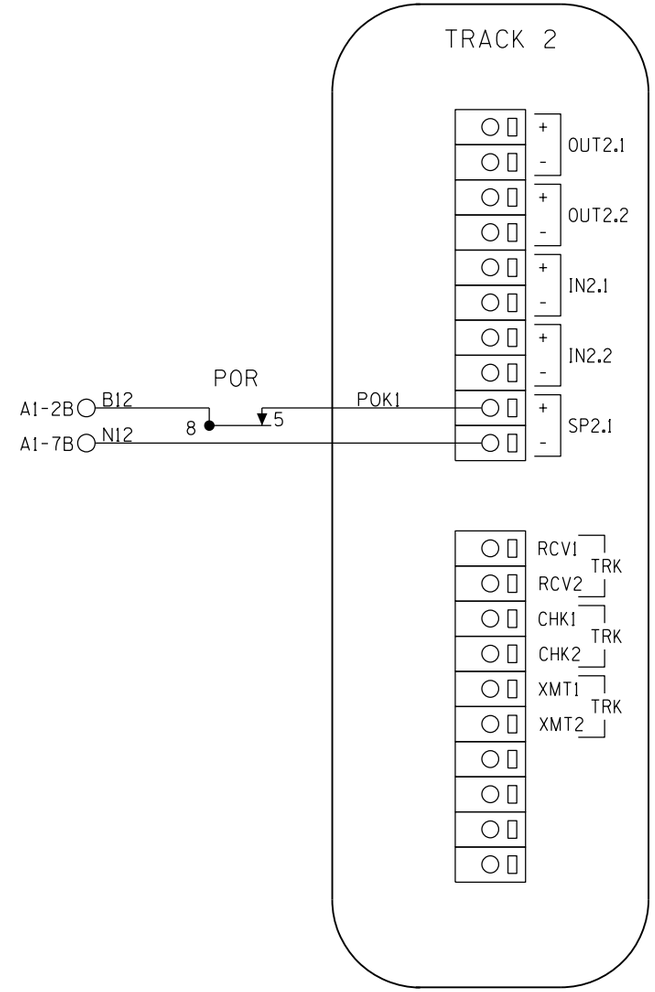

CONNECTORS FOR TRACK MODULES

NOTE:
ALL WIRING TO BE #16AWG
UNLESS NOTED OTHERWISE.

= TWIST

DESIGNED BY: WJK 10-23-15	NORFOLK SOUTHERN		
DRAWN BY: XRL 10-23-15	OFFICE OF ASS'T. VICE PRESIDENT COMM. & SIGNAL, ATLANTA, GA.	M.P.:	VC-5.11
CHECKED BY: PEH 10-29-15	BROOKLYN, IL FLGS AT SR-3 & ADAMS ST		
IN SERVICE: - -	VC BELT DISTRICT	FILE No.	R-
	CADD or DWG. No. XW0784P.10	SHEET No.	10 of 27

REVISION INITIALS										

PROPERTY
NORFOLK SOUTHERN RAILWAY CO.

* SEE SEAR IIi CONFIGURATION SUMMARY MANUAL FOR ALARM NUMBERS

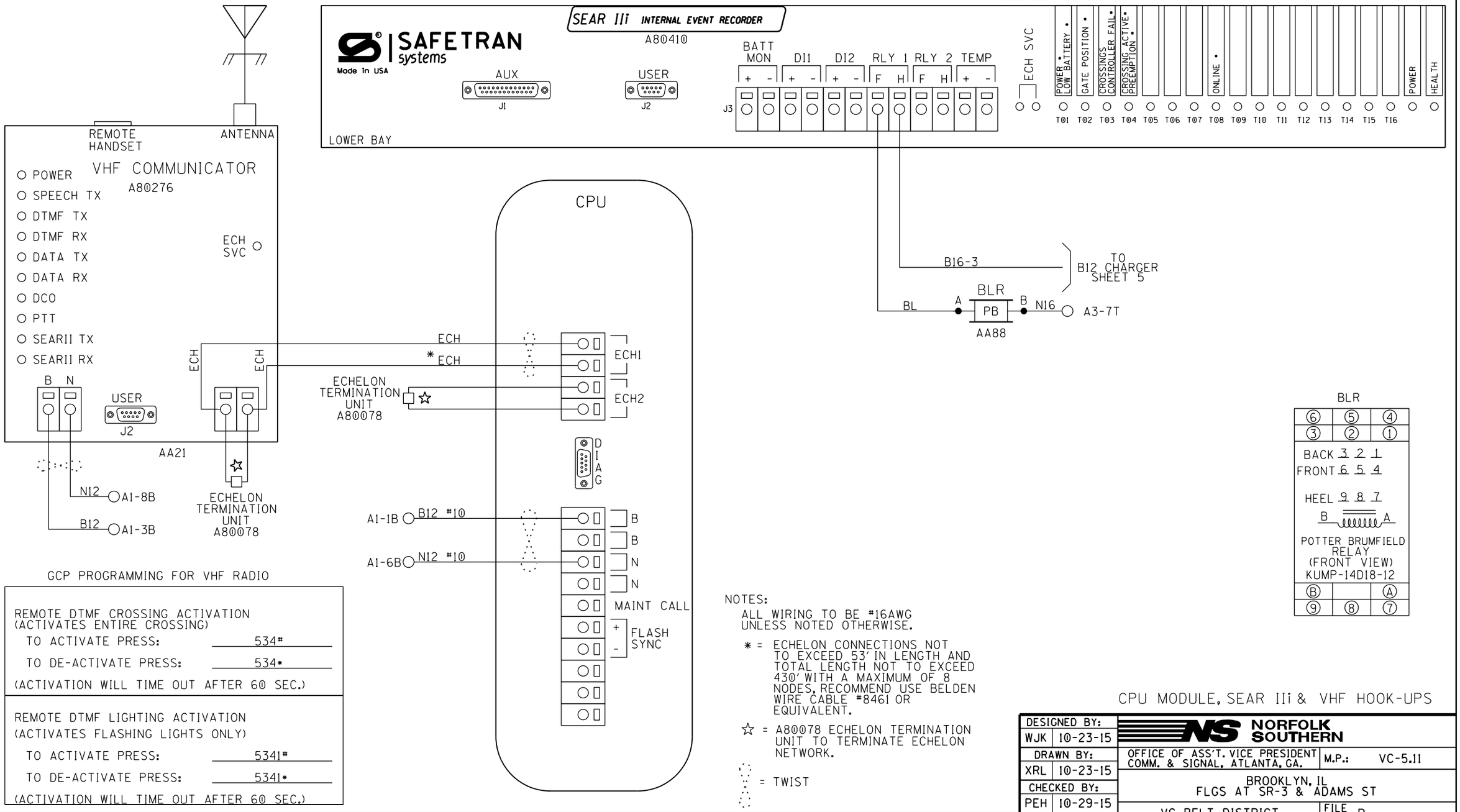

GCP PROGRAMMING FOR VHF RADIO

REMOTE DTMF CROSSING ACTIVATION
(ACTIVATES ENTIRE CROSSING)

TO ACTIVATE PRESS: 534#

TO DE-ACTIVATE PRESS: 534*

(ACTIVATION WILL TIME OUT AFTER 60 SEC.)

REMOTE DTMF LIGHTING ACTIVATION
(ACTIVATES FLASHING LIGHTS ONLY)

TO ACTIVATE PRESS: 5341#

TO DE-ACTIVATE PRESS: 5341*

(ACTIVATION WILL TIME OUT AFTER 60 SEC.)

NOTES:

ALL WIRING TO BE #16AWG UNLESS NOTED OTHERWISE.

* = ECHELON CONNECTIONS NOT TO EXCEED 53' IN LENGTH AND TOTAL LENGTH NOT TO EXCEED 430' WITH A MAXIMUM OF 8 NODES. RECOMMEND USE BELDEN WIRE CABLE #8461 OR EQUIVALENT.

☆ = A80078 ECHELON TERMINATION UNIT TO TERMINATE ECHELON NETWORK.

= TWIST

CPU MODULE, SEAR IIi & VHF HOOK-UPS

DESIGNED BY: WJK 10-23-15	NORFOLK SOUTHERN		
DRAWN BY: XRL 10-23-15	OFFICE OF ASS'T. VICE PRESIDENT COMM. & SIGNAL, ATLANTA, GA.	M.P.:	VC-5.11
CHECKED BY: PEH 10-29-15	BROOKLYN, IL FLGS AT SR-3 & ADAMS ST		
IN SERVICE: - -	VC BELT DISTRICT	FILE No.	R-
	CADD or DWG. No. XW0784P.11	SHEET No.	11 of 27

REVISION INITIALS										

PROPERTY
NORFOLK SOUTHERN RAILWAY CO.

	SITE SET UP PROCEDURE	
	FUNCTION	LED DISPLAY
	DATE/TIME	
	AUTOMATIC DST ADJUSTMENT	YES
	TIME ZONE	EST
	SITE NAME	SR-3 & ADAMS ST.
	MILEPOST	VC-5.11
	DOT #	724534T
	TESTER TYPE	CROSSING
	DATE FORMAT	MM-DD-YYYY
	TEMP FORMAT	FAHRENHEIT
	INDICATE HOLD (SEC)	0
	INDICATE REFRESH (SEC)	60
	SITE ATCS	7.550.534.036.03.01
	SITE TYPE	NO COMMUNICATION
**	OFFICE ATCS ADDRESS	2.550.00.0000
**	PRIMARY HOP ADDR	7.RRR.LLL.GGG.XX.XX
**	BACKUP HOP ADDR 1	7.RRR.LLL.GGG.XX.XX
**	BACKUP HOP ADDR 2	7.RRR.LLL.GGG.XX.XX
**	POLL ID	1
**	MODE	GEN/ATCS
**	WAMS XID	DISABLED
**	OFFICE COMM DEVICE	MCM (ECHELON)
**	RADIO ATCS ADDR	7.RRR.LLL.GGG.01.01
**	PHONE #	(OFFICE NUMBER)
**	INIT STRING	
**	FIELD COMM DEVICE	NONE
***	USER PORT BAUD	57600
***	USER PORT DATA BITS	8
***	USER PORT PARITY	NONE
***	USER PORT STOP BITS	1
***	USER PORT FLOW CONTROL	NONE
***	AUX PORT BAUD	9600
***	AUX PORT DATA BITS	8
***	AUX PORT PARITY	NONE
***	AUX PORT STOP BITS	1
***	AUX PORT FLOW CONTROL	NONE

	CONTROL SYSTEM CONFIGURATION MENU QUESTIONS	
	THE QUESTION	SELECT FROM MENU OPTION
	RESET NAMES AND MODULES?	YES
	RAILROAD NUMBER	550
	CROSSING CONFIGURATION	NORMAL
	AND 1 USED AS XR?	YES
	AND 2 USED AS XR?	NO
	AND 3 USED AS XR?	NO
	AND 4 USED AS XR?	NO
	AND 5 USED AS XR?	NO
	AND 6 USED AS XR?	NO
	AND 7 USED AS XR?	NO
	AND 8 USED AS XR?	NO
*	XR CONTROLLED BY FOREIGN RR	NO
	ENTRANCE GATES	3
	85% VOLTAGE RELAY OUT	YES
*	GATES CONTROLLED BY FOREIGN RR	NO
	BATTERY BANKS	3
	BATTERY MON USED	NO
	PREEMPTION	NO
	INTERNAL CROSSING CONTROLLERS	2
	EXTERNAL CROSSING CONTROLLERS	0
	VHF COMMUNICATOR	YES
	DTMF ACTIVATION	YES
****	ACTIVATION CODE	534
	ACTIVATION TIMEOUT (SECONDS)	60
	ILOD MODULES	0
*****	ANY LED BULBS USED	YES
	VHF VOICE CHANNEL	2
	VHF DATA CHANNEL	2
	USE CELL MODEM NON-CRITICAL FEATURE	NO

PROGRAM MENU QUESTIONS	PROGRAM
EDIT DIGITAL INPUTS	NO
EDIT BATTERIES	NO
EDIT RELAYS	NO
EDIT INDICATOR LEDS	NO
EDIT TEST LEDS	NO
EDIT ILOD SENSORS	NO
EDIT VHF SETTINGS	NO
GCP4K ATCS SUBNODE	16

NOTES:

* = DISPLAYED IF CROSSING CONFIGURATION IS SPLIT GATE.

** = IF SITE TYPE = NO COMMUNICATION, THEN THESE OPTIONS ARE NOT DISPLAYED.

*** = THESE SETTINGS SHOULD BE LEFT AT THE DEFAULT SETTING.

**** = USE LAST 3 NUMBERS FROM DOT NUMBER.

***** = IF ILOD MODULE >0.

TO CONFIGURE SEARIIi PRESS SITE SETUP KEY.
USE ARROW KEYS TO MAKE SELECTION,
PRESS ENTER AFTER SELECTION HAS BEEN MADE.

SEAR IIi PROGRAMMING SETUP

DESIGNED BY: WJK 10-23-15	NORFOLK SOUTHERN		
DRAWN BY: XRL 10-23-15	OFFICE OF ASS'T. VICE PRESIDENT COMM. & SIGNAL, ATLANTA, GA.	M.P.: VC-5.11	
CHECKED BY: PEH 10-29-15	BROOKLYN, IL FLGS AT SR-3 & ADAMS ST		
IN SERVICE: - -	VC BELT DISTRICT	FILE No. R-	
	CADD or DWG. No. XW0784P.12	SHEET No. 12 of 27	

REVISION INITIALS											

PROPERTY
NORFOLK SOUTHERN RAILWAY CO.

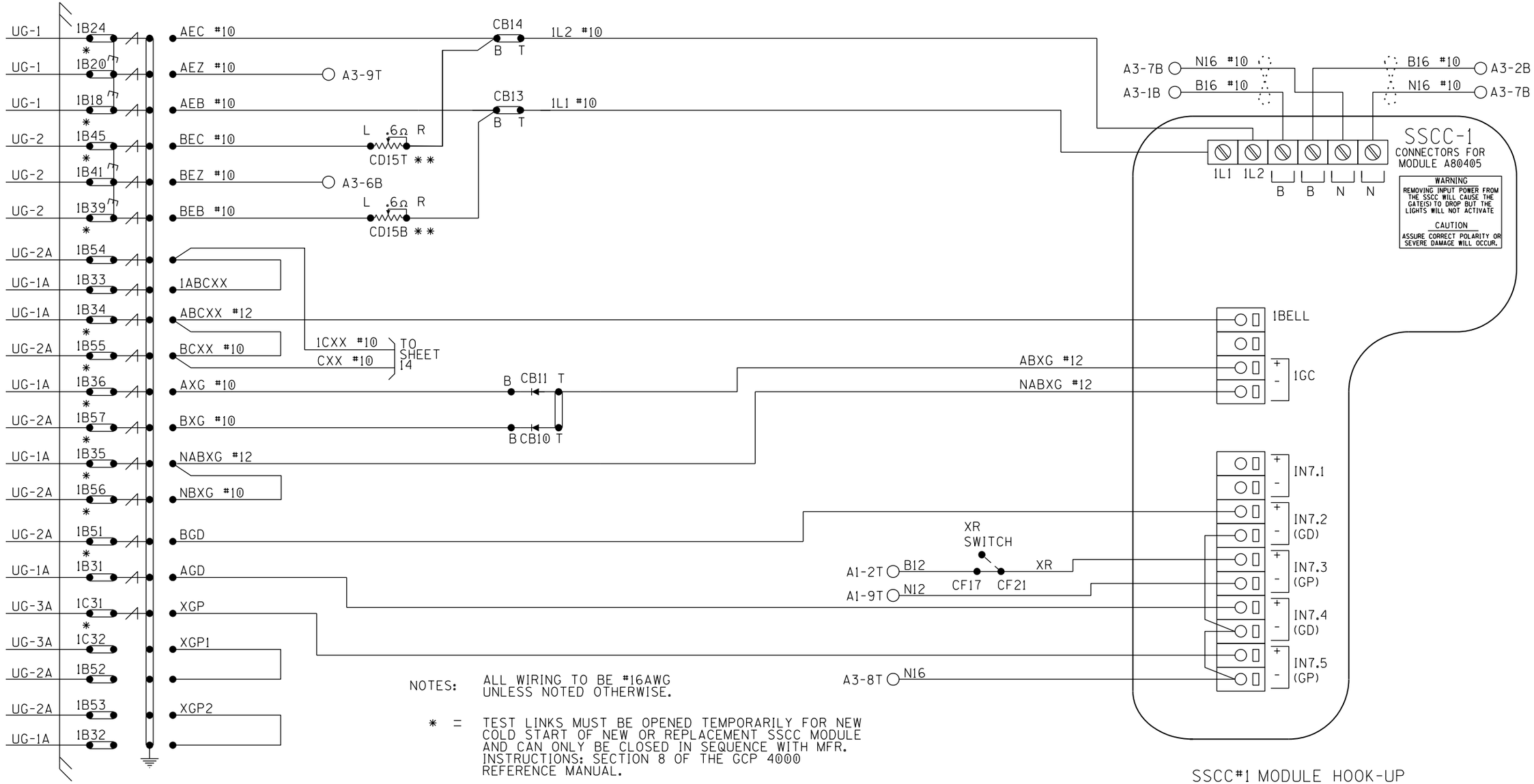

NOTES: ALL WIRING TO BE #16AWG UNLESS NOTED OTHERWISE.

* = TEST LINKS MUST BE OPENED TEMPORARILY FOR NEW COLD START OF NEW OR REPLACEMENT SSCC MODULE AND CAN ONLY BE CLOSED IN SEQUENCE WITH MFR. INSTRUCTIONS: SECTION 8 OF THE GCP 4000 REFERENCE MANUAL.

** = RESISTORS TO BE INSTALLED TO LAMPS WITH SHORTEST CABLE RUN

= TWIST

SSCC#1 MODULE HOOK-UP

DESIGNED BY: WJK 10-23-15	NORFOLK SOUTHERN		
DRAWN BY: XRL 10-23-15	OFFICE OF ASS'T. VICE PRESIDENT COMM. & SIGNAL, ATLANTA, GA.	M.P.:	VC-5.11
CHECKED BY: PEH 10-29-15	BROOKLYN, IL FLGS AT SR-3 & ADAMS ST		
IN SERVICE: - -	VC BELT DISTRICT	FILE No.	R-
	CADD or DWG. No. XW0784P.13	SHEET No.	13 of 27

REVISION INITIALS											

PROPERTY
NORFOLK SOUTHERN RAILWAY CO.

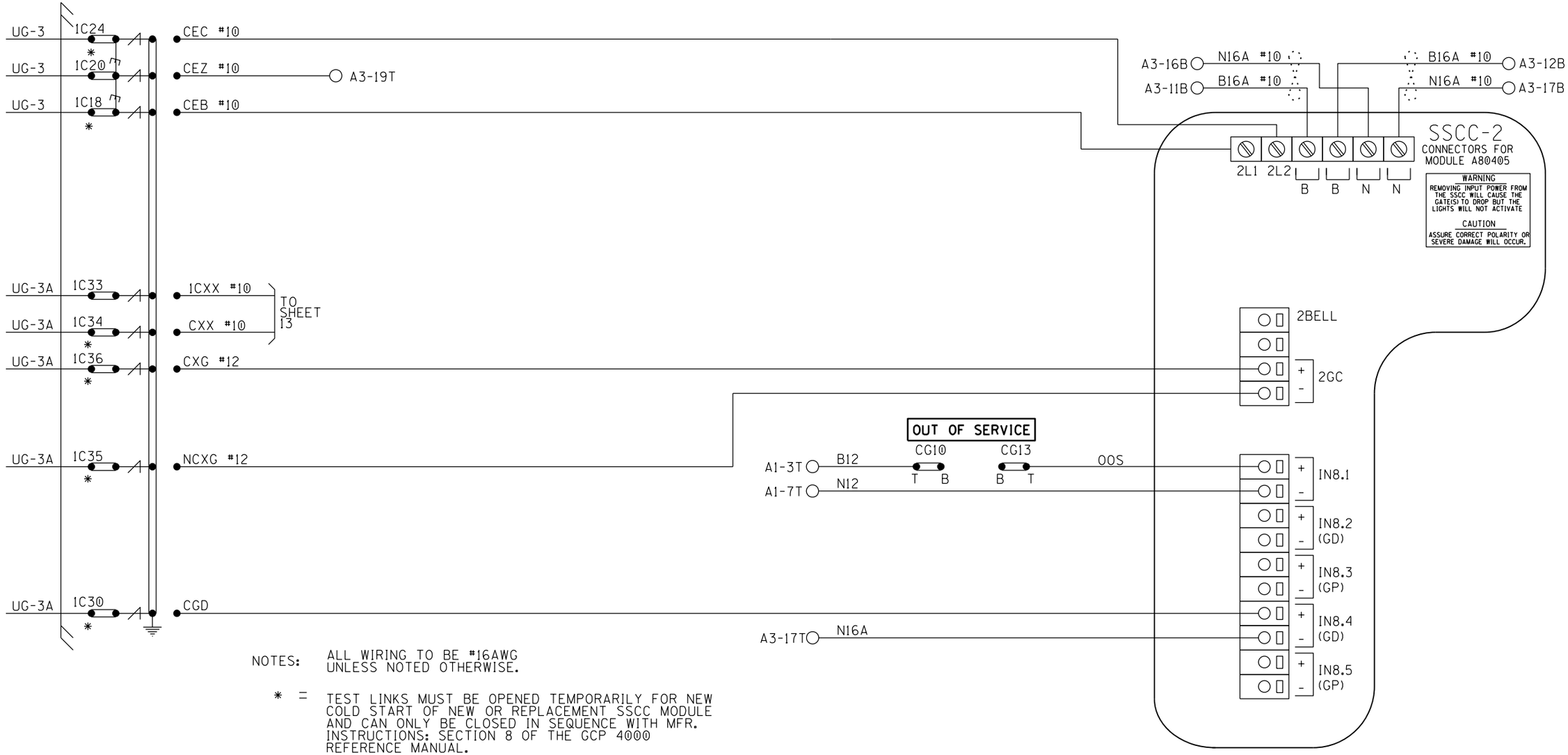

NOTES: ALL WIRING TO BE #16AWG UNLESS NOTED OTHERWISE.

* = TEST LINKS MUST BE OPENED TEMPORARILY FOR NEW COLD START OF NEW OR REPLACEMENT SSCC MODULE AND CAN ONLY BE CLOSED IN SEQUENCE WITH MFR. INSTRUCTIONS: SECTION 8 OF THE GCP 4000 REFERENCE MANUAL.

** = RESISTORS TO BE INSTALLED TO LAMPS WITH SHORTEST CABLE RUN

= TWIST

SSCC#2 MODULE HOOK-UP

DESIGNED BY: WJK 10-23-15	NORFOLK SOUTHERN		
DRAWN BY: XRL 10-23-15	OFFICE OF ASS'T. VICE PRESIDENT COMM. & SIGNAL, ATLANTA, GA.	M.P.:	VC-5.11
CHECKED BY: PEH 10-29-15	BROOKLYN, IL FLGS AT SR-3 & ADAMS ST		
IN SERVICE: - -	VC BELT DISTRICT	FILE No.	R-
	CADD or DWG. No. XW0784P.14	SHEET No.	14 of 27

REVISION INITIALS											

PROPERTY
NORFOLK SOUTHERN RAILWAY CO.

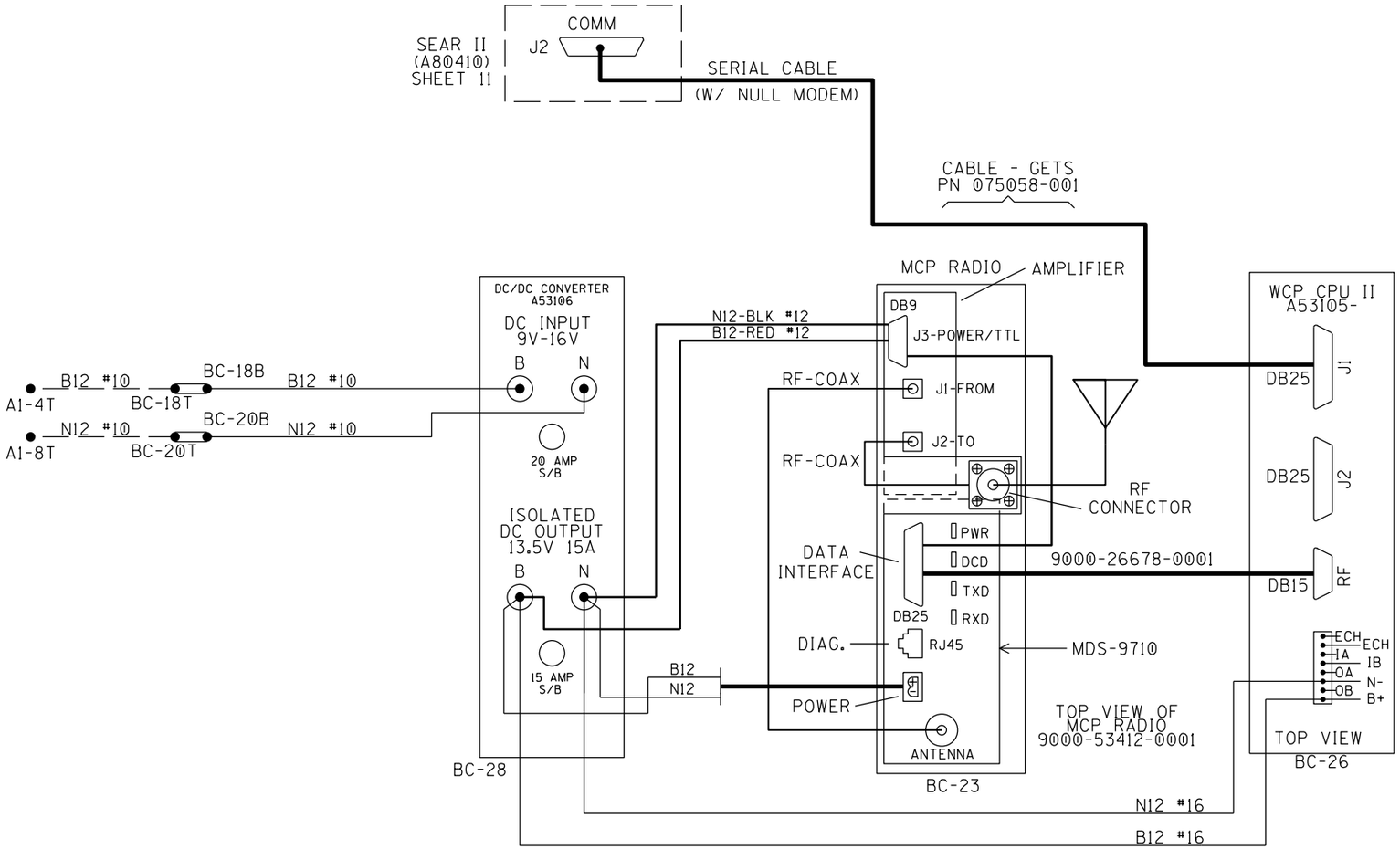

DATA RADIO

DESIGNED BY: WJK 10-23-15	NORFOLK SOUTHERN		
DRAWN BY: XRL 10-23-15	OFFICE OF ASS'T. VICE PRESIDENT COMM. & SIGNAL, ATLANTA, GA.	M.P.:	VC-5.11
CHECKED BY: PEH 10-29-15	BROOKLYN, IL FLGS AT SR-3 & ADAMS ST		
IN SERVICE: - -	VC BELT DISTRICT	FILE No.	R-
	CADD or DWG. No. XW0784P.15	SHEET No.	15 of 27

REVISION INITIALS										

PROPERTY
NORFOLK SOUTHERN RAILWAY CO.

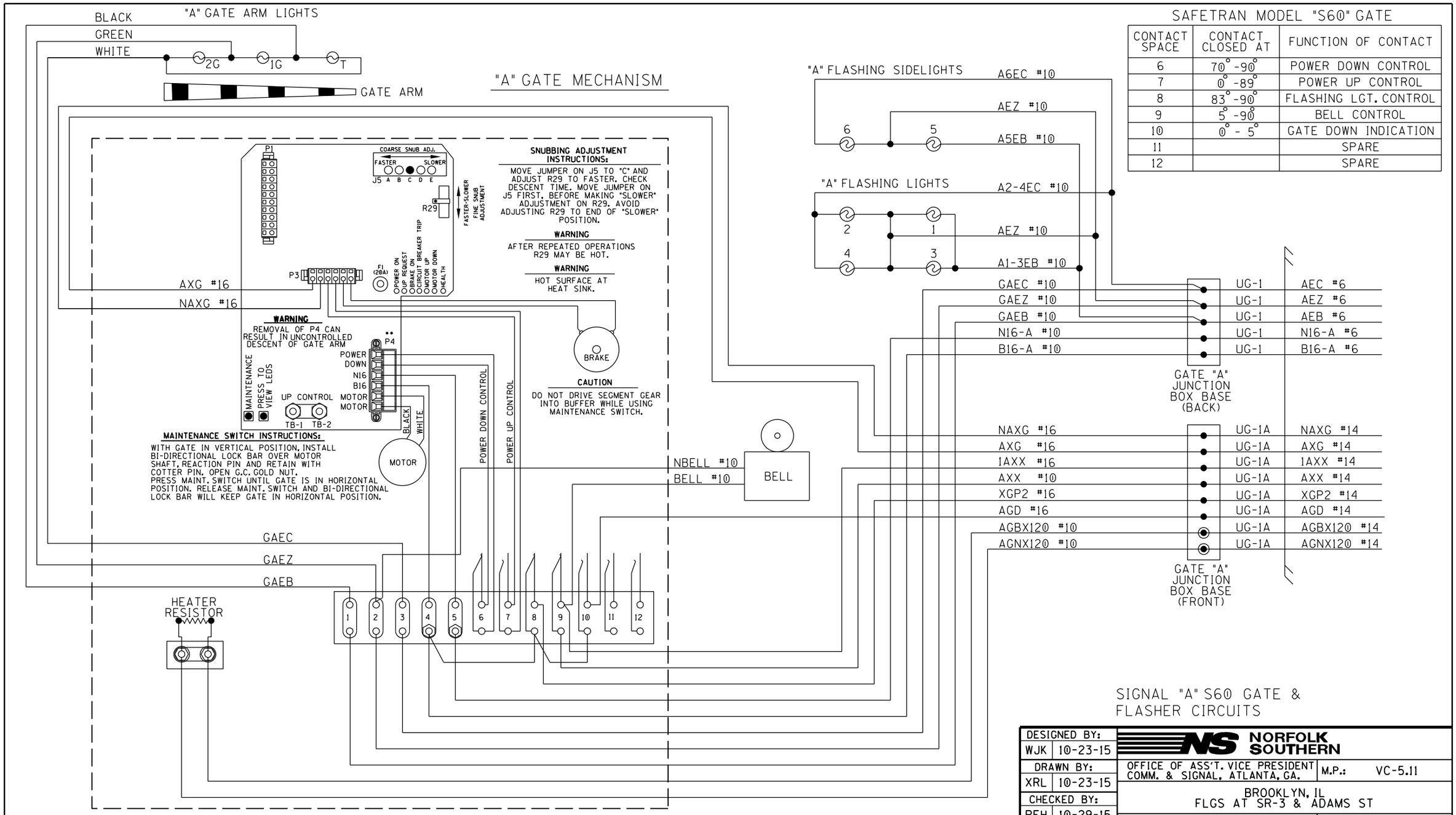

SAFETRAN MODEL "S60" GATE

CONTACT SPACE	CONTACT CLOSED AT	FUNCTION OF CONTACT
6	70° -90°	POWER DOWN CONTROL
7	0° -89°	POWER UP CONTROL
8	83° -90°	FLASHING LGT. CONTROL
9	5° -90°	BELL CONTROL
10	0° - 5°	GATE DOWN INDICATION
11		SPARE
12		SPARE

SIGNAL "A" S60 GATE & FLASHER CIRCUITS

DESIGNED BY: WJK 10-23-15	NORFOLK SOUTHERN		
DRAWN BY: XRL 10-23-15	OFFICE OF ASS'T. VICE PRESIDENT COMM. & SIGNAL, ATLANTA, GA.	M.P.:	VC-5.11
CHECKED BY: PEH 10-29-15	BROOKLYN, IL FLGS AT SR-3 & ADAMS ST		
IN SERVICE: - -	VC BELT DISTRICT	FILE No.	R-
	CADD or DWG. No. XW0784P.16	SHEET No.	16 of 27

REVISION INITIALS

PROPERTY
NORFOLK SOUTHERN RAILWAY CO.

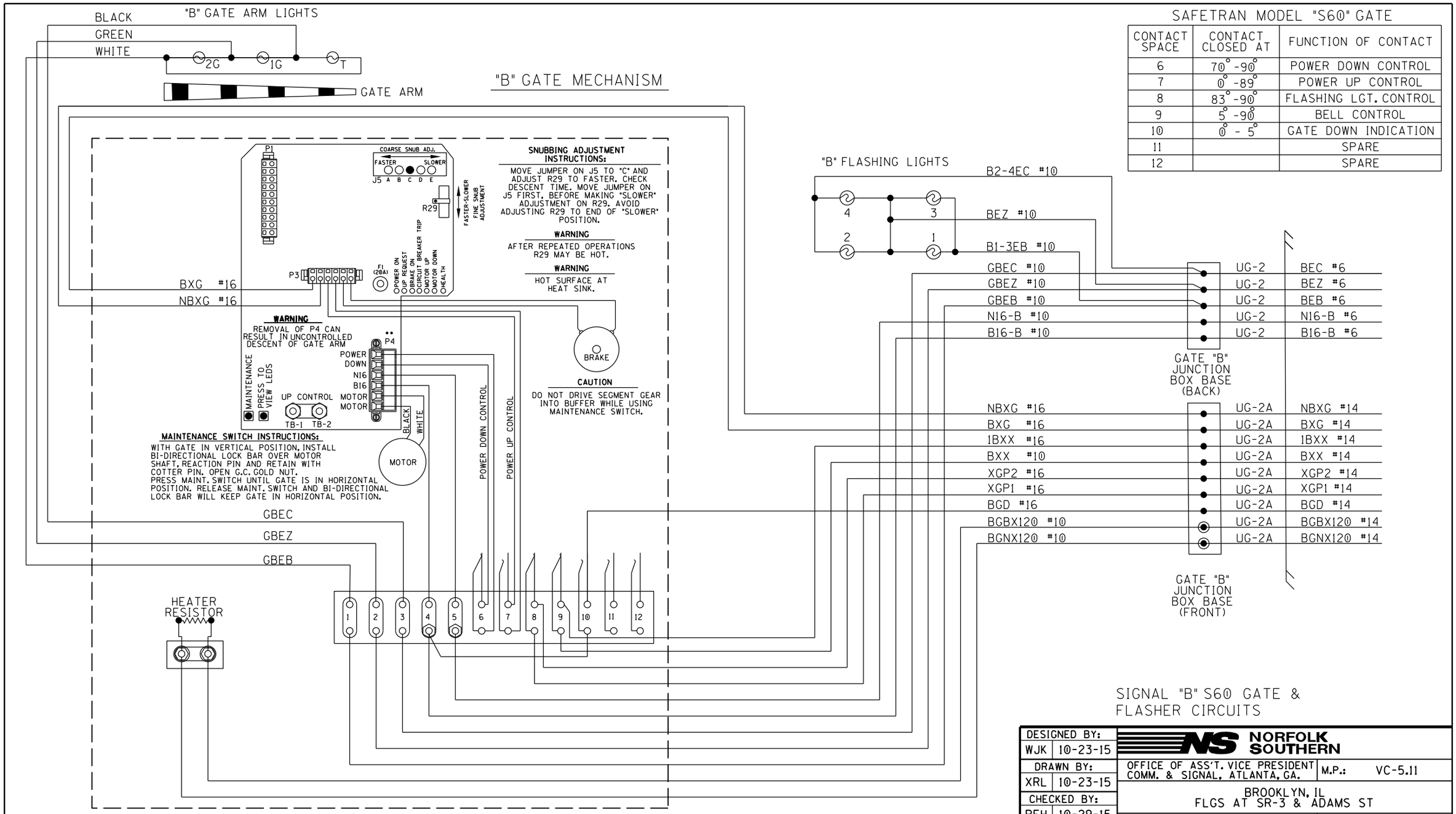

SAFETRAN MODEL "S60" GATE

CONTACT SPACE	CONTACT CLOSED AT	FUNCTION OF CONTACT
6	70° -90°	POWER DOWN CONTROL
7	0° -89°	POWER UP CONTROL
8	83° -90°	FLASHING LGT. CONTROL
9	5° -90°	BELL CONTROL
10	0° - 5°	GATE DOWN INDICATION
11		SPARE
12		SPARE

SIGNAL "B" S60 GATE & FLASHER CIRCUITS

DESIGNED BY: WJK 10-23-15	NORFOLK SOUTHERN		
DRAWN BY: XRL 10-23-15	OFFICE OF ASS'T. VICE PRESIDENT COMM. & SIGNAL, ATLANTA, GA.	M.P.:	VC-5.11
CHECKED BY: PEH 10-29-15	BROOKLYN, IL FLGS AT SR-3 & ADAMS ST		
IN SERVICE: - -	VC BELT DISTRICT	FILE No.	R-
	CADD or DWG. No. XW0784P.17	SHEET No.	17 of 27

REVISION INITIALS

PROPERTY
NORFOLK SOUTHERN RAILWAY CO.

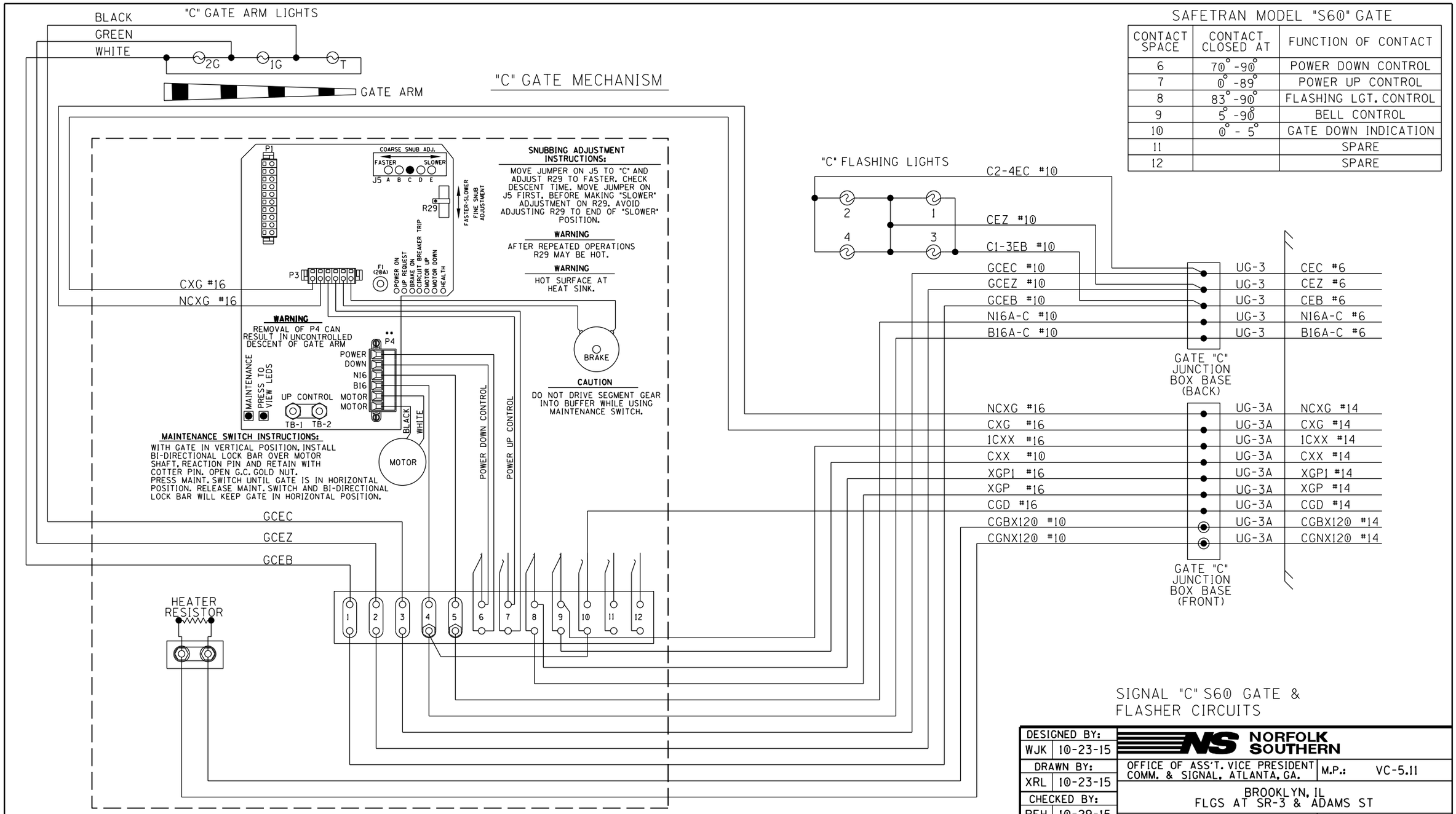

SAFETRAN MODEL "S60" GATE

CONTACT SPACE	CONTACT CLOSED AT	FUNCTION OF CONTACT
6	70° -90°	POWER DOWN CONTROL
7	0° -89°	POWER UP CONTROL
8	83° -90°	FLASHING LGT. CONTROL
9	5° -90°	BELL CONTROL
10	0° - 5°	GATE DOWN INDICATION
11		SPARE
12		SPARE

SIGNAL "C" S60 GATE & FLASHER CIRCUITS

DESIGNED BY: WJK 10-23-15	NORFOLK SOUTHERN		
DRAWN BY: XRL 10-23-15	OFFICE OF ASS'T. VICE PRESIDENT COMM. & SIGNAL, ATLANTA, GA.	M.P.:	VC-5.11
CHECKED BY: PEH 10-29-15	BROOKLYN, IL FLGS AT SR-3 & ADAMS ST		
IN SERVICE: - -	VC BELT DISTRICT	FILE No.	R-
	CADD or DWG. No. XW0784P.18	SHEET No.	18 of 27

REVISION INITIALS

PROPERTY
NORFOLK SOUTHERN RAILWAY CO.

LEFT TWO ROWS TERMINAL BOARD 1

"1A" "1B"

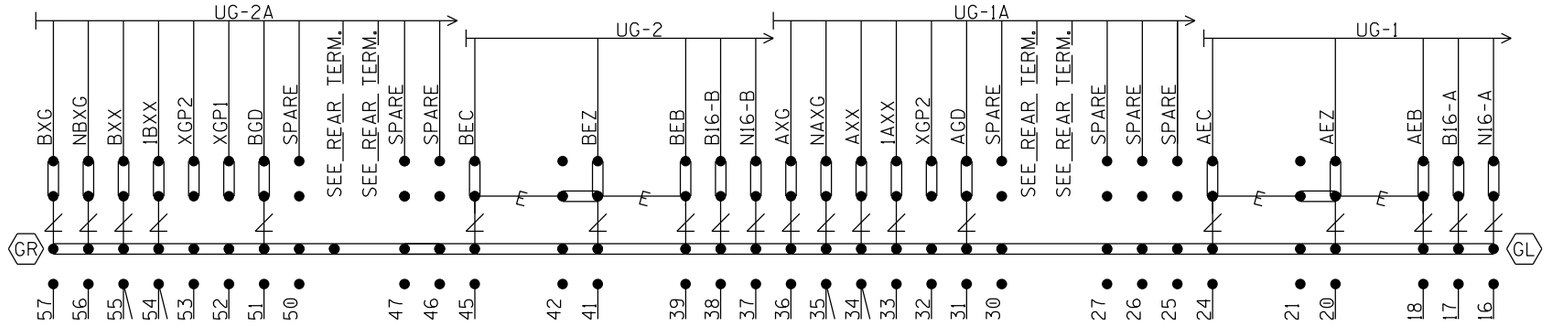

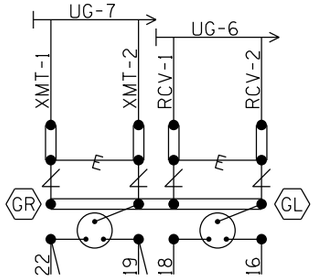

NOTE: INSTALL TEST LINKS ON ALL TRACK WIRES AND ON ALL LOW VOLTAGE UNDERGROUND CABLE TERMINATIONS.

= Heavy Duty Equalizer (022700-1X)

= Clearview Lightning Arrester (022585-1X)

= LPC-10560-51

GR / GL = TERMINALS GROUNDED TO SHIELD. 4 POST BLOCKS USE EITHER - GR - SERMMI PART NO. 61278 GL - SERMMI PART NO. 61278-1.

SEE FARADAY SHIELD DETAILS - 1A & 1B FOR HOW THIS PORTION OF THE FARADAY SHIELD IS PREDRILLED. ONLY INSTALL AND USE THE TERMINALS NEEDED.

BACKBOARD 1A & 1B

DESIGNED BY: WJK 10-23-15	NORFOLK SOUTHERN		
DRAWN BY: XRL 10-23-15	OFFICE OF ASS'T. VICE PRESIDENT COMM. & SIGNAL, ATLANTA, GA.	M.P.:	VC-5.11
CHECKED BY: PEH 10-29-15	BROOKLYN, IL FLGS AT SR-3 & ADAMS ST		
IN SERVICE: - -	VC BELT DISTRICT	FILE No.	R-
	CADD or DWG. No. XW0784P.19	SHEET No.	19 of 27

REVISION INITIALS										

PROPERTY
NORFOLK SOUTHERN RAILWAY CO.

REAR VIEW OF LEFT TWO ROWS TERMINAL BOARD 1

"1A" "1B"

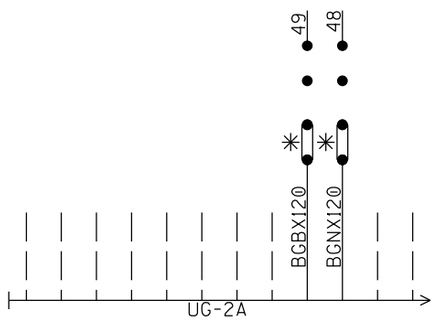

(SEE PREVIOUS SHEET FOR OTHER WIRES IN CABLE)

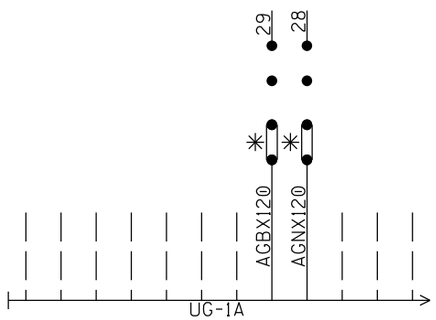

(SEE PREVIOUS SHEET FOR OTHER WIRES IN CABLE)

NOTE: ALL 120VAC AND ABOVE WILL BE WIRED TO THE REAR OF FARADAY BACKBOARD. INSULATED NUTS MUST BE USED ON ALL TERMINALS.

✳ = CLOSED DURING WINTER MONTHS

REAR BACKBOARD 1A & 1B

DESIGNED BY: WJK 10-23-15	NORFOLK SOUTHERN		
DRAWN BY: XRL 10-23-15	OFFICE OF ASS'T. VICE PRESIDENT COMM. & SIGNAL, ATLANTA, GA.	M.P.:	VC-5.11
CHECKED BY: PEH 10-29-15	BROOKLYN, IL FLGS AT SR-3 & ADAMS ST		
IN SERVICE: - -	VC BELT DISTRICT	FILE No.	R-
	CADD or DWG. No. XW0784P.20	SHEET No.	20 of 27

REVISION INITIALS											

PROPERTY
NORFOLK SOUTHERN RAILWAY CO.

RIGHT ROW TERMINAL BOARD 1

"1C"

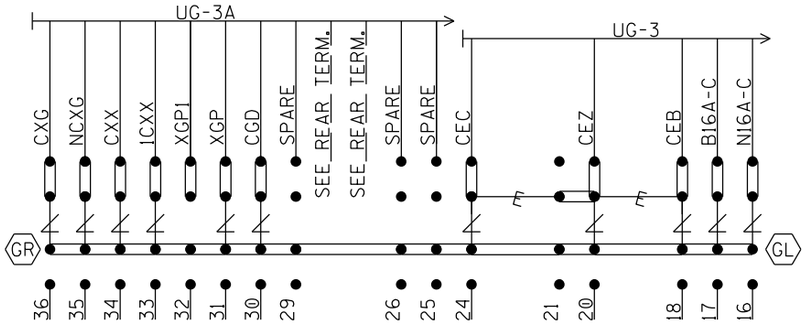

NOTE: INSTALL TEST LINKS ON ALL TRACK WIRES AND ON ALL LOW VOLTAGE UNDERGROUND CABLE TERMINATIONS.

SEE FARADAY SHIELD DETAILS - 1A & 1B FOR HOW THIS PORTION OF THE FARADAY SHIELD IS PREDRILLED. ONLY INSTALL AND USE THE TERMINALS NEEDED.

= Heavy Duty Equalizer (022700-1X)

= Clearview Lightning Arrester (022585-1X)

= LPC-10560-51

GR / GL = TERMINALS GROUNDED TO SHIELD. 4 POST BLOCKS USE EITHER - GR - SERMMI PART NO. 61278 GL - SERMMI PART NO. 61278-1.

BACKBOARD 1C

DESIGNED BY: WJK 10-23-15	NORFOLK SOUTHERN		
DRAWN BY: XRL 10-23-15	OFFICE OF ASS'T. VICE PRESIDENT COMM. & SIGNAL, ATLANTA, GA.	M.P.:	VC-5.11
CHECKED BY: PEH 10-29-15	BROOKLYN, IL FLGS AT SR-3 & ADAMS ST		
IN SERVICE: - -	VC BELT DISTRICT	FILE No.	R-
	CADD or DWG. No. XW0784P.21	SHEET No.	21 of 27

REVISION INITIALS										

PROPERTY
NORFOLK SOUTHERN RAILWAY CO.

REAR OF RIGHT ROW TERMINAL BOARD 1
"1C"

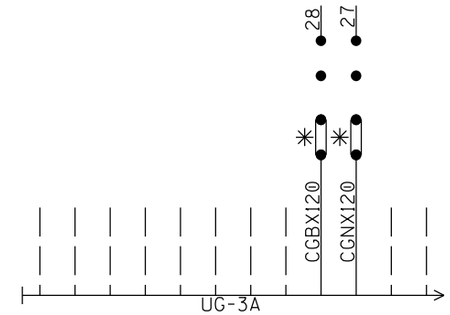

(SEE PREVIOUS SHEET FOR OTHER WIRES IN CABLE)

NOTE: ALL 120VAC AND ABOVE WILL BE WIRED TO THE REAR OF FARADAY BACKBOARD. INSULATED NUTS MUST BE USED ON ALL TERMINALS.

✳ = CLOSED DURING WINTER MONTHS

REAR BACKBOARD 1C

DESIGNED BY: WJK 10-23-15	NORFOLK SOUTHERN		
DRAWN BY: XRL 10-23-15	OFFICE OF ASS'T. VICE PRESIDENT COMM. & SIGNAL, ATLANTA, GA.	M.P.:	VC-5.11
CHECKED BY: PEH 10-29-15	BROOKLYN, IL FLGS AT SR-3 & ADAMS ST		
IN SERVICE: - -	VC BELT DISTRICT	FILE No.	R-
	CADD or DWG. No. XW0784P.22	SHEET No.	22 of 27

REVISION INITIALS											

PROPERTY
NORFOLK SOUTHERN RAILWAY CO.

NOTE: IF THE FARADAY SHIELD WOULD EVER NEED TO BE DRILLED IN THE FIELD, PROPER PRECAUTIONS MUST BE TAKEN TO INSURE METAL SHAVINGS DO NOT GET INTO EXISTING TERMINALS/WIRES.

AREA BELOW IS SCALED WITH AS=.75

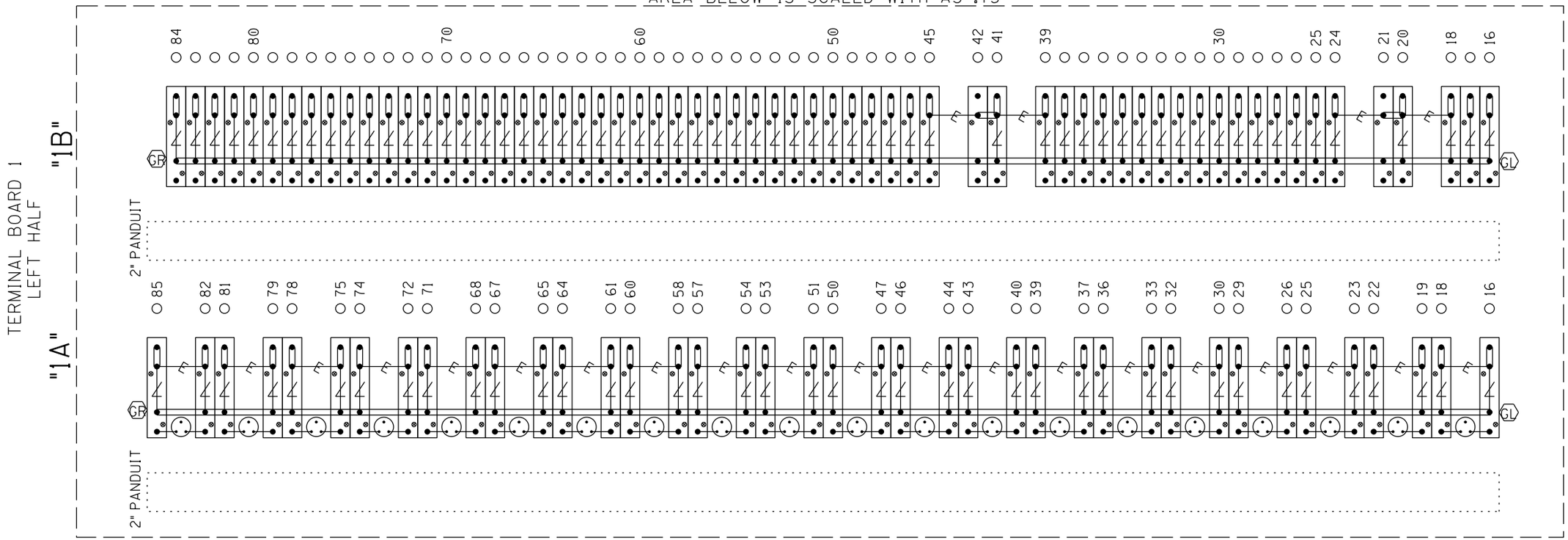

= Heavy Duty Equalizer (022700-1X)

Clearview = Lightning Arrester (022585-1X)

= LPC-10560-51

FARADAY SHIELD 1A & 1B

= INDICATES PLACEMENT OF PANDUIT

THIS SHEET IS FOR REFERENCE ONLY, TO REFLECT HOW THE FARADAY SHIELD IS PREDRILLED. ONLY INSTALL AND USE THE TERMINALS NEEDED.

GR / GL = TERMINALS GROUNDED TO SHIELD. 4 POST BLOCKS USE EITHER -
GR - SERMMI PART NO. 61278
GL - SERMMI PART NO. 61278-1.

DESIGNED BY:	WJK 10-23-15
DRAWN BY:	XRL 10-23-15
CHECKED BY:	PEH 10-29-15
IN SERVICE:	- -

NORFOLK SOUTHERN

OFFICE OF ASS'T. VICE PRESIDENT COMM. & SIGNAL, ATLANTA, GA. — M.P.: VC-5.11

BROOKLYN, IL
FLGS AT SR-3 & ADAMS ST

VC BELT DISTRICT — FILE No. R-

CADD or DWG. No. XW0784P.23 — SHEET No. 23 of 27

REVISION INITIALS

PROPERTY
NORFOLK SOUTHERN RAILWAY CO.

NOTE: IF THE FARADAY SHIELD WOULD EVER NEED TO BE DRILLED IN THE FIELD, PROPER PRECAUTIONS MUST BE TAKEN TO INSURE METAL SHAVINGS DO NOT GET INTO EXISTING TERMINALS/WIRES.

AREA BELOW IS SCALED WITH AS=.75

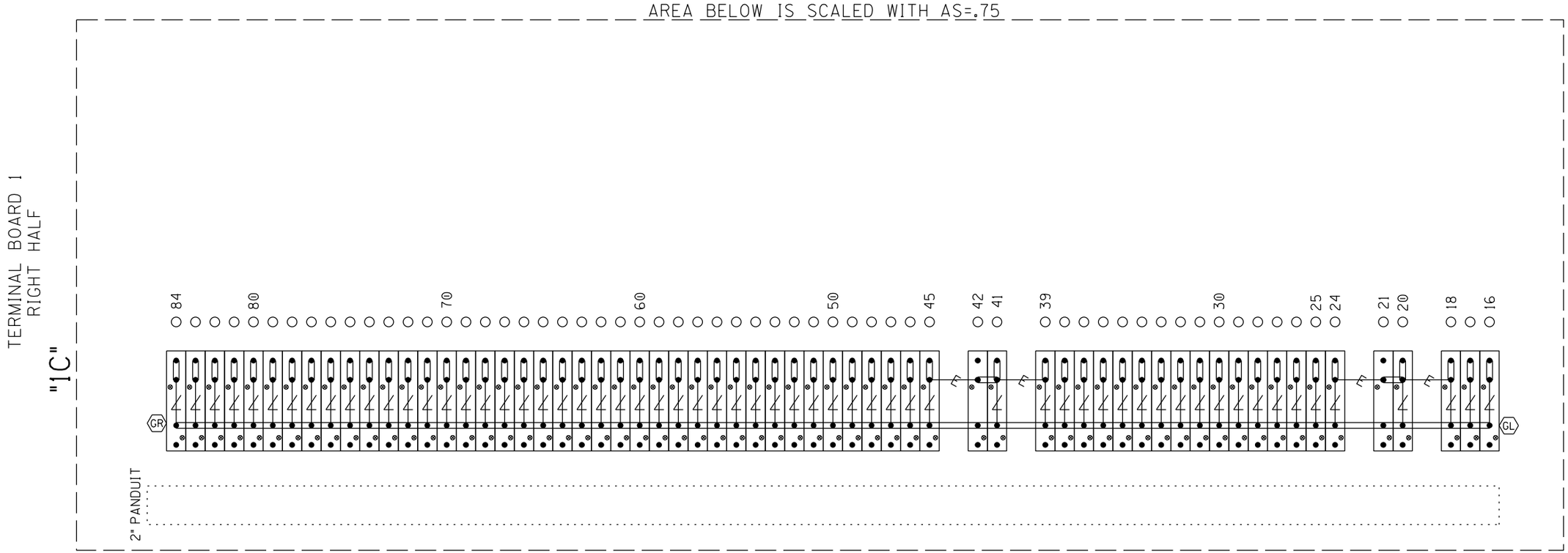

= Heavy Duty Equalizer (022700-1X)

Clearview = Lightning Arrester (022585-1X)

= LPC-10560-51

FARADAY SHIELD 1C

= INDICATES PLACEMENT OF PANDUIT

THIS SHEET IS FOR REFERENCE ONLY, TO REFLECT HOW THE FARADAY SHIELD IS PREDRILLED. ONLY INSTALL AND USE THE TERMINALS NEEDED.

GR / GL = TERMINALS GROUNDED TO SHIELD. 4 POST BLOCKS USE EITHER - GR - SERMMI PART NO. 61278 GL - SERMMI PART NO. 61278-1.

DESIGNED BY:	WJK 10-23-15
DRAWN BY:	XRL 10-23-15
CHECKED BY:	PEH 10-29-15
IN SERVICE:	- -

NORFOLK SOUTHERN

OFFICE OF ASS'T. VICE PRESIDENT COMM. & SIGNAL, ATLANTA, GA. M.P.: VC-5.11

BROOKLYN, IL
FLGS AT SR-3 & ADAMS ST

VC BELT DISTRICT FILE No. R-

CADD or DWG. No. XW0784P.24 SHEET No. 24 of 27

REVISION INITIALS

PROPERTY
NORFOLK SOUTHERN RAILWAY CO.

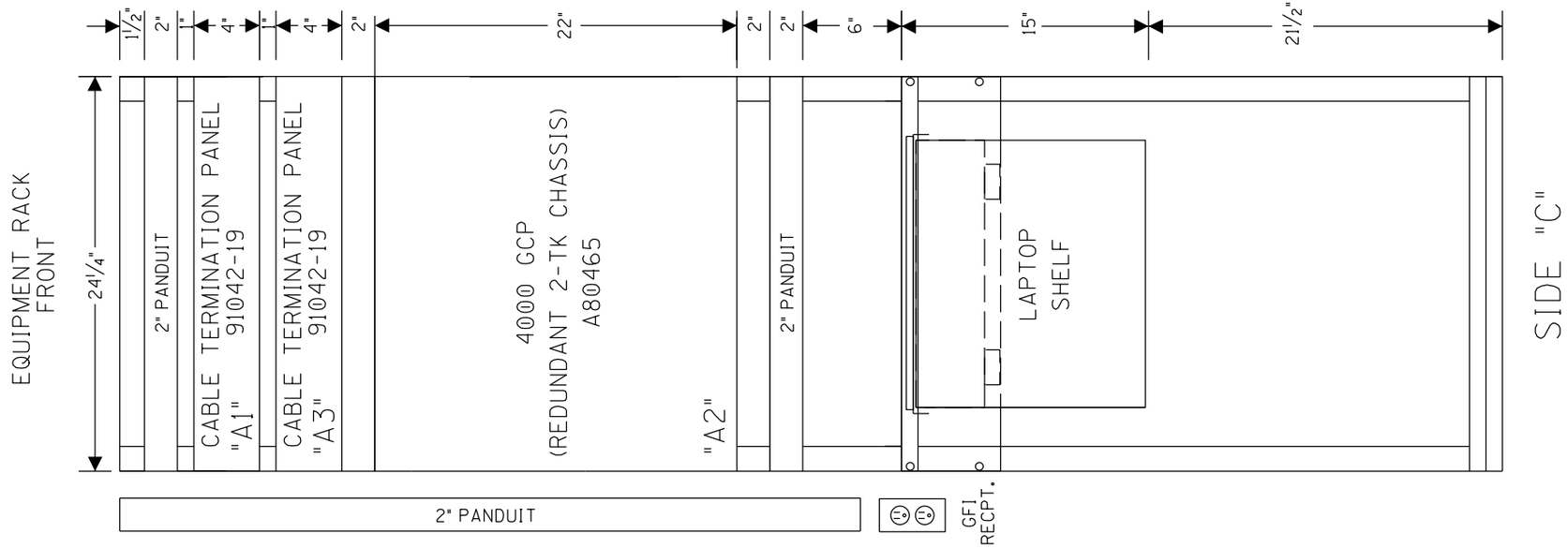

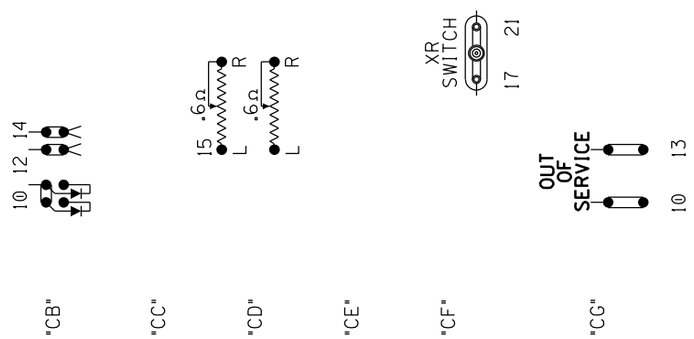

HOUSE SIDE C LAYOUT
& RACK PLACEMENT

DESIGNED BY: WJK 10-23-15	NORFOLK SOUTHERN		
DRAWN BY: XRL 10-23-15	OFFICE OF ASS'T. VICE PRESIDENT COMM. & SIGNAL, ATLANTA, GA.	M.P.:	VC-5.11
CHECKED BY: PEH 10-29-15	BROOKLYN, IL FLGS AT SR-3 & ADAMS ST		
IN SERVICE: - -	VC BELT DISTRICT	FILE No.	R-
	CADD or DWG. No. XW0784P.25	SHEET No.	25 of 27

REVISION INITIALS										

PROPERTY
NORFOLK SOUTHERN RAILWAY CO.

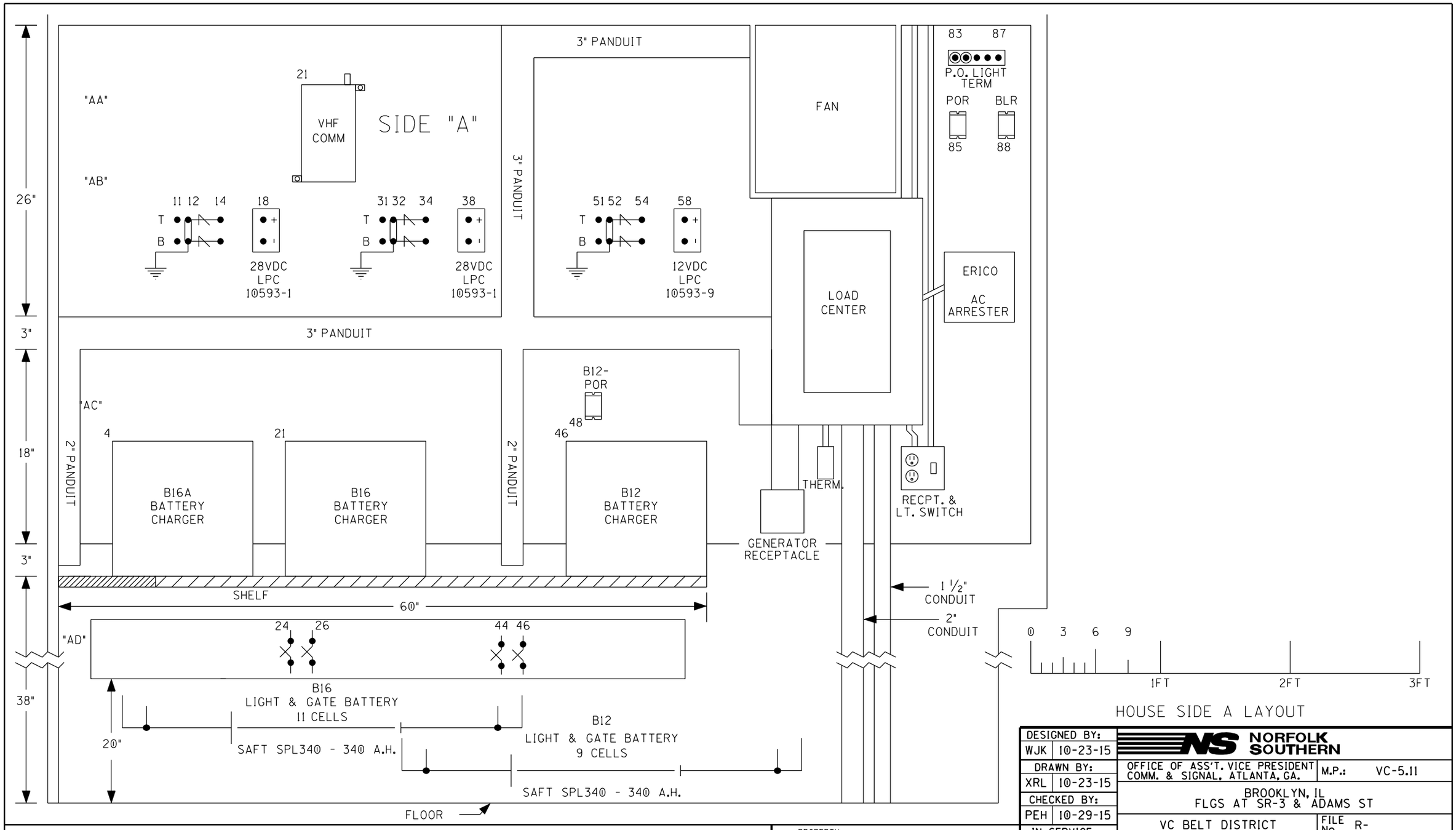

HOUSE SIDE A LAYOUT

DESIGNED BY: WJK 10-23-15	NORFOLK SOUTHERN		
DRAWN BY: XRL 10-23-15	OFFICE OF ASS'T. VICE PRESIDENT COMM. & SIGNAL, ATLANTA, GA.	M.P.:	VC-5.11
CHECKED BY: PEH 10-29-15	BROOKLYN, IL FLGS AT SR-3 & ADAMS ST		
IN SERVICE: - -	VC BELT DISTRICT	FILE No.	R-
	CADD or DWG. No. XW0784P.26	SHEET No.	26 of 27

REVISION INITIALS

PROPERTY
NORFOLK SOUTHERN RAILWAY CO.

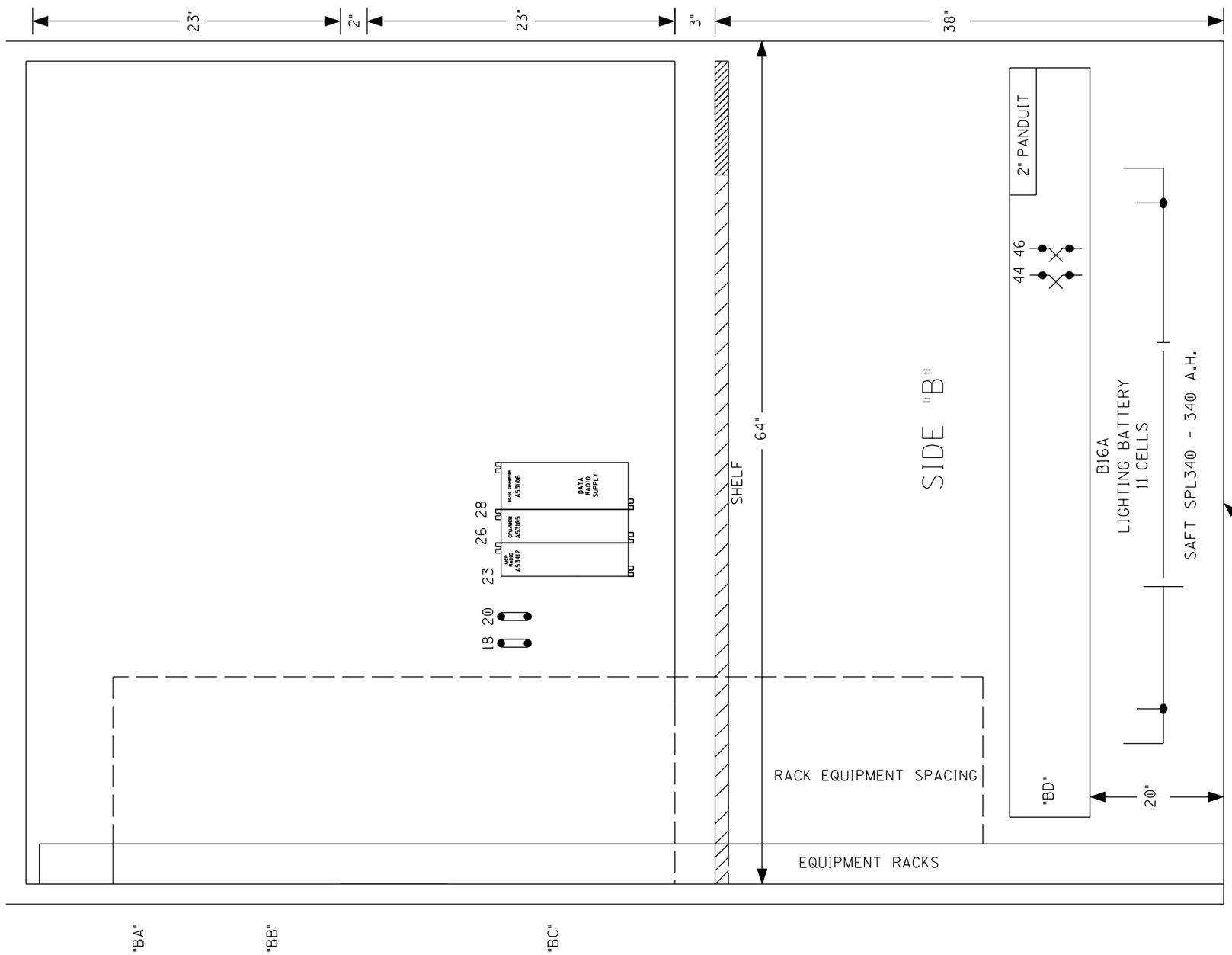

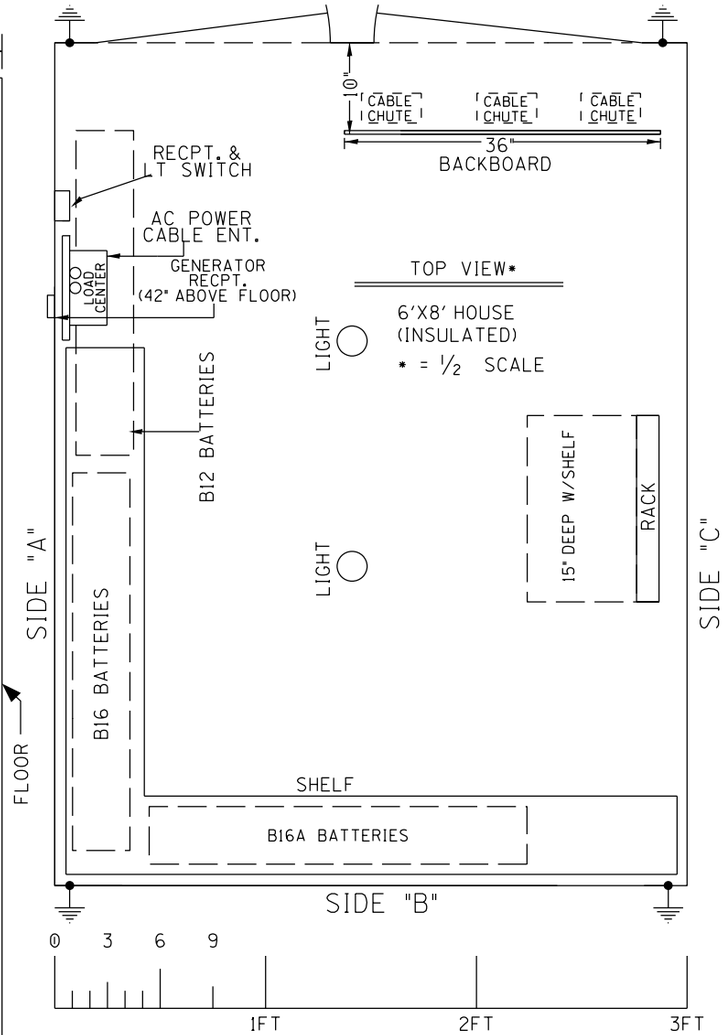

HOUSE SIDE B LAYOUT & TOP VIEW

DESIGNED BY: WJK 10-23-15	NORFOLK SOUTHERN	
DRAWN BY: XRL 10-23-15	OFFICE OF ASS'T. VICE PRESIDENT COMM. & SIGNAL, ATLANTA, GA.	M.P.: VC-5.11
CHECKED BY: PEH 10-29-15	BROOKLYN, IL FLGS AT SR-3 & ADAMS ST	
IN SERVICE: - -	VC BELT DISTRICT	FILE No. R-
	CADD or DWG. No. XW0784P.27	SHEET No. 27 of 27

REVISION INITIALS										

PROPERTY
NORFOLK SOUTHERN RAILWAY CO.