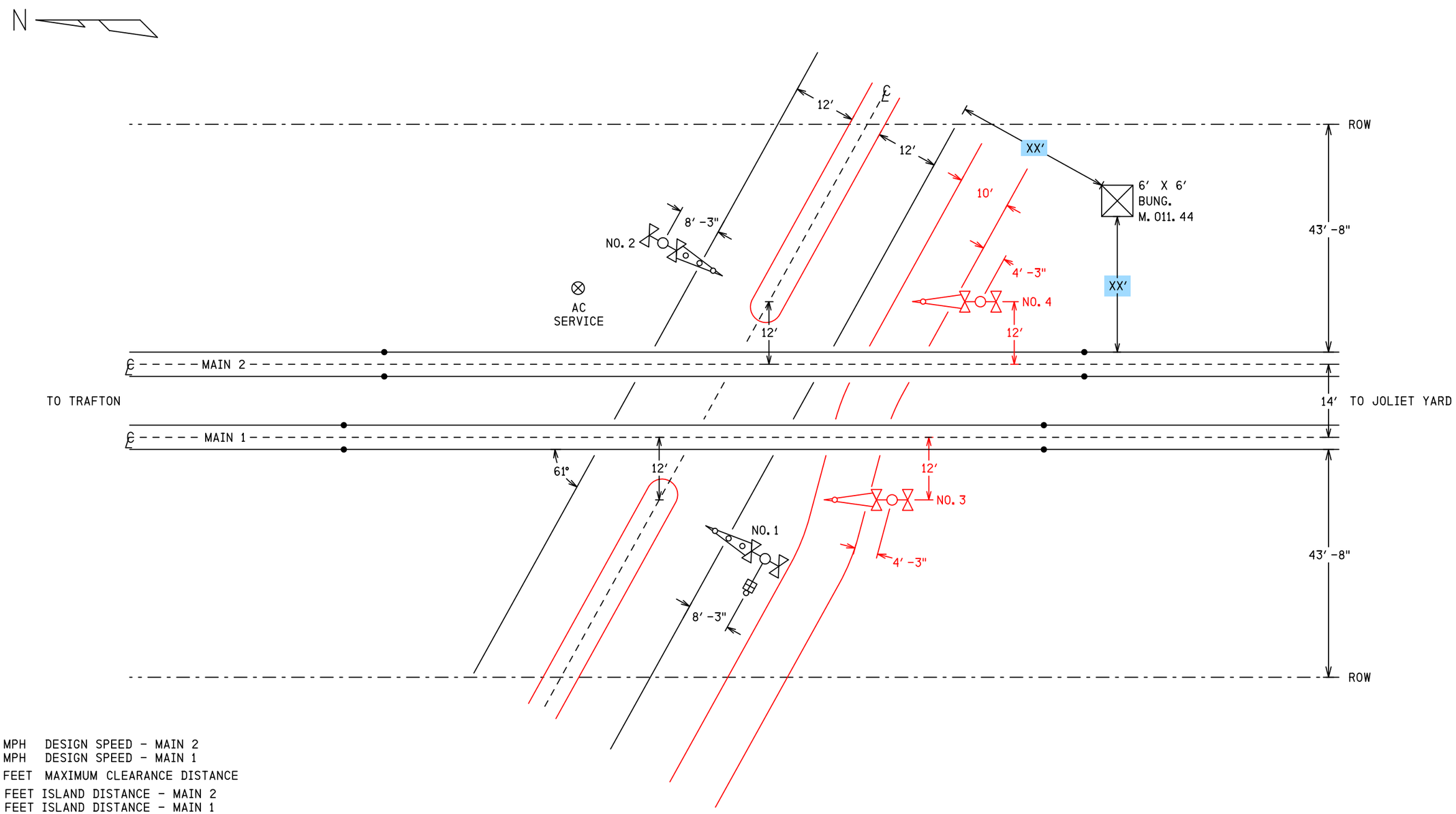


NOTES

1) 40 MPH DESIGN SPEED - MAIN 2
   10 MPH DESIGN SPEED - MAIN 1
2) 55 FEET MAXIMUM CLEARANCE DISTANCE
3) 135 FEET ISLAND DISTANCE - MAIN 2
   135 FEET ISLAND DISTANCE - MAIN 1
4) CONSTANT WARNING CONTROL
5) APPROACH CIRCUIT DISTANCE PROVIDES FOR:
   2 SEC CLEARANCE TIME
   0 SEC PREEMPTION TIME (0 SEC ADVANCE TIME)
   22 SEC MINIMUM WARNING TIME
   4 SEC GATE DESCENT DELAY
   10 SEC BUFFER TIME
   5 SEC EQUIPMENT REACTION TIME
6) 20 FEET NO. 1 GATE ARM LENGTH
   20 FEET NO. 2 GATE ARM LENGTH
7) 13 FEET NO. 3 GATE ARM LENGTH
   12 FEET NO. 4 GATE ARM LENGTH

TO BE CONFIRMED

CONFIRMED
DATE _____
BY _____
(PRINT NAME)

SII 16 JAN 2016
PROPOSED
DESIGN NO. 15-0094
RED-IN YELLOW-OUT

AS INSTALLED
DATE _____
BY _____
(PRINT NAME)

| PROPOSED D | M | Y | REVISIONS | D | C | COMPLETED D | M | Y | C |
|---|---|---|---|---|---|---|---|---|---|
| | | | PLAN REDRAWN | | | 18 | 03 | 15 | SII |
| 16 | 01 | 16 | ADD PED GATES | APL | MRB | | | | |

REGION SOUTHERN
SUB. LEITHTON 332
CN
SIGNALS AND COMMUNICATIONS HOMEWOOD
DES.
CH.
SITUATION SKETCH
SCALE 1" = 20′
PLAINFIELD, IL
135TH ST
LEI-011. 44-0
DOT#260 575M
14

lei-011. 44-0. dgn
17-FEB-2016

SIEMENS INDUSTRY INC
LOUISVILLE DIVISION, LOUISVILLE, KY

| REVISIONS | | | | |
|---|---|---|---|---|
| NO. | DATE | BY | DESCRIPTION | APP. BY |
| 1 | | | | |
| 2 | | | | |
| 3 | | | | |
| 4 | | | | |
| 5 | | | | |

FLASHING LIGHT UNITS ALIGNMENT TABLE

| PRIMARY FRONT LIGHTS FOR VEHICLES | | | | | | | |
|---|---|---|---|---|---|---|---|
| SIG # | LIGHT # | ROUNDEL | | ROAD SPEED | MINIMUM DISTANCE | RECOMMENDED DISTANCE | ALIGNMENT DISTANCE |
| | | SIZE | TYPE | MPH | FT | FT | FT |
| 1 | 1,2 | 12" | LED | 35 | 325 | 550 | |
| 2 | 7,8 | 12" | LED | 35 | 325 | 550 | |
| BACK LIGHTS FOR VEHICLES | | | | | | | |
| SIG # | LIGHT # | ROUNDEL | | ROAD SPEED | MINIMUM DISTANCE | RECOMMENDED DISTANCE | ALIGNMENT DISTANCE |
| | | SIZE | TYPE | MPH | FT | FT | FT |
| 1 | 3,4 | 12" | LED | N/A | N/A | N/A | 50 |
| 2 | 5,6 | 12" | LED | N/A | N/A | N/A | 50 |
| FRONT LIGHTS FOR SIDEWALKS, TRAILS OR PATHS | | | | | | | |
| 3 | 15,16 | 12" | LED | N/A | N/A | N/A | 100 |
| 3 | 17,18 | 12" | LED | N/A | N/A | N/A | 100 |
| 4 | 19,20 | 12" | LED | N/A | N/A | N/A | 100 |
| 4 | 21,22 | 12" | LED | N/A | N/A | N/A | 100 |

NOTE
FIELD IS TO PROVIDE THE ACTUAL ALIGNMENT DISTANCE AS DETERMINED BY
SCP-706: ROAD CROSSING DEVICE LIGHT UNIT ALIGNMENT PROCEDURES

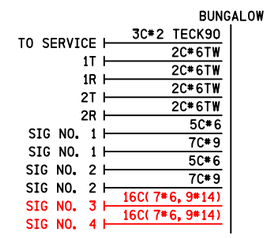


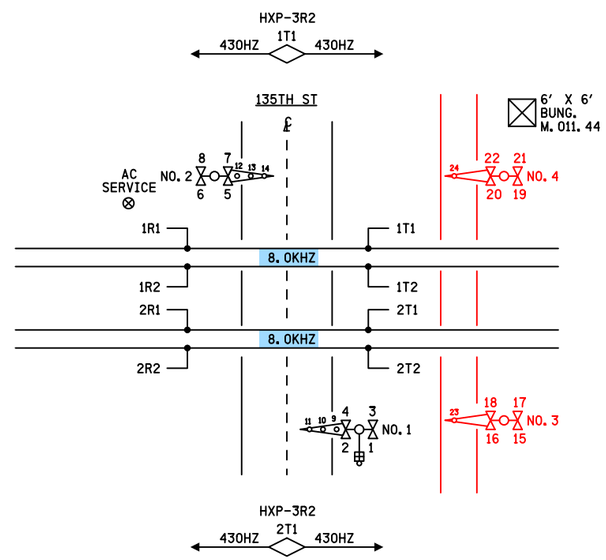


| CONTENT | SHEET NO. | |
|---|---|---|
| SITUATION SKETCH | 0 | |
| TRACK LAYOUT & INDEX | 01 | |
| HXP-3R2 WIRING | 02 | |
| HXP SETUP SHEET | 03 | |
| SSCCIV WITH ISOLATED GATE CROSSING CONTROLLER 40AMP | 04 | |
| CROSSING CONTROLLER & ARRESTOR WIRING | 04X | |
| SSCCIV PROGRAM DATA | 05 | |
| GATE 1&2 MECH. CONTROL CIRCUITS | 06 | 05 |
| GATE 3 &4 MECH. CONTROL CIRCUITS SAFETRAN S-60 | 07 | |
| BATTERY BUS & RECTIFER WIRING | 08 | 06 |
| HIGHWAY CROSSING ANALYZER & LOD WIRING | 08A | 07 |
| RTU UNIT & WIRING | 08B | 07A |
| SAFETRAN EVENT ANALYZER RECORDER II (SEAR II) | 09 | |
| SEARII PROGRAM DATA | 10 | |
| EQUIPMENT RACK LAYOUT DETAIL | 11 | 08 |
| AC POWER DISTRIBUTION | 12 | 09 |
| HOUSE LAYOUT | 13 | 10 |

PHASE 1: INSTALL SEARII
PHASE 2: REMOVE HCA & CRTU

lei-011.44-01.dgn
17-FEB-2016

DENOTES PROPOSAL 16-0003
REVISION 17/01/16

TO BE CONFIRMED

CONFIRMED
DATE _____
BY _____
(PRINT NAME)

SII 17 JAN 2016
PROPOSED
DESIGN NO. 16-0003
RED-IN YELLOW-OUT
AS INSTALLED
DATE _____
BY _____
(PRINT NAME)

SII 16 JAN 2016
PROPOSED
DESIGN NO. 15-0094
RED-IN YELLOW-OUT
AS INSTALLED
DATE _____
BY _____
(PRINT NAME)

| PROPOSED D | PROPOSED M | PROPOSED Y | REVISIONS | D | C | COMPLETED D | COMPLETED M | COMPLETED Y | C |
|---|---|---|---|---|---|---|---|---|---|
| | | | PLAN REDRAWN | | | 16 | 01 | 16 | NAD |
| 16 | 01 | 16 | ADD PED GATES | NAD | BJW | | | | |
| 17 | 01 | 16 | SEAR/RAILFUSION | NAD | BJW | | | | |

REGION SOUTHERN
SUB. LEITHTON 332
SIGNALS AND COMMUNICATIONS HOMEWOOD
10 JULY 2001
DES. BJH
CH. JJ
TRACK LAYOUT & INDEX
PLAINFIELD, IL
135TH ST
LEI-011.44-01
DOT#260 575M

SIEMENS INDUSTRY INC
DES.: NAD | DATE: 16/01/16 | JOB NO.: PICA10763
CKD.: BJW | ISSUE DATE: N/A | EST. NO.: XP-8047
DRN.: NAD | PLAN NO.: N/A | SHEET 1 OF 15
P TIME: 15:35 | P DATE: 17-FEB-2016 | CAD ID.: LEI-011.44-01

SIEMENS INDUSTRY INC
LOUISVILLE DIVISION, LOUISVILLE, KY

| REVISIONS | | | | |
|---|---|---|---|---|
| NO. | DATE | BY | DESCRIPTION | APP. BY |
| 1 | | | | |
| 2 | | | | |
| 3 | | | | |
| 4 | | | | |
| 5 | | | | |

lei-011.44-02.dgn
17-FEB-2016

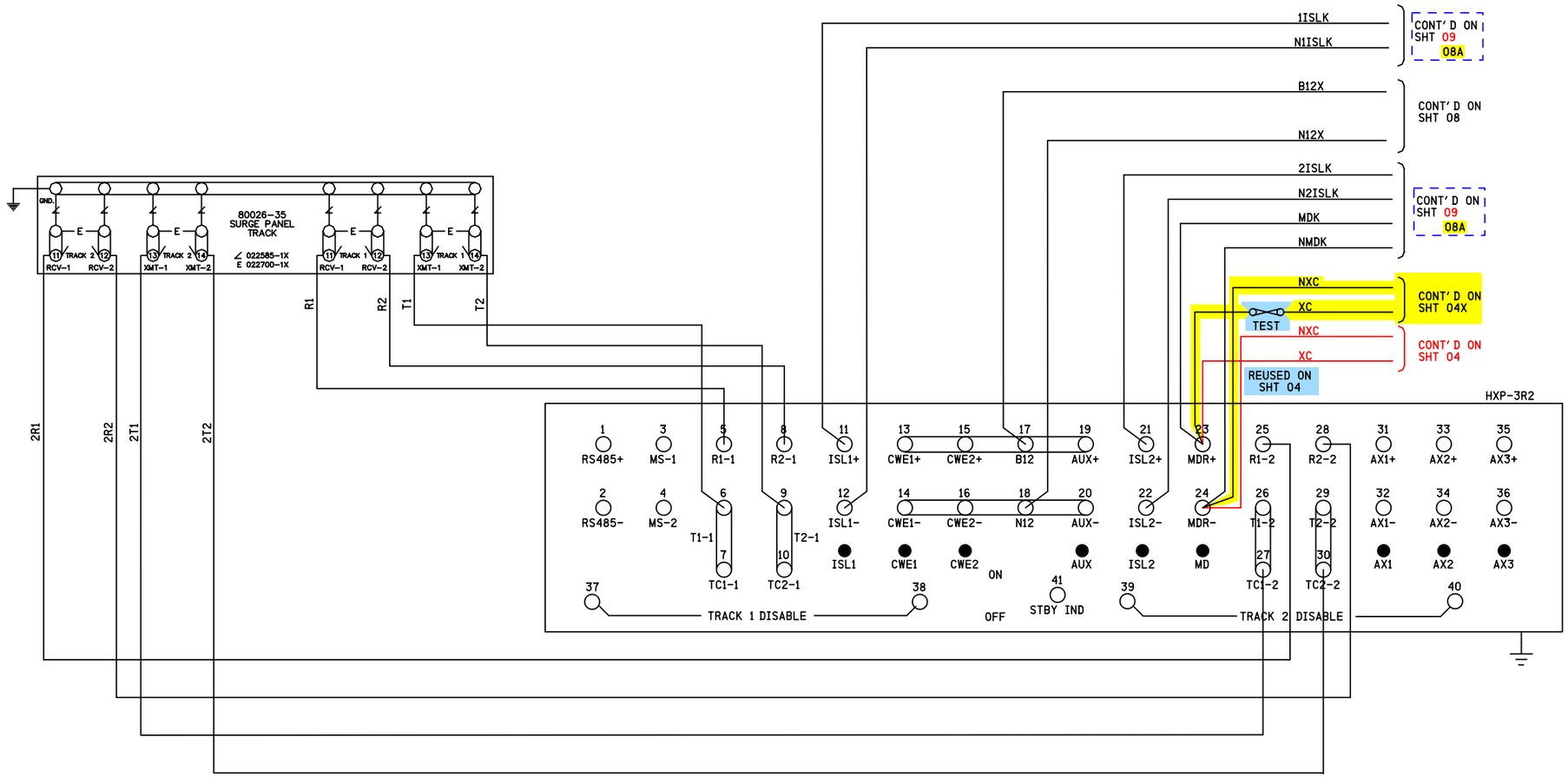


DENOTES PROPOSAL 16-0003
REVISION 17/01/16

SII 17 JAN 2016

PROPOSED
DESIGN NO. 16-0003
RED-IN YELLOW-OUT

AS INSTALLED
DATE _____
BY _____
(PRINT NAME)

SII 16 JAN 2016

PROPOSED
DESIGN NO. 15-0094
RED-IN YELLOW-OUT

AS INSTALLED
DATE _____
BY _____
(PRINT NAME)

| PROPOSED D | PROPOSED M | PROPOSED Y | REVISIONS | D | C | COMPLETED D | COMPLETED M | COMPLETED Y | C |
|---|---|---|---|---|---|---|---|---|---|
| | | | PLAN REDRAWN | | | 16 | 01 | 16 | NAD |
| 16 | 01 | 16 | ADD PED GATES | NAD | BJW | | | | |
| 17 | 01 | 16 | SEAR/RAILFUSION | NAD | BJW | | | | |

REGION SOUTHERN
SUB. LEITHTON 332

SIGNALS AND COMMUNICATIONS HOMEWOOD
10 JULY 2001
DES. BJH
CH. JJ

HXP-3R2 WIRING

PLAINFIELD, IL
135TH ST

LEI-011.44-02

DOT#260 575M

SIEMENS INDUSTRY INC

| | | | |
|---|---|---|---|
| DES. : NAD | DATE: 16/01/16 | JOB NO. : PICA10763 | |
| CKD. : BJW | ISSUE DATE: N/A | EST. NO. : XP-8047 | |
| DRN. : NAD | PLAN NO. : N/A | SHEET 2 OF 15 | |
| P. TIME: 15:35 | P. DATE: 17-FEB-2016 | CAD ID. : LEI-011.44-02 | |

SIEMENS INDUSTRY INC
LOUISVILLE DIVISION, LOUISVILLE, KY

| REVISIONS | | | |
|---|---|---|---|
| NO. | DATE | BY | DESCRIPTION | APP. BY |
| 1 | | | | |
| 2 | | | | |
| 3 | | | | |
| 4 | | | | |
| 5 | | | | |

Grade Crossing Location Record

Cabinet Number (Option 90) 5062

Location 135TH STREET  Milepost 11.44 WSD  DOT 260 575M  Date 02 / 02 / 08

Operating Program  HPN _____  Version 41.0

System Monitor Program  HPN _____  Version 20.2

Hardware Settings

Track 1  Master [X]  Slave [ ]  4 kHz [ ]  8 kHz [X]

LOS Jumper 0 [ ] 1 [X] 2 [ ]  Fault Jumper 0 [ ] 1 [X]

Approach configuration switch position:  Normal [X]  Short [ ]  Very Short [ ]

Track 2  Master [ ]  Slave [X]  4 kHz [ ]  8 kHz [X]

LOS Jumper 0 [ ] 1 [X] 2 [ ]  Fault Jumper 0 [ ] 1 [X]

Approach configuration switch position:  Normal [ ]  Short [ ]  Very Short [X]

Adjust Select Adjustments

| No. | Adjustment | Default | Range | Track 1 | Track 2 |
|---|---|---|---|---|---|
| 1 | Approach Length | 9,999 | 0 - 9,999 | 2180 2169 feet | 550 500 feet |
| 2 | Warning Time | 99 | 23 - 99 | 32 25 seconds | 32 25 seconds |
| 3 | LIA | 0 | -9 to +9 | 0 steps | 0 steps |
| 4 | TC (1 step = 32) | 0 | 430 - 470 | 0 steps | 7 steps |
| 5 | MD Restart | 99% | 0 - 99% | 0 RX | 0 RX |

Option Adjustments

| No. | Adjustment | Default | Range | Track 1 | Track 2 |
|---|---|---|---|---|---|
| 1 | TK-ENA | UP | UP or dn | UP [X] dn [ ] | UP [X] dn [ ] |
| 2 | TK FO | 0 | 0 - 9999 | 430 Hz | 430 Hz |
| 3 | CW/MD | d | C to d | C [X] d [ ] | C [ ] d [X] |
| 4 | UNI-BI | b | U - b | U [ ] b [X] | U [ ] b [X] |
| 5 | NBS-C | 0 | 0 - 99 | 93 | 100 RX |
| | | 9,999 | RX dependant | 2332 | 500 feet |
| 6 | CWEWT | 80 | 0 - 99 | 80 | 80 seconds |
| 7 | LOS | 16 | 4 - 99 | 16 | 16 seconds |
| 8 | IJ-LOS | 5 | 3 - 99 | 5 | 5 seconds |
| 9 | BC | frequency dependant | 50 -250 | 135 | 145 |
| 10 | P-COMP | 0 | 0 - 10 | 0 | 0 degrees |

HXP-3, HXP-3R, HXP-3R2

AX Adjustment Options  NOTE: NO AX DRIVES ARE USED AT THIS LOCATION

| | Default | Range | Option 11 - AX1 | Option 12 - AX2 | Option 13 - AX3 |
|---|---|---|---|---|---|
| TK-ASN | | 1, 2, Both | 1 [ ] 2 [ ] Both [ ] | 1 [ ] 2 [ ] Both [ ] | 1 [ ] 2 [ ] Both [ ] |
| OF-TK1 | 0 | 0 - 9,999 | feet | feet | feet |
| OF-TK2 | 0 | 0 - 9,999 | feet | feet | feet |
| WT | 99 | 23 - 99 | seconds | seconds | seconds |
| MD-RST | 99 | 0 - 99% | RX | RX | RX |
| CW/MD | d | C or d | C [ ] d [ ] | C [ ] d [ ] | C [ ] d [ ] |
| CJ-LOS | 0 | 3 - 99 | seconds | seconds | seconds |
| PJ-DET | 15 | 4 - 15 | seconds | seconds | seconds |
| PJ-RX | 15 | 4 - 15 | RX | RX | RX |
| POS-ST | dn | UP or dn | UP [ ] dn [ ] | UP [ ] dn [ ] | UP [ ] dn [ ] |

| No. | Adjustment | Default | Range | Track 1 | Track 2 |
|---|---|---|---|---|---|
| 17 | MDR-AX | n* | n or A | n [X] A [ ] | n [X] A [ ] |
| | OF-TK1 | 0 | 0 - 9,999 | feet | |
| | OF-TK2 | 0 | 0 - 9,999 | | feet |
| | CJ-LOS | 0 | 3 - 99 | seconds | seconds |
| | PJ-DET | 15 | 4 - 15 | seconds | seconds |
| 18 | MD-TMR | 10 | 10-99 (0=disable) | 10 minutes | 10 minutes |
| 19 | MIN-WT | 0 | 23-99 (0=disable) | 0 seconds | 0 seconds |
| 20 | FS-DET | 0 | 10-30 (0=disable) | 0 minutes | 0 minutes |
| 21 | POS-RX | 0 | 0 - 74 (0=disable) | 0 RX | 0 RX |
| | POS-TM | 0 | 0 - 99** | 0 minutes | 0 minutes |
| 47 | ATO-RX | dn | UP or dn | UP [ ] dn [X] | UP [ ] dn [X] |
| 48 | PF-ENA | UP | UP or dn | UP [X] dn [ ] | UP [X] dn [ ] |

*n = not an AX drive (no options available)
**0 = disable, 99 = continuous

Shunt Record

| West Approach | | No Shunt RX | No Shunt Phase | 100% Shunt RX | 100% Shunt Phase | 50% Shunt | 50% Shunt RX | 50% Shunt Phase | LIA Added *1 to 9 |
|---|---|---|---|---|---|---|---|---|---|
| Track 1 | Normal | | | | | | | | |
| | Standby | | | | | | | | |
| Track 2 | Normal | | | | | | | | |
| | Standby | | | | | | | | |
| East Approach | | | | | | | | | |
| Track 1 | Normal | | | | | | | | |
| | Standby | | | | | | | | |
| Track 2 | Normal | | | | | | | | |
| | Standby | | | | | | | | |

SII 16 JAN 2016

PROPOSED
DESIGN NO. 15-0094
RED-IN YELLOW-OUT

AS INSTALLED
DATE _____
BY _____
(PRINT NAME)

| REVISIONS | PROPOSED D | PROPOSED M | PROPOSED Y | D | C | COMPLETED D | COMPLETED M | COMPLETED Y | C |
|---|---|---|---|---|---|---|---|---|---|
| PLAN REDRAWN | | | | | | 16 | 01 | 16 | NAD |
| ADD PED GATES | 16 | 01 | 16 | NAD | BJW | | | | |

REGION SOUTHERN
SUB. LEITHTON 332

SIGNALS AND COMMUNICATIONS HOMEWOOD
10 JULY 2001
DES. BJH
CH. JJ

HXP SETUP SHEET

PLAINFIELD, IL
135TH ST

LEI-011.44-03

DOT#260 575M

lei-011.44-03.dgn
17-FEB-2016

SIEMENS INDUSTRY INC

| | | | |
|---|---|---|---|
| DES.: NAD | DATE: 16/01/16 | JOB NO.: PICA10763 | |
| CKD.: BJW | ISSUE DATE: N/A | EST. NO.: XP-8047 | |
| DRN.: NAD | PLAN NO.: N/A | SHEET 3 OF 15 | |
| P. TIME: 15:35 | P. DATE: 17-FEB-2016 | CAD ID.: LEI-011.44-03 | |

SIEMENS INDUSTRY INC
LOUISVILLE DIVISION, LOUISVILLE, KY

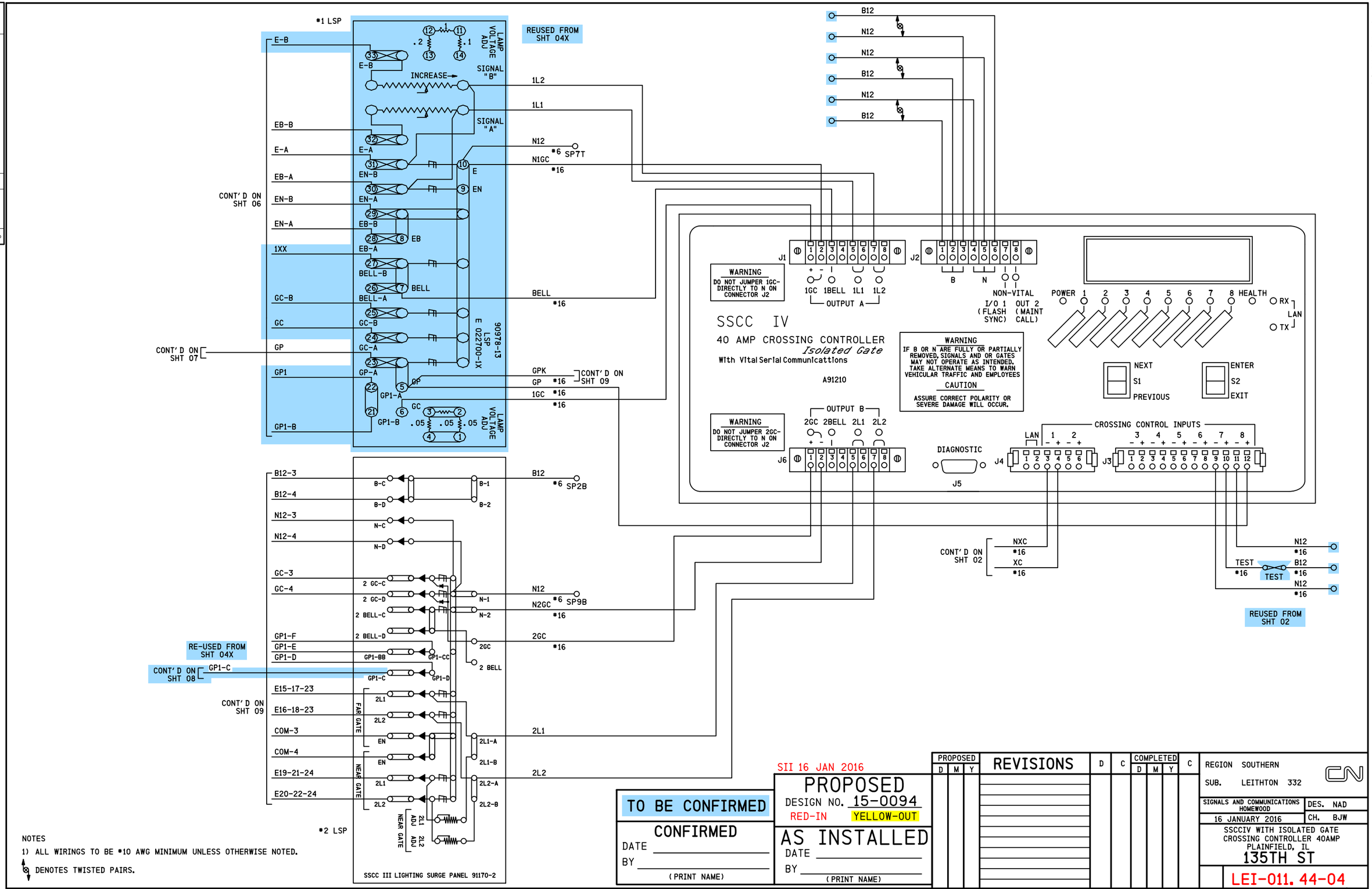


lei-011.44-04.dgn
17-FEB-2016

NOTES

1) ALL WIRINGS TO be *10 AWG MINIMUM UNLESS OTHERWISE NOTED.

DENOTES TWISTED PAIRS.

TO BE CONFIRMED

CONFIRMED

DATE _____

BY _____

(PRINT NAME)

SII 16 JAN 2016

PROPOSED

DESIGN NO. 15-0094

RED-IN YELLOW-OUT

AS INSTALLED

DATE _____

BY _____

(PRINT NAME)

| PROPOSED | | | REVISIONS | D | C | COMPLETED | | | C |
|---|---|---|---|---|---|---|---|---|---|
| D | M | Y | | | | D | M | Y | |

REGION SOUTHERN

SUB. LEITHTON 332

SIGNALS AND COMMUNICATIONS HOMEWOOD

DES. NAD

16 JANUARY 2016

CH. BJW

SSCCIV WITH ISOLATED GATE CROSSING CONTROLLER 40AMP PLAINFIELD, IL

135TH ST

LEI-011.44-04

DOT#260 575M

SIEMENS INDUSTRY INC

| | | | |
|---|---|---|---|
| DES. : NAD | DATE: 16/01/16 | JOB NO. : PICA10763 | |
| CKD. : BJW | ISSUE DATE: N/A | EST. NO. :XP-8047 | |
| DRN. : NAD | PLAN NO. :N/A | SHEET 4 OF 15 | |
| P. TIME:15:35 | P. DATE: 17-FEB-2016 | CAD ID. : LEI-011.44-04 | |

| NO. | DATE | BY | DESCRIPTION | APP. BY |
|---|---|---|---|---|
| 1 | | | | |
| 2 | | | | |
| 3 | | | | |
| 4 | | | | |
| 5 | | | | |

REVISIONS

SIEMENS INDUSTRY INC
LOUISVILLE DIVISION, LOUISVILLE, KY

| REVISIONS | | | | |
|---|---|---|---|---|
| NO. | DATE | BY | DESCRIPTION | APP. BY |
| 1 | | | | |
| 2 | | | | |
| 3 | | | | |
| 4 | | | | |
| 5 | | | | |

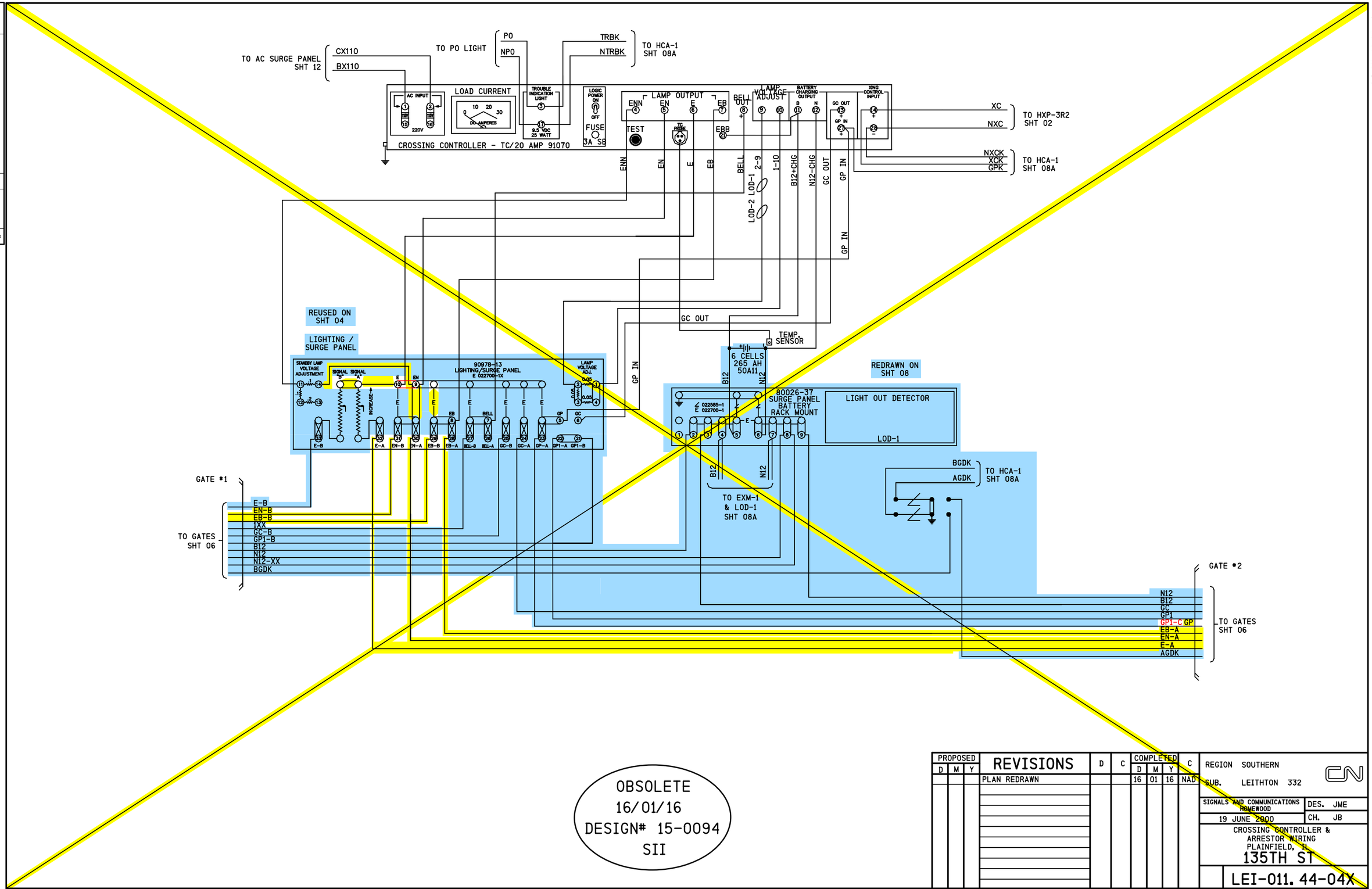


OBSOLETE
16/01/16
DESIGN# 15-0094
SII

| PROPOSED D | PROPOSED M | PROPOSED Y | REVISIONS | D | C | COMPLETED D | COMPLETED M | COMPLETED Y | C |
|---|---|---|---|---|---|---|---|---|---|
| | | | PLAN REDRAWN | | | 16 | 01 | 16 | NAD |

REGION SOUTHERN
SUB. LEITHTON 332

SIGNALS AND COMMUNICATIONS HOMEWOOD
19 JUNE 2000
DES. JME
CH. JB

CROSSING CONTROLLER & ARRESTOR WIRING
PLAINFIELD, IL
135TH ST

LEI-011.44-04X

DOT#260 575M

lei-011.44-04x.dgn
17-FEB-2016

| SIEMENS INDUSTRY INC | | | |
|---|---|---|---|
| DES.: N/A | DATE: N/A | JOB NO.: N/A | |
| CKD.: N/A | ISSUE DATE: N/A | EST. NO.: N/A | |
| DRN.: N/A | PLAN NO.: N/A | SHEET N/A OF N/A | |
| P TIME: 15:35 | P DATE: 17-FEB-2016 | CAD ID.: N/A | |

SIEMENS INDUSTRY INC
LOUISVILLE DIVISION, LOUISVILLE, KY

CROSSING CONTROLLER SSCCIV 40-AMPERE UNIT, A91210

SOFTWARE VERSION: 9V546-A01.R

| PROGRAM | NOTES | INITIAL SETTING BY: _____ DATE: __/__/____ |
|---|---|---|
| FLASH RATE: | 30-70 FLASHES/MINUTE DEFAULT = 50 | 55 FLASHES/MINUTE |
| GATES USED: | YES/NO DEFAULT = YES | ■ YES ☐ NO |
| 1 GC DELAY: | 3-20 SEC. DEFAULT = 4 | 4 SECONDS |
| 2 GC DELAY (40 AMP UNIT): | 3-20 SEC. DEFAULT = 4 | 4 SECONDS |
| GATE RISING BELL: | ON/OFF DEFAULT = ON | ☐ ON ■ OFF |
| ENABLED INPUTS: | 1 THRU 7 ONLY | ■ 1 ☐ 2 ☐ 3 ☐ 4 ☐ 5 ☐ 6 ■ 7 |
| GC2/I7: | GC2 NORMAL, I7 = NORMAL<br>GC2 INVERTED, I7 = NORMAL<br>GC2 PRMT RELAY, I7 = PRMT<br>HEALTH GC2 BEACONFDBK | ■ NORMAL ☐ INVERTED<br>☐ PRE-EMPT SIM ☐ PRE-EMPT ADV<br>☐ BEACON |
| INPUT 7 | INPUT, PRMT HLTH, TEST SW | ☐ IN ☐ HEALTH ■ TEST SW |
| TEST SW 2TRKDSTK ONLY | ACTIVATE, ACT & STICK RELEASE | ☐ ACTIVATE ☐ ACT & REL |
| ADV PRE-EMPT TIME (40A): | 1-99 SEC. DEFAULT = 1 | N/A SECONDS |
| MIN ACTIVATION TIME: | 0-99 SEC. DEFAULT = 20 | 22 SECONDS |
| STICK RELEASE TIME: | 5-120 MIN. DEFAULT = 15 | N/A MINUTES |
| BEACON PICK-UP DELAY | 5-600 SEC. DEFAULT = 20 | N/A SECONDS |
| SUP ISLAND TIME: | 5-20 MIN. DEFAULT = 20 | N/A MINUTES |
| ENABLED OUTPUTS: (40 amp only) | DEFAULT = A + B | ■ A + B ☐ A ☐ B |
| DAYLIGHT SAVINGS: | DEFAULT = DISABLED | ■ ENABLED ☐ DISABLED |
| DATE: | N/A | ☐ DATE SET |
| TIME: | 24-FORMAT | ☐ TIME SET |
| PASSWORD: | DEFAULT = DISABLED | ☐ ENABLED ■ DISABLED |

| CONFIGURE | | |
|---|---|---|
| LOS TIMERS: | 0-20 SEC. DEFAULT = 0<br>INPUTS 1-7 ONLY | 1: 0 SEC 5: 0 SEC<br>2: 0 SEC 6: 0 SEC<br>3: 0 SEC 7: 0 SEC<br>4: 0 SEC |
| MCF: | | MCF: BASICPLS<br>CRC: 09658133 |
| ATCS ADDRESS: | DEFAULT = 700000000000 | _____ |
| LOW BATTERY: | 9.0-15.0 VOLTS, OR DISABLED<br>DEFAULT = DISABLED | ■ DISABLED<br>☐ ENABLED ___.___ VOLTS |
| AUX I/O: | DEFAULT = NONVITAL OUTPUT | ■ NV OUTPUT ☐ FLASH SYNC IN<br>☐ FLASH SYNC OUT |
| DETECT LAMP NEUTRAL WIRE | DEFAULT = YES | ☐ YES ■ NO |

| TEST CONFIGURE | | |
|---|---|---|
| LAMP TEST CANCEL TIMER: | 1-15 MIN. DEFAULT = 5 | 5 MINUTES |
| LAMP TEST DELAY TIMER: | 30-120 SEC. DEFAULT = 30 | 30 SECONDS |
| LAMP TEST ON TIMER: | 15-60 SEC. DEFAULT = 15 | 15 SECONDS |

STANDARD SETUP LAMP VOLTAGES PROCEDURE
USING TRUE RMS AC+DC METER, OR CONVERSION TABLE BELOW

| SETUP LAMP VOLTAGES | INITIAL SETTING BY: _____<br>DATE: __/__/____<br>METER: FLUKE 87 |
|---|---|
| FAR SIGNAL | 1 L1 = ___.___ VOLTS<br>1 L2 = ___.___ VOLTS<br>2 L1 = ___.___ VOLTS<br>2 L2 = ___.___ VOLTS |
| SSCCIV | 1 L1 = ___.___ VOLTS<br>1 L2 = ___.___ VOLTS<br>2 L1 = ___.___ VOLTS<br>2 L2 = ___.___ VOLTS |
| NEAR SIGNAL | 1 L1 = ___.___ VOLTS<br>1 L2 = ___.___ VOLTS<br>2 L1 = ___.___ VOLTS<br>2 L2 = ___.___ VOLTS |

MULTIMETER READING VARIANCE FROM ACTUAL LAMP VOLTAGE

| BATTERY BANK VOLTAGE | VALID LAMP OUTPUT RANGE (In volts) | DIGITAL METER (FLUKE 87 OR EQUIVALENT) | ANALOG METER (SIMPSON 260 OR TS111) |
|---|---|---|---|
| 13.3 | 9.0 TO 12.0 | 1.3 VOLTS BELOW ACTUAL VALUE | 0.6 VOLTS BELOW ACTUAL VALUE |
| 14.7 | 9.0 TO 12.0 | 2.2 VOLTS BELOW ACTUAL VALUE | 1.1 VOLTS BELOW ACTUAL VALUE |
| 15.8 | 9.0 TO 12.0 | 2.6 VOLTS BELOW ACTUAL VALUE | 2.0 VOLTS BELOW ACTUAL VALUE |

FOR LAMP OUTPUT SETTINGS GREATER THAN 12.0 VOLTS, REDUCE THE LISTED VALUES BY 30%
LAMP VOLTAGE MEASUREMENTS SHOULD BE ACCURATE TO 0.3 VOLTS.

REVISIONS

| NO. | DATE | BY | DESCRIPTION | APP. BY |
|---|---|---|---|---|
| 1 | | | | |
| 2 | | | | |
| 3 | | | | |
| 4 | | | | |
| 5 | | | | |

SIEMENS INDUSTRY INC

| | | |
|---|---|---|
| DES.: NAD | DATE: 16/01/16 | JOB NO.: PICA10763 |
| CKD.: BJW | ISSUE DATE: N/A | EST. NO.: XP-8047 |
| DRN.: NAD | PLAN NO.: N/A | SHEET 5 OF 15 |
| P. TIME: 15:35 | P. DATE: 17-FEB-2016 | CAD ID.: LEI-011.44-05 |

SIII 16 JAN 2016

PROPOSED
DESIGN NO. 15-0094
RED-IN YELLOW-OUT

AS INSTALLED
DATE _____
BY _____
(PRINT NAME)

| PROPOSED D | M | Y | REVISIONS | D | C | COMPLETED D | M | Y | C |
|---|---|---|---|---|---|---|---|---|---|
| | | | | | | | | | |

REGION SOUTHERN
SUB. LEITHTON 332

SIGNALS AND COMMUNICATIONS HOMEWOOD
16 JANUARY 2016
DES. NAD
CH. BJW

SSCCIV
PROGRAM DATA
PLAINFIELD, IL
135TH ST

LEI-011.44-05

DOT#260 575M

SIEMENS INDUSTRY INC
LOUISVILLE DIVISION, LOUISVILLE, KY

lei-011.44-05.dgn
17-FEB-2016

| REVISIONS | | | | |
|---|---|---|---|---|
| NO. | DATE | BY | DESCRIPTION | APP. BY |
| 1 | | | | |
| 2 | | | | |
| 3 | | | | |
| 4 | | | | |
| 5 | | | | |

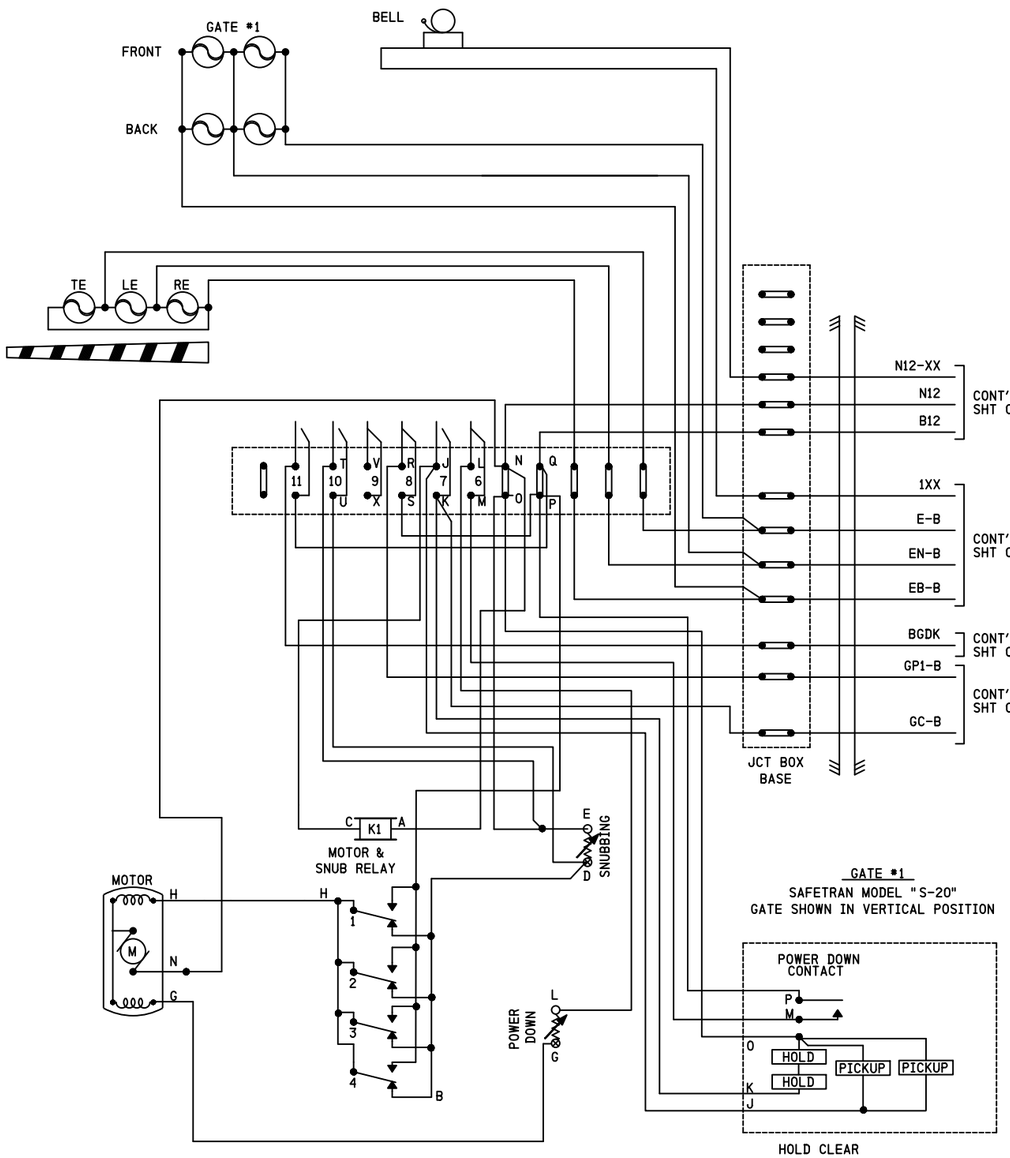


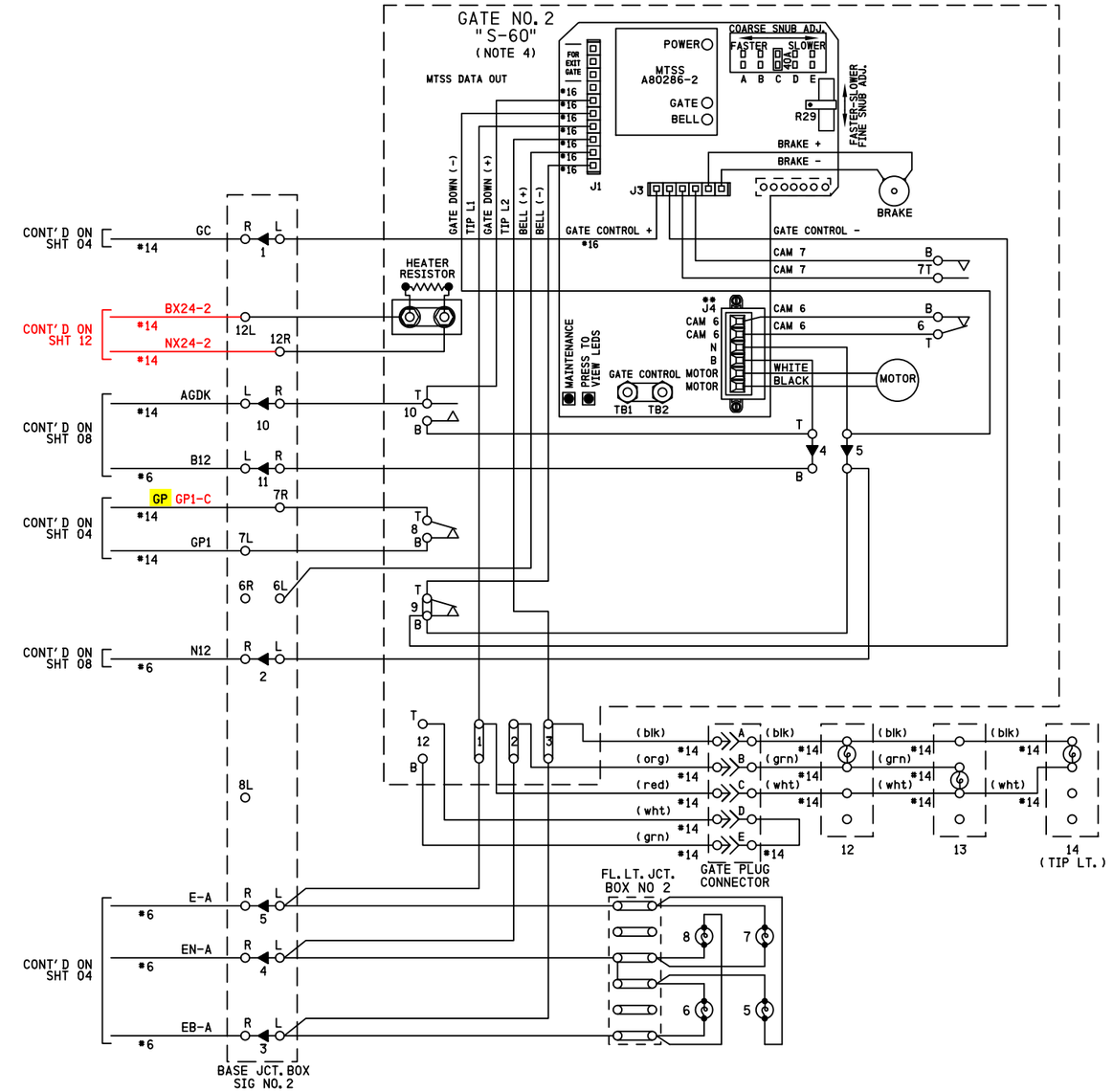


| CONTACT | CLOSED | FUNCTION |
|---|---|---|
| 1 | 45° -90° | POWER DOWN CONTROL |
| 2 | 0° -89° | POWER UP CONTROL |
| 3 | 80° -90° | FLASHING LIGHT CONTROL |
| 4 | 5° -90° | BELL CONTROL |
| 5 | 0° -5° | MOTOR SNUB CONTROL |

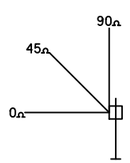


SII 16 JAN 2016

TO BE CONFIRMED

CONFIRMED
DATE
BY
(PRINT NAME)

PROPOSED
DESIGN NO. 15-0094
RED-IN YELLOW-OUT

AS INSTALLED
DATE
BY
(PRINT NAME)

| PROPOSED D | M | Y | REVISIONS | D | C | COMPLETED D | M | Y | C |
|---|---|---|---|---|---|---|---|---|---|
| | | | PLAN REDRAWN | | | 16 | 01 | 16 | NAD |
| 16 | 01 | 16 | ADD PED GATES | NAD | BJW | | | | |

REGION SOUTHERN
SUB. LEITHTON 332

SIGNALS AND COMMUNICATIONS HOMEWOOD
10 JULY 2001
DES. BJH
CH. JJ

GATE 1 & 2 MECH. CONTROL CIRCUITS

PLAINFIELD, IL
135TH ST

LEI-011.44-05 06

DOT#260 575M

lei-011.44-06.dgn
17-FEB-2016

SIEMENS INDUSTRY INC

| | | | |
|---|---|---|---|
| DES.: NAD | DATE: 16/01/16 | JOB NO.: PICA10763 | |
| CKD.: BJW | ISSUE DATE: N/A | EST. NO.: XP-8047 | |
| DRN.: NAD | PLAN NO.: N/A | SHEET 6 OF 15 | |
| P TIME: 15:36 | P DATE: 17-FEB-2016 | CAD ID.: LEI-011.44-06 | |

SIEMENS INDUSTRY INC
LOUISVILLE DIVISION, LOUISVILLE, KY

| REVISIONS | | | | |
|---|---|---|---|---|
| NO. | DATE | BY | DESCRIPTION | APP. BY |
| 1 | | | | |
| 2 | | | | |
| 3 | | | | |
| 4 | | | | |
| 5 | | | | |

| CONTACT | CLOSED AT | FUNCTION |
|---|---|---|
| 6 | 70° -90° | POWER DOWN CONTROL |
| 7 | 0° -89° | POWER UP CONTROL |
| 8 | 83° -90° | FLASHING LGT. CONTROL |
| 9 | 5° -90° | BELL CONTROL |
| 10 | 0° -5° | GATE DOWN INDICATION |
| 11 | N/A | SPARE |
| 12 | N/A | SPARE |

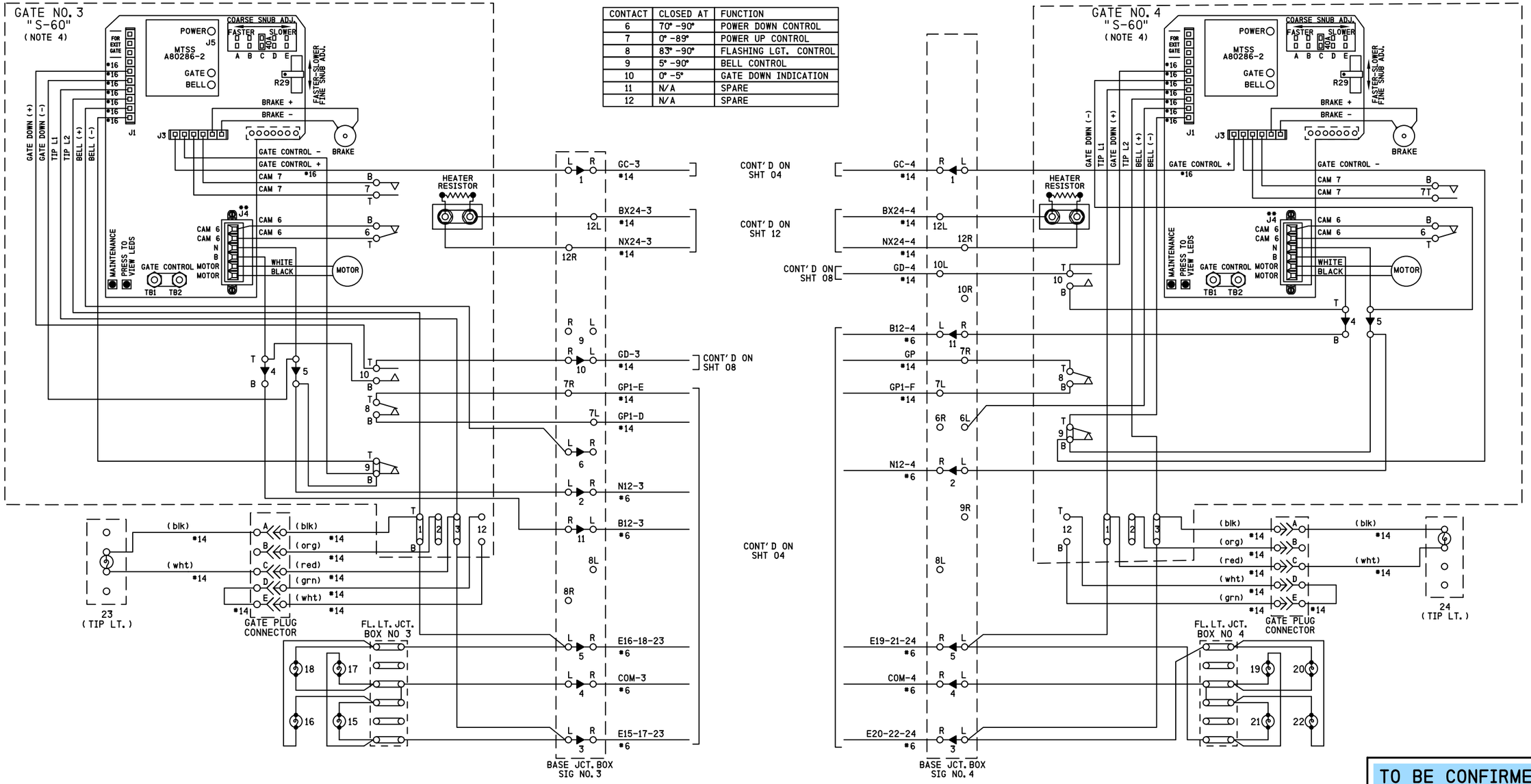


NOTES

1) ON GATE No. 3 ADD JUMPER BETWEEN TERMINALS:
   ADD JUMPER BETWEEN TERMINAL 4T & 10B,
   ADD JUMPER BETWEEN TERMINAL 5B & 9B
2) ON GATE No. 4 ADD JUMPER BETWEEN TERMINALS:
   ADD JUMPER BETWEEN TERMINAL 4T & 10B,
   ADD JUMPER BETWEEN TERMINAL 5B & 9B
3) ALL WIRING #10 AWG UNLESS OTHERWISE NOTED
4) GATE DESCENT TIME (RELEASE FROM VERTICAL TO FULLY HORIZONTAL) TO BE WITHIN 11 SECONDS
5) BELL CUT-OUT (5° -90°) WHEN REQUIRED REMOVE STRAP BETWEEN 9B AND 9T
6) ENSURE ALL TERMINALS HAVE TWO SHOULDER NUTS

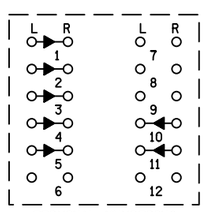

TERMINAL NUMBERING
BASE JCT. BOX 3

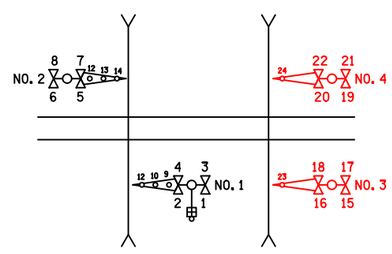


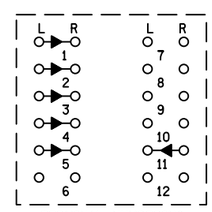

TERMINAL NUMBERING
BASE JCT. BOX 4

SIEMENS INDUSTRY INC

| | | | |
|---|---|---|---|
| DES. : NAD | DATE: 16/01/16 | JOB NO. : PICA10763 | |
| CKD. : BJW | ISSUE DATE: N/A | EST. NO. : XP-8047 | |
| DRN. : NAD | PLAN NO. : N/A | SHEET 7 OF 15 | |
| P. TIME: 15:36 | P. DATE: 17-FEB-2016 | CAD ID. : LEI-011.44-07 | |

SIII 16 JAN 2016

PROPOSED
DESIGN NO. 15-0094
RED-IN YELLOW-OUT

AS INSTALLED
DATE
BY
(PRINT NAME)

| PROPOSED D | M | Y | REVISIONS | D | C | COMPLETED D | M | Y | C |
|---|---|---|---|---|---|---|---|---|---|
| | | | | | | | | | |

TO BE CONFIRMED

CONFIRMED
DATE
BY
(PRINT NAME)

REGION SOUTHERN
SUB. LEITHTON 332

SIGNALS AND COMMUNICATIONS HOMEWOOD
16 JANUARY 2016
DES. NAD
CH. BJW

GATE 3 &4 MECH. CONTROL CIRCUITS
SAFETRAN S-60
PLAINFIELD, IL
135TH ST

LEI-011.44-07

DOT#260 575M

SIEMENS INDUSTRY INC
LOUISVILLE DIVISION, LOUISVILLE, KY

lel-011.44-07.dgn
17-FEB-2016

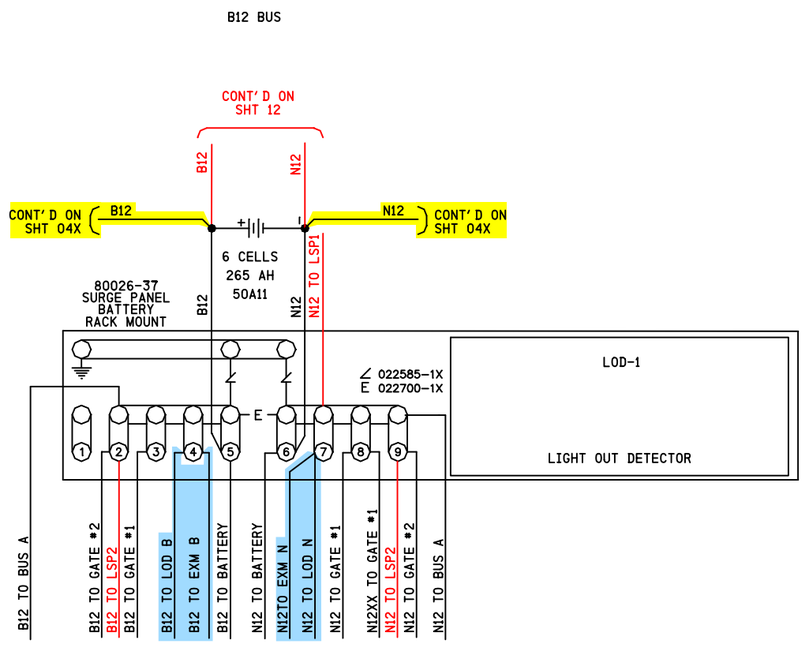


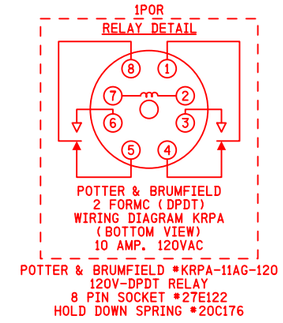


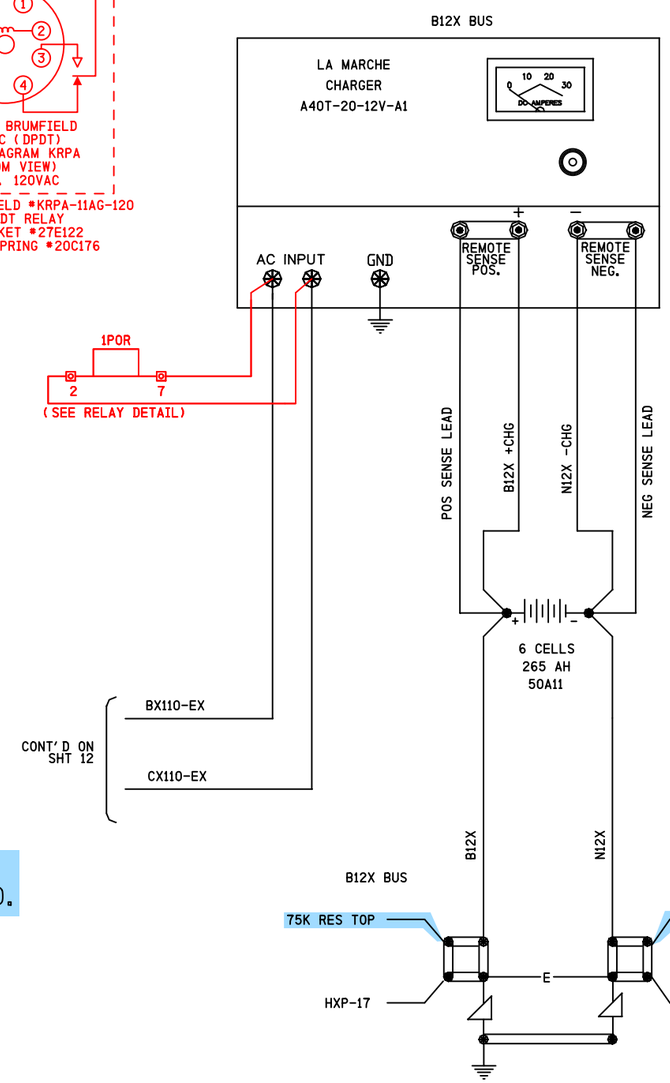


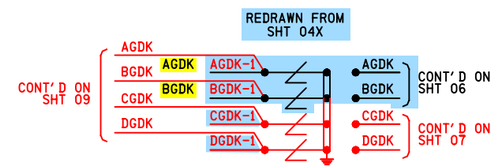


SEAR/RAILFUSION
PHASE 2: HCA AND CRTU WIRING TO BE REMOVED.

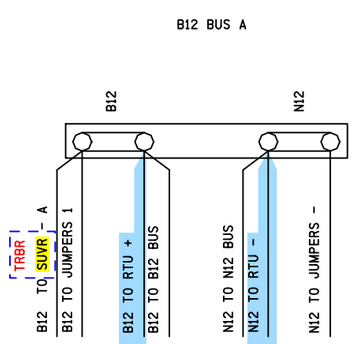


| REVISIONS | | | | |
|---|---|---|---|---|
| NO. | DATE | BY | DESCRIPTION | APP. BY |
| 1 | | | | |
| 2 | | | | |
| 3 | | | | |
| 4 | | | | |
| 5 | | | | |

| SIEMENS INDUSTRY INC | | | |
|---|---|---|---|
| DES.: NAD | DATE: 16/01/16 | JOB NO.: PICA10763 | |
| CKD.: BJW | ISSUE DATE: N/A | EST. NO.: XP-8047 | |
| DRN.: NAD | PLAN NO.: N/A | SHEET 8 OF 15 | |
| P TIME: 15:36 | P DATE: 17-FEB-2016 | CAD ID.: LEI-011.44-08 | |

SIEMENS INDUSTRY INC
LOUISVILLE DIVISION, LOUISVILLE, KY

DENOTES PROPOSAL 16-0003
REVISION 17/01/16

SII 17 JAN 2016

PROPOSED
DESIGN NO. 16-0003
RED-IN YELLOW-OUT

AS INSTALLED
DATE _____
BY _____
(PRINT NAME)

SII 16 JAN 2016

PROPOSED
DESIGN NO. 15-0094
RED-IN YELLOW-OUT

AS INSTALLED
DATE _____
BY _____
(PRINT NAME)

| PROPOSED D | M | Y | REVISIONS | D | C | COMPLETED D | M | Y | C |
|---|---|---|---|---|---|---|---|---|---|
| | | | PLAN REDRAWN | | | 16 | 01 | 16 | NAD |
| 16 | 01 | 16 | ADD PED GATES | NAD | BJW | | | | |
| 17 | 01 | 16 | SEAR/RAILFUSION | NAD | BJW | | | | |

REGION SOUTHERN
SUB. LEITHTON 332

SIGNALS AND COMMUNICATIONS HOMEWOOD
10 JULY 2001
DES. BJH
CH. JJ

BATTERY BUS & RECTIFIER WIRING
PLAINFIELD, IL
135TH ST

LEI-011.44-06 08

DOT#260 575M

lei-011.44-08.dgn
17-FEB-2016

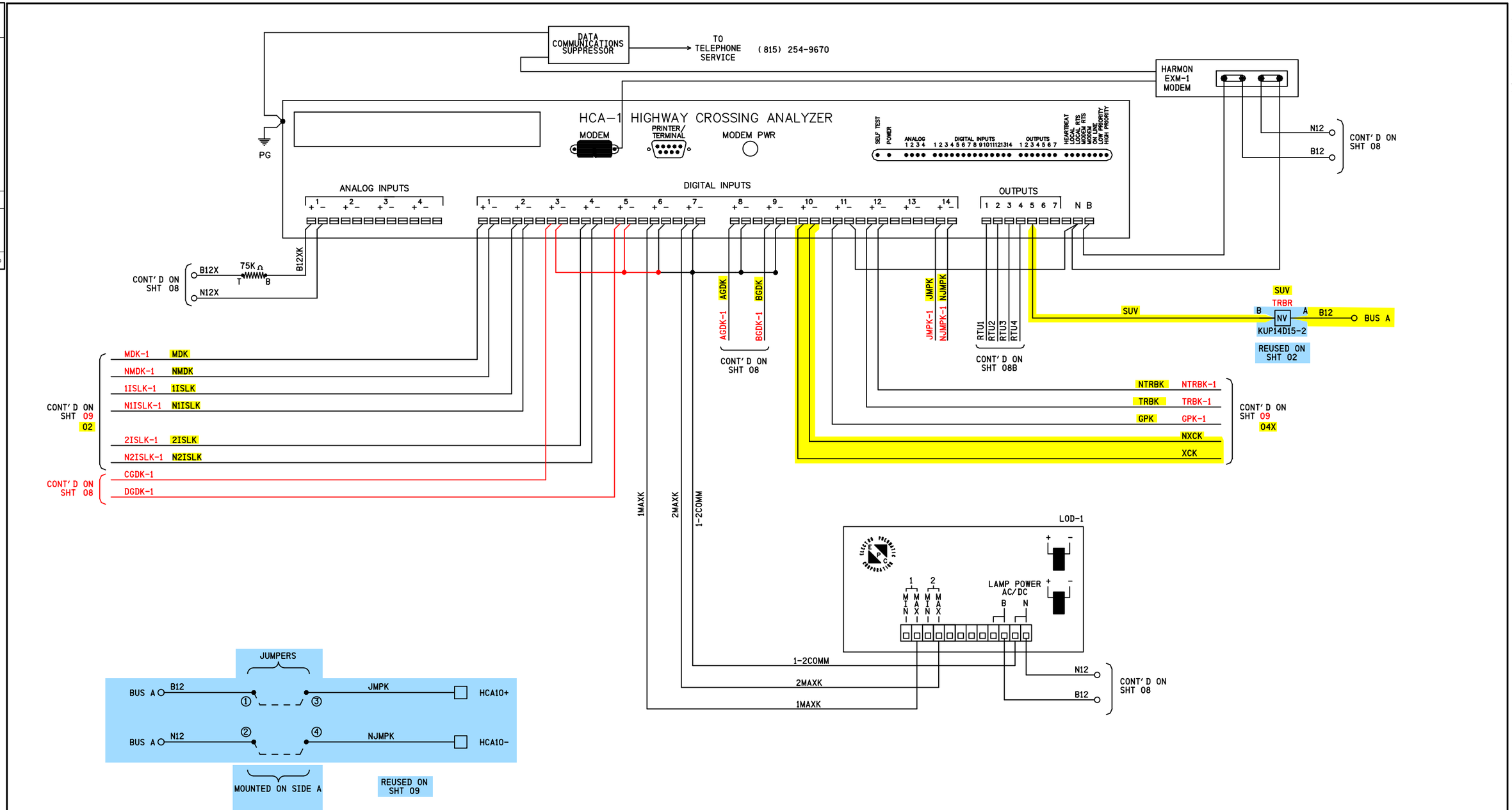


PHASE 1: WIRE AS SHOWN
PHASE 2: ALL HCA-1 EQUIPMENT AND WIRING TO BE REMOVED.

SII 17 JAN 2016

PROPOSED
DESIGN NO. 16-0003
RED-IN YELLOW-OUT

AS INSTALLED
DATE _____
BY _____
(PRINT NAME)

| PROPOSED D | M | Y | REVISIONS | D | C | COMPLETED D | M | Y | C |
|---|---|---|---|---|---|---|---|---|---|
| | | | PLAN REDRAWN | | | 16 | 01 | 16 | NAD |
| 17 | 01 | 16 | SEAR/RAILFUSION | NAD | BJW | | | | |

REGION SOUTHERN
SUB. LEITHTON 332
SIGNALS AND COMMUNICATIONS HOMEWOOD
10 JULY 2001
DES. BJH
CH. JJ
HIGHWAY CROSSING ANALYZER & LOD WIRING
PLAINFIELD, IL
135TH ST

LEI-011.44-06A 8A
DOT#260 575M

| REVISIONS NO. | DATE | BY | DESCRIPTION | APP. BY |
|---|---|---|---|---|
| 1 | | | | |
| 2 | | | | |
| 3 | | | | |
| 4 | | | | |
| 5 | | | | |

SIEMENS INDUSTRY INC

| | | | |
|---|---|---|---|
| DES.: NAD | DATE: 16/01/16 | JOB NO.: PICA10763 | |
| CKD.: BJW | ISSUE DATE: N/A | EST. NO.: XP-8047 | |
| DRN.: NAD | PLAN NO.: N/A | SHEET 9 OF 15 | |
| P TIME: 15:36 | P DATE: 17-FEB-2016 | CAD ID.: LEI-011.44-08A | |

SIEMENS INDUSTRY INC
LOUISVILLE DIVISION, LOUISVILLE, KY

lei-011.44-08a.dgn
17-FEB-2016

| REVISIONS | | | | |
|---|---|---|---|---|
| NO. | DATE | BY | DESCRIPTION | APP. BY |
| 1 | | | | |
| 2 | | | | |
| 3 | | | | |
| 4 | | | | |
| 5 | | | | |

lel-011.44-08b.dgn
17-FEB-2016

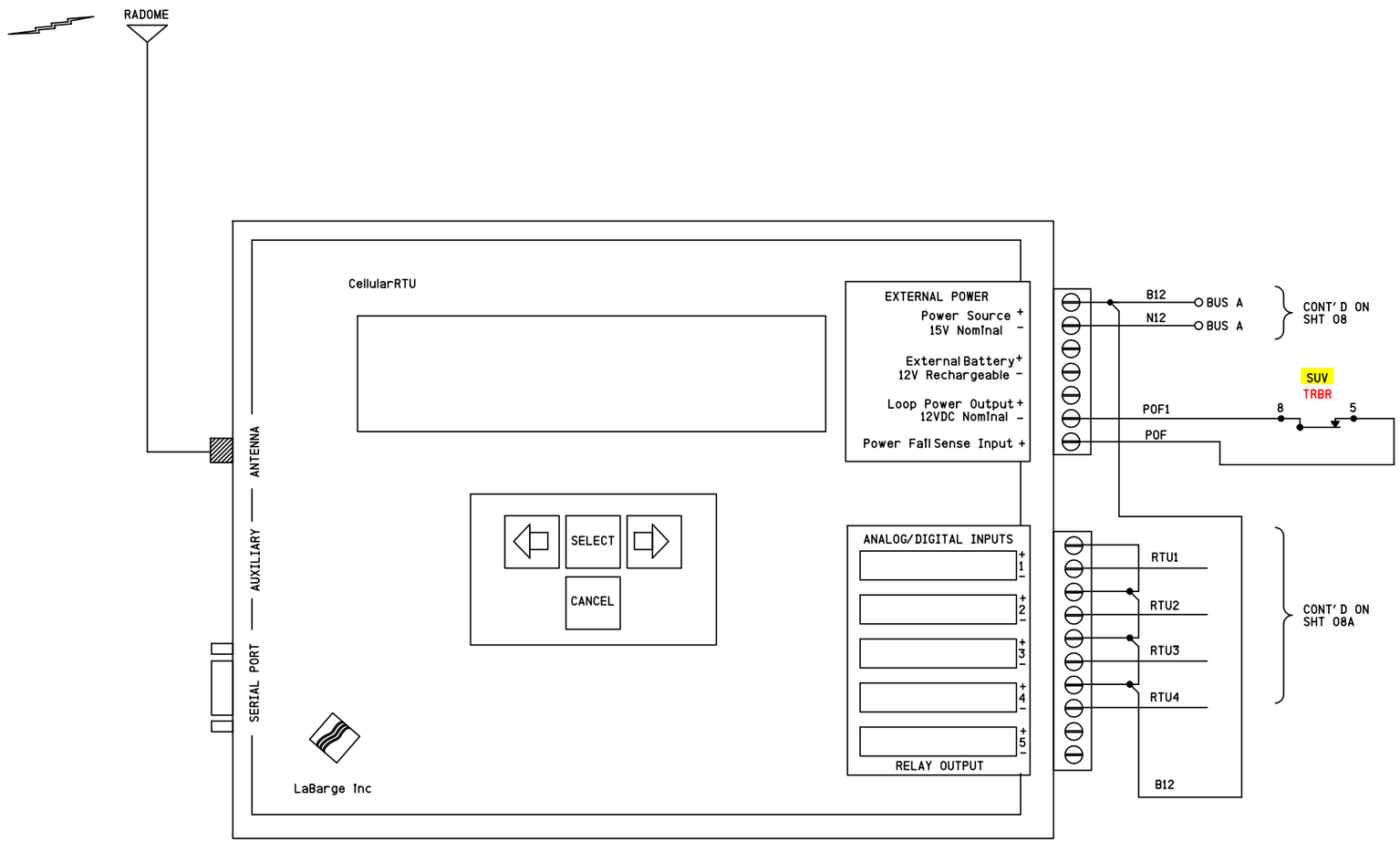


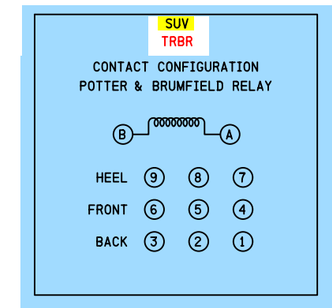


REUSED ON SHT 09

PHASE 1: CRTU TO REMAIN IN SERVICE
PHASE 2: ALL CRTU EQUIPMENT AND WIRING TO BE REMOVED.

SII 17 JAN 2016

PROPOSED
DESIGN NO. 16-0003
RED-IN YELLOW-OUT

AS INSTALLED
DATE _____
BY _____
(PRINT NAME)

| PROPOSED D | M | Y | REVISIONS | D | C | COMPLETED D | M | Y | C |
|---|---|---|---|---|---|---|---|---|---|
| | | | PLAN REDRAWN | | | 16 | 01 | 16 | NAD |
| 17 | 01 | 16 | SEAR/RAILFUSION | NAD | BJW | | | | |

REGION SOUTHERN
SUB. LEITHTON 332

SIGNALS AND COMMUNICATIONS HOMEWOOD
10 JULY 2001
DES. BJH
CH. JJ

RTU UNIT & WIRING

PLAINFIELD, IL
135TH ST

LEI-011.44-06B 8B

DOT#260 575M

| SIEMENS INDUSTRY INC | | | |
|---|---|---|---|
| DES.: NAD | DATE: 16/01/16 | JOB NO.: PICA10763 | |
| CKD.: BJW | ISSUE DATE: N/A | EST. NO.: XP-8047 | |
| DRN.: NAD | PLAN NO.: N/A | SHEET 10 OF 15 | |
| P TIME: 15:36 | P DATE: 17-FEB-2016 | CAD ID.: LEI-011.44-08B | |

SIEMENS INDUSTRY INC
LOUISVILLE DIVISION, LOUISVILLE, KY

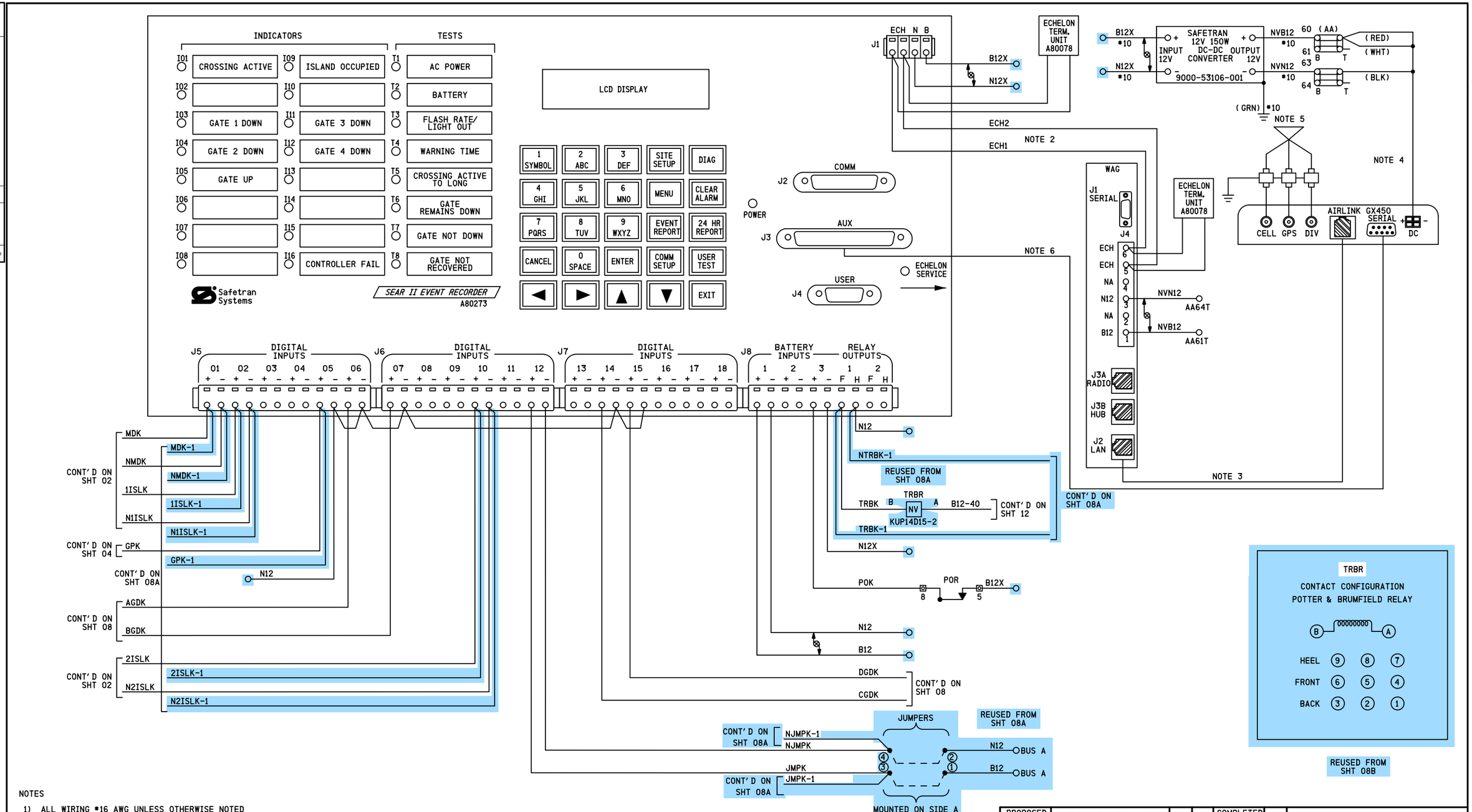


NOTES

1) ALL WIRING #16 AWG UNLESS OTHERWISE NOTED
2) USE BELDEN CABLE, PART # 8461-u500-60 FOR ALL ECHELON AND LAN WIRING
3) STRAIGHT THROUGH CAT 5/5E UTP CABLE
4) MODEM POWER CABLE WITH A 4 PIN CONNECTOR GREEN WIRE NOT USED AND NOT TERMINATED
5) ANTENNA, CABLE AND POLYPHASER INSTALLED PER RFAIG
6) RS-232 SERIAL STRAIGHT THROUGH MODEM CABLE

DENOTES TWISTED PAIR

PHASE 1: TEMPORARY WIRING TO HCA AS SHOWN
PHASE 2: ALL WIRING TO HCA TO BE REMOVED.

FIELD TO VERIFY TERMINALS

TO BE CONFIRMED

CONFIRMED
DATE
BY
(PRINT NAME)

SII 17 JAN 2016

PROPOSED
DESIGN NO. 16-0003
RED-IN YELLOW-OUT

AS INSTALLED
DATE
BY
(PRINT NAME)

| REVISIONS | PROPOSED D | PROPOSED M | PROPOSED Y | D | C | COMPLETED D | COMPLETED M | COMPLETED Y | C |
|---|---|---|---|---|---|---|---|---|---|
| | | | | | | | | | |

REGION SOUTHERN
SUB. LEITHTON 332

SIGNALS AND COMMUNICATIONS HOMEWOOD
16 JANUARY 2016
DES. NAD
CH. BJW

SAFETRAN EVENT ANALYZER RECORDER II (SEAR II)
PLAINFIELD, IL
135TH ST

LEI-011.44-09

DOT#260 575M

lei-011.44-09.dgn
17-FEB-2016

| REVISIONS | | | | |
|---|---|---|---|---|
| NO. | DATE | BY | DESCRIPTION | APP. BY |
| 1 | | | | |
| 2 | | | | |
| 3 | | | | |
| 4 | | | | |
| 5 | | | | |

SIEMENS INDUSTRY INC

| | | | |
|---|---|---|---|
| DES. : NAD | DATE: 16/01/16 | JOB NO. : P1CA10763 | |
| CKD. : BJW | ISSUE DATE: N/A | EST. NO. : XP-8047 | |
| DRN. : NAD | PLAN NO. : N/A | SHEET 11 OF 15 | |
| P. TIME: 15:36 | P. DATE: 17-FEB-2016 | CAD ID. : LEI-011.44-09 | |

SIEMENS INDUSTRY INC
LOUISVILLE DIVISION, LOUISVILLE, KY

| REVISIONS | | | | |
|---|---|---|---|---|
| NO. | DATE | BY | DESCRIPTION | APP. BY |
| 1 | | | | |
| 2 | | | | |
| 3 | | | | |
| 4 | | | | |
| 5 | | | | |

MENU ITEMS

| | | |
|---|---|---|
| RESET NAMES/MODULES | NO | |
| AC OFF ALARM TIME (minutes) | 60 | MIN. |
| MINIMUM NORMAL WARNING TIME (seconds) | 22 | SEC. |
| DESIRED WARNING TIME (seconds) | 32 | SEC. |
| IGNORE WARNING TIMES BELOW (seconds) | 3 | SEC. |
| PRERING/STNSTOP TIME (minutes) | 10 | MIN. |
| SWITCH MOVE TIMER (minutes) | 30 | MIN. |
| HOW MANY GATES? | 4 | |
| GATE 1 DOWN | ☐ NOT ENERGIZED ■ ENERGIZED | |
| GATE 2 DOWN | ☐ NOT ENERGIZED ■ ENERGIZED | |
| GATE 3 DOWN | ☐ NOT ENERGIZED ■ ENERGIZED | |
| GATE 4 DOWN | ☐ NOT ENERGIZED ■ ENERGIZED | |
| HOW MANY SETS OF GCPS? | 0 | |
| (IF 1 SET IS SELECTED) DOES GCP HAVE STANDBY? | N/A | |
| (IF 2 SETS ARE SELECTED) DOES 2ND GCP HAVE STANDBY? | N/A | |
| HOW MANY ILODS? | 0 | |
| (IF 1 OR MORE IS SELECTED) MINIMUM FLASH RATE | 55 | |
| HOW MANY SSCCIII UNITS? | 0 | |
| 1SSCC TESTSWINPUT? | N/A | SEC. |
| GATE NOT DOWN ALARM TIME | 15 | SEC. |
| CROSSING ACTIVE ALARM AFTER (minutes) | 20 | MIN. |
| FLASHING TROUBLE LIGHT OUTPUT? (NOTE 5) | NO | |
| DIGITAL INPUTS NAMES | DEFAULT | |
| (XB14) XB12 LOW VOLTAGE ALARMS (IN TENTHS) | 111 | |
| (MB12)B12 LOW VOLTAGE ALARMS (IN TENTHS) | 111 | |
| (MB12)B12-1 LOW VOLTAGE ALARMS (IN TENTHS) | 111 | |
| (IF DIGITAL INPUT NAMES IS "USER DEFINED") (SB12) B14 LOW VOLTAGE ALARMS (IN TENTHS) | 111 | |
| ALLOW DTMF CONTROL | NO | |
| (IF DTMF CONTROL IS SELECTED) DIGIT #1 | N/A | |
| DIGIT #2 | N/A | |
| DIGIT #3 | N/A | |
| DIGIT #4 | N/A | |
| DIGIT #5 | N/A | |
| VHFC CHANNEL (1 to 8) | N/A | |
| DTMF TIME-OUT (30 TO 240 SEC.) | N/A | SEC. |
| DTMF OUTPUT 2 DELAY (NOTE 6) | N/A | |

CURRENT SOFTWARE REVISION:
EXECUTIVE: 9V645-A01AH.bin APPLICATION: CN028B5.CDL

CDL SUBJECT TO CHANGE

DIGITAL INPUT CONFIGURATION

| DIGITAL INPUT | USAGE | LABEL | NORMAL LOGIC STATE |
|---|---|---|---|
| 1 | MD/GCP 1 | MD/GCP1K /NMD/GCP1K (NOTE 2) | 1 |
| 2 | ISLAND 1 | ISL1K/NISL1K (NOTE 2) | 1 |
| 3 | GOD | GODK (NOTE 2) | 1 |
| 4 | GATE CONTROL 1 | 1GCK (NOTE 2) | 1 |
| 5 | GATE UP | GPK (NOTE 2) | 1 |
| 6 | GATE DOWN 1 | 1GDK (NOTE 3) | 0 OR 1 (NOTE 1) |
| 7 | GATE DOWN 2 | 2GDK (NOTE 3) | 0 OR 1 (NOTE 1) |
| 8 | BELL/LIGHTS 1 | 1BELLK (NOTE 2) | 0 |
| 9 | MD/GCP 2 | MD/GCP2K /NMD/GCP2K (NOTE 2) | 1 |
| 10 | ISLAND 2 | ISL2K/NISL2K (NOTE 2) | 1 |
| 11 | WRAP 1 | 1WAK (NOTE 2) | 1 |
| 12 | WRAP 2 | 2WAK (NOTE 2) | 1 |
| 13 | BELL/LIGHTS 2 | 2BELLK (NOTE 2) | 0 |
| 14 | GATE DOWN 3 | 3GDK (NOTE 3) | 0 OR 1 (NOTE 1) |
| 15 | GATE DOWN 4 | 4GDK (NOTE 3) | 0 OR 1 (NOTE 1) |
| 16 | GATE CONTROL 2 | 2GCK (NOTE 2) | 1 |
| 17 | TEST SWITCH | TESTSWK (NOTE 2) | 1 |
| 18 | DAX1 | DAX1 (NOTE 2) | 1 |

LED CONFIGURATION NOTE 4

| LED | LABEL | OFF= | ON= |
|---|---|---|---|
| 01 | CROSSING ACTIVE | MD/GCP1K & MD/GCP2K & XK & ISL1K & ISL2K ALL UP | MD/GCP1K OR MD/GCP2K OR XK OR ISL1K OR ISL2K DOWN |
| 02 | GATE CONTROL 1 | 1GCK UP | 1GCK DOWN |
| 03 | GATE 1 DOWN | 1GDK OFF (GATE 1 NOT DOWN) | 1GDK ON (GATE 1 DOWN) |
| 04 | GATE 2 DOWN | 2GDK OFF (GATE 2 NOT DOWN) | 2GDK ON (GATE 2 DOWN) |
| 05 | GATE(S) UP | GPK ON (GATES UP) | GPK OFF (GATES NOT UP) |
| 06 | BELL CONTROL 1 | 1BELLK OFF | 1BELLK ON |
| 07 | WRAP 1 | 1WAK UP | 1WAK DOWN |
| 08 | DAX | DAX1-4 ALL UP | DAX1, 2, 3 OR 4 DOWN |
| 09 | ISLAND OCCUPIED | ISLAND 1 OR 2 NOT OCCUPIED | ISLAND 1 & ISLAND 2 OCCUPIED |
| 10 | GATE CONTROL 2 | 2GCK UP | 2GCK DOWN |
| 11 | GATE 3 DOWN | 3GDK OFF (GATE 3 NOT DOWN) | 3GDK ON (GATE 3 DOWN) |
| 12 | GATE 4 DOWN | 4GDK OFF (GATE 4 NOT DOWN) | 4GDK ON (GATE 4 DOWN) |
| 13 | GATE OFF | GOD ON | GOD OFF |
| 14 | BELL CONTROL 2 | 2BELLK OFF | 2BELLK ON |
| 15 | WRAP 2 | 2WAK UP | 2WAK DOWN |
| 16 | CONTROLLER FAIL | CONTROLLER OK | CONTROLLER FAIL |

ALARM CONDITIONS NOTE 7
ALARM (TEST) LEDS (GREEN LED = NO ALARM)

AC POWER (T1) (WHEN BATTERY INPUT #3 USED)
- RED FLASHING - AC CURRENTLY OFF, MORE THAN THE USER SELECTED TIME.
- RED STEADY - AC WAS OFF MORE THAN USER TIME SELECTED, BUT HAS SINCE BEEN RESTORED.
- YELLOW FLASHING - AC CURRENTLY OFF, FOR LESS THAN THE USER SELECTED TIME.
- YELLOW STEADY - AC WAS OFF LESS THAN USER TIME SELECTED, BUT HAS SINCE BEEN RESTORED.

BATTERY (T2)
- RED FLASHING - ONE OF THE BATTERY BANKS IS IN ALARM FOR MORE THAN 5 SECONDS.
- RED STEADY - ONE OF THE BATTERY BANKS IS IN ALARM FOR MORE THAN 5 SECONDS BUT HAS SINCE BEEN RESTORED.
- YELLOW FLASHING - ONE OF THE BATTERY BANKS IS IN ALARM FOR LESS THAN 5 SECONDS.
- YELLOW STEADY - ONE OF THE BATTERY BANKS IS IN ALARM FOR LESS THAN 5 SECONDS BUT HAS SINCE BEEN RESTORED.

LOD (T3)
- RED FLASHING - ONE OR MORE BULBS WAS OUT DURING A TRAIN MOVE, OR ONE OR MORE ILOD's ARE OFFLINE.
- RED STEADY - ONE OF THE ABOVE CONDITIONS HAD OCCURRED, BUT HAS SINCE RECOVERED.
- YELLOW STEADY - THE FLASH RATE WAS IN ALARM, BUT HAS SINCE CLEARED.
- YELLOW FLASHING - THE FLASH RATE WAS NOT NORMAL FOR LAST TRAIN MOVE.

WARN TIME (T4)
- RED FLASHING - LAST TRAIN MOVE HAD A WARNING TIME LESS THAN MIN WARN TIME ENTERED DURING SITE SETUP, DEFAULT IS 20 SECONDS.
- RED STEADY - WARNING TIME ALARM HAD BEEN SET, BUT LAST TRAIN MOVE HAD A NORMAL WARNING TIME.
- YELLOW FLASHING - LAST TRAIN HAD A WARNING TIME LESS THAN DESIRED WARN TIME BUT MORE THAN MIN WARN TIME.
- YELLOW STEADY - WARNING TIME MONITOR HAD BEEN SET, BUT LAST TRAIN MOVE HAD A NORMAL WARNING TIME.

CROSSING ACTIVE TOO LONG (T5)
- RED FLASHING - CROSSING IS ACTIVE AND HAS BEEN FOR MORE THAN THE USER SETTING, DEFAULT IS 20 MINUTES.
- RED STEADY - CROSSING WAS ACTIVE FOR MORE THAN THE USER SETTING, DEFAULT IS 20 MINUTES, AND HAS SINCE RECOVERED.

GATE REMAINS DOWN (T6)
- RED FLASHING - GCK IS UP, BUT ONE OF THE GATES HAS BEEN DOWN FOR 20+ MINUTES.
- RED STEADY - ALARM WAS TRIGGERED, BUT THE GATE(S) HAVE SINCE RECOVERED.

GATE NOT DOWN (T7)
- RED FLASHING - ONE OR MORE GATES, TOOK LONGER THAN THE USER DEFINED SETTING TO LOWER AFTER GCK WENT DOWN.
- RED STEADY - ALARM WAS TRIGGERED, BUT THE LAST GATE MOVE WAS OK.

GATE NOT RECOVERD (T8)
- RED FLASHING - GATE OFF HAS BEEN DETECTED.
- YELLOW FLASHING - ONE OR MORE GATES, TOOK LONGER THAN 20 SECONDS TO RAISE AFTER GCK WENT UP.
- YELLOW STEADY - ALARM WAS TRIGGERED, BUT GATES HAS SINCE RECOVERED TO PICK GPK.

SSCC FAIL (I16)
- RED STEADY - MAINTK INPUT IS LOW.
- OFF - SSCC OK.

BATTERY INPUT CONFIGURATION

| INPUT | USAGE | LABEL | NORMAL RANGE | |
|---|---|---|---|---|
| 1 | LIGHT BATTERY | XB12/XN12 | MINIMUM LEVEL - 18 VDC | |
| 2 | STANDBY BATTERY | B12/N12 | MINIMUM LEVEL - 18 VDC | |
| 3 | STANDBY BATTERY | B12-1/N12-1 | MINIMUM LEVEL - 18 VDC | |
| 3 | POR | AC/POR | POWER ON > 0.5 VDC | (WHEN REQUIRED) |

RELAY OUTPUT CONFIGURATION

| OUTPUT | USAGE | LABEL | CONTACT CLOSED | CONTACT OPEN | TOGGLE | |
|---|---|---|---|---|---|---|
| 1 | TROUBLE LIGHT | TRBLE LITE | OFF | ON | FLASH | NOTE 5 |
| 2 | DTMF OUTPUT 1 | DTMFOUT1 | ACTIVE | INACTIVE | N/U | |
| 3 | DTMF OUTPUT 2 | DTMFOUT2 | ACTIVE | INACTIVE | N/U | NOTE 6 |

NOTES
1) DEPENDING ON DESIGN OF THE CIRCUIT.
2) THESE INPUTS ARE AUTOMATICALLY DETECTED.
3) GDK1, 2, 3 & 4 INPUT TAGS WILL BE ASSIGNED BY EXISTING MENU QUESTIONS. IF NOT ASSIGNED, THESE INPUTS WILL BE OPEN FOR USE BY OTHER TAGS, WHICH CAN BE ASSIGNED FROM THE DIGITAL CONFIGURATION MENU ON THE SEARII.
4) LED's 01-16 ALL OFF IN NORMAL LOGIC STATE (NO TRAIN). ALL LED'S WILL BE OFF, UNLESS THE CIRCUIT REPRESENTED IS IN THE ACTIVE STATE. (I.e. IF 1GCK IS LOW, GATES WILL DROP, LED2 WILL BE ON, THEN WHEN 1GDK, 2GDK ARE IN THE DOWN STATE, LED's 3 &4 WILL BE LIT.)
5) IF THE ANSWER IS NO, THE TROUBLE LIGHT OUTPUT IS EITHER ON (NORMAL STATE) OR OFF (ALARM STATE). IF THE ANSWER IS YES, THE TROUBLE LIGHT OUTPUT IS EITHER ON (NORMAL STATE) OR FLASHING (ALARM STATE).
6) DTMF2 OUTPUT CAN BE ASSIGNED TO A RELAY OUTPUT ON AN EXTERNAL I/O MODULE, CONNECTED VIA ECHELON TO THE SEARII.
7) ALL LED'S GREEN UPON START OF THE APPLICATION PROGRAM. ALL ALARM LED's CAN BE RESET TO THEIR CURRENT STATE BY PRESSING THE "CLEAR ALARM" KEY. IF AN ALARM CONDITION IS STILL VALID, THE LED WIL CONTINUE TO FLASH. ALL STEADY-COLORED LED's WILL BE RESET TO GREEN STEADY. ANY LED's NOT LIT ARE DEFECTIVE OR A PROBLEM EXISTS WITH THE APPLICATION PROGRAM.

SIII 17 JAN 2016

PROPOSED
DESIGN NO. 16-0003
RED-IN YELLOW-OUT

AS INSTALLED
DATE
BY
(PRINT NAME)

| PROPOSED D | M | Y | REVISIONS | D | C | COMPLETED D | M | Y | C |
|---|---|---|---|---|---|---|---|---|---|
| | | | | | | | | | |

REGION SOUTHERN
SUB. LEITHTON 332

SIGNALS AND COMMUNICATIONS HOMEWOOD
16 JANUARY 2016
DES. NAD
CH. BJW

SEARII
PROGRAM DATA
PLAINFIELD, IL
135TH ST

LEI-011.44-10

DOT#260 575M

SIEMENS INDUSTRY INC
DES.: NAD | DATE: 16/01/16 | JOB NO.: PICA10763
CKD.: BJW | ISSUE DATE: N/A | EST. NO.: XP-8047
DRN.: NAD | PLAN NO.: N/A | SHEET 12 OF 15
P. TIME: 15:36 | P. DATE: 17-FEB-2016 | CAD ID.: LEI-011.44-10

lei-011.44-10.dgn
17-FEB-2016

SIEMENS INDUSTRY INC
LOUISVILLE DIVISION, LOUISVILLE, KY

| REVISIONS | | | | |
|---|---|---|---|---|
| NO. | DATE | BY | DESCRIPTION | APP. BY |
| 1 | | | | |
| 2 | | | | |
| 3 | | | | |
| 4 | | | | |
| 5 | | | | |

EQUIPMENT RACK #1

FRONT

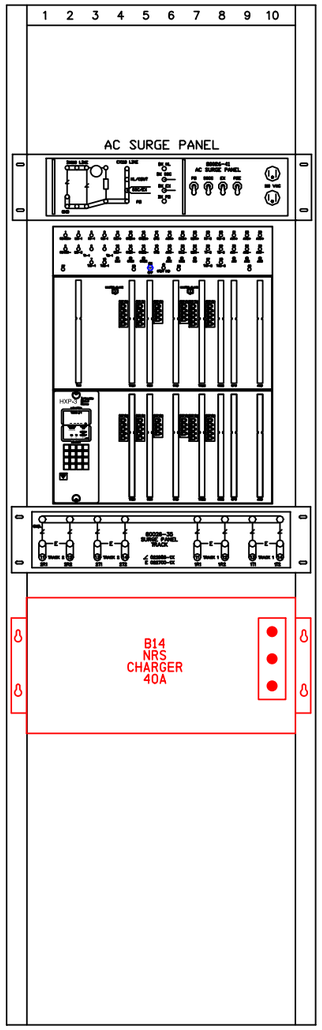


EQUIPMENT RACK #2

FRONT

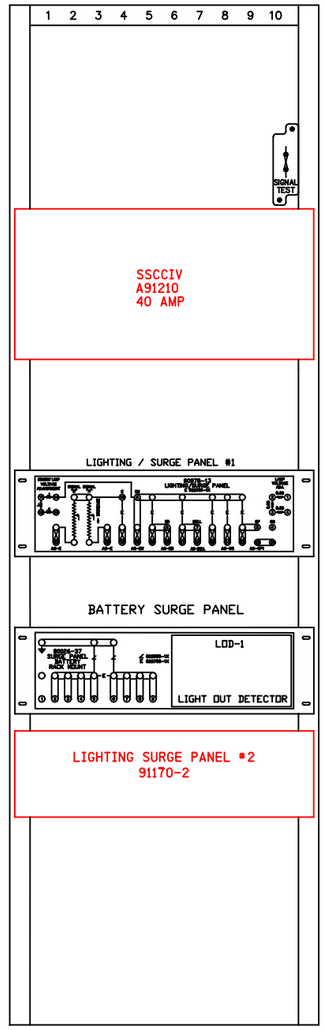


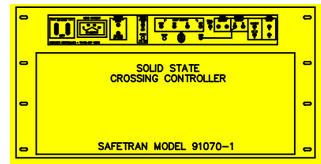


PRIME GROUND PLATE

SIEMENS INDUSTRY INC

| | | | |
|---|---|---|---|
| DES. : NAD | DATE: 16/01/16 | JOB NO. : PICA10763 | |
| CKD. : BJW | ISSUE DATE: N/A | EST. NO. :XP-8047 | |
| DRN. : NAD | PLAN NO. :N/A | SHEET 13 OF 15 | |
| P. TIME:15:36 | P. DATE: 17-FEB-2016 | CAD ID. :LEI-011.44-11 | |

SII 16 JAN 2016

PROPOSED

DESIGN NO. 15-0094

RED-IN YELLOW-OUT

AS INSTALLED

DATE _____

BY _____

(PRINT NAME)

| PROPOSED D | PROPOSED M | PROPOSED Y | REVISIONS | D | C | COMPLETED D | COMPLETED M | COMPLETED Y | C |
|---|---|---|---|---|---|---|---|---|---|
| | | | PLAN REDRAWN | | | 16 | 01 | 16 | NAD |
| 16 | 01 | 16 | ADD PED GATES | NAD | BJW | | | | |

REGION SOUTHERN

SUB. LEITHTON 332

SIGNALS AND COMMUNICATIONS HOMEWOOD

DES. BJH

10 JULY 2001

CH. JJ

EQUIPMENT RACK
LAYOUT DETAIL
PLAINFIELD, IL
135TH ST

LEI-011.44-07

11

DOT#260 575M

SIEMENS INDUSTRY INC
LOUISVILLE DIVISION, LOUISVILLE, KY

lei-011.44-11.dgn
17-FEB-2016

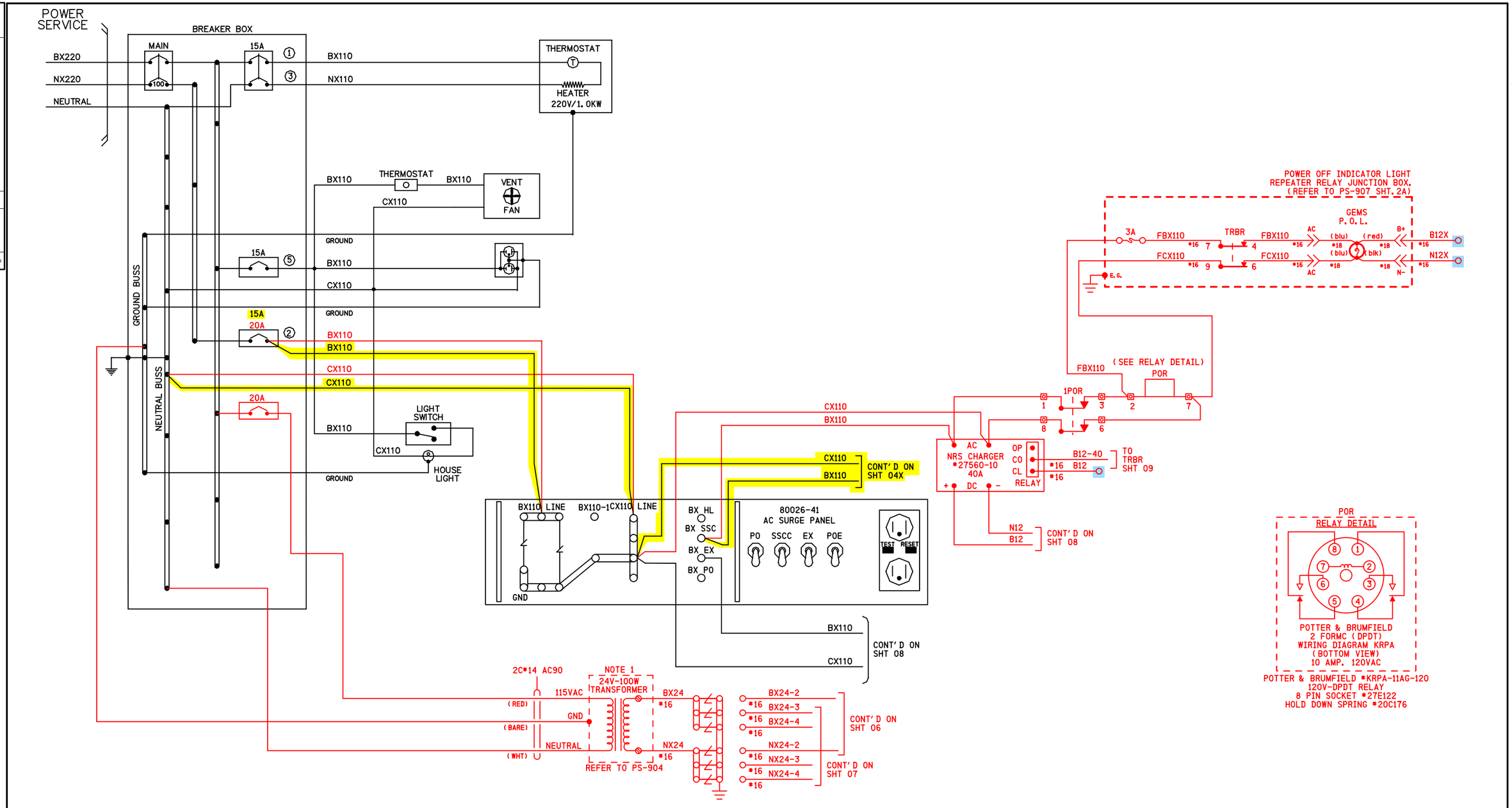


| REVISIONS | | | | |
|---|---|---|---|---|
| NO. | DATE | BY | DESCRIPTION | APP. BY |
| 1 | | | | |
| 2 | | | | |
| 3 | | | | |
| 4 | | | | |
| 5 | | | | |

lei-011.44-12.dgn
17-FEB-2016

NOTES

1) 24 VOLT - 100 WATT TRANSFORMER (CN STOCK #25-49-138)

FIELD TO VERIFY TERMINALS

TO BE CONFIRMED

CONFIRMED
DATE _____
BY _____
(PRINT NAME)

SII 16 JAN 2016

PROPOSED
DESIGN NO. 15-0094
RED-IN YELLOW-OUT

AS INSTALLED
DATE _____
BY _____
(PRINT NAME)

| PROPOSED D | M | Y | REVISIONS | D | C | COMPLETED D | M | Y | C |
|---|---|---|---|---|---|---|---|---|---|
| | | | PLAN REDRAWN | | | 16 | 01 | 16 | NAD |
| 16 | 01 | 16 | ADD PED GATES | NAD | BJW | | | | |

REGION SOUTHERN
SUB. LEITHTON 332
SIGNALS AND COMMUNICATIONS HOMEWOOD
10 JULY 2001
DES. BJH
CH. JJ
AC POWER DISTRIBUTION
PLAINFIELD, IL
135TH ST
LEI-011.44-08 12
DOT#260 575M

SIEMENS INDUSTRY INC
LOUISVILLE DIVISION, LOUISVILLE, KY

SIEMENS INDUSTRY INC

| | | | |
|---|---|---|---|
| DES.: NAD | DATE: 16/01/16 | JOB NO.: PICA10763 | |
| CKD.: BJW | ISSUE DATE: N/A | EST. NO.: XP-8047 | |
| DRN.: NAD | PLAN NO.: N/A | SHEET 14 OF 15 | |
| P TIME: 15:36 | P DATE: 17-FEB-2016 | CAD ID.: LEI-011.44-12 | |

| REVISIONS | | | | |
|---|---|---|---|---|
| NO. | DATE | BY | DESCRIPTION | APP. BY |
| 1 | | | | |
| 2 | | | | |
| 3 | | | | |
| 4 | | | | |
| 5 | | | | |

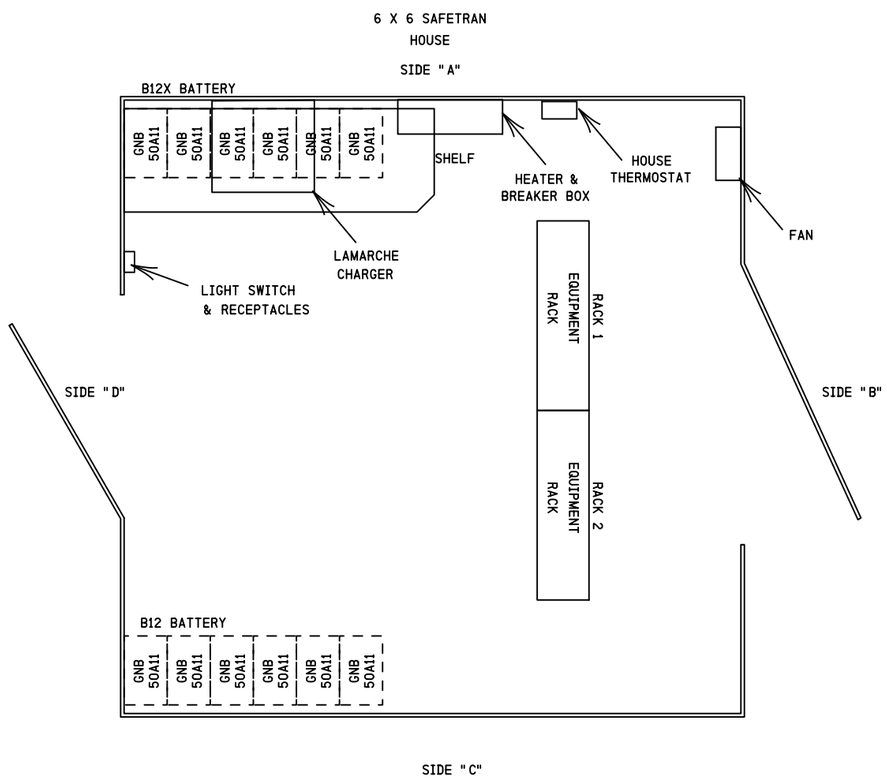


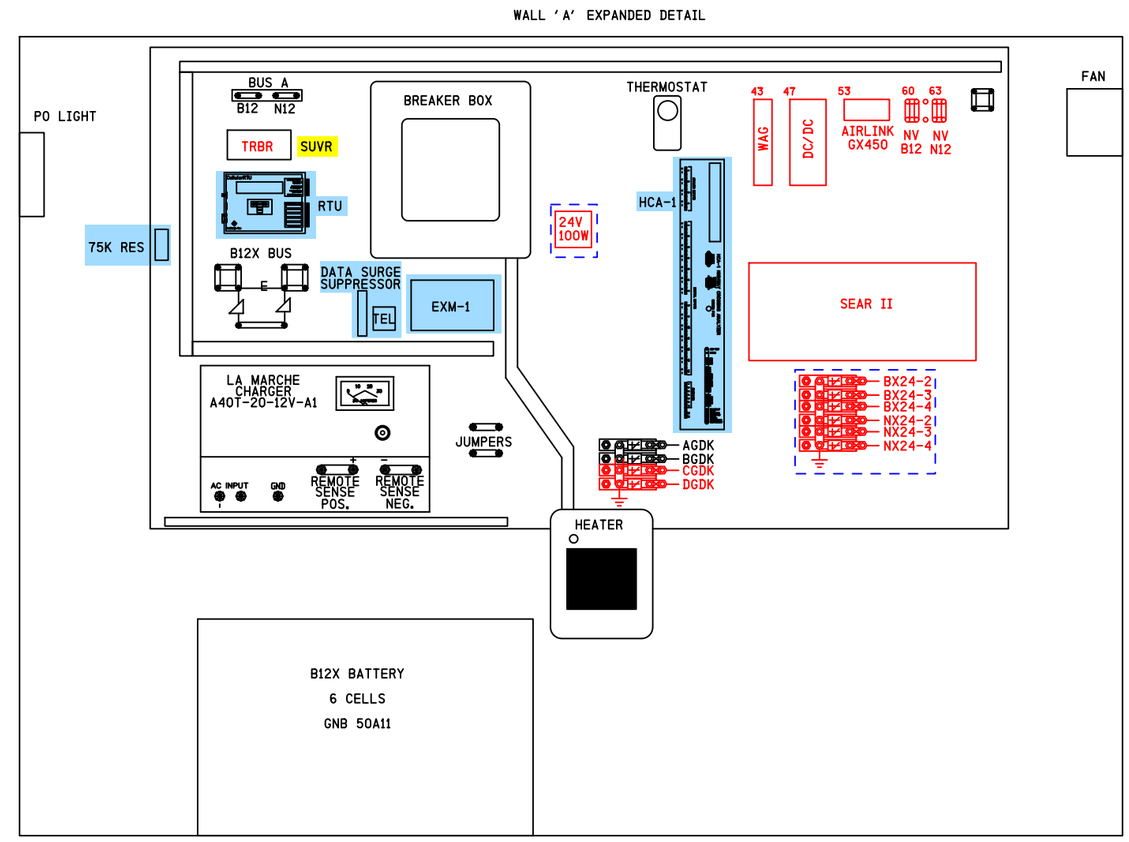


PHASE 1: SEAR/RAILFUSION INSTALLED
PHASE 2: ALL HCA AND CRTU EQUIPMENT AND WIRING TO BE REMOVED.

DENOTES PROPOSAL 15-0094
REVISION 16/01/16

SII 17 JAN 2016

PROPOSED
DESIGN NO. 16-0003
RED-IN YELLOW-OUT

AS INSTALLED
DATE _____
BY _____
(PRINT NAME)

SII 16 JAN 2016

PROPOSED
DESIGN NO. 15-0094
RED-IN YELLOW-OUT

AS INSTALLED
DATE _____
BY _____
(PRINT NAME)

| PROPOSED D | PROPOSED M | PROPOSED Y | REVISIONS | D | C | COMPLETED D | COMPLETED M | COMPLETED Y | C |
|---|---|---|---|---|---|---|---|---|---|
| | | | PLAN REDRAWN | | | 16 | 01 | 16 | NAD |
| 16 | 01 | 16 | ADD PED GATES | NAD | BJW | | | | |
| 17 | 01 | 16 | SEAR/RAILFUSION | NAD | BJW | | | | |

REGION SOUTHERN
SUB. LEITHTON 332

SIGNALS AND COMMUNICATIONS HOMEWOOD
DES. BJH
10 JULY 2001
CH. JJ

HOUSE LAYOUT

PLAINFIELD, IL
135TH ST

LEI-011.44-13

DOT#260 575M

14

SIEMENS INDUSTRY INC

| | | | |
|---|---|---|---|
| DES.: NAD | DATE: 16/01/16 | JOB NO.: PICA10763 | |
| CKD.: BJW | ISSUE DATE: N/A | EST. NO.: XP-8047 | |
| DRN.: NAD | PLAN NO.: N/A | SHEET 15 OF 15 | |
| P TIME: 15:36 | P DATE: 17-FEB-2016 | CAD ID.: LEI-011.44-13 | |

SIEMENS INDUSTRY INC
LOUISVILLE DIVISION, LOUISVILLE, KY

lei-011.44-13.dgn
17-FEB-2016