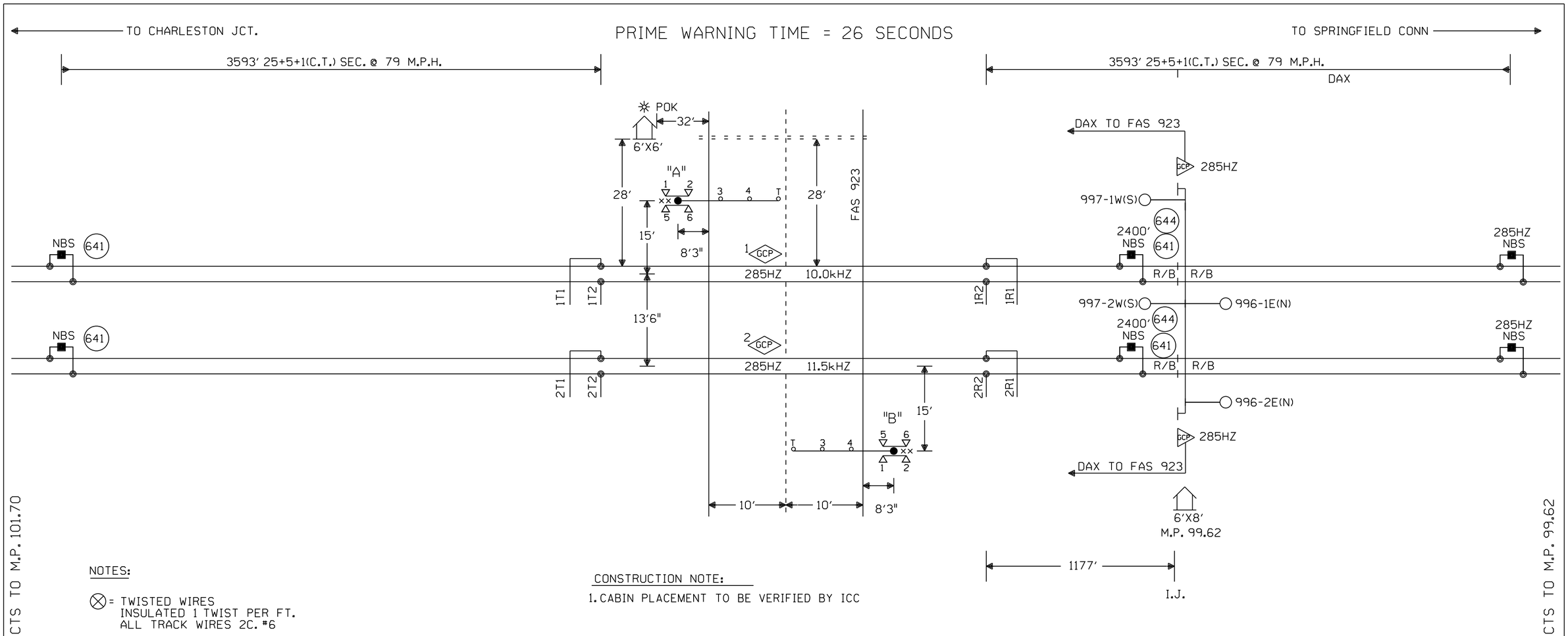

NOTES:

⊗ = TWISTED WIRES
INSULATED 1 TWIST PER FT.
ALL TRACK WIRES 2C. #6

TRANSMITTER AND RECEIVER LEADS TO BE SEPARATED BY AT LEAST 12" IN TRENCH, LENGTHS SHOULD NOT EXCEED MANUFACTURES RECOMMENDATION.

TOP OF FOUNDATION TO BE AT SAME ELEVATION AS THE SURFACE OF THE TRAVELED WAY & NO MORE THAN 4" ABOVE THE SURFACE OF THE GROUND.

ALL BUNGALOW WIRING TO BE #16 AWG FLEX UNLESS OTHERWISE SPECIFIED EXCEPT ALL GROUND WIRE TO BE #6 AWG FLEX OR LARGER.

ALL WIRING IN GATE MECHANISM TO BE #10 "AWG FLEX".

REFER TO UP STANDARD DWG FOR BUNGALOW GROUNDING.

PORTABLE GENERATOR EXTENSION CORD FOR 240V TO 240V IS PROVIDED AS WELL AS A 120V TO 240V ADAPTER.

ALL LIGHTS TO BE 12" ROUNDELS.

= = = = = = 4" X 40' CONDUIT

LIGHTS: LED LIGHTS

GATE A: 18'
GATE B: 18'

xx = BELL

TRK 1 ISLAND DISTANCE 120' MINIMUM 120' REQUIRED

TRK 2 ISLAND DISTANCE 120' MINIMUM 120' REQUIRED

PREFERRED ISLAND WIRE CONNECTIONS ARE A MINIMUM 50' FROM EDGE OF ROAD

CONSTRUCTION NOTE:

1. CABIN PLACEMENT TO BE VERIFIED BY ICC

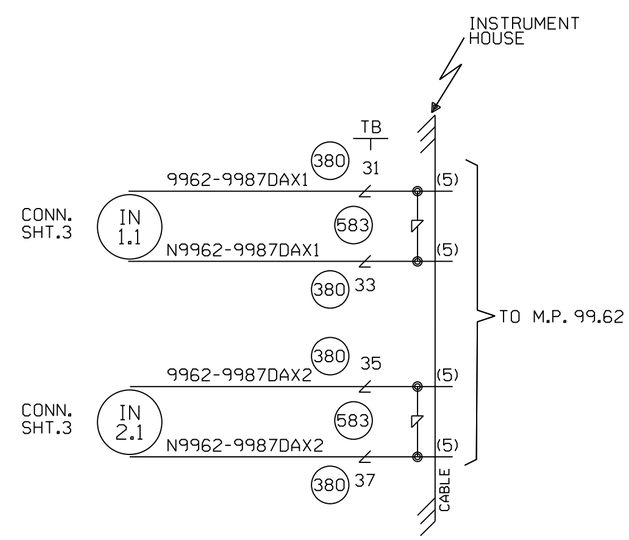

OFFSET AND ISLAND DISTANCES TO BE VERIFIED BY FIELD

W(S) ← ○ → E(N)

CABLE TABULATION

CABLE #5 7C#14 U.G.B.T. HOUSE TO M.P. 99.62

NEW SHEET

					Designed: 7/6/15	MODIFICATION LEVEL		CIRCUIT MODIFICATIONS ARE NOT TO BE MADE WITHOUT AUTHORITY FROM THE OFFICE OF SIGNAL DESIGN	Date: 7/6/15	UNION PACIFIC RAILROAD	Sh.: 1
					INSTALL FLS/GATES AND CWT AT M.P. 99.87 FAS 923	Q.A. LAST LEVEL CHECKED	DU		Des: JLP	WOLF LAKE, ILLINOIS FAS 923 CHESTER SUBDIVISION	DOT 445849B
						LAST LEVEL MOD THIS TYPICAL	DU		Chk: DMC		MP: 99.87
						LAST LEVEL BY DESIGNER	DU				
					Rec'd: WO#: 30696	CHANGED FROM TYPICAL?	Y		AFE: 30696	Office of AVP Engineering - Signal Omaha, Nebraska	ID: 12759987.1X
					IS: /DMC / /JLP/JTB	REV 01.24.11 4K 2TKUGTYP.1					

12759987.1X 1/29/2016 12:38:29 PM

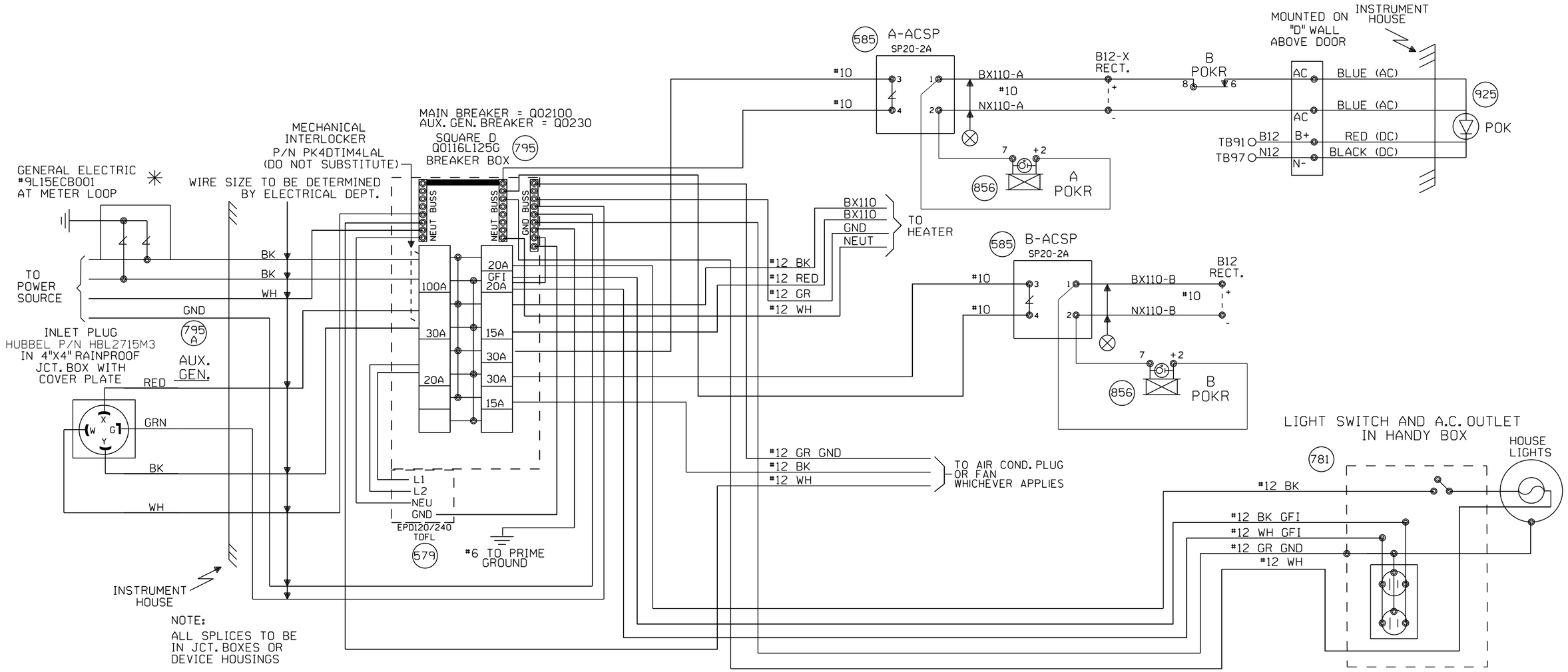

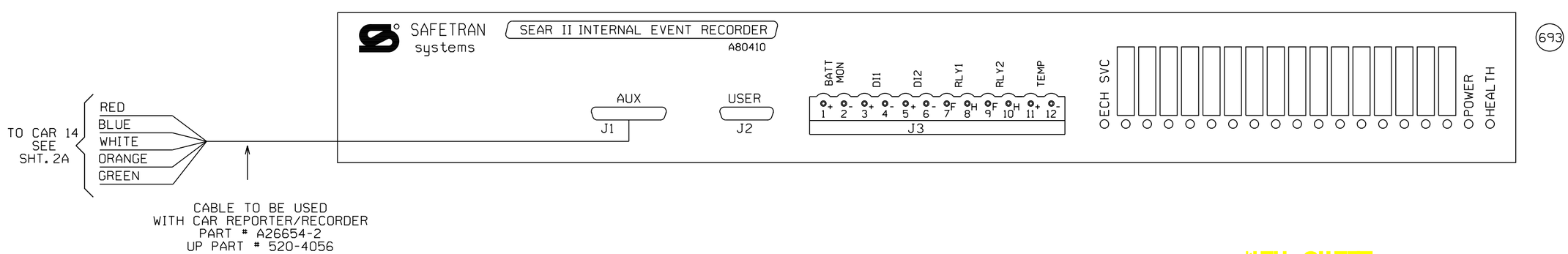

NEW SHEET

					Designed: 7/6/15 INSTALL FLS/GATES AND CWT AT M.P. 99.87 FAS 923 Rec#: W0#: 30696 IS: /NBT / /JLP/JTB	MODIFICATION LEVEL		CIRCUIT MODIFICATIONS ARE NOT TO BE MADE WITHOUT AUTHORITY FROM THE OFFICE OF SIGNAL DESIGN	Date: 7/6/15 Des: JLP Chk: NBT AFE: 30696	UNION PACIFIC RAILROAD WOLF LAKE, ILLINIOS FAS 923 CHESTER SUBDIVISION Office of AVP Engineering - Signal Omaha, Nebraska	Sh.: 2 DOT 445849B MP: 99.87 ID: 12759987.2X
						Q.A. LAST LEVEL CHECKED	DU				
						LAST LEVEL MOD THIS TYPICAL	DU				
						LAST LEVEL BY DESIGNER	DU				
						CHANGED FROM TYPICAL?	Y				
						REV 01.24.11 4K SEARAC.2					

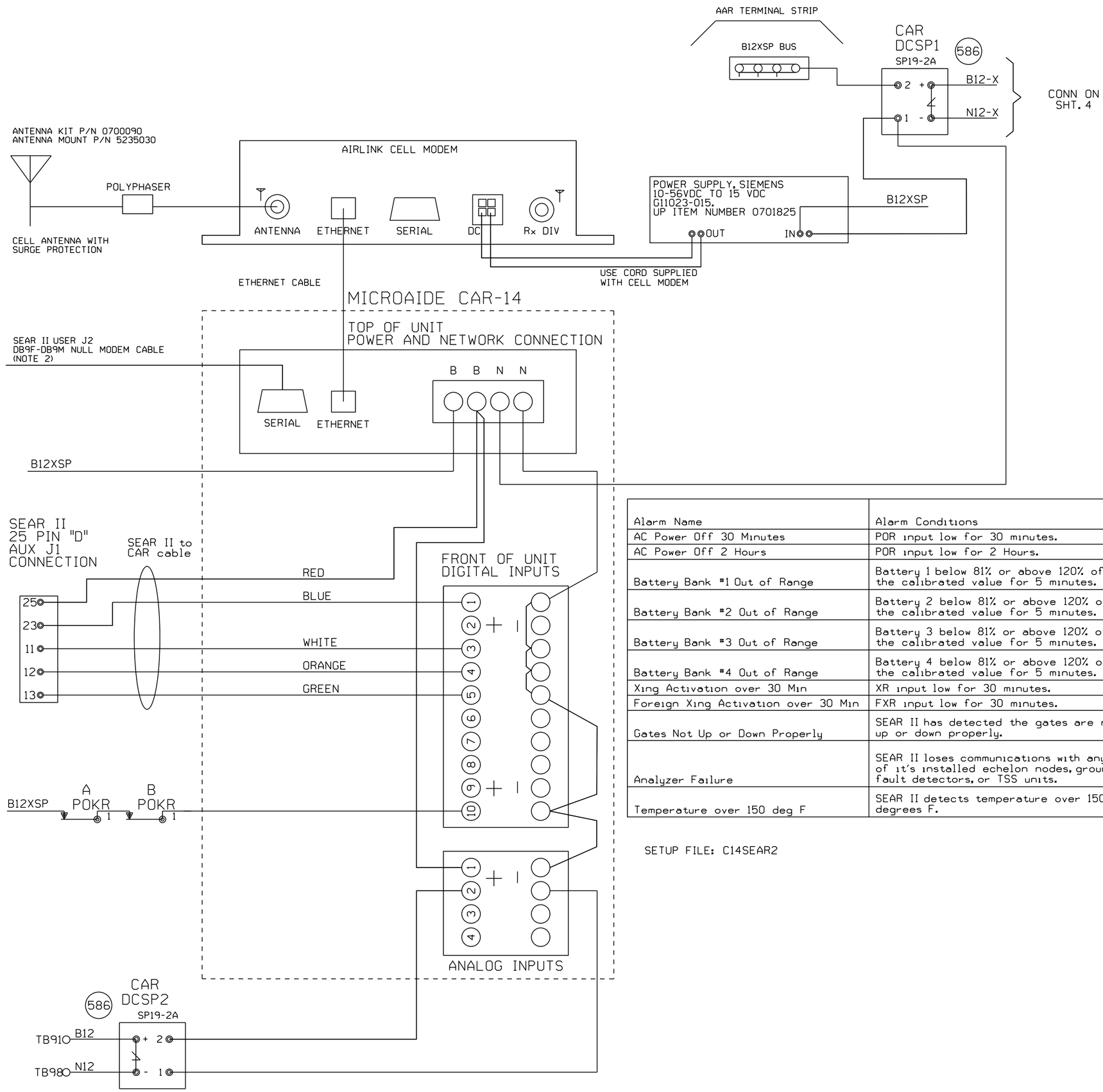

NOTE:
1) DO NOT JUMPER UNUSED INPUTS
2) THE CAR14 SERIAL PORT IS AVAILABLE TO ADD REMOTE CONNECTIVITY TO EXISTING LOGGING EQUIPMENT. USE NULL MODEM CABLE WITH SHIELDING DISCONNECTED AT ONE OR BOTH SIDES.

ANALOG INPUTS:
A1) B12X BATTERY BANK
A2) B12 BATTERY BANK

DIGITAL INPUTS
D1) XR (BLUE WIRE)
D3) ANALYZER FAILURE (WHITE WIRE)
D4) HIGH TEMPERATURE (ORANGE WIRE)
D5) GATES NOT UP OR DOWN PROPERLY (GREEN WIRE)
D10) POWER OFF INDICATION

Alarm Name	Alarm Conditions	Alarm Clearing Conditions	Cleared by Maintainer Mode?
AC Power Off 30 Minutes	POR input low for 30 minutes.	POR input high for 5 minutes.	No
AC Power Off 2 Hours	POR input low for 2 Hours.	POR input high for 5 minutes.	No
Battery Bank #1 Out of Range	Battery 1 below 81% or above 120% of the calibrated value for 5 minutes.	Battery 1 within acceptable range for 5 minutes.	No
Battery Bank #2 Out of Range	Battery 2 below 81% or above 120% of the calibrated value for 5 minutes.	Battery 2 within acceptable range for 5 minutes.	No
Battery Bank #3 Out of Range	Battery 3 below 81% or above 120% of the calibrated value for 5 minutes.	Battery 3 within acceptable range for 5 minutes.	No
Battery Bank #4 Out of Range	Battery 4 below 81% or above 120% of the calibrated value for 5 minutes.	Battery 4 within acceptable range for 5 minutes.	No
Xing Activation over 30 Min	XR input low for 30 minutes.	XR input high for 10 seconds.	Yes
Foreign Xing Activation over 30 Min	FXR input low for 30 minutes.	FXR input high for 10 seconds.	Yes
Gates Not Up or Down Properly	SEAR II has detected the gates are not up or down properly.	SEAR II has detected the gates are up or down properly.	No
Analyzer Failure	SEAR II loses communications with any of it's installed echelon nodes, ground fault detectors, or TSS units.	SEAR II has recovered after an analyzer failure alarm.	No
Temperature over 150 deg F	SEAR II detects temperature over 150 degrees F.	SEAR II sensor detects temperature is OK after a High-Temp alarm.	No

SETUP FILE: C14SEAR2

NEW SHEET

Designed: 7/6/15
INSTALL FLS/GATES AND CWT AT M.P. 99.87 FAS 923
Rec*: WO*: 30696
IS: / /NBT / /JLP/JTB

MODIFICATION LEVEL	
Q.A. LAST LEVEL CHECKED	DU
LAST LEVEL MOD THIS TYPICAL	DU
LAST LEVEL BY DESIGNER	DU
CHANGED FROM TYPICAL?	Y

REV 01.24.11 4K ACDCCAR14SII.3

CIRCUIT MODIFICATIONS ARE NOT TO BE MADE WITHOUT AUTHORITY FROM THE OFFICE OF SIGNAL DESIGN

Date: 7/6/15
Des: JLP
Chk: NBT
AFE: 30696

UNION PACIFIC RAILROAD
WOLF LAKE, ILLINIOS
FAS 923
CHESTER SUBDIVISION
Office of AVP Engineering - Signal Omaha, Nebraska

Sh.: 2A
DOT 445849B
MP: 99.87
ID: 12759987.2AX

12759987.2AX 1/29/2016 12:38:31 PM

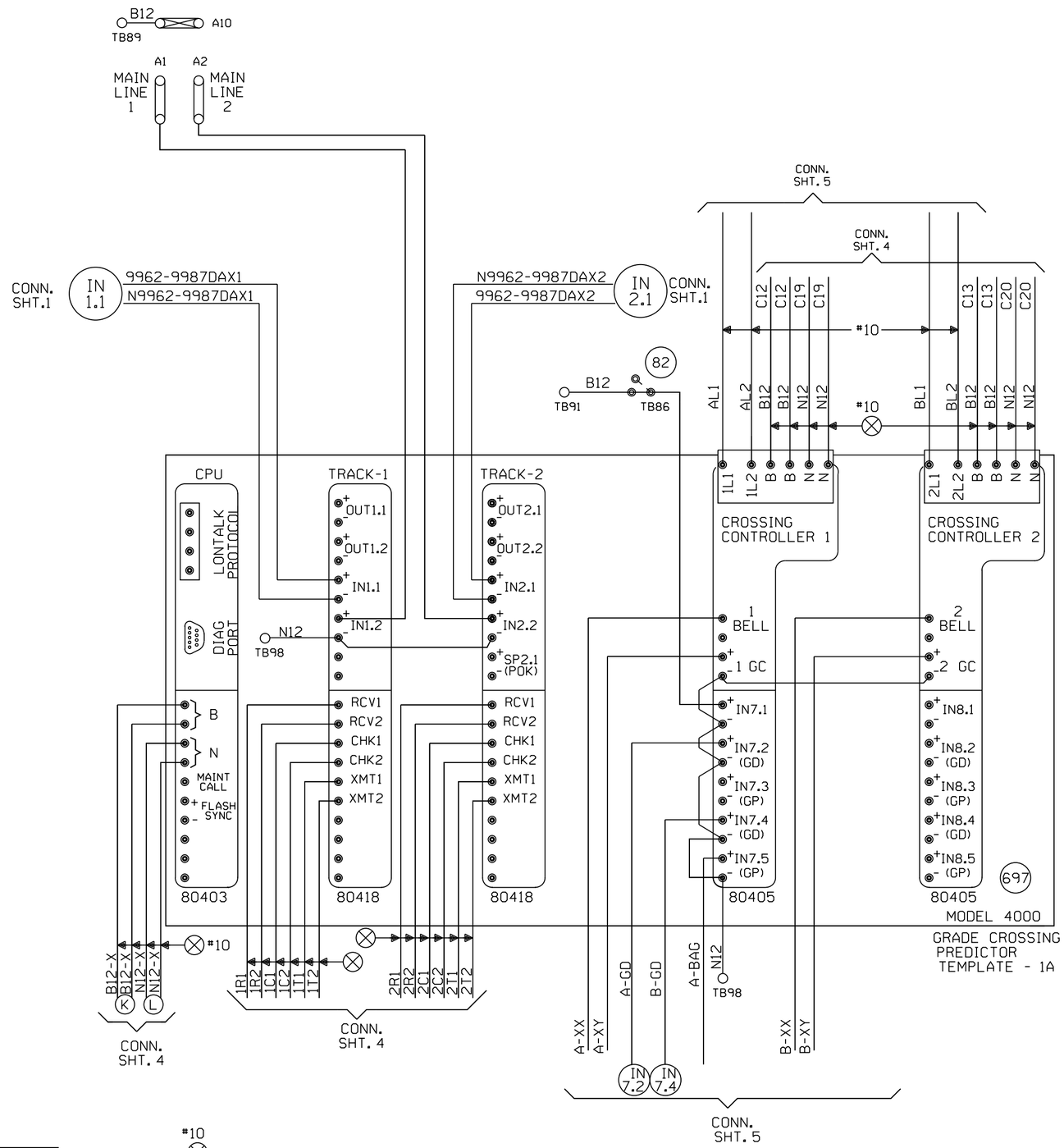

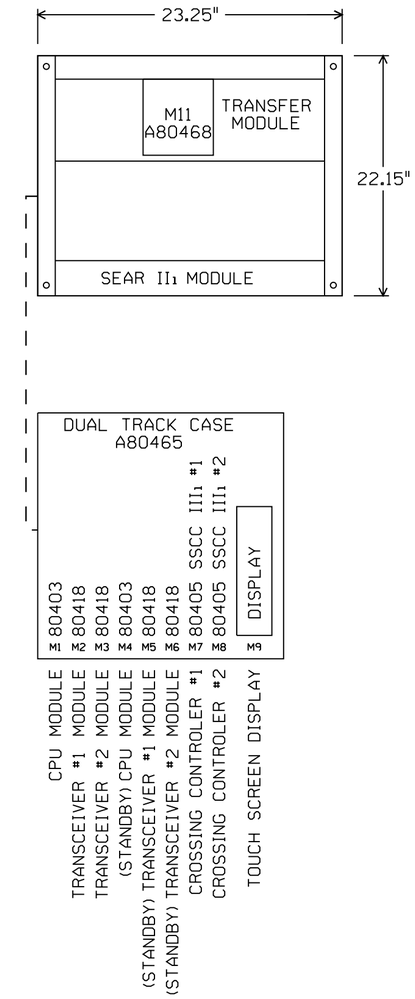

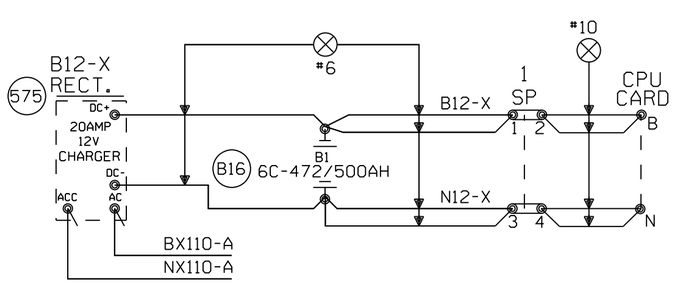

"Mf" FREQUENCY (HZ)	MAXIMUM TRANSMIT WIRE LENGTH (FEET)
86	100
114	125
156	150
211	200
285-970	250

NOTE:
EACH TRANSMITTER TO RAIL WIRE FROM XMT1 AND XMT2 MUST NOT EXCEED THE MAXIMUM LENGTH SPECIFIED IN THE TABLE SHOWN. THE RECEIVER WIRE LENGTH IS NOT CRITICAL. DOES NOT APPLY TO 6 TRACK WIRE APPLICATION.

NEW SHEET

Designed: 7/6/15
INSTALL FLS/GATES AND CWT AT M.P. 99.87 FAS 923
Rec*:
IS:
WO*: 30696 /NBT
/ JLP/JTB

MODIFICATION LEVEL	
O. A. LAST LEVEL CHECKED	DU
LAST LEVEL MOD THIS TYPICAL	DU
LAST LEVEL BY DESIGNER	DU
CHANGED FROM TYPICAL?	Y

REV 01.24.11 4K 2TKGF.3

CIRCUIT MODIFICATIONS ARE NOT TO BE MADE WITHOUT AUTHORITY FROM THE OFFICE OF SIGNAL DESIGN

Date: 7/6/15
Des: JLP
Chk: NBT
AFE: 30696

UNION PACIFIC RAILROAD
WOLF LAKE, ILLINIOS
FAS 923
CHESTER SUBDIVISION
Office of AVP Engineering - Signal Omaha, Nebraska

Sh.: 3
DOT 445849B
MP: 99.87
ID: 12759987.3X

12759987.3X 1/29/2016 12:38:36 PM

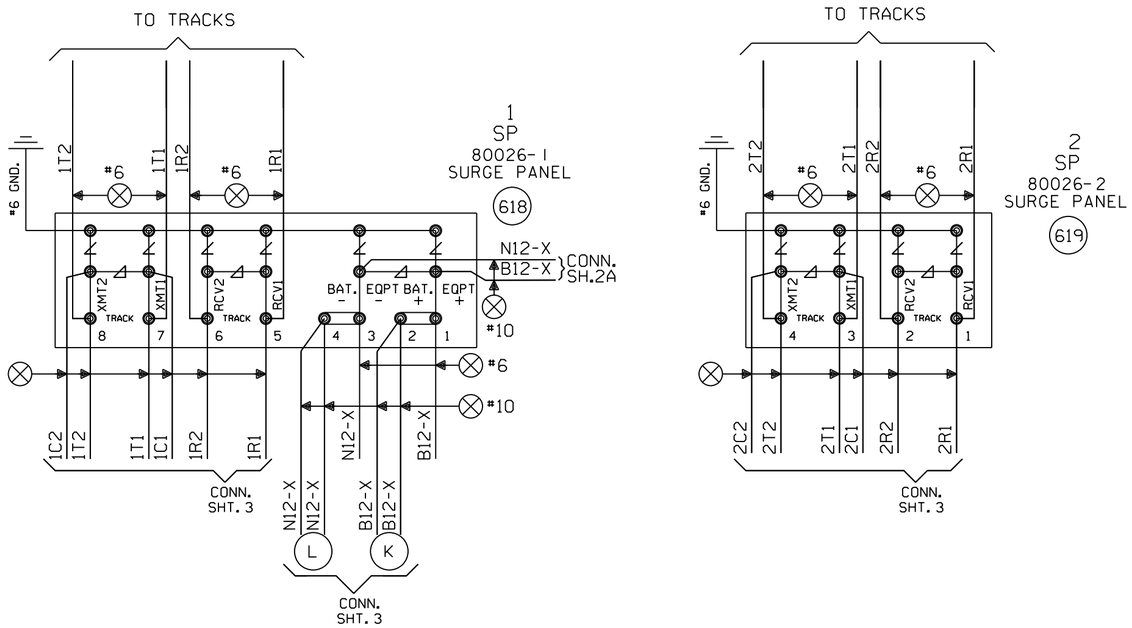

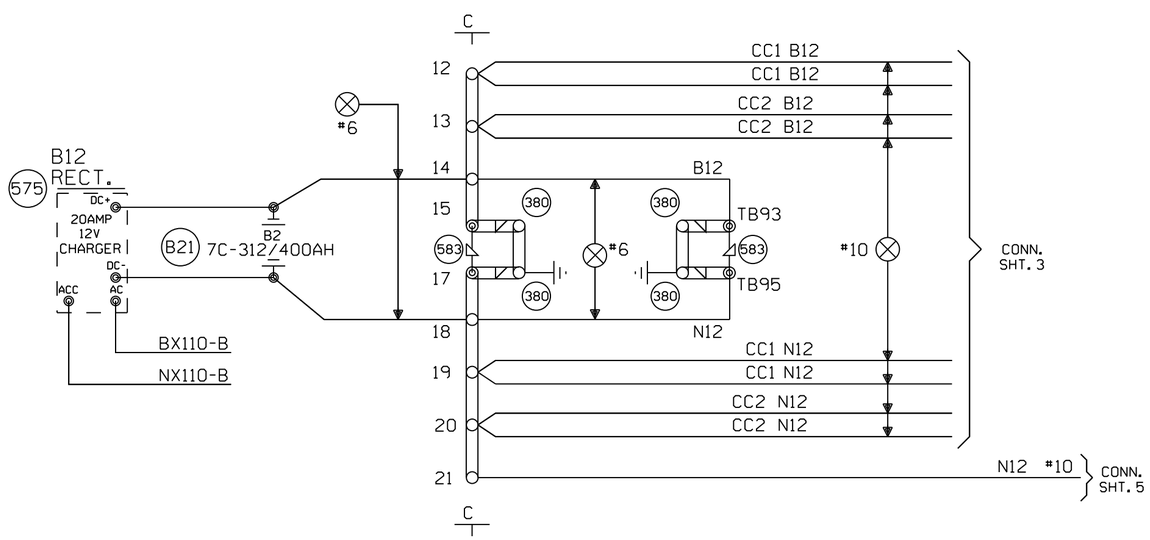

NEW SHEET

					Designed: 7/6/15 INSTALL FLS/GATES AND CWT AT M.P. 99.87 FAS 923 Rec*: WO*: 30696 /NBT IS: / / JLP/JTB	MODIFICATION LEVEL Q.A. LAST LEVEL CHECKED DU LAST LEVEL MOD THIS TYPICAL DU LAST LEVEL BY DESIGNER DU CHANGED FROM TYPICAL? Y REV 01.24.11 4K 4TKSPGFC.4	CIRCUIT MODIFICATIONS ARE NOT TO BE MADE WITHOUT AUTHORITY FROM THE OFFICE OF SIGNAL DESIGN	Date: 7/6/15 Des: JLP Chk: NBT AFE: 30696	UNION PACIFIC RAILROAD WOLF LAKE, ILLINIOS FAS 923 CHESTER SUBDIVISION Office of AVP Engineering - Signal Omaha, Nebraska	Sh.: 4 DOT 445849B MP: 99.87 ID: 12759987.4X

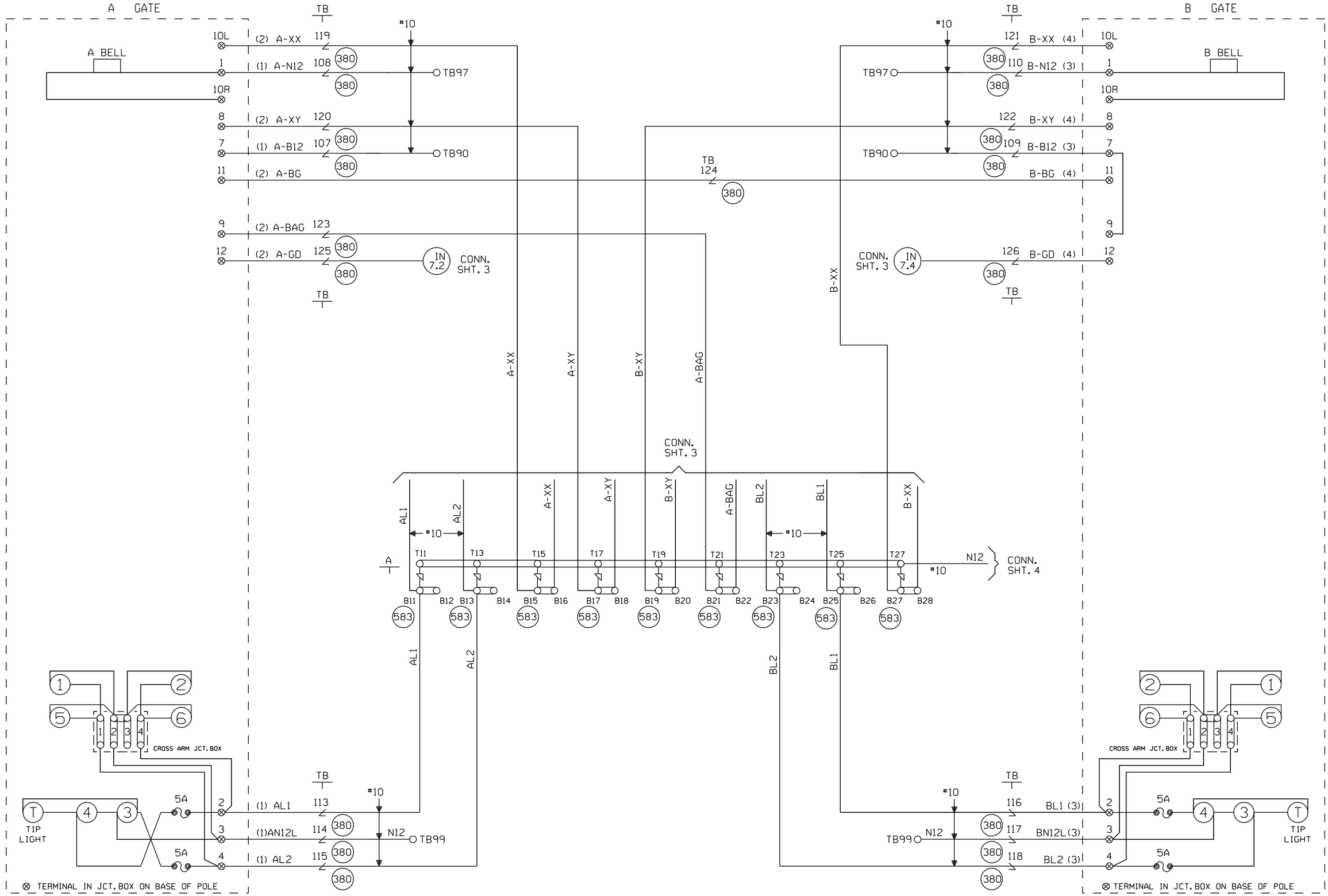

CABLE TABULATION

CABLE NO. 1 5C. NO.6 U.G.B.T. TO GATE A
CABLE NO. 2 7C. NO.14 U.G.B.T. TO GATE A
CABLE NO. 3 5C. NO.6 U.G.B.T. TO GATE B
CABLE NO. 4 7C. NO.14 U.G.B.T. TO GATE B

NEW SHEET

Designed: 7/6/15
INSTALL FLS/GATES AND CWT AT M.P. 99.87 FAS 923
Rec*: IS:
WO*: 30696 /NBT / /JLP/JTB

MODIFICATION LEVEL	
O.A. LAST LEVEL CHECKED	DU
LAST LEVEL MOD THIS TYPICAL	DU
LAST LEVEL BY DESIGNER	DU
CHANGED FROM TYPICAL?	Y

REV 01.24.11 4K GFSLTYP.5

CIRCUIT MODIFICATIONS ARE NOT TO BE MADE WITHOUT AUTHORITY FROM THE OFFICE OF SIGNAL DESIGN

Date: 7/6/15
Des: JLP
Chk: NBT
AFE: 30696

UNION PACIFIC RAILROAD
WOLF LAKE, ILLINIOS
FAS 923
CHESTER SUBDIVISION
Office of AVP Engineering - Signal Omaha, Nebraska

Sh.: 5
DOT 445849B
MP: 99.87
ID: 12759987.5X

12759987.5X 1/29/2016 12:38:42 PM

WCH 3593-E

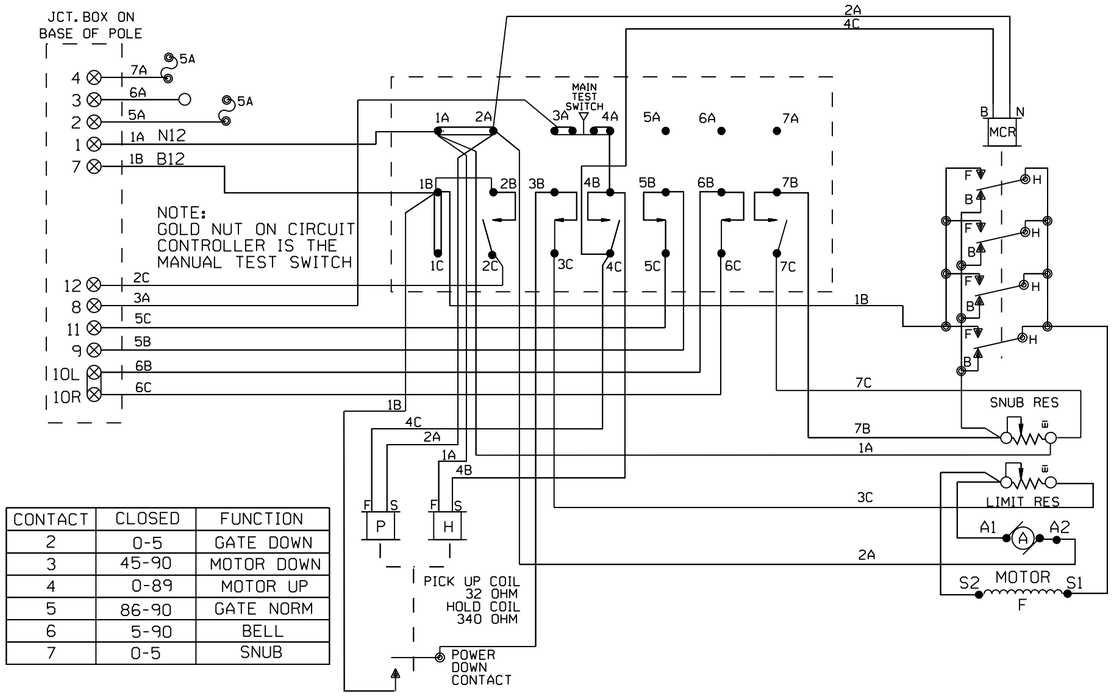

CONTACT	CLOSED	FUNCTION
2	0-5	GATE DOWN
3	45-90	MOTOR DOWN
4	0-89	MOTOR UP
5	86-90	GATE NORM
6	5-90	BELL
7	0-5	SNUB

WCH 3597-E

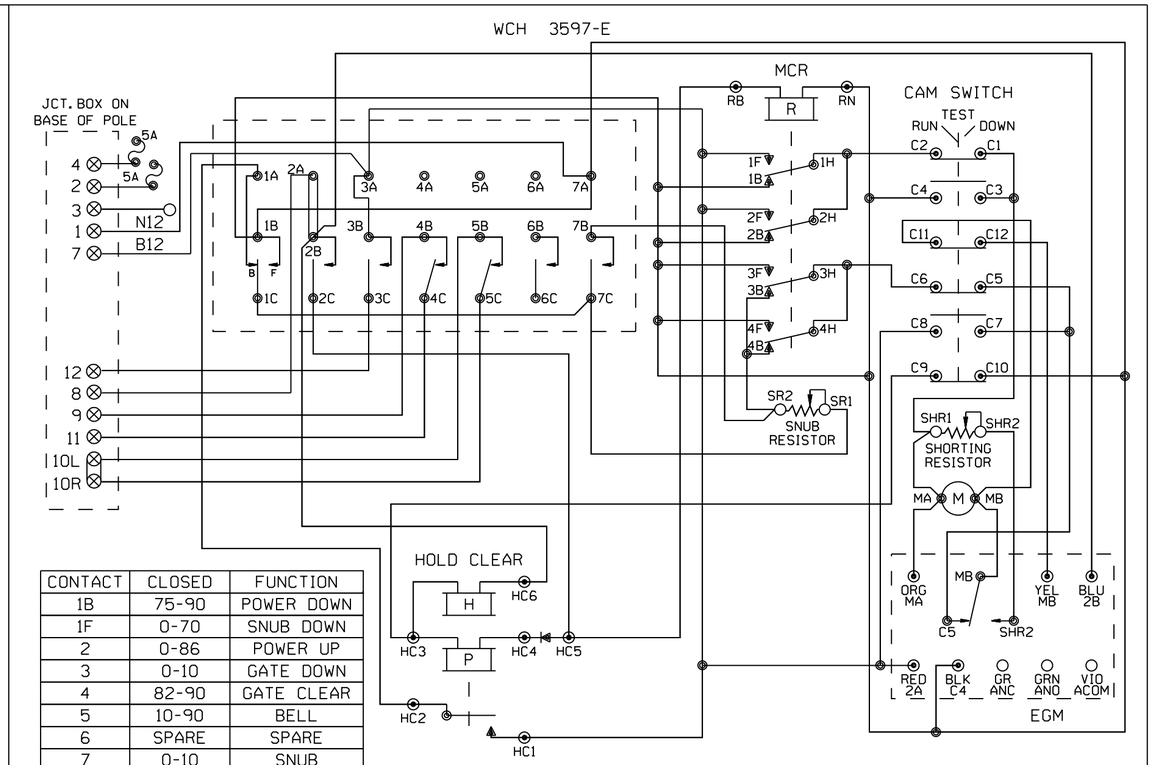

CONTACT	CLOSED	FUNCTION
1B	75-90	POWER DOWN
1F	0-70	SNUB DOWN
2	0-86	POWER UP
3	0-10	GATE DOWN
4	82-90	GATE CLEAR
5	10-90	BELL
6	SPARE	SPARE
7	0-10	SNUB

WCH 3597-RB

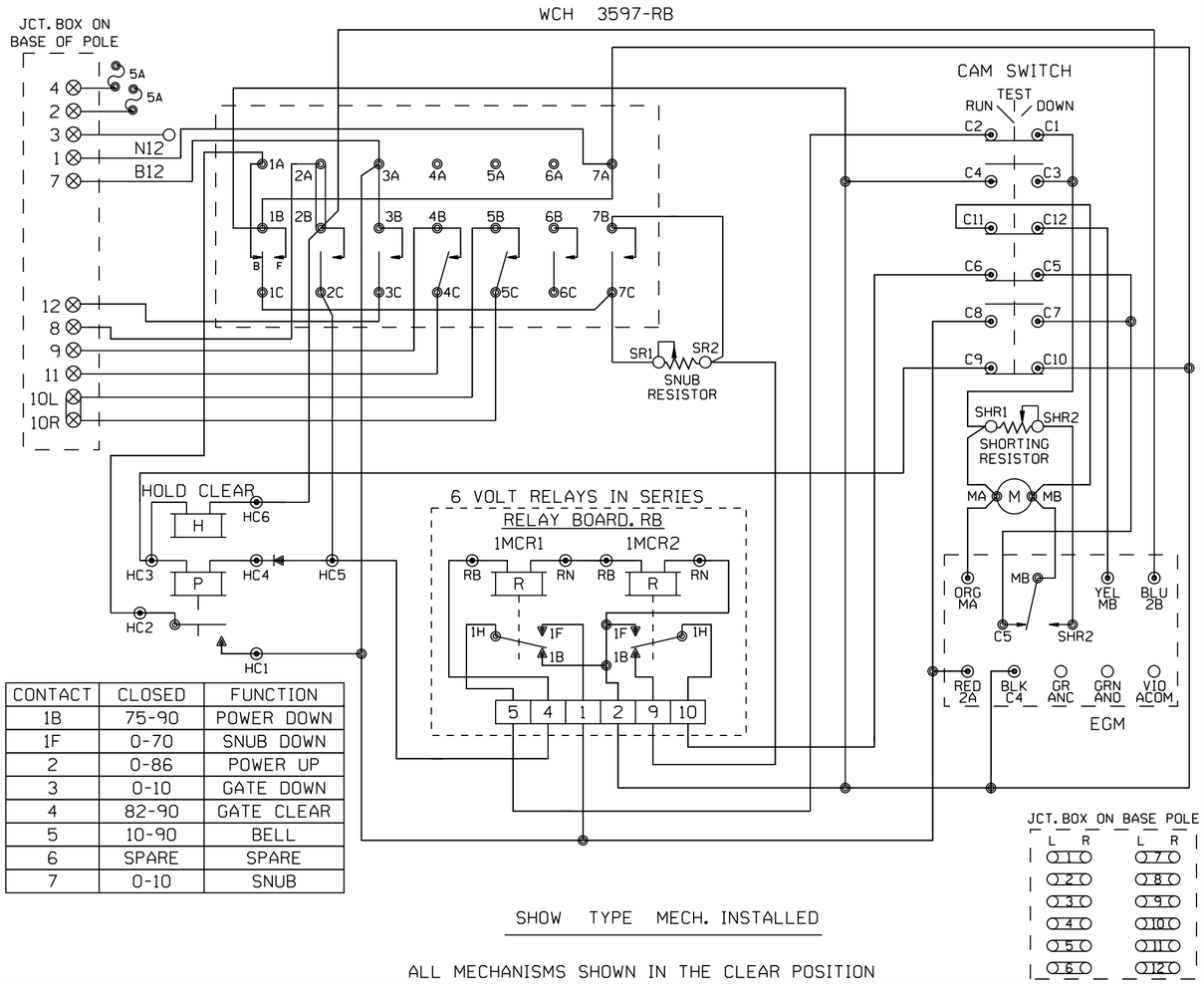

CONTACT	CLOSED	FUNCTION
1B	75-90	POWER DOWN
1F	0-70	SNUB DOWN
2	0-86	POWER UP
3	0-10	GATE DOWN
4	82-90	GATE CLEAR
5	10-90	BELL
6	SPARE	SPARE
7	0-10	SNUB

SHOW TYPE MECH. INSTALLED

ALL MECHANISMS SHOWN IN THE CLEAR POSITION

SAFETRAN S-60

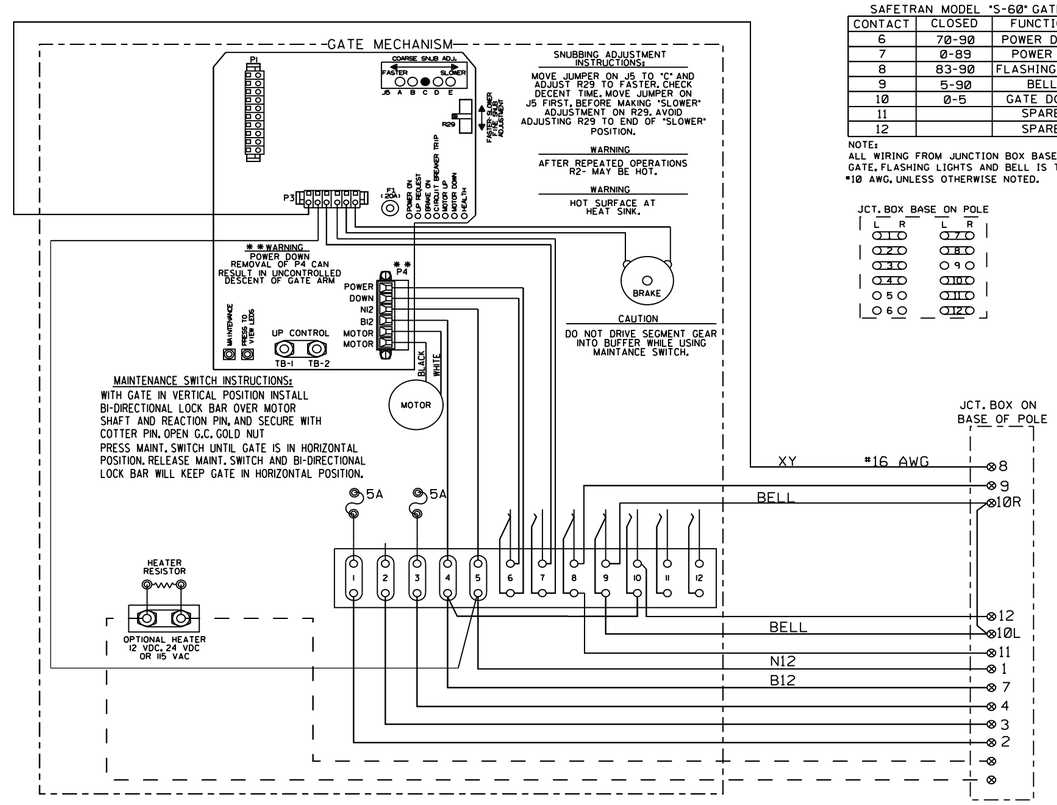

SAFETRAN MODEL "S-60" GATE

CONTACT	CLOSED	FUNCTION
6	70-90	POWER DOWN
7	0-89	POWER UP
8	83-90	FLASHING LGT.
9	5-90	BELL
10	0-5	GATE DOWN
11		SPARE
12		SPARE

NOTE:
ALL WIRING FROM JUNCTION BOX BASE TO GATE, FLASHING LIGHTS AND BELL IS TO BE #10 AWG, UNLESS OTHERWISE NOTED.

JCT. BOX BASE ON POLE

NEW SHEET

Designed:	7/6/15
INSTALL FLS/GATES AND CWT AT M.P. 99.87 FAS 923	
Rec*:	
IS:	
WO*:	30696
	/NBT
	/JLP/JTB

MODIFICATION LEVEL	
O.A. LAST LEVEL CHECKED	DU
LAST LEVEL MOD THIS TYPICAL	DU
LAST LEVEL BY DESIGNER	DU
CHANGED FROM TYPICAL?	N
REV 01.24.11 4K GWIRING.7	

CIRCUIT MODIFICATIONS ARE NOT TO BE MADE WITHOUT AUTHORITY FROM THE OFFICE OF SIGNAL DESIGN

Date:	7/6/15
Des:	JLP
Chk:	NBT
AFE:	30696

UNION PACIFIC RAILROAD

WOLF LAKE, ILLINIOS
FAS 923
CHESTER SUBDIVISION

Office of AVP Engineering - Signal — Omaha, Nebraska

Sh.:	6
DOT	445849B
MP:	99.87
ID:	12759987.6X

12759987.6X 1/29/2016 12:38:44 PM

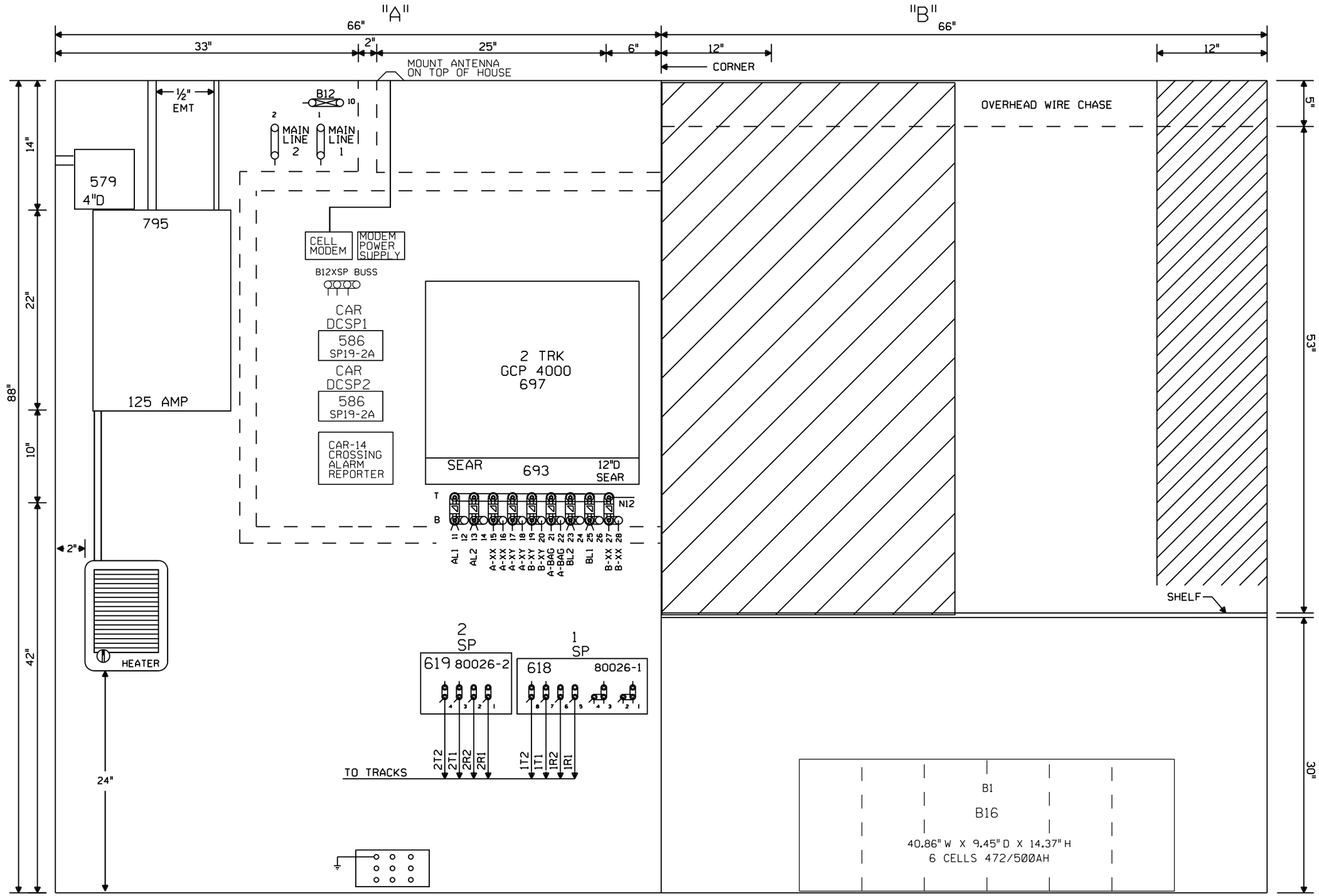

6X6 WAYSIDE/XING HOUSE WITH BLOWER U.P. PART#520-????

NOTE: ALL DIMENSIONS SHOWN ARE APPROXIMATE.

NEW SHEET

Designed: 7/6/15
INSTALL FLS/GATES AND CWT AT M.P. 99.87 FAS 923
Rec'd: ISH
WO#: 30696 /NBT /JLP/JTB

MODIFICATION LEVEL	
O.A. LAST LEVEL CHECKED	DU
LAST LEVEL MOD THIS TYPICAL	DU
LAST LEVEL BY DESIGNER	DU
CHANGED FROM TYPICAL?	Y

REV 01.24.11 4K 4TKGFC.8

CIRCUIT MODIFICATIONS ARE NOT TO BE MADE WITHOUT AUTHORITY FROM THE OFFICE OF SIGNAL DESIGN

Date: 7/6/15
Des: JLP
Chk: NBT
AFE: 30696

UNION PACIFIC RAILROAD
WOLF LAKE, ILLINIOS
FAS 923
CHESTER SUBDIVISION
Office of AVP Engineering - Signal Omaha, Nebraska

Sh.: 7
DOT 445849B
MP: 99.87
ID: 12759987.7X

12759987.7X 1/29/2016 12:38:47 PM

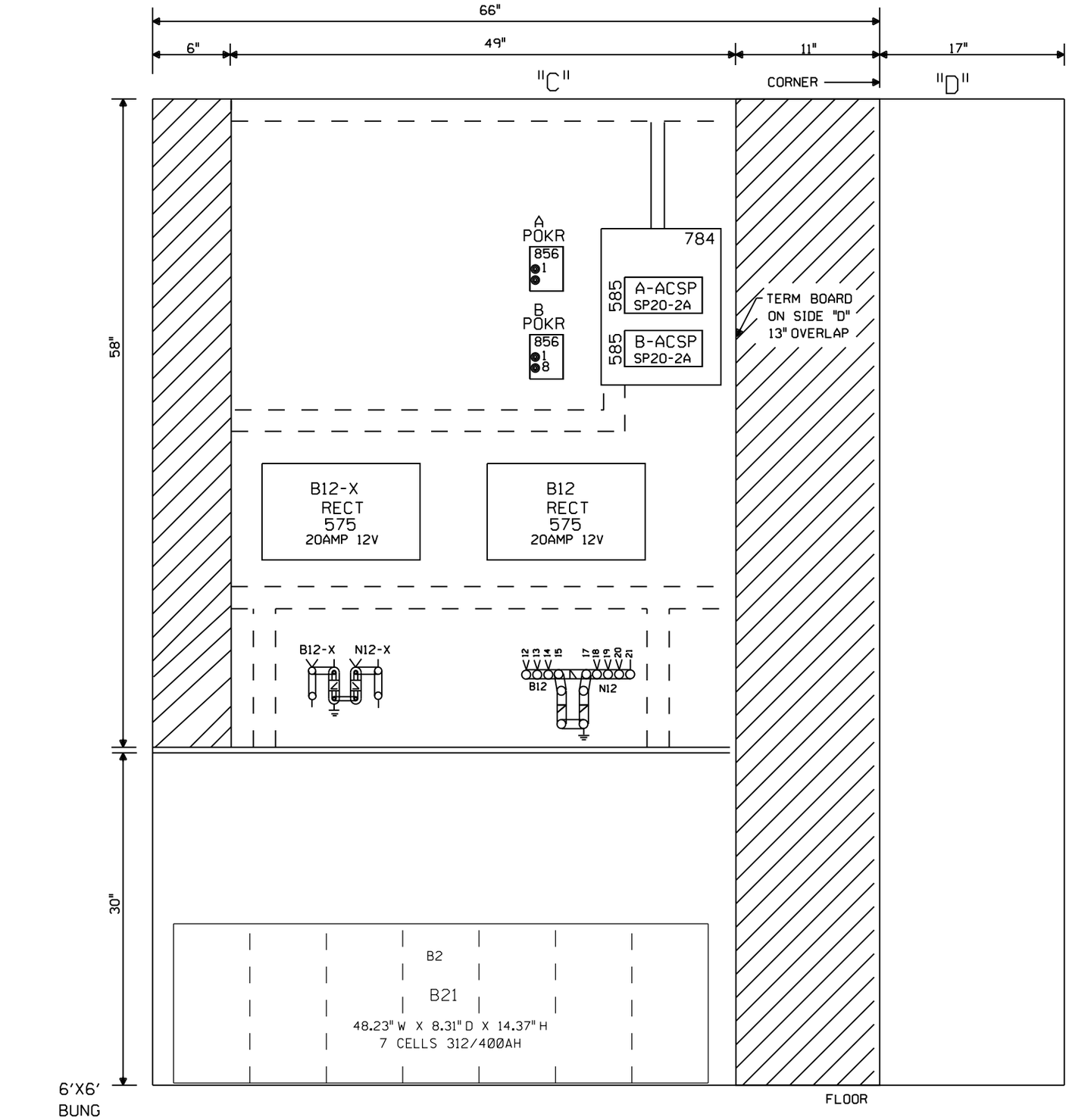

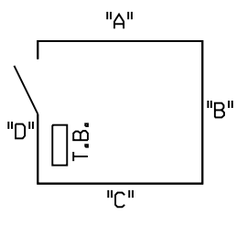

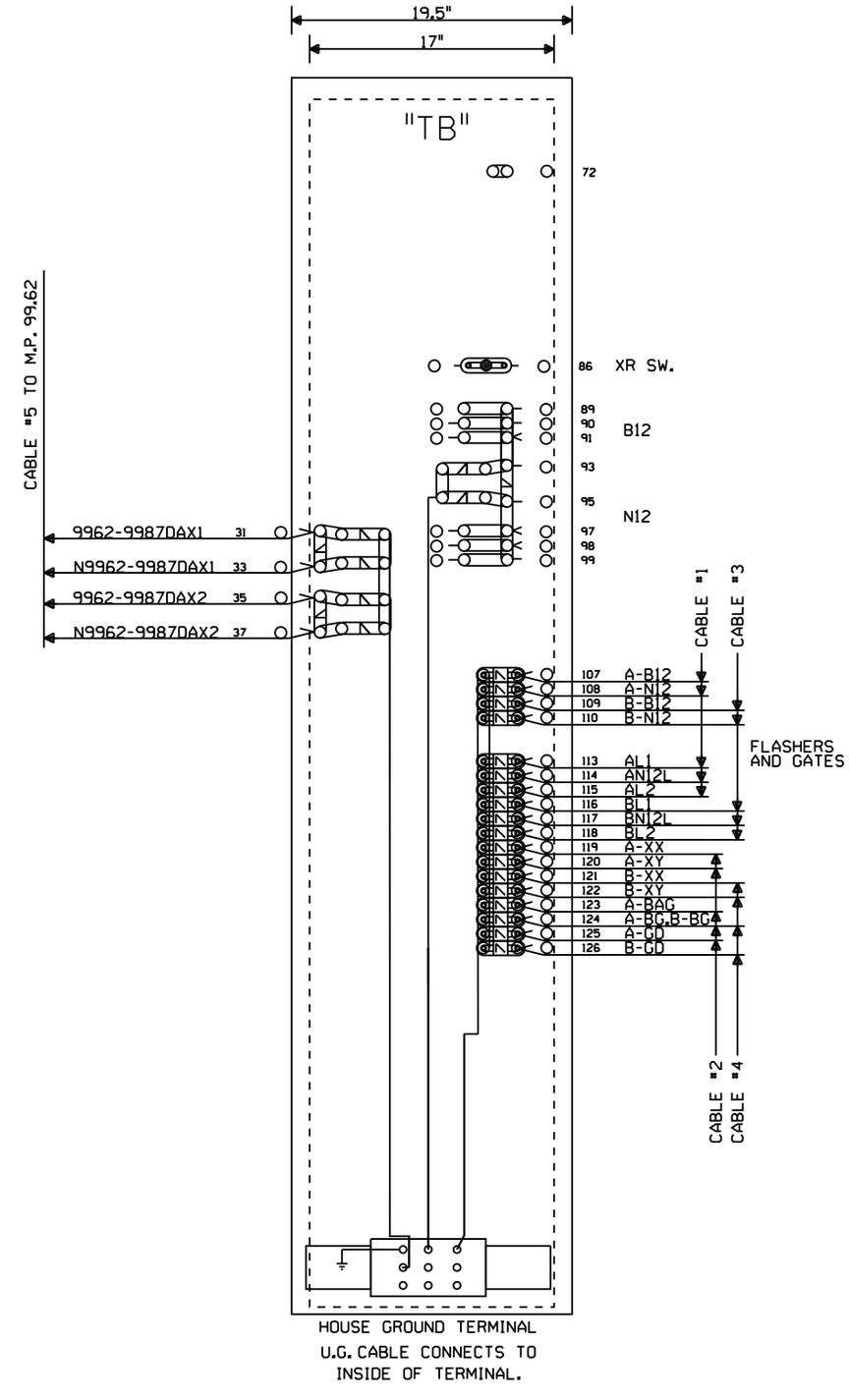

NOTE: NO TEST LINKS TO BE INSTALLED WITH CROSSING LIGHTING OR GATE MECH CIRCUITRY

NOTE: ALL DIMENSIONS SHOWN ARE APPROXIMATE.

NEW SHEET

					Designed: 7/6/15 INSTALL FLS/GATES AND CWT AT M.P. 99.87 FAS 923 Rec'd: 15: WO#: 30696 /NBT /JLP/JTB	MODIFICATION LEVEL		CIRCUIT MODIFICATIONS ARE NOT TO BE MADE WITHOUT AUTHORITY FROM THE OFFICE OF SIGNAL DESIGN	Date: 7/6/15	UNION PACIFIC RAILROAD	Sh.: 8
						O. A. LAST LEVEL CHECKED	DU		Des: JLP	WOLF LAKE, ILLINIOS FAS 923 CHESTER SUBDIVISION	DOT 445849B
						LAST LEVEL MOD THIS TYPICAL	DU		Chk: NBT		MP: 99.87
						LAST LEVEL BY DESIGNER	DU		AFE: 30696	Office of AVP Engineering - Signal Omaha, Nebraska	ID: 12759987.8X
						CHANGED FROM TYPICAL?	Y				
						Rev 01.24.11 4K GFC.9					

12759987.8X 1/29/2016 12:38:50 PM