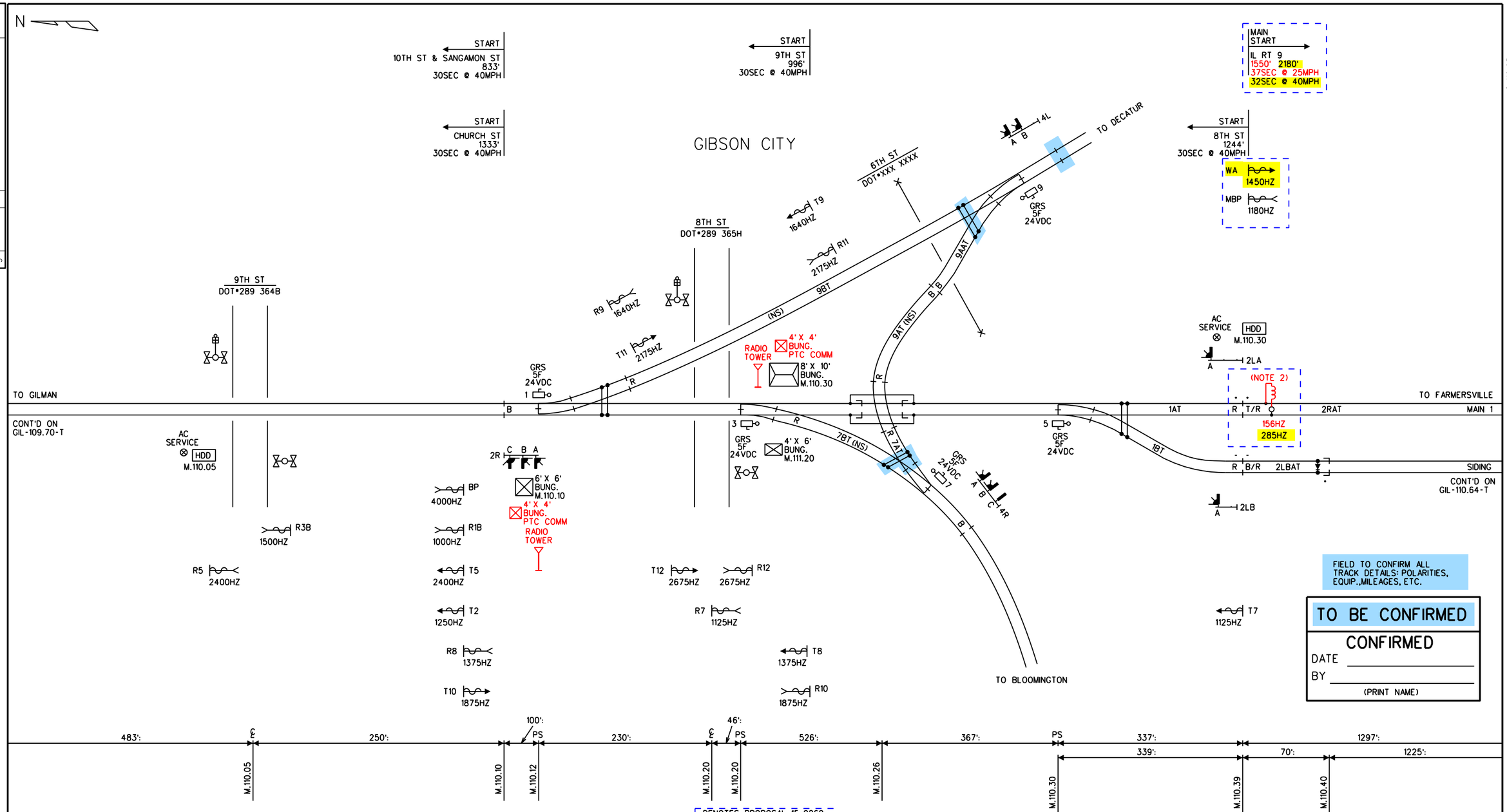

FIELD TO CONFIRM ALL TRACK DETAILS: POLARITIES, EQUIP., MILEAGES, ETC.

TO BE CONFIRMED

CONFIRMED
DATE _____
BY _____
(PRINT NAME)

DENOTES PROPOSAL 15-0260
REVISION 03/09/15

NOTES

1) ALL APPROACH DISTANCES MEASURED FROM TRACK LEADS

2) SHUNT TO BE LOCATED AT JOINT

DENOTES MULTIFREQUENCY NARROW-BAND SHUNT •62775-1543 WITH SIMULATED TRACK INDUCTOR BV617-2200

DENOTES MULTIFREQUENCY NARROW-BAND SHUNT •62775-1543 WITH SIMULATED TRACK INDUCTOR BV617-600

SELECTED SIMULATED TRACK INDUCTOR BV617 IS BASED ON LOCATION PLAN DISTANCE MEASUREMENT. THIS DISTANCE MAY DIFFER FROM ACTUAL INSTALLATION. ENSURE THE SELECTED UNIT MATCH INSTALLATION.

DENOTES RING 10 RECTIFIER

SII 03 SEP 2015

PROPOSED
DESIGN NO. 15-0260
RED-IN YELLOW-OUT

AS INSTALLED
DATE _____
BY _____
(PRINT NAME)

SII 06 APR 2015

PROPOSED
DESIGN NO. PTC-023
RED-IN YELLOW-OUT

AS INSTALLED
DATE _____
BY _____
(PRINT NAME)

PROPOSED D	M	Y	REVISIONS	D	C	COMPLETED D	M	Y	C
			PLAN REDRAWN			06	04	15	JCM
06	04	15	PTC UPGRADE	JCM	SIA				
03	09	15	M.110.71 CWT UPGRADE	NAD	BJW				

REGION SOUTHERN
SUB. GILMAN 349
SIGNALS AND COMMUNICATIONS HOMEWOOD
DES.
CH.
TRACK PLAN
M.110.05 TO M.110.40

GIL-110.05-T

gil-110.05-t.dgn
10-FEB-2016

REVISIONS				
NO.	DATE	BY	DESCRIPTION	APP. BY
1				
2				
3				
4				
5				

SIEMENS INDUSTRY INC

DES.: JCM	DATE: 06/04/15	JOB NO.: JXXE04838	
CKD.: SIA	ISSUE DATE: N/A	EST. NO.: QDE000320	
DRN.: JCM	PLAN NO.: N/A	SHEET 1 OF 1	
P. TIME: 08:37	P. DATE: $$PLOT_DATE	CAD ID.: GIL-110.05-T	

SIEMENS INDUSTRY INC
LOUISVILLE DIVISION, LOUISVILLE, KY

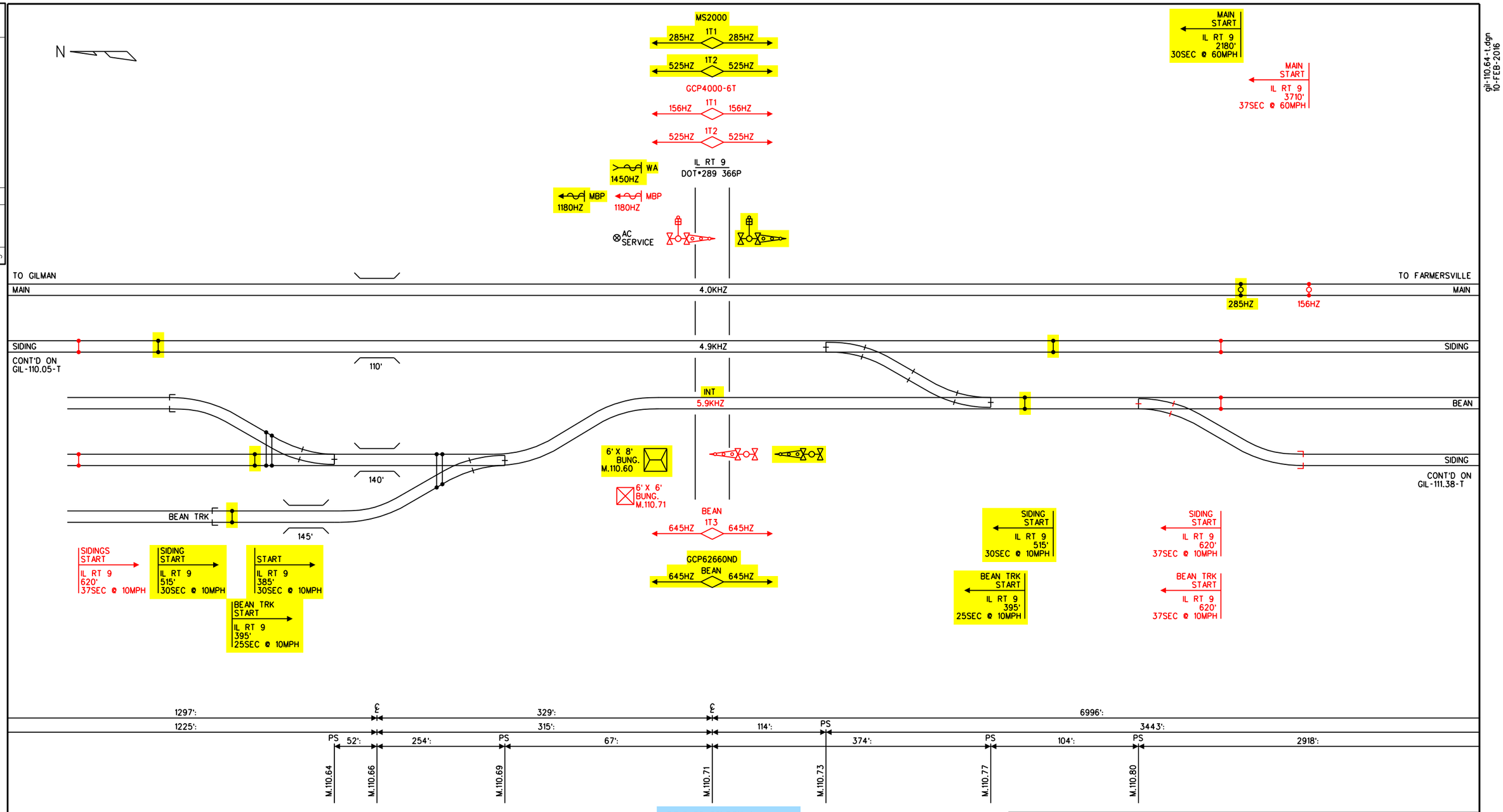

gil-110.64-t.dgn
10-FEB-2016

REVISIONS			
NO.	DATE	BY	DESCRIPTION	APP. BY
1				
2				
3				
4				
5				

NOTES

1) ALL APPROACH DISTANCES MEASURED FROM TRACK LEADS

DENOTES •6 HARDWIRE SHUNT

DENOTES MULTIFREQUENCY NARROW-BAND SHUNT •62775-1543

FIELD TO CONFIRM ALL TRACK DETAILS: POLARITIES, EQUIP.,MILEAGES, ETC.

TO BE CONFIRMED

CONFIRMED
DATE _____
BY _____
(PRINT NAME)

SII03 SEP 2015

PROPOSED
DESIGN NO. 15-0260
RED-IN YELLOW-OUT

AS INSTALLED
DATE _____
BY _____
(PRINT NAME)

PROPOSED D	M	Y	REVISIONS	D	C	COMPLETED D	M	Y	C
			PLAN REDRAWN			06	04	15	JCM
03	09	15	M.110.71 CWT UPGRADE	NAD	BJW				

REGION SOUTHERN
SUB. GILMAN 349
SIGNALS AND COMMUNICATIONS HOMEWOOD
DES.
CH.
TRACK PLAN
M.110.64 TO M.110.80

GIL-110.64-T

SIEMENS INDUSTRY INC

DES.: JCM	DATE: 06/04/15	JOB NO.: JXXE04838	
CKD.: SIA	ISSUE DATE: N/A	EST. NO.: QDE000320	
DRN.: JCM	PLAN NO.: N/A	SHEET 1 OF 1	
P. TIME: 08:37	P. DATE: $$PLOT_DATE	CAD ID.: GIL-110.64-T	

SIEMENS INDUSTRY INC
LOUISVILLE DIVISION, LOUISVILLE, KY

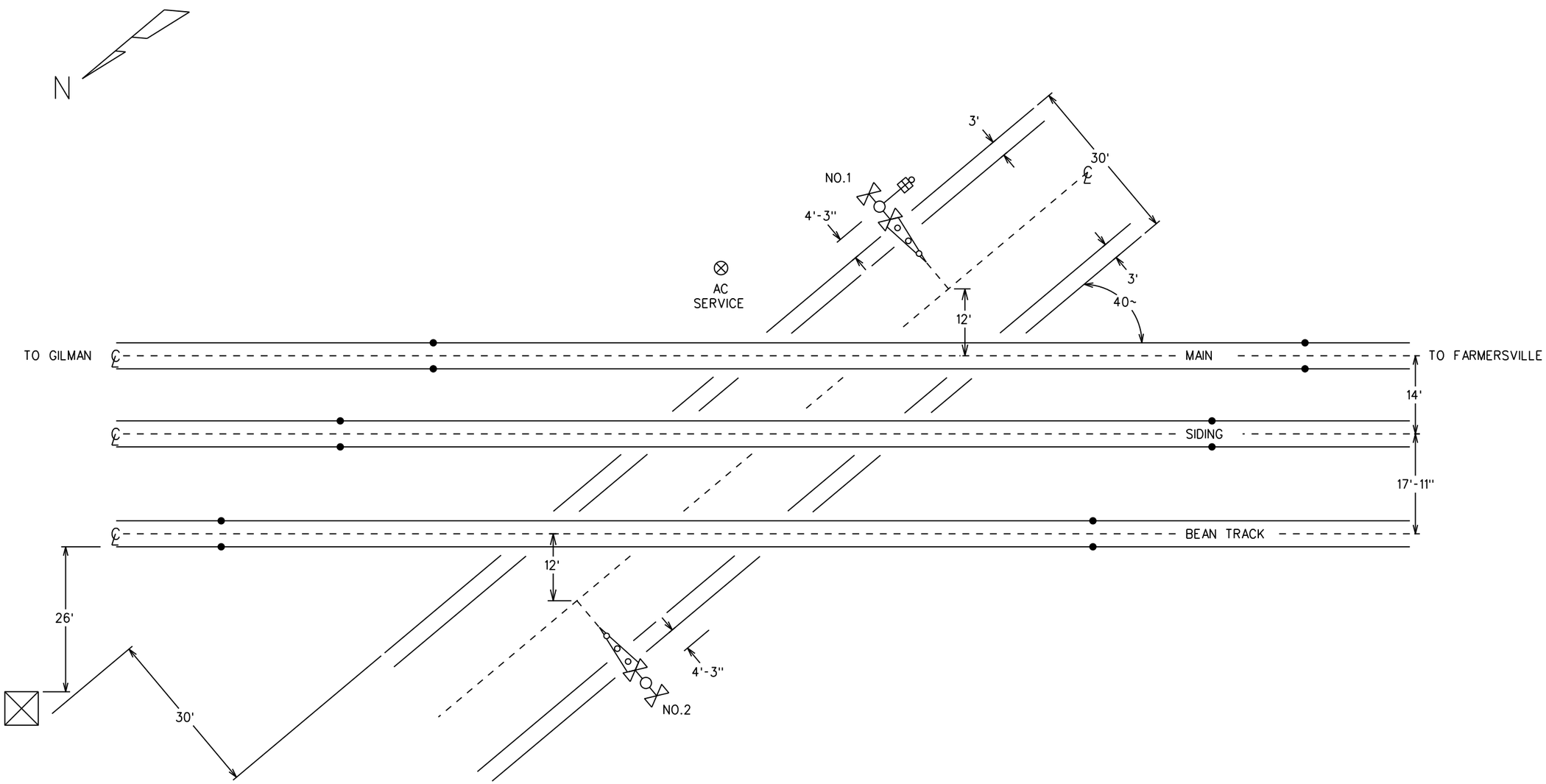

NOTES

1) 60 MPH DESIGN SPEED - MAIN NORTHBOUND
   25 MPH DESIGN SPEED - MAIN SOUTHBOUND
   10 MPH DESIGN SPEED - SIDING & BEAN TRACK

2) 105 FEET MAXIMUM CLEARANCE DISTANCE

3) 156 FEET ISLAND DISTANCE

4) CONSTANT WARNING CONTROL 4) MOTION DETECTOR CONTROL

5) APPROACH CIRCUIT DISTANCE PROVIDES FOR:
   7 SEC CLEARANCE TIME
   0 SEC PREEMPTION TIME (0 SEC ADVANCE TIME)
   27 SEC MINIMUM WARNING TIME
   4 SEC GATE DESCENT DELAY
5 10 SEC BUFFER TIME
   5 SEC EQUIPMENT REACTION TIME

6) 19 FEET NO.1 GATE ARM LENGTH
   19 FEET NO.2 GATE ARM LENGTH

SII 03 SEP 2015

PROPOSED
DESIGN NO. 15-0260
RED-IN YELLOW-OUT

AS INSTALLED
DATE
BY
(PRINT NAME)

FIELD TO VERIFY ALL DIMENSIONS

TO BE CONFIRMED

CONFIRMED
DATE
BY
(PRINT NAME)

PROPOSED D	M	Y	REVISIONS	D	C	COMPLETED D	M	Y	C
			PLAN REDRAWN			30	03	15	TPF
03	09	15	CWT UPGRADE	NAD	BJW				

REGION SOUTHERN
SUB. GILMAN 349

SIGNALS AND COMMUNICATIONS HOMEWOOD
5 MARCH 1976
DES.
CH.

SITUATION SKETCH
SCALE 1" = 20'
GIBSON CITY, IL
IL RT 9

GIL-110.71-0

DOT•289 366P

19

gil-110.71-0.dgn
10-FEB-2016

REVISIONS				
NO.	DATE	BY	DESCRIPTION	APP. BY
1				
2				
3				
4				
5				

FLASHING LIGHT UNITS ALIGNMENT TABLE

PRIMARY FRONT LIGHTS FOR VEHICLES							
SIG •	LIGHT •	ROUNDEL		ROAD SPEED	MINIMUM DISTANCE	RECOMMENDED DISTANCE	ALIGNMENT DISTANCE
		SIZE	TYPE	MPH	FT	FT	FT
1	1, 2	12"	LED	40	390	650	
2	7, 8	12"	LED	40	390	650	
BACK LIGHTS FOR VEHICLES							
SIG •	LIGHT •	ROUNDEL		ROAD SPEED	MINIMUM DISTANCE	RECOMMENDED DISTANCE	ALIGNMENT DISTANCE
		SIZE	TYPE	MPH	FT	FT	FT
1	3, 4	12"	LED	N/A	N/A	N/A	50
2	5, 6	12"	LED	N/A	N/A	N/A	50

NOTE
FIELD IS TO PROVIDE THE ACTUAL ALIGNMENT DISTANCE AS DETERMINED BY
SCP-706: ROAD CROSSING DEVICE LIGHT UNIT ALIGNMENT PROCEDURES

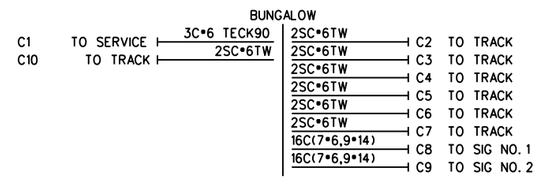

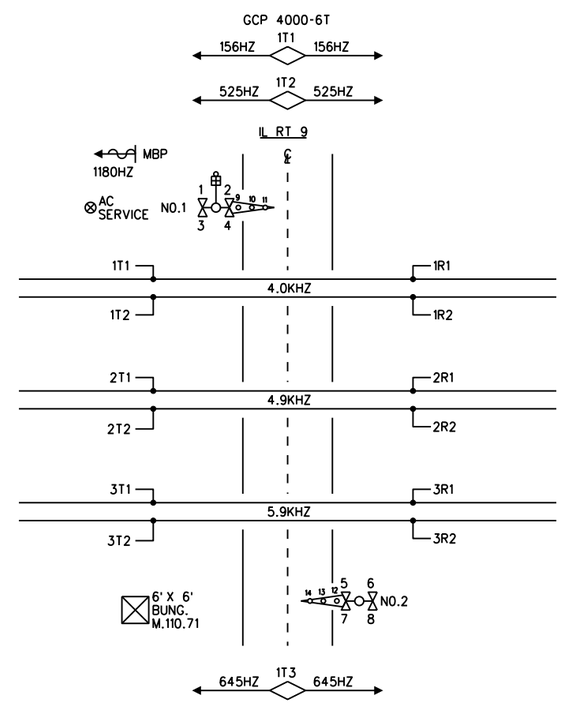

CONTENT	SHEET NO.
SITUATION SKETCH	0
TRACK LAYOUT & INDEX	01
GCP 4000 CHASSIS & MODULE LAYOUT	02
GCP 4000 PROGRAM INFORMATION	03
GCP 4000 PROGRAM INFORMATION	04
GCP 4000/SEAR IIi SETUP & PROGRAM	05
GCP 4000 CALIBRATION HISTORY	06
GCP 4000 TRACK 1,2 & 3 MODULE CONNECTIONS	07
GCP 4000 TRACK 4,5 & 6 MODULE CONNECTIONS	08
GCP 4000 CPUII+, VHF COMMUNICATOR & RAILFUSION	09
GCP 4000 SEAR IIi WITH GFT & PSO	10
GCP 4000/SSCCIIIi GATE CONTROLLERS W/ ILODS	11
GATE 1&2 MECH. CONTROL CIRCUITS SAFETRAN S-60	12
DC DISTRIBUTION	13
AC DISTRIBUTION	14
BUNGALOW LAYOUT TOP VIEW	15
BUNGALOW LAYOUT SIDE D & L.I.G.P. INSIDE	16
ENTRANCE BOARD L.I.G.P. OUTSIDE	17
BUNGALOW LAYOUT SIDES A, B & C	18

gil-110.71-01.dgn
10-FEB-2016

SIEMENS INDUSTRY INC

DES.: NDH	DATE: 11/05/15	JOB NO.: PICA10600	
CKD.: MRB	ISSUE DATE: N/A	EST. NO.: XP-7988	
DRN.: NDH	PLAN NO.: N/A	SHEET 1 OF 18	
P TIME: 08:37	P DATE: $$PLOT_DATE	CAD ID.: GIL-110.71-01	

TO BE CONFIRMED

CONFIRMED
DATE _____
BY _____
(PRINT NAME)

SII 05 NOV 2015
PROPOSED
DESIGN NO. 15-0260
RED-IN YELLOW-OUT

AS INSTALLED
DATE _____
BY _____
(PRINT NAME)

PROPOSED			REVISIONS	D	C	COMPLETED			C
D	M	Y				D	M	Y	

REGION SOUTHERN
SUB. GILMAN 349
CN

SIGNALS AND COMMUNICATIONS HOMEWOOD
05 NOVEMBER 2015
DES. NDH
CH. MRB

TRACK LAYOUT & INDEX

GIBSON CITY, IL
IL RT 9

GIL-110.71-01

DOT•289 366P

SIEMENS INDUSTRY INC
LOUISVILLE DIVISION, LOUISVILLE, KY

REVISIONS				
NO.	DATE	BY	DESCRIPTION	APP. BY
1				
2				
3				
4				
5				

(AC1)

CPU II+	TRACK 1	TRACK 2	TRACK 3	TRACK 4	TRACK 5	TRACK 6	SSCC-1	SSCC-2
A80403	A80418	A80418	A80418	A80418	A80418	A80418	A80405	A80405
SLOT 1M1 OR 2M1	SLOT 1M2 OR 2M2	SLOT 1M3 OR 2M3	SLOT 1M4 OR 2M4	SLOT 1M5 OR 2M5	SLOT 1M6 OR 2M6	SLOT 1M7 OR 2M7	SLOT 1M8	SLOT 2M8

GRADE CROSSING PREDICTOR
MODEL 4000
Dual 6 Track System

A80460

•10 (grn)

CPU II+ MODULE A80403	TRACK MODULE A80418	TRACK MODULE A80418	TRACK MODULE A80418	BLANK COVER PLATE SLOT NOT USED	BLANK COVER PLATE SLOT NOT USED	BLANK COVER PLATE SLOT NOT USED	SSCCIIIi MODULE A80405	DISPLAY MODULE A80407-03
SLOT 1M1	SLOT 1M2	SLOT 1M3	SLOT 1M4	SLOT 1M5	SLOT 1M6	SLOT 1M7	SLOT 1M8	

CPU II+ MODULE A80403	TRACK MODULE A80418	TRACK MODULE A80418	TRACK MODULE A80418	BLANK COVER PLATE SLOT NOT USED	BLANK COVER PLATE SLOT NOT USED	BLANK COVER PLATE SLOT NOT USED	SSCCIIIi MODULE A80405	TRANSFER MODULE A80468
SLOT 2M1	SLOT 2M2	SLOT 2M3	SLOT 2M4	SLOT 2M5	SLOT 2M6	SLOT 2M7	SLOT 2M8	

SEAR IIi
A80410

NOTES

1) DISABLE THE DISPLAY HEATER BY REMOVING JUMPER J-22 (LOCATED AT THE EDGE OF THE DISPLAY MODULE CARD THAT PLUGS INTO THE CHASSIS)

2) SET THE TRANSFER INTERVAL TIME TO 3 MINUTES BY SETTING DIPSWITCH S3 (LOCATED IN THE UPPER LEFT CORNER OF THE TRANSFER MODULE CARD) TO:

S3-0	S3-1	S3-2	S3-3	S3-4
1	1	0	0	0

WHERE 0 = UP/OPEN
1 = DOWN/CLOSED

ATTENTION!

ENSURE THE DISPLAY MODULE HEATER IS DISABLED
LEAVING THE DISPLAY HEATER ENABLED WILL REDUCE THE AMOUNT OF BATTERY STANDBY TIME IN THE EVENT OF AN AC POWER FAILURE

HEATER FUNCTION IS JUMPER SELECTABLE ON THE DISPLAY MODULE BOARD
THREE OPTIONS ARE AVAILABLE
NORMAL LCD HTR (DEFAULT)
HI CURRENT
NO JUMPER (HEATER DISABLED)

SII 05 NOV 2015

PROPOSED
DESIGN NO. 15-0260
RED-IN YELLOW-OUT

AS INSTALLED
DATE _____
BY _____
(PRINT NAME)

PROPOSED D	PROPOSED M	PROPOSED Y	REVISIONS	D	C	COMPLETED D	COMPLETED M	COMPLETED Y	C

REGION SOUTHERN
SUB. GILMAN 349

SIGNALS AND COMMUNICATIONS HOMEWOOD
DES. NDH
05 NOVEMBER 2015
CH. MRB

GCP 4000
CHASSIS & MODULE LAYOUT
GIBSON CITY, IL
IL RT 9

GIL-110.71-02

DOT•289 366P

SIEMENS INDUSTRY INC

DES.: NDH	DATE: 11/05/15	JOB NO.: PICA10600	
CKD.: MRB	ISSUE DATE: N/A	EST. NO.: XP-7988	
DRN.: NDH	PLAN NO.: N/A	SHEET 2 OF 18	
P. TIME: 08:37	P. DATE: $$PLOT_DATE	CAD ID.: GIL-110.71-02	

SIEMENS INDUSTRY INC
LOUISVILLE DIVISION, LOUISVILLE, KY

gil-110.71-02.dgn
10-FEB-2016

REVISIONS			
NO.	DATE	BY	DESCRIPTION	APP. BY
1				
2				
3				
4				
5				

Program Report

Location and SIN

DOT Number: 289366P
Milepost Number: 110.71
Site Name: IL RT 9

SIN: 710334911016

MCF and Template Selection

MCF Name: GCP-T6X-02-2.mcf
MCF Revision: 022
MCFCRC: 79225F13

Template • 1A:6 Trk Bi(OCCN)

Check Numbers

Office Check Number: 7076E8E3
Config. Check Number: 6DBB283B
(Based on MCF Revision 022)

Program

BASIC: module configuration
Track 1/PSO 1 Slot • Track (OCCN)
Track 2/RIO 1 Slot • Track (OCCN)
Track 3/PSO 2 Slot • Track (OCCN)
Track 4/PSO 3 Slot • Not Used (OCCN)
Track 5/RIO 2 Slot • Not Used (OCCN)
Track 6/RIO 3 Slot • Not Used (OCCN)
SSCC-1 Slot • SSCC3i(OCCN)
SSCC-2 Slot • SSCC3i(OCCN)
SEAR Used • Yes (OCCN)

BASIC: MS/GCP operation
Track 1 : MS/GCP Operation • Yes (OCCN)
Track 2 : MS/GCP Operation • Yes (OCCN)
Track 3 : MS/GCP Operation • Yes (OCCN)

BASIC: island operation
Track 1 : Island Used • Internal(OCCN)
Track 2 : Island Used • Internal(OCCN)
Track 3 : Island Used • Internal(OCCN)

BASIC: preemption
Preempt Logic • No (OCCN)

BASIC: radio Dax links
Radio DAX link A Used • No (OCCN)
Radio DAX link B Used • No (OCCN)

BASIC: Vital Comms links
Vital Comms link 1 Used • No (OCCN)
Vital Comms link 2 Used • No (OCCN)

PREDICTORS: track 1
Track 1 : Prime Used • Yes (OCCN)
Track 1 : Dax A Used • No (OCCN)
Track 1 : Dax B Used • No (OCCN)
Track 1 : Dax C Used • No (OCCN)
Track 1 : Dax D Used • No (OCCN)
Track 1 : Dax E Used • No (OCCN)
Track 1 : Dax F Used • No (OCCN)
Track 1 : Dax G Used • No (OCCN)

PREDICTORS: track 2
Track 2 : Prime Used • Yes (OCCN)
Track 2 : Dax A Used • No (OCCN)
Track 2 : Dax B Used • No (OCCN)
Track 2 : Dax C Used • No (OCCN)
Track 2 : Dax D Used • No (OCCN)
Track 2 : Dax E Used • No (OCCN)
Track 2 : Dax F Used • No (OCCN)
Track 2 : Dax G Used • No (OCCN)

PREDICTORS: track 3
Track 3 : Prime Used • Yes (OCCN)
Track 3 : Dax A Used • No (OCCN)
Track 3 : Dax B Used • No (OCCN)
Track 3 : Dax C Used • No (OCCN)
Track 3 : Dax D Used • No (OCCN)
Track 3 : Dax E Used • No (OCCN)
Track 3 : Dax F Used • No (OCCN)
Track 3 : Dax G Used • No (OCCN)

GCP: track 1
Track 1 : GCP Freq Category • Standard (Field)
Track 1 : GCP Frequency • 156 Hz (Field,TCN)
Track 1 : Approach Distance • 3710 ft (Field,TCN)
Track 1 : Uni/Bi/Sim-Bidirnl • Bidirnl (OCCN,TCN)
Track 1 : GCP Transmit Level • High (Field,TCN)
Track 1 : Island Connection • Isl 1 (OCCN)
Track 1 : Directionally Wired • No (OCCN)
Track 1 : Island Distance • 156 ft (Field,TCN)
Track 1 : Computed Distance • 9999 ft (Field,TCN)
Track 1 : Linearization Steps • 100 (Field,TCN)

GCP: track 1 enhanced det
Track 1 : Inbound PS Sensitivity • High (Field)
Track 1 : Speed Limiting Used • Yes (Field)
Track 1 : Outbound False Act Lvl • Normal(Field)
Track 1 : Outbound PS Timer • 20 sec (Field)
Track 1 : Trailing Switch Logic • On (Field)
Track 1 : Post Joint Detn Time • 15 sec (OCCN)
Track 1 : Adv Appr Predn • No (OCCN)
Track 1 : Cancel Pickup Delay • This Isl(OCCN)

GCP: track 1 BIDAX RX
Track 1 : BIDAX To RX Appr • Not Used (OCCN)

GCP: track 1 BIDAX TX
Track 1 : BIDAX To TX Appr • Not Used (OCCN)

GCP: track 1 prime
Track 1 : Prime Warning Time • 37 sec (OCCN)
Track 1 : Prime Offset Distance • 0 ft (Field)
Track 1 : Switch MS EZ Level • 9 (OCCN)
Track 1 : Prime MS/GCP Mode • Pred (OCCN)
Track 1 : Prime Pickup Delay • 30 sec (OCCN)
Track 1 : Prime UAX • Not Used (OCCN)

GCP: track 1 pos start
Track 1 : Positive Start • Off (OCCN)
Track 1 : Sudden Shnt Det Used • No (OCCN)
Track 1 : Low EZ Detection Used • No (OCCN)

GCP: track 1 MS Control
Track 1 : MS/GCP Ctrl IP Used • No (OCCN)
Track 1 : MS Sensitivity Level • 0 (Field)
Track 1 : Compensation Level • 1300 (Field,TCN)
Track 1 : Warn Time-Ballast Comp • High (Field,TCN)
Track 1 : Low EX Adjustment • 39 (Field)
Track 1 : Bidirn Dax Passthru • No (OCCN)
Track 1 : False Act on Train Stop • No (Field)
Track 1 : EX Limiting Used • Yes (Field)
Track 1 : EZ Correction Used • Yes (Field)

GCP: track 2
Track 2 : GCP Freq Category • Standard (Field)
Track 2 : GCP Frequency • 525 Hz (Field,TCN)
Track 2 : Approach Distance • 620 ft (Field,TCN)
Track 2 : Uni/Bi/Sim-Bidirnl • Bidirnl (OCCN,TCN)
Track 2 : GCP Transmit Level • High (Field,TCN)
Track 2 : Island Connection • Isl 2 (OCCN)
Track 2 : Directionally Wired • No (OCCN)
Track 2 : Island Distance • 156 ft (Field,TCN)
Track 2 : Computed Distance • 9999 ft (Field,TCN)
Track 2 : Linearization Steps • 100 (Field,TCN)

GCP: track 2 enhanced det
Track 2 : Inbound PS Sensitivity • High (Field)
Track 2 : Speed Limiting Used • Yes (Field)
Track 2 : Outbound False Act Lvl • Normal(Field)
Track 2 : Outbound PS Timer • 20 sec (Field)
Track 2 : Trailing Switch Logic • On (Field)
Track 2 : Post Joint Detn Time • 15 sec (OCCN)
Track 2 : Adv Appr Predn • No (OCCN)
Track 2 : Cancel Pickup Delay • This Isl(OCCN)

GCP: track 2 BIDAX RX
Track 2 : BIDAX To RX Appr • Not Used (OCCN)

GCP: track 2 BIDAX TX
Track 2 : BIDAX To TX Appr • Not Used (OCCN)

GCP: track 2 prime
Track 2 : Prime Warning Time • 37 sec (OCCN)
Track 2 : Prime Offset Distance • 0 ft (Field)
Track 2 : Switch MS EZ Level • 42 (OCCN)
Track 2 : Prime MS/GCP Mode • Pred (OCCN)
Track 2 : Prime Pickup Delay • 30 sec (OCCN)
Track 2 : Prime UAX • Not Used (OCCN)

GCP: track 2 pos start
Track 2 : Positive Start • Off (OCCN)
Track 2 : Sudden Shnt Det Used • No (OCCN)
Track 2 : Low EZ Detection Used • No (OCCN)

GCP: track 2 MS Control
Track 2 : MS/GCP Ctrl IP Used • No (OCCN)
Track 2 : MS Sensitivity Level • 0 (Field)
Track 2 : Compensation Level • 1300 (Field,TCN)
Track 2 : Warn Time-Ballast Comp • High (Field,TCN)
Track 2 : Low EX Adjustment • 39 (Field)
Track 2 : Bidirn Dax Passthru • No (OCCN)
Track 2 : False Act on Train Stop • No (Field)
Track 2 : EX Limiting Used • Yes (Field)
Track 2 : EZ Correction Used • Yes (Field)

GCP: track 3
Track 3 : GCP Freq Category • Standard (Field)
Track 3 : GCP Frequency • 645 Hz (Field,TCN)
Track 3 : Approach Distance • 620 ft (Field,TCN)
Track 3 : Uni/Bi/Sim-Bidirnl • Bidirnl (OCCN,TCN)
Track 3 : GCP Transmit Level • High (Field,TCN)
Track 3 : Island Connection • Isl 3 (OCCN)
Track 3 : Directionally Wired • No (OCCN)
Track 3 : Island Distance • 156 ft (Field,TCN)
Track 3 : Computed Distance • 9999 ft (Field,TCN)
Track 3 : Linearization Steps • 100 (Field,TCN)

GCP: track 3 enhanced det
Track 3 : Inbound PS Sensitivity • High (Field)
Track 3 : Speed Limiting Used • Yes (Field)
Track 3 : Outbound False Act Lvl • Normal(Field)
Track 3 : Outbound PS Timer • 20 sec (Field)
Track 3 : Trailing Switch Logic • On (Field)
Track 3 : Post Joint Detn Time • 15 sec (OCCN)
Track 3 : Adv Appr Predn • No (OCCN)
Track 3 : Cancel Pickup Delay • This Isl(OCCN)

GCP: track 3 BIDAX RX
Track 3 : BIDAX To RX Appr • Not Used (OCCN)

GCP: track 3 BIDAX TX
Track 3 : BIDAX To TX Appr • Not Used (OCCN)

GCP: track 3 prime
Track 3 : Prime Warning Time • 37 sec (OCCN)
Track 3 : Prime Offset Distance • 0 ft (Field)
Track 3 : Switch MS EZ Level • 42 (OCCN)
Track 3 : Prime MS/GCP Mode • Pred (OCCN)
Track 3 : Prime Pickup Delay • 30 sec (OCCN)
Track 3 : Prime UAX • Not Used (OCCN)

GCP: track 3 pos start
Track 3 : Positive Start • Off (OCCN)
Track 3 : Sudden Shnt Det Used • No (OCCN)
Track 3 : Low EZ Detection Used • No (OCCN)

GCP: track 3 MS Control
Track 3 : MS/GCP Ctrl IP Used • No (OCCN)
Track 3 : MS Sensitivity Level • 0 (Field)
Track 3 : Compensation Level • 1300 (Field,TCN)
Track 3 : Warn Time-Ballast Comp • High (Field,TCN)
Track 3 : Low EX Adjustment • 39 (Field)
Track 3 : Bidirn Dax Passthru • No (OCCN)
Track 3 : False Act on Train Stop • No (Field)
Track 3 : EX Limiting Used • Yes (Field)
Track 3 : EZ Correction Used • Yes (Field)

ISLAND: track 1
Track 1 : Isl Frequency • 4.0 kHz (Field)
Track 1 : Pickup Delay (2s +) • 0 sec (OCCN)
Track 1 : Isl Enable IP Used • No (OCCN)

ISLAND: track 2
Track 2 : Isl Frequency • 4.9 kHz (Field)
Track 2 : Pickup Delay (2s +) • 0 sec (OCCN)
Track 2 : Isl Enable IP Used • No (OCCN)

ISLAND: track 3
Track 3 : Isl Frequency • 5.9 kHz (Field)
Track 3 : Pickup Delay (2s +) • 0 sec (OCCN)
Track 3 : Isl Enable IP Used • No (OCCN)

AND: track Anding
AND 1 XR Used • Yes (OCCN)
AND 2 Used • No (OCCN)
AND 3 Used • No (OCCN)
AND 4 Used • No (OCCN)
AND 5 Used • No (OCCN)
AND 6 Used • No (OCCN)
AND 7 Used • No (OCCN)
AND 8 Used • No (OCCN)

AND: AND 1 XR
AND 1 XR Track 1 • Prime (OCCN)
AND 1 XR Track 2 • Prime (OCCN)
AND 1 XR Track 3 • Prime (OCCN)
AND 1 Enable Used • Yes (OCCN)
And 1 Enable Pickup • 0 sec (OCCN)
AND 1 Enable Drop • 0 sec (OCCN)
AND 1 Wrap Used • No (OCCN)

ADVANCED: MS restart
MS/GCP Restart Used • No (OCCN)

ADVANCED: out of service
OOS Control • OOS IPs (OCCN)

ADVANCED: out of service 2
T1 OOS Control • OOS Input 1 (OCCN)
T2 OOS Control • OOS Input 2 (OCCN)
T3 OOS Control • OOS Input 3 (OCCN)
T1 OOS Controls • GCP and Island (OCCN)
T2 OOS Controls • GCP and Island (OCCN)
T3 OOS Controls • GCP and Island (OCCN)

ADVANCED: track wrap circuits
Wrap LOS Timer • 5 sec (OCCN)
Track 1 Wrap Used • No (OCCN)
Track 2 Wrap Used • No (OCCN)
Track 3 Wrap Used • No (OCCN)

ADVANCED: trk 1 overrides
Track 1 : All Predictors Override Used • No (OCCN)

ADVANCED: trk 2 overrides
Track 2 : All Predictors Override Used • No (OCCN)

ADVANCED: trk 3 overrides
Track 3 : All Predictors Override Used • No (OCCN)

ADVANCED: OR logic
OR 1 Used • No (OCCN)
OR 2 Used • No (OCCN)
OR 3 Used • No (OCCN)
OR 4 Used • No (OCCN)

ADVANCED: internal I/O 1
Pass Thrus • No (OCCN)
Int.1 Sets • Not Used (OCCN)
Int.1 Set by • Not Used (OCCN)
Int.2 Sets • Not Used (OCCN)
Int.2 Set by • Not Used (OCCN)
Int.3 Sets • Not Used (OCCN)
Int.3 Set by • Not Used (OCCN)
Int.4 Sets • Not Used (OCCN)
Int.4 Set by • Not Used (OCCN)

ADVANCED: internal I/O 2
Int.5 Sets • Not Used (OCCN)
Int.5 Set by • Not Used (OCCN)
Int.6 Sets • Not Used (OCCN)
Int.6 Set by • Not Used (OCCN)
Int.7 Sets • Not Used (OCCN)
Int.7 Set by • Not Used (OCCN)
Int.8 Sets • Not Used (OCCN)
Int.8 Set by • Not Used (OCCN)

ADVANCED: internal I/O 3
Int.9 Sets • Not Used (OCCN)
Int.9 Set by • Not Used (OCCN)
Int.10 Sets • Not Used (OCCN)
Int.10 Set by • Not Used (OCCN)
Int.11 Sets • Not Used (OCCN)
Int.11 Set by • Not Used (OCCN)
Int.12 Sets • Not Used (OCCN)
Int.12 Set by • Not Used (OCCN)

ADVANCED: internal I/O 4
Int.13 Sets • Not Used (OCCN)
Int.13 Set by • Not Used (OCCN)
Int.14 Sets • Not Used (OCCN)
Int.14 Set by • Not Used (OCCN)
Int.15 Sets • Not Used (OCCN)
Int.15 Set by • Not Used (OCCN)
Int.16 Sets • Not Used (OCCN)
Int.16 Set by • Not Used (OCCN)

ADVANCED: site options
Daylight Savings • On (Field)
Units • Standard (OCCN)
Maint Call Rpt IP Used • No (OCCN)
Emergency Activate IP • No (OCCN)
EZ/EX Logging • Change (Field)
EZ/EX Point Change • 3 (Field)

CONT'D ON
SHEET 04

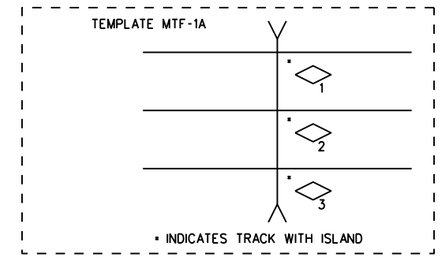

NOTES
1) DISTANCE(S) TO BE VERIFIED AT INSTALLATION
INDICATE SELECTED PROGRAMMED VALUE IF DIFFERENT THAN SHOWN
REFER TO 4000 GCP INSTRUCTION/INSTALLATION MANUAL
FOR PROGRAMMING PARAMETERS

2) PROGRAM TEXT HIGHLIGHTED IN RED INDICATES 4000 PROGRAM
MODIFICATIONS TO DEFAULT PROGRAM VALUES

3) EACH CONSTANT WARNING DEVICE SYSTEM TO BE PROGRAMMED TO
CONVERT TO A MOTION SENSOR 300 FEET FROM EDGE OF ROAD
TRAVELLED WAY
SHUNT TRACK 300 FEET FROM EDGE OF ROAD TRAVELLED WAY
AND NOTE "EZ" VALUE
PROGRAM EACH SYSTEM WITH THE INDICATED "EZ" VALUE •2

4) VERIFY SET TIMER VALUE TO MATCH ACTUAL TRAIN MOVEMENT
WITHIN THE CROSSING APPROACH CIRCUITS

SII 05 NOV 2015

PROPOSED
DESIGN NO. 15-0260
RED-IN YELLOW-OUT

AS INSTALLED
DATE _____
BY _____
(PRINT NAME)

PROPOSED			REVISIONS	D	C	COMPLETED			C
D	M	Y				D	M	Y	

REGION SOUTHERN
SUB. GILMAN 349

SIGNALS AND COMMUNICATIONS HOMEWOOD
05 NOVEMBER 2015
DES. NDH
CH. MRB

GCP 4000
PROGRAM INFORMATION
GIBSON CITY, IL
IL RT 9

GIL-110.71-03

DOT•289 366P

SIEMENS INDUSTRY INC			
DES.: NDH	DATE: 11/05/15	JOB NO.: PICA10600	
CKD.: MRB	ISSUE DATE: N/A	EST. NO.: XP-7988	
DRN.: NDH	PLAN NO.: N/A	SHEET 3 OF 18	
P TIME: 08:37	P DATE: $$PLOT_DATE	CAD ID.: GIL-110.71-03	

SIEMENS INDUSTRY INC
LOUISVILLE DIVISION, LOUISVILLE, KY

gil-110.71-03.dgn
10-FEB-2016

CONT'D ON
SHEET 03

SSCC
Gates Used • Yes (OCCN)
SSCC1+2 GPs Coupled • Yes (OCCN)
Min Activation • 27 sec (OCCN)
Rmt Activation Cancel • 3 min (OCCN)
Bell On Gate Rising • No (OCCN)
Mute Bell On Gate Down • Yes (OCCN)
SSCCIV Controller Used • No (OCCN)

SSCC: 1
SSCC-1 Activation • AND 1 XR (OCCN)
SSCC-1 Gate Delay • 4 sec (OCCN)
SSCC-1 Number of GPs • 1 (OCCN)
SSCC-1 Number of GDs • 1 (OCCN)
SSCC 1 : Flash Rate • 55 (OCCN)
SSCC 1 : Low Battery Detection • No (Field)
SSCC 1 : Flash Sync • master (OCCN)
SSCC 1 : Invert Gate Output • No (OCCN)
SSCC 1 : Lamp Neutral Test • Off (Field)
Aux-1 Xng Ctrl Used • No (OCCN)

SSCC: 2
SSCC-2 Activation • AND 1 XR (OCCN)
SSCC-2 Gate Delay • 4 sec (OCCN)
SSCC-2 Number of GPs • 0 (OCCN)
SSCC-2 Number of GDs • 1 (OCCN)
SSCC 2 : Flash Rate • 55 (OCCN)
SSCC 2 : Low Battery Detection • No (Field)
SSCC 2 : Flash Sync • slave (OCCN)
SSCC 2 : Invert Gate Output • No (OCCN)
SSCC 2 : Lamp Neutral Test • Off (Field)
Aux-2 Xng Ctrl Used • No (OCCN)

OUTPUT: assignment page 1
OUT 1.1 • Not Used (OCCN)
OUT 1.2 • Not Used (OCCN)
OUT 2.1 • Not Used (OCCN)
OUT 2.2 • Not Used (OCCN)
OUT 3.1 • Not Used (OCCN)
OUT 3.2 • Not Used (OCCN)

INPUT: assignment page 1
IN 1.1 • Not Used (OCCN)
IN 1.2 • Not Used (OCCN)
IN 2.1 • Not Used (OCCN)
IN 2.2 • Not Used (OCCN)
IN 3.1 • Not Used (OCCN)
IN 3.2 • Not Used (OCCN)

IO: assignment SSCC
OUT GC 1 • Gate Output 1 (OCCN)
OUT GC 2 • Gate Output 2 (OCCN)
IN 7.1 • AND 1 XR Enable (OCCN)
IN 7.2 • Out Of Service IP 3 (OCCN)
IN 7.3 • Not Used (OCCN)
IN 7.4 • GD 1.1 (OCCN)
IN 7.5 • GP 1.1 (OCCN)
IN 8.1 • Out Of Service IP 1 (OCCN)
IN 8.2 • Out Of Service IP 2 (OCCN)
IN 8.3 • Not Used (OCCN)
IN 8.4 • GD 2.1 (OCCN)
IN 8.5 • Not Used (OCCN)

SEAR
SEAR Subnode • 99 (OCCN)
DI 1 • General 1 (OCCN)
DI 2 • Gnd Flt Tester 1 (OCCN)
Rly 1 • Ground Fault Test (OCCN)
Rly 2 • AC Control (OCCN)

SEAR: inputs
SP 2.1 • POK 1 (OCCN)
SP 3.1 • Not Used (OCCN)
SP 4.1 • Not Used (OCCN)
SP 5.1 • Not Used (OCCN)
SP 6.1 • Not Used (OCCN)

SEAR: slot 1-4 inputs
IN 1.1 • Not Used (OCCN)
IN 1.2 • Not Used (OCCN)
IN 2.1 • Not Used (OCCN)
IN 2.2 • POK 2 (OCCN)
IN 3.1 • Not Used (OCCN)
IN 3.2 • Not Used (OCCN)
IN 4.1 • Not Used (OCCN)
IN 4.2 • Not Used (OCCN)

SEAR: inputs slot 5
IN 5.1 • Not Used (OCCN)
IN 5.2 • Not Used (OCCN)

SEAR: inputs slot 6
IN 6.1 • Not Used (OCCN)
IN 6.2 • Not Used (OCCN)

SEAR: slot 7-8 inputs
IN 7.3 • TSS 1 (OCCN)
IN 8.3 • TSS 2 (OCCN)
IN 8.5 • General 2 (OCCN)

SITE: programming
Radio Subnode • 1 (Field)
Field Password • Off (OCCN)
Low Battery Enabled • Off (Field)

Configuration Package File

Filename: gil-110.71.pac

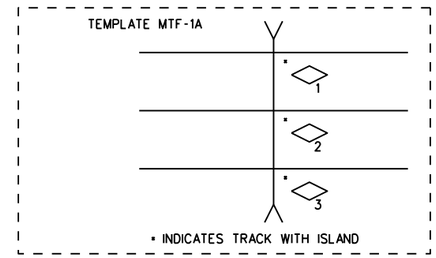

NOTES
1) DISTANCE(S) TO BE VERIFIED AT INSTALLATION
INDICATE SELECTED PROGRAMMED VALUE IF DIFFERENT THAN SHOWN
REFER TO 4000 GCP INSTRUCTION/INSTALLATION MANUAL
FOR PROGRAMMING PARAMETERS

2) PROGRAM TEXT HIGHLIGHTED IN RED INDICATES 4000 PROGRAM
MODIFICATIONS TO DEFAULT PROGRAM VALUES

3) EACH CONSTANT WARNING DEVICE SYSTEM TO BE PROGRAMMED TO
CONVERT TO A MOTION SENSOR 300 FEET FROM EDGE OF ROAD
TRAVELLED WAY
SHUNT TRACK 300 FEET FROM EDGE OF ROAD TRAVELLED WAY
AND NOTE "EZ" VALUE
PROGRAM EACH SYSTEM WITH THE INDICATED "EZ" VALUE •2

4) VERIFY SET TIMER VALUE TO MATCH ACTUAL TRAIN MOVEMENT
WITHIN THE CROSSING APPROACH CIRCUITS

SII 05 NOV 2015
PROPOSED
DESIGN NO. 15-0260
RED-IN YELLOW-OUT
AS INSTALLED
DATE _____
BY _____
(PRINT NAME)

PROPOSED			REVISIONS	D	C	COMPLETED			C
D	M	Y				D	M	Y	

REGION SOUTHERN
SUB. GILMAN 349
SIGNALS AND COMMUNICATIONS HOMEWOOD
05 NOVEMBER 2015
DES. NDH
CH. MRB
GCP 4000
PROGRAM INFORMATION
GIBSON CITY, IL
IL RT 9
GIL-110.71-04
DOT•289 366P

REVISIONS				
NO.	DATE	BY	DESCRIPTION	APP. BY
1				
2				
3				
4				
5				

SIEMENS INDUSTRY INC
DES.: NDH DATE: 11/05/15 JOB NO.: PICA10600
CKD.: MRB ISSUE DATE: N/A EST. NO.: XP-7988
DRN.: NDH PLAN NO.: N/A SHEET 4 OF 18
P. TIME: 08:37 P. DATE: $$PLOT_DATE CAD ID.: GIL-110.71-04

SIEMENS INDUSTRY INC
LOUISVILLE DIVISION, LOUISVILLE, KY

gil-110.71-04.dgn
10-FEB-2016

REVISIONS				
NO.	DATE	BY	DESCRIPTION	APP. BY
1				
2				
3				
4				
5				

TO CONFIGURE SEARII & SEARIIi PRESS SITE SETUP KEY. USE ARROW KEYS TO MAKE SELECTION, PRESS ENTER AFTER SELECTION HAS BEEN MADE.

STAGE 1

PROGRAM MENU QUESTIONS	PROGRAM	OPTIONS/RANGE
DATE/TIME?	CURRENT DATE/TIME	CURRENT DATE/TIME
AUTOMATIC DST ADJUSTMENT?	YES	YES,NO
TIME ZONE?	CENTRAL	EASTERN,CENTRAL,MOUNTAIN, PACIFIC,ALASKA,HAWAII, ATLANTIC,SASKATCHEWAN, NEW FOUNLAND
SITE NAME?	IL RT 9	STREET NAME
MILE POST?	110.71	MILEAGE
DOT/CROSSING IS #?	289366P	123456A
TESTER TYPE?	CROSSING	CROSSING,WAYSIDE
DATE FORMAT?	dd-mm-yyyy	mm-dd-yyyy,dd-mm-yyyy
TEMPERATURE FORMAT?	FAHRENHEIT	FAHRENHEIT,CELSIUS
INDICATE HOLD?	0	SECONDS
SITE TYPE?		NO COM,BULLHORN,DIALUP, NODE,COLLECTOR
SITE ATCS ADDRESS?		7.RRR.LLL.GGG.99.01
OFFICE ATCS ADDRESS?		2.RRR.NN.DDDD
(FOR NODE USE) PRIMARY HOP ADDR?		7.RRR.LLL.GGG.00.01
(FOR NODE USE) BACKUP HOP ADDR1?		7.RRR.LLL.GGG.00.01
(FOR NODE USE) BACKUP HOP ADDR2?		7.RRR.LLL.GGG.00.01
(FOR COLLECTOR USE) POLL ID?		1-99
(FOR COLLECTOR USE) MODE?		GEN/ATCS,GENISYS
(FOR COLLECTOR USE) WAMS/XID?		ENABLED,DISABLE
(FOR COLLECTOR USE) OFFICE COMM. DEVICE?		DIRECT (RS232) MCM (RS232) MCM (ECHELON) SREAD SPEC (ECHELON) DIAL MODEM (RS232) S200 RADIO (RS422)
(FOR COLLECTOR USE) OFFICE PHONE NUMBER?		PHONE NUMBER OF WAMS
(FOR COLLECTOR USE) INIT STRING?		OPTIONAL HAYES MODEM INITIALIZATION STRING
FIELD COMM. DEVICE?		VHF COMM. (ECHELON) VHF COMM. (RS232) SPREAD SPEC (ECHELON) SPREAD SPEC (RS232)
USER PORT?	57600,8,N,1,N	BAUD,DATA BITS,PARITY, STOP BITS,FLOW CONTROL
AUX PORT?	9600,8,N,1,N	BAUD,DATA BITS,PARITY, STOP BITS,FLOW CONTROL

YOU WILL NOW SEE A MESSAGE "PLEASE WAIT COMPILING STAGE 1" CONTINUE TO NEXT PROGRAM MENU QUESTIONS.

NOTES:

1) ASSIGNED DTMF CODES:

ACTIVATE CROSSING (MAIN TRACK - 1T1)	36611#
DE-ACTIVATE CROSSING (MAIN TRACK - 1T1)	36610#
ACTIVATE CROSSING (SIDING TRACK - 1T2)	36621#
DE-ACTIVATE CROSSING (SIDING TRACK - 1T2)	36620#
ACTIVATE CROSSING (BEAN TRACK - 1T3)	36631#
DE-ACTIVATE CROSSING (BEAN TRACK - 1T3)	36630#
ACTIVATE CROSSING (MAINTENANCE)	36671#
DE-ACTIVATE CROSSING (MAINTENANCE)	36670#

2) ADDITIONAL OPTIONS: DUAL CROSSING, EXTERNAL ENTRANCE GATE CONTROLLERS.

STAGE 2

QUESTION	PROGRAM	SELECTION 1 (MINIMUM)	SELECTION 2 (MAXIMUM)	CONDITION FOR MENU DISPLAY
RESET NAMES / MODULES ?	NO	YES	NO	ALWAYS
CROSSING CONFIGURATION ?	NORMAL	NORMAL	SPLIT GATE (NOTE 2)	ALWAYS
AND1 USED AS XR?	YES	NO	YES	ALWAYS
AND2 USED AS XR?	NO	NO	YES	ALWAYS
AND3 USED AS XR?	NO	NO	YES	ALWAYS
AND4 USED AS XR?	NO	NO	YES	ALWAYS
AND5 USED AS XR?	NO	NO	YES	ALWAYS
AND6 USED AS XR?	NO	NO	YES	ALWAYS
AND7 USED AS XR?	NO	NO	YES	ALWAYS
AND8 USED AS XR?	NO	NO	YES	ALWAYS
XR CONTROLLED BY FOREIGN RR?	NO	AND1	AND8	CROSSING CONFIGURATION = SPIT GATE
ENTRANCE GATES ?	2	0	8	ALWAYS
GATE CONTROLLED BY FOREIGN RR?	NONE	NONE	TSS4	CROSSING CONFIGURATION = SPIT GATE
GATE DESCENT TIME (SECONDS)	11	7	20	GATES > 0
GATE POSITION FAIL TIME (SECONDS) ?	17	10	60	GATES > 0
BATTERY BANKS ?	2	1	3	ALWAYS
BATT MON USED ?	NO	NO	YES	ALWAYS
INTERNAL CROSSING CONTROLLERS ?	2	0	2	ALWAYS
EXTERNAL CROSSING CONTROLLERS ?	0	0	2	CROSSING CONTROLLER = YES
ALLOW DTMF CONTROL ?	YES	NO	YES	ALWAYS
COUNTRY	US	CANADA	US	ALLOW DTMF CONTROL = YES
DTMF CONTROL WITH PREMPTION ?	NO	NO	YES	ALLOW DTMF CONTROL = YES
POK ANNOUNCEMENT TO VHF ?	NO	NO	YES	ALLOW DTMF CONTROL = YES
VHF VOICE CHANNEL ?	1	1	8	ALLOW DTMF CONTROL = YES
VHF DATA CHANNEL ?	1	1	8	ALLOW DTMF CONTROL = YES
DIGIT #1 ?	3	0	9	ALLOW DTMF CONTROL = YES
DIGIT #2 ?	6	0	9	ALLOW DTMF CONTROL = YES
DIGIT #3 ?	6	0	9	ALLOW DTMF CONTROL = YES
DIGIT #4 ?	N/A	0	9	ALLOW DTMF CONTROL = YES
DIGIT #5 ?	N/A	0	9	ALLOW DTMF CONTROL = YES
TIME-OUT FOR DTMF REQUEST #1 ?	180	0	240	ALLOW DTMF CONTROL = YES
TIME-OUT FOR DTMF REQUEST #2 ?	180	0	240	ALLOW DTMF CONTROL = YES
TIME-OUT FOR DTMF REQUEST #3 ?	180	0	240	ALLOW DTMF CONTROL = YES
TIME-OUT FOR DTMF REQUEST #4 ?	0	0	240	ALLOW DTMF CONTROL = YES

STAGE 2 CONT'D

QUESTION	PROGRAM	SELECTION 1 (MINIMUM)	SELECTION 2 (MAXIMUM)	CONDITION FOR MENU DISPLAY
TIME-OUT FOR DTMF REQUEST #5 ?	0	0	240	ALLOW DTMF CONTROL = YES
TIME-OUT FOR DTMF REQUEST #6 ?	0	0	240	ALLOW DTMF CONTROL = YES
TIME-OUT FOR DTMF REQUEST #7 ?	180	0	240	ALLOW DTMF CONTROL = YES
ISLAND RELEASE DTMF REQUEST #1 ?	1	0	6	TIME-OUT FOR DTMF REQUEST #1 > 0
ISLAND RELEASE DTMF REQUEST #2 ?	2	0	6	TIME-OUT FOR DTMF REQUEST #2 > 0
ISLAND RELEASE DTMF REQUEST #3 ?	3	0	6	TIME-OUT FOR DTMF REQUEST #3 > 0
ISLAND RELEASE DTMF REQUEST #4 ?	0	0	6	TIME-OUT FOR DTMF REQUEST #4 > 0
ISLAND RELEASE DTMF REQUEST #5 ?	0	0	6	TIME-OUT FOR DTMF REQUEST #5 > 0
ISLAND RELEASE DTMF REQUEST #6 ?	0	0	6	TIME-OUT FOR DTMF REQUEST #6 > 0
ISLAND RELEASE DTMF REQUEST #7 ?	0	0	6	TIME-OUT FOR DTMF REQUEST #7 > 0
ILOD MODULES ?	2	0	4	ALWAYS
ANY LED BULBS USED ?	YES	NO	YES	ILOD MODULES > 0
AUTO INSPECTION ?	NO	YES	NO	ALWAYS
BELL SENSORS ?	1	0	8	ALWAYS
BELL SENSORS TSS1 ?	YES	NO	YES	BELL SENSORS > 0
BELL SENSORS TSS2 ?	NO	NO	YES	BELL SENSORS > 0
BELL SENSORS TSS3 ?	NO	NO	YES	BELL SENSORS > 0
BELL SENSORS TSS4 ?	NO	NO	YES	BELL SENSORS > 0
BELL SENSORS TSS5 ?	NO	NO	YES	BELL SENSORS > 0
BELL SENSORS TSS6 ?	NO	NO	YES	BELL SENSORS > 0
BELL SENSORS TSS7 ?	NO	NO	YES	BELL SENSORS > 0
BELL SENSORS TSS8 ?	NO	NO	YES	BELL SENSORS > 0
BELL ON ?	GATES LOWERING	GATES LOWERING		BELL SENSORS > 0
		GATES MOVING		
		ALWAYS		
BATTERY PERCENT FOR ALARM ?	85	0	100	ALWAYS
GFT'S ?	YES	YES	NO	ALWAYS
BATTERIES ON GFT1 ?	2	1	2	GFT'S = YES
GATE UP SOURCE ?	GP	TSS	GP	GATE > 0
GATE DOWN SOURCE ?	GD	TIP , TSS	GD	GATES > 0
USE CELL MODEM NON-CRITICAL FEATURE ?	NO	NO	YES	ALWAYS
FULL APPROACH MOVE ALARMS ?	ACTIVATE	ACTIVATE		ALWAYS
		DO NOT ACTIVATE		

YOU WILL NOW SEE A MESSAGE "PLEASE WAIT COMPILING STAGE 2" CONTINUE TO NEXT PROGRAM MENU QUESTIONS.

STAGE 3

PROGRAM MENU QUESTIONS	
EDIT DIGITAL INPUTS	NO
EDIT BATTERIES	NO
EDIT RELAYS	NO
EDIT TEST LEDS	NO
EDIT ILOD SENSORS	NO
EDIT VHF SETTINGS	NO
GCP4K ATCS SUBNODE?	16

SAVE CONFIGURATION

gil-110.71-05.dgn
10-FEB-2016

SII 05 NOV 2015

PROPOSED
DESIGN NO. 15-0260
RED-IN YELLOW-OUT

AS INSTALLED
DATE _____
BY _____
(PRINT NAME)

SEARIIi EXECUTIVE 9V725 REV.A01U, SEARIIi APPLICATION 9VC45 REV.A01A

PROPOSED D	PROPOSED M	PROPOSED Y	REVISIONS	D	C	COMPLETED D	COMPLETED M	COMPLETED Y	C

REGION SOUTHERN
SUB. GILMAN 349
CN

SIGNALS AND COMMUNICATIONS HOMEWOOD
05 NOVEMBER 2015
DES. NDH
CH. MRB

GCP 4000/SEAR IIi
SETUP & PROGRAM
GIBSON CITY, IL
IL RT 9

GIL-110.71-05

DOT#289 366P

SIEMENS INDUSTRY INC

DES.: NDH	DATE: 11/05/15	JOB NO.: PICA10600	
CKD.: MRB	ISSUE DATE: N/A	EST. NO.: XP-7988	
DRN.: NDH	PLAN NO.: N/A	SHEET 5 OF 18	
P TIME: 08:37	P DATE: $$PLOT_DATE	CAD ID.: GIL-110.71-05	

SIEMENS INDUSTRY INC
LOUISVILLE DIVISION, LOUISVILLE, KY

REVISIONS			
NO.	DATE	BY	DESCRIPTION	APP. BY
1				
2				
3				
4				
5				

GCP 4000 CALIBRATION HISTORY

INITIAL SET UP BY: _____ DATE: _____

		APPROACH DISTANCE CALIBRATION										LINEARIZATION CALIBRATION	
		EZ/EX VALUES (TRACK UNOCCUPIED)				HARD WIRE SHUNT AT TERMINATION SHUNT				COMPUTED APPROACH DISTANCE		LINEARIZATION STEP VALUE	
		EZ		EX		EZ		EX					
		NRML	STBY	NRML	STBY	NRML	STBY	NRML	STBY	NRML	STBY	NRML	STBY
NORTH	TRACK 1												
SOUTH	TRACK 1												
NORTH	TRACK 2												
SOUTH	TRACK 2												
NORTH	TRACK 3												
SOUTH	TRACK 3												

GCP 4000 CALIBRATION HISTORY

INITIAL SET UP BY: _____ DATE: _____

		APPROACH DISTANCE CALIBRATION										LINEARIZATION CALIBRATION	
		EZ/EX VALUES (TRACK UNOCCUPIED)				HARD WIRE SHUNT AT TERMINATION SHUNT				COMPUTED APPROACH DISTANCE		LINEARIZATION STEP VALUE	
		EZ		EX		EZ		EX					
		NRML	STBY	NRML	STBY	NRML	STBY	NRML	STBY	NRML	STBY	NRML	STBY
NORTH	TRACK 1												
SOUTH	TRACK 1												
NORTH	TRACK 2												
SOUTH	TRACK 2												
NORTH	TRACK 3												
SOUTH	TRACK 3												

GCP 4000 CALIBRATION HISTORY

INITIAL SET UP BY: _____ DATE: _____

		APPROACH DISTANCE CALIBRATION										LINEARIZATION CALIBRATION	
		EZ/EX VALUES (TRACK UNOCCUPIED)				HARD WIRE SHUNT AT TERMINATION SHUNT				COMPUTED APPROACH DISTANCE		LINEARIZATION STEP VALUE	
		EZ		EX		EZ		EX					
		NRML	STBY	NRML	STBY	NRML	STBY	NRML	STBY	NRML	STBY	NRML	STBY
NORTH	TRACK 1												
SOUTH	TRACK 1												
NORTH	TRACK 2												
SOUTH	TRACK 2												
NORTH	TRACK 3												
SOUTH	TRACK 3												

gil-110.71-06.dgn
10-FEB-2016

SII 05 NOV 2015

PROPOSED
DESIGN NO. 15-0260
RED-IN YELLOW-OUT

AS INSTALLED
DATE _____
BY _____
(PRINT NAME)

SIEMENS INDUSTRY INC			
DES.: NDH	DATE: 11/05/15	JOB NO.: PICA10600	
CKD.: MRB	ISSUE DATE: N/A	EST. NO.: XP-7988	
DRN.: NDH	PLAN NO.: N/A	SHEET 6 OF 18	
P. TIME: 08:38	P. DATE: $$PLOT_DATE	CAD ID.: GIL-110.71-06	

PROPOSED D	M	Y	REVISIONS	D	C	COMPLETED D	M	Y	C

REGION SOUTHERN
SUB. GILMAN 349

SIGNALS AND COMMUNICATIONS HOMEWOOD
DES. NDH
05 NOVEMBER 2015
CH. MRB

GCP 4000
CALIBRATION HISTORY
GIBSON CITY, IL
IL RT 9

GIL-110.71-06

DOT•289 366P

SIEMENS INDUSTRY INC
LOUISVILLE DIVISION, LOUISVILLE, KY

REVISIONS				
NO.	DATE	BY	DESCRIPTION	APP. BY
1				
2				
3				
4				
5				

gil-110.71-07.dgn
10-FEB-2016

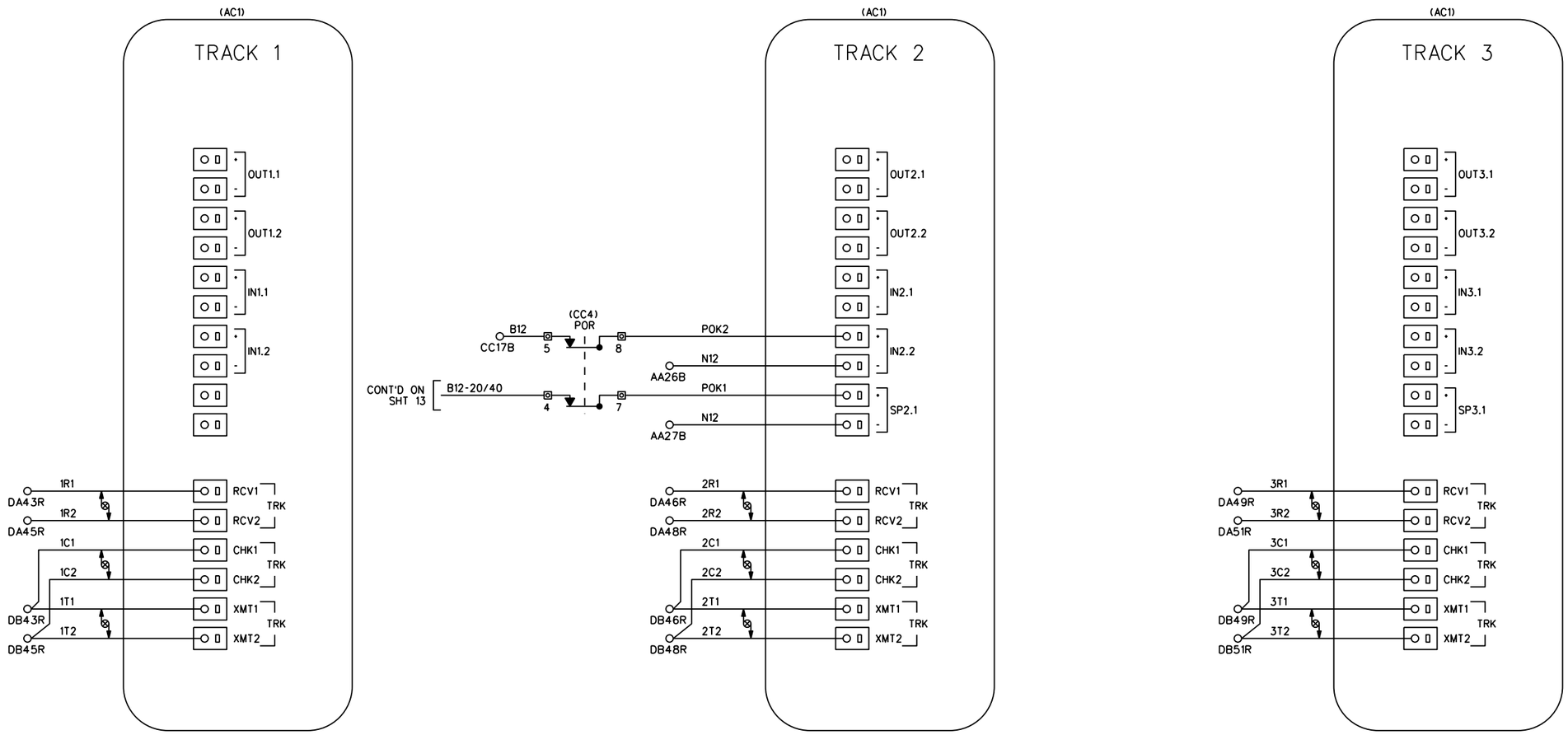

NOTES

1) ALL WIRING #16 AWG UNLESS OTHERWISE NOTED

DENOTES TWISTED PAIR

SII 05 NOV 2015

PROPOSED
DESIGN NO. 15-0260
RED-IN YELLOW-OUT

AS INSTALLED
DATE _____
BY _____
(PRINT NAME)

PROPOSED			REVISIONS	D	C	COMPLETED			C
D	M	Y				D	M	Y	

REGION SOUTHERN
SUB. GILMAN 349

SIGNALS AND COMMUNICATIONS HOMEWOOD
DES. NDH
05 NOVEMBER 2015
CH. MRB

GCP 4000
TRACK 1,2,&3 MODULE CONNECTIONS
GIBSON CITY, IL
IL RT 9

GIL-110.71-07

DOT#289 366P

SIEMENS INDUSTRY INC			
DES.: NDH	DATE: 11/05/15	JOB NO.: PICA10600	
CKD.: MRB	ISSUE DATE: N/A	EST. NO.: XP-7988	
DRN.: NDH	PLAN NO.: N/A	SHEET 7 OF 18	
P. TIME: 08:38	P. DATE: $$PLOT_DATE	CAD ID.: GIL-110.71-07	

SIEMENS INDUSTRY INC
LOUISVILLE DIVISION, LOUISVILLE, KY

REVISIONS				
NO.	DATE	BY	DESCRIPTION	APP. BY
1				
2				
3				
4				
5				

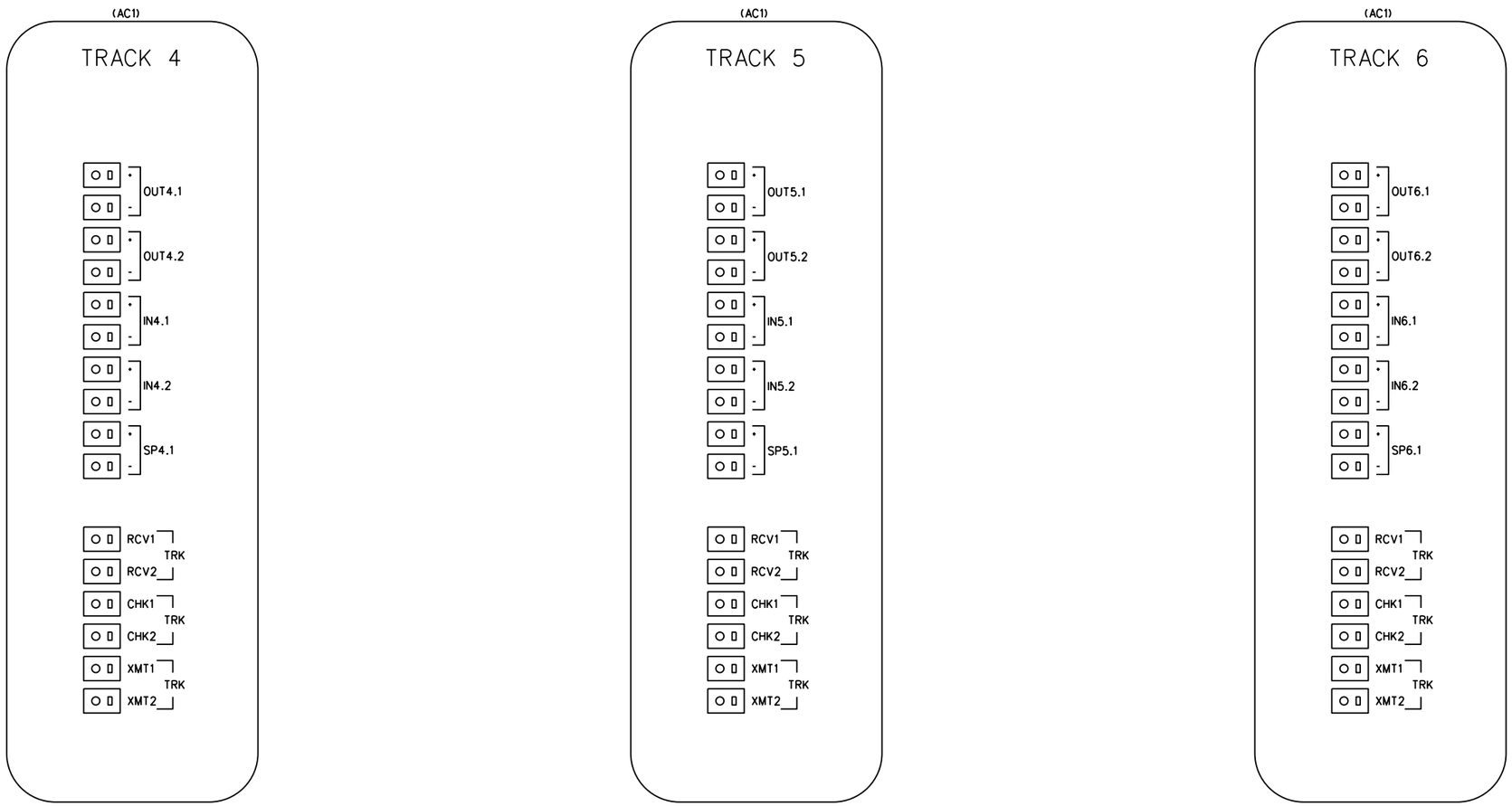

gil-110.71-08.dgn
10-FEB-2016

SIEMENS INDUSTRY INC		
DES.: NDH	DATE: 11/05/15	JOB NO.: PICA10600
CKD.: MRB	ISSUE DATE: N/A	EST. NO.: XP-7988
DRN.: NDH	PLAN NO.: N/A	SHEET 8 OF 18
P. TIME: 08:38	P. DATE: $$PLOT_DATE	CAD ID.: GIL-110.71-08

SII 05 NOV 2015

PROPOSED
DESIGN NO. 15-0260
RED-IN YELLOW-OUT

AS INSTALLED
DATE _____
BY _____
(PRINT NAME)

PROPOSED			REVISIONS	D	C	COMPLETED			C
D	M	Y				D	M	Y	

REGION SOUTHERN
SUB. GILMAN 349

SIGNALS AND COMMUNICATIONS HOMEWOOD
05 NOVEMBER 2015

DES. NDH
CH. MRB

GCP 4000
TRACK 4,5,&6 MODULE CONNECTIONS
GIBSON CITY, IL
IL RT 9

GIL-110.71-08

DOT•289 366P

SIEMENS INDUSTRY INC
LOUISVILLE DIVISION, LOUISVILLE, KY